BS EN IEC 61936-1:2021

Licensed copy: Sukanya Arayangkoon, The Electricity Generating Authority of, Version correct as of 22/03/2022



BSI Standards Publication

Power installations exceeding 1 kV AC and 1,5 kV DC

Part 1: AC

bsi.

Licensed copy: Sukanya Arayangkoon, The Electricity Generating Authority of, Version correct as of 22/03/2022

National foreword

This British Standard is the UK implementation of EN IEC 61936-1:2021. It is identical to IEC 61936-1:2021. It supersedes BS EN 61936-1:2010+A1:2014, which is withdrawn.

The UK participation in its preparation was entrusted to Technical Committee PEL/99, Erection and operation of power installations.

A list of organizations represented on this committee can be obtained on request to its committee manager.

Contractual and legal considerations

This publication has been prepared in good faith, however no representation, warranty, assurance or undertaking (express or implied) is or will be made, and no responsibility or liability is or will be accepted by BSI in relation to the adequacy, accuracy, completeness or reasonableness of this publication. All and any such responsibility and liability is expressly disclaimed to the full extent permitted by the law.

This publication is provided as is, and is to be used at the recipient's own risk.

The recipient is advised to consider seeking professional guidance with respect to its use of this publication.

This publication is not intended to constitute a contract. Users are responsible for its correct application.

© The British Standards Institution 2021
Published by BSI Standards Limited 2021

ISBN 978 0 539 03692 3

ICS 29.020; 29.080.01

Compliance with a British Standard cannot confer immunity from legal obligations.

This British Standard was published under the authority of the Standards Policy and Strategy Committee on 30 September 2021.

Amendments/corrigenda issued since publication

Date	Text affected

EUROPEAN STANDARD

NORME EUROPÉENNE

EUROPÄISCHE NORM

EN IEC 61936-1

August 2021

ICS 29.020; 29.080.01

Supersedes EN 61936-1:2010 and all of its amendments and corrigenda (if any)

English Version

Power installations exceeding 1 kV AC and 1,5 kV DC - Part 1: AC
(IEC 61936-1:2021)

Installations électriques de puissance de tension supérieure à 1 kV en courant alternatif et 1,5 kV en courant continu - Partie 1: Courant alternatif
(IEC 61936-1:2021)

Starkstromanlagen mit Nennwechselspannungen über 1 kV AC und 1,5 kV DC - Teil 1: Wechselstrom
(IEC 61936-1:2021)

This European Standard was approved by CENELEC on 2021-08-11. CENELEC members are bound to comply with the CEN/CENELEC Internal Regulations which stipulate the conditions for giving this European Standard the status of a national standard without any alteration.

Up-to-date lists and bibliographical references concerning such national standards may be obtained on application to the CEN-CENELEC Management Centre or to any CENELEC member.

This European Standard exists in three official versions (English, French, German). A version in any other language made by translation under the responsibility of a CENELEC member into its own language and notified to the CEN-CENELEC Management Centre has the same status as the official versions.

CENELEC members are the national electrotechnical committees of Austria, Belgium, Bulgaria, Croatia, Cyprus, the Czech Republic, Denmark, Estonia, Finland, France, Germany, Greece, Hungary, Iceland, Ireland, Italy, Latvia, Lithuania, Luxembourg, Malta, the Netherlands, Norway, Poland, Portugal, Republic of North Macedonia, Romania, Serbia, Slovakia, Slovenia, Spain, Sweden, Switzerland, Turkey and the United Kingdom.



European Committee for Electrotechnical Standardization
Comité Européen de Normalisation Electrotechnique
Europäisches Komitee für Elektrotechnische Normung

CEN-CENELEC Management Centre: Rue de la Science 23, B-1040 Brussels

© 2021 CENELEC All rights of exploitation in any form and by any means reserved worldwide for CENELEC Members.

Licensed copy: Sukanya Arayangkoon, The Electricity Generating Authority of, Version correct as of 22/03/2022

Licensed copy: Sukanya Arayangkoon, The Electricity Generating Authority of, Version correct as of 22/03/2022

European foreword

The text of document 99/311/FDIS, future edition 3 of IEC 61936-1, prepared by IEC/TC 99 “Insulation co-ordination and system engineering of high voltage electrical power installations above 1,0 kV AC and 1,5 kV DC” was submitted to the IEC-CENELEC parallel vote and approved by CENELEC as EN IEC 61936-1:2021.

The following dates are fixed:

- latest date by which the document has to be implemented at national level by publication of an identical national standard or by endorsement (dop) 2022–05–11
- latest date by which the national standards conflicting with the document have to be withdrawn (dow) 2024–08–11

This document supersedes EN 61936-1:2010 and all of its amendments and corrigenda (if any).

Attention is drawn to the possibility that some of the elements of this document may be the subject of patent rights. CENELEC shall not be held responsible for identifying any or all such patent rights.

Any feedback and questions on this document should be directed to the users’ national committee. A complete listing of these bodies can be found on the CENELEC website.

Endorsement notice

The text of the International Standard IEC 61936-1:2021 was approved by CENELEC as a European Standard without any modification.

In the official version, for Bibliography, the following notes have to be added for the standards indicated:

IEC 60034-3	NOTE	Harmonized as EN IEC 60034-3
IEC 60038	NOTE	Harmonized as EN 60038
IEC 60068 (series)	NOTE	Harmonized as EN 60068 (series)
IEC 60076-13	NOTE	Harmonized as EN 60076-13
IEC 60092 (series)	NOTE	Harmonized as EN 60092 (series)
IEC 60282-1	NOTE	Harmonized as EN IEC 60282-1
IEC 60364-4-41	NOTE	Harmonized as HD 60364-4-41
IEC 60364-7-729	NOTE	Harmonized as HD 60364-7-729
IEC 60376	NOTE	Harmonized as EN IEC 60376
IEC 60480	NOTE	Harmonized as EN IEC 60480
IEC 60664-1	NOTE	Harmonized as EN IEC 60664-1
IEC 60721 (series)	NOTE	Harmonized as EN 60721 (series)
IEC 60721-2-2	NOTE	Harmonized as EN 60721-2-2

IEC 60721-2-3	NOTE	Harmonized as EN 60721-2-3
IEC 60721-2-4	NOTE	Harmonized as EN IEC 60721-2-4
IEC 60721-2-7	NOTE	Harmonized as EN IEC 60721-2-7
IEC 60721-3-1	NOTE	Harmonized as EN IEC 60721-3-1
IEC 60721-3-2	NOTE	Harmonized as EN IEC 60721-3-2
IEC 60832 (series)	NOTE	Harmonized as EN 60832 (series)
IEC 60855-1	NOTE	Harmonized as EN 60855-1
IEC 60865-1	NOTE	Harmonized as EN 60865-1
IEC 60909 (series)	NOTE	Harmonized as EN 60909 (series)
IEC 61000 (series)	NOTE	Harmonized as EN IEC 61000 (series)
IEC 61039	NOTE	Harmonized as EN 61039
IEC 61082-1	NOTE	Harmonized as EN 61082-1
IEC 61243 (series)	NOTE	Harmonized as EN 61243 (series)
IEC 61355-1	NOTE	Harmonized as EN 61355-1
IEC 61869 (series)	NOTE	Harmonized as EN IEC 61869 (series)
IEC 62271-4	NOTE	Harmonized as EN 62271-4
IEC 62271-100	NOTE	Harmonized as EN 62271-100
IEC 62271-102	NOTE	Harmonized as EN IEC 62271-102
IEC 62271-103	NOTE	Harmonized as EN 62271-103
IEC 62271-104	NOTE	Harmonized as EN IEC 62271-104
IEC 62271-105	NOTE	Harmonized as EN 62271-105
IEC 62271-206	NOTE	Harmonized as EN 62271-206
IEC 62305 (series)	NOTE	Harmonized as EN 62305 (series)
IEC 81346 (series)	NOTE	Harmonized as EN IEC 81346 (series)
ISO 26800	NOTE	Harmonized as EN ISO 26800

Licensed copy: Sukanya Arayangkoon, The Electricity Generating Authority of, Version correct as of 22/03/2022

Licensed copy: Sukanya Arayangkoon, The Electricity Generating Authority of, Version correct as of 22/03/2022

Annex ZA
(normative)

Normative references to international publications with their corresponding European publications

The following documents are referred to in the text in such a way that some or all of their content constitutes requirements of this document. For dated references, only the edition cited applies. For undated references, the latest edition of the referenced document (including any amendments) applies.

NOTE 1 Where an International Publication has been modified by common modifications, indicated by (mod), the relevant EN/HD applies.

NOTE 2 Up-to-date information on the latest versions of the European Standards listed in this annex is available here: www.cenelec.eu.

Publication	Year	Title	EN/HD	Year
IEC 60034-1	-	Rotating electrical machines - Part 1: Rating and performance	-	-
IEC 60060-1	-	High-voltage test techniques - Part 1: General definitions and test requirements	EN 60060-1	-
IEC 60071-1	2019	Insulation co-ordination - Part 1: Definitions, principles and rules	EN IEC 60071-1	2019
IEC 60071-2	-	Insulation co-ordination – Part 2: Application guidelines	EN IEC 60071-2	-
IEC 60076	series	Power transformers	EN 60076	series
IEC 60079-0	-	Explosive atmospheres - Part 0: Equipment - General requirements	EN IEC 60079-0	-
IEC 60079-10-1	-	Explosive atmospheres - Part 10–1: Classification of areas - Explosive gas atmospheres	EN IEC 60079-10-1	-
IEC 60079-10-2		Explosive atmospheres - Part 10–2: Classification of areas - Explosive dust atmospheres	EN 60079-10-2	
IEC 60255	series	Measuring relays and protection equipment	EN 60255	series
IEC 60331-1	-	Tests for electric cables under fire conditions - Circuit integrity - Part 1: Test method for fire with shock at a temperature of at least 830 °C for cables of rated voltage up to and including 0,6/1,0 kV and with an overall diameter exceeding 20 mm	EN IEC 60331-1	-
IEC 60331-21	-	Tests for electric cables under fire conditions - Circuit integrity - Part 21: Procedures and requirements - Cables of rated voltage up to and including 0,6/1,0 kV	-	-
IEC 60332	series	Tests on electric cables under fire conditions	EN 60332	series

IEC 60364	series	Low-voltage electrical installations	HD 60364	series
IEC 60479-1	2018	Effects of current on human beings and livestock - Part 1: General aspects	-	-
IEC 60529	-	Degrees of protection provided by enclosures (IP Code)	-	-
IEC 60754	series	Test on gases evolved during combustion of materials from cables	EN 60754	series
IEC 61034-1	-	Measurement of smoke density of cables burning under defined conditions - Part 1: Test apparatus	EN 61034-1	-
IEC 61219	-	Live working - Earthing or earthing and short-circuiting equipment using lances as a short-circuiting device - Lance earthing	EN 61219	-
IEC 61230	-	Live working - Portable equipment for earthing or earthing and short-circuiting	EN 61230	-
IEC 62271-1	2017	High-voltage switchgear and controlgear - Part 1: Common specifications for alternating current switchgear and controlgear	EN 62271-1	2017
IEC 62271-200	-	High-voltage switchgear and controlgear - Part 200: AC metal-enclosed switchgear and controlgear for rated voltages above 1 kV and up to and including 52 kV	EN IEC 62271-200	-
IEC 62271-201	-	High-voltage switchgear and controlgear - Part 201: AC solid-insulation enclosed switchgear and controlgear for rated voltages above 1 kV and up to and including 52 kV	EN 62271-201	-
IEC 62271-202	-	High-voltage switchgear and controlgear - Part 202: High-voltage/ low-voltage prefabricated substation	EN 62271-202	-
IEC 62271-203	-	High-voltage switchgear and controlgear - Part 203: Gas-insulated metal-enclosed switchgear for rated voltages above 52 kV	EN 62271-203	-
IEC 62271-207	-	High-voltage switchgear and controlgear - Part 207: Seismic qualification for gas-insulated switchgear assemblies for rated voltages above 52 kV	EN 62271-207	-
IEC 62305	series	Protection against lightning	EN 62305	series
IEC/TR 61000-5-2	-	Electromagnetic compatibility (EMC) - Part 5: Installation and mitigation guidelines - Section 2: Earthing and cabling	-	-
IEC/TR 62271-300	-	High-voltage switchgear and controlgear - Part 300: Seismic qualification of alternating current circuit-breakers	-	-
IEC/TS 60815-1	-	Selection and dimensioning of high-voltage insulators intended for use in polluted conditions - Part 1: Definitions, information and general principles	-	-

Licensed copy: Sukanya Arayangkoon, The Electricity Generating Authority of, Version correct as of 22/03/2022

IEC/TS 60815-2	-	Selection and dimensioning of high-voltage insulators intended for use in polluted conditions - Part 2: Ceramic and glass insulators for a.c. systems	-	-
IEC/TS 60815-3	-	Selection and dimensioning of high-voltage insulators intended for use in polluted conditions - Part 3: Polymer insulators for a.c. systems	-	-
IEC/TS 61463	-	Bushings - Seismic qualification	-	-
IEC/IEEE 82079-1	-	Preparation of information for use (instructions for use) of products - Part 1: Principles and general requirements	EN IEC/IEEE 82079-1	-

Licensed copy: Sukanya Arayangkoon, The Electricity Generating Authority of, Version correct as of 22/03/2022

Licensed copy: Sukanya Arayangkoon, The Electricity Generating Authority of, Version correct as of 22/03/2022

CONTENTS

FOREWORD 8
INTRODUCTION 11
1 Scope 12
2 Normative references 13
3 Terms and definitions 15
3.1 General definitions 15
3.2 Definitions concerning electrical power installations 17
3.3 Definitions concerning types of electrical power installations 18
3.4 Definitions concerning safety measures against electric shock 18
3.5 Definitions concerning clearances 19
3.6 Definitions concerning control and protection 21
3.7 Definitions concerning earthing 21
4 Fundamental requirements 25
4.1 General 25
4.1.1 General requirements 25
4.1.2 Agreements between supplier and user 26
4.2 Electrical requirements 28
4.2.1 Methods of neutral earthing 28
4.2.2 Voltage classification 28
4.2.3 Current in normal operation 28
4.2.4 Short-circuit current 28
4.2.5 Rated frequency 29
4.2.6 Corona 29
4.2.7 Electric and magnetic fields 29
4.2.8 Overvoltages 30
4.2.9 Harmonics 30
4.2.10 Electromagnetic compatibility 30
4.3 Mechanical requirements 30
4.3.1 General 30
4.3.2 Tension load 31
4.3.3 Erection load 31
4.3.4 Ice load 31
4.3.5 Wind load 31
4.3.6 Switching forces 31
4.3.7 Short-circuit forces 31
4.3.8 Loss of conductor tension 31
4.3.9 Seismic loads 31
4.3.10 Dimensioning of structures 32
4.4 Climatic and environmental conditions 32
4.4.1 General 32
4.4.2 Normal conditions 32
4.4.3 Special conditions 34
4.5 Particular requirements 35
4.5.1 Effects of small animals and micro-organisms 35
4.5.2 Noise level 35
4.5.3 Transport 35

5 Insulation 35
5.1 General 35
5.2 Selection of insulation level 36
5.2.1 General 36
5.2.2 Consideration of methods of neutral earthing 36
5.2.3 Consideration of rated withstand voltages 36
5.3 Verification of withstand values 36
5.4 Minimum clearances of live parts 37
5.4.1 General 37
5.4.2 Minimum clearances in voltage range I 37
5.4.3 Minimum clearances in voltage range II 37
5.5 Minimum clearances between parts under special conditions 40
5.6 Tested connection zones 40
6 Electrical equipment 40
6.1 General requirements 40
6.1.1 Electrical equipment safety 40
6.1.2 User safety 40
6.2 Specific requirements 41
6.2.1 Switching devices 41
6.2.2 Power transformers and reactors 41
6.2.3 Prefabricated type-tested switchgear 42
6.2.4 Instrument transformers 42
6.2.5 Surge arresters 43
6.2.6 Capacitors 43
6.2.7 Line traps 44
6.2.8 Insulators 44
6.2.9 Insulated cables 44
6.2.10 Conductors and accessories 47
6.2.11 Rotating electrical machines 47
6.2.12 Generating units 48
6.2.13 Generating unit main connections 48
6.2.14 Static converters 48
6.2.15 Fuses 49
6.2.16 Electrical and mechanical interlocking 49
7 Electrical power installations 49
7.1 General 49
7.1.1 Common requirements 49
7.1.2 Circuit arrangement 50
7.1.3 Documentation 51
7.1.4 Transport routes 51
7.1.5 Aisles and access areas 52
7.1.6 Lighting 53
7.1.7 Operational safety 53
7.1.8 Labelling 53
7.2 Outdoor electrical power installations of open design 53
7.2.1 General 53
7.2.2 Protective barrier clearances 54
7.2.3 Protective obstacle clearances 54
7.2.4 Boundary clearances 55

Licensed copy: Sukanya Arayangkoon, The Electricity Generating Authority of, Version correct as of 22/03/2022

Licensed copy: Sukanya Arayangkoon, The Electricity Generating Authority of, Version correct as of 22/03/2022

7.2.5 Minimum height over access area 56
7.2.6 Clearances to buildings 57
7.2.7 External fences or walls and access doors 59
7.3 Indoor electrical power installations of open design 59
7.4 Installation of prefabricated type-tested switchgear 60
7.4.1 General 60
7.4.2 Additional requirements for gas-insulated metal-enclosed switchgear 60
7.5 Requirements for buildings 62
7.5.1 General 62
7.5.2 Structural provisions 62
7.5.3 Rooms for switchgear 63
7.5.4 Maintenance and operating areas 63
7.5.5 Doors 63
7.5.6 Draining of insulating liquids 64
7.5.7 Heating, ventilation and air conditioning (HVAC) 64
7.5.8 Buildings which require special consideration 65
7.6 High voltage/low voltage prefabricated substations 65
7.7 Electrical power installations on mast, pole and tower 65
8 Safety measures 65
8.1 General 65
8.2 Protection against direct contact 66
8.2.1 General 66
8.2.2 Measures for protection against direct contact 66
8.2.3 Protection requirements 67
8.3 Means to protect persons in case of indirect contact 68
8.4 Means to protect persons working on or near electrical power installations 68
8.4.1 General 68
8.4.2 Electrical equipment for isolating installations or apparatus 68
8.4.3 Devices to prevent reclosing of isolating devices 69
8.4.4 Devices for determining the de-energized state 69
8.4.5 Devices for earthing and short-circuiting 69
8.4.6 Equipment acting as protective barriers against adjacent live parts 70
8.4.7 Storage of personal protection equipment 71
8.5 Protection from danger resulting from arc fault 71
8.6 Protection against direct lightning strokes 71
8.7 Protection against fire 72
8.7.1 General 72
8.7.2 Transformers, reactors 73
8.7.3 Cables 79
8.7.4 Other equipment with flammable liquid 79
8.8 Protection against leakage of insulating liquid and SF_6 80
8.8.1 Insulating liquid leakage and subsoil water protection 80
8.8.2 SF_6 leakage 82
8.8.3 Failure with loss of SF_6 and its decomposition products 83
8.9 Identification and marking 83
8.9.1 General 83
8.9.2 Information plates and warning plates 84
8.9.3 Electrical hazard warning 84

Licensed copy: Sukanya Arayangkoon, The Electricity Generating Authority of, Version correct as of 22/03/2022

8.9.4 Electrical power installations with incorporated capacitors 84
8.9.5 Emergency signs for emergency exits 84
8.9.6 Cable identification marks 84
9 Protection, automation and auxiliary systems 84
9.1 Protection systems 84
9.2 Automation systems 85
9.3 Auxiliary systems 86
9.3.1 AC and DC supply circuits 86
9.3.2 Compressed air systems 87
9.3.3 SF_6 gas handling plants 88
9.3.4 Hydrogen handling plants 88
9.4 Basic rules for electromagnetic compatibility of control systems 88
9.4.1 General 88
9.4.2 Electrical noise sources in electrical power installations 89
9.4.3 Measures to be taken to reduce the effects of high frequency interference 89
9.4.4 Measures to be taken to reduce the effects of low frequency interference 89
9.4.5 Measures related to the selection of electrical equipment 90
9.4.6 Other possible measures to reduce the effects of interference 91
10 Earthing systems 91
10.1 General 91
10.2 Fundamental requirements 91
10.2.1 Safety criteria 91
10.2.2 Functional requirements 92
10.2.3 High and low voltage earthing systems 92
10.3 Design of earthing systems 93
10.3.1 General 93
10.3.2 Power system faults 94
10.3.3 Lightning and transient overvoltages 94
10.4 Construction work on earthing systems 95
10.5 Measurements 95
10.6 Maintainability 95
10.6.1 Inspections 95
10.6.2 Measurements 95
11 Inspection and testing 96
11.1 General 96
11.2 Verification of specified performances 96
11.3 Tests during installation and commissioning 97
11.4 Trial running 97
12 Operation and maintenance manual 97
Annex A (informative) Values of rated insulation levels and minimum clearances based on current practice in some countries 98
Annex B (normative) Method of calculating permissible touch voltages 101
Annex C (normative) Permissible touch voltage according to IEEE 80 102
Annex D (normative) Earthing system design flow chart 103

Licensed copy: Sukanya Arayangkoon, The Electricity Generating Authority of, Version correct as of 22/03/2022

Annex E (informative) Protection measures against direct lightning strokes 104
E.1 General 104
E.2 Shield wires 104
E.3 Lightning rods 104
Annex F (informative) Considerations of design for safe working 107
Annex G (informative) List of notes concerning particular conditions in certain countries 109
Bibliography 115

Figure 1 – Minimum approach distance for transport within closed electrical operating areas 52
Figure 2 – Protection against direct contact by protective barriers or protective obstacles within closed electrical operating areas 55
Figure 3 – Boundary distances and minimum height at the external fence/wall 56
Figure 4 – Minimum heights within closed electrical operating areas 57
Figure 5 – Approaches with buildings within closed electrical operating areas 58
Figure 6 – Separating walls between transformers 75
Figure 7 – Fire protection between transformer and building 77
Figure 8 – Example for small transformers without gravel layer and catchment tank 80
Figure 9 – Sump with integrated catchment tank 81
Figure 10 – Sump with separate catchment tank 82
Figure 11 – Sump with integrated common catchment tank 82
Figure 12 – Permissible touch voltage U_{Tp} 95
Figure C.1 – Permissible touch voltage U_{Tp} according to IEEE 80 102
Figure E.1 – Single shield wire 105
Figure E.2 – Two shield wires 105
Figure E.3 – Single lightning rod 106
Figure E.4 – Two lightning rods 106
Figure F.1 – Working clearances within closed electrical operating areas 108

Table 1 – References to subclauses where agreement between supplier and user is required 27
Table 2 – Minimum clearances in air – Voltage range I (1 kV < U_m ≤ 245 kV) 38
Table 3 – Minimum clearances in air – Voltage range II (U_m > 245 kV) 39
Table 4 – Guide values for outdoor transformer clearances 74
Table 5 – Minimum requirements for the installation of indoor transformers 78
Table 6 – Minimum requirements for interconnection of low-voltage and high-voltage earthing systems based on EPR limits 93
Table A.1 – Values of rated insulation levels and minimum clearances in air for 1 kV < U_m ≤ 245 kV for highest voltage for installation U_m not standardized by the IEC based on current practice in some countries 98
Table A.2 – Values of rated insulation levels and minimum clearances in air for 1 kV < U_m ≤ 245 kV for highest voltage for installation U_m not standardized by the IEC based on current practice in some countries 99

Table A.3 – Values of rated insulation levels and minimum clearances in air for U_m > 245 kV for highest voltages for installation U_m not standardized by the IEC based on current practice in some countries 100

Licensed copy: Sukanya Arayangkoon, The Electricity Generating Authority of, Version correct as of 22/03/2022

INTERNATIONAL ELECTROTECHNICAL COMMISSION

_____

POWER INSTALLATIONS EXCEEDING 1 kV AC AND 1,5 kV DC –

Part 1: AC

FOREWORD

1) The International Electrotechnical Commission (IEC) is a worldwide organization for standardization comprising all national electrotechnical committees (IEC National Committees). The object of IEC is to promote international co-operation on all questions concerning standardization in the electrical and electronic fields. To this end and in addition to other activities, IEC publishes International Standards, Technical Specifications, Technical Reports, Publicly Available Specifications (PAS) and Guides (hereafter referred to as "IEC Publication(s)"). Their preparation is entrusted to technical committees; any IEC National Committee interested in the subject dealt with may participate in this preparatory work. International, governmental and non-governmental organizations liaising with the IEC also participate in this preparation. IEC collaborates closely with the International Organization for Standardization (ISO) in accordance with conditions determined by agreement between the two organizations.
2) The formal decisions or agreements of IEC on technical matters express, as nearly as possible, an international consensus of opinion on the relevant subjects since each technical committee has representation from all interested IEC National Committees.
3) IEC Publications have the form of recommendations for international use and are accepted by IEC National Committees in that sense. While all reasonable efforts are made to ensure that the technical content of IEC Publications is accurate, IEC cannot be held responsible for the way in which they are used or for any misinterpretation by any end user.
4) In order to promote international uniformity, IEC National Committees undertake to apply IEC Publications transparently to the maximum extent possible in their national and regional publications. Any divergence between any IEC Publication and the corresponding national or regional publication shall be clearly indicated in the latter.
5) IEC itself does not provide any attestation of conformity. Independent certification bodies provide conformity assessment services and, in some areas, access to IEC marks of conformity. IEC is not responsible for any services carried out by independent certification bodies.
6) All users should ensure that they have the latest edition of this publication.
7) No liability shall attach to IEC or its directors, employees, servants or agents including individual experts and members of its technical committees and IEC National Committees for any personal injury, property damage or other damage of any nature whatsoever, whether direct or indirect, or for costs (including legal fees) and expenses arising out of the publication, use of, or reliance upon, this IEC Publication or any other IEC Publications.
8) Attention is drawn to the Normative references cited in this publication. Use of the referenced publications is indispensable for the correct application of this publication.
9) Attention is drawn to the possibility that some of the elements of this IEC Publication may be the subject of patent rights. IEC shall not be held responsible for identifying any or all such patent rights.

International Standard IEC 61936-1 has been prepared by IEC technical committee 99: Insulation co-ordination and system engineering of high voltage electrical power installations above 1,0 kV AC and 1,5 kV DC.

This third edition cancels and replaces the second edition published in 2010 and Amendment 1:2014. This edition constitutes a technical revision.

This edition includes the following significant technical changes with respect to the previous edition:

a) introduction has been rewritten to reflect the status when this document is produced;
b) the scope has been improved to clarify the application of this document;
c) missing and obsolete terms and definitions have been updated including improvement of existing terms;
d) Table 1 has been updated where agreements between supplier and user are needed;
e) requirements of electromagnetic compatibility have been clarified;

Licensed copy: Sukanya Arayangkoon, The Electricity Generating Authority of, Version correct as of 22/03/2022

f) insulation coordination clause (Clause 5) has improved wording for better clarity and the technical content has an updated coordination to the latest versions of the insulation coordination standards;

g) wording regarding electrical equipment has been improved and made clearer;

h) subclause for fuses has been improved and reworded;

i) requirements have been added for labelling when multiple sources are required to be disconnected;

j) missing requirements for GIS have been reintroduced;

k) subclause regarding ventilation (HVAC) has been improved;

l) figures in Clause 7 have been updated and moved to the corresponding subclause;

m) requirements for transformer installations have been improved including adjustment of editorial typing-errors;

n) clause on protection, automation and auxiliary systems has been restructured and improved;

o) protection against lightning strokes has been extended;

p) clarification of content due to the distinction between erection (and providing electrical safety for the intended use of the electrical power installation) and subsequent activities such as maintenance and repair with safe working procedures;

q) where no provincial, national or regional regulations are available for safe working procedures, an informative guideline is provided in Annex F. This replaces the former parts of Figure 3 in Clause 7.

The text of this International Standard is based on the following documents:

FDIS	Report on voting
99/311/FDIS	99/316/RVD

Full information on the voting for its approval can be found in the report on voting indicated in the above table.

The language used for the development of this International Standard is English.

This document was drafted in accordance with ISO/IEC Directives, Part 2, and developed in accordance with ISO/IEC Directives, Part 1 and ISO/IEC Directives, IEC Supplement, available at www.iec.ch/members_experts/refdocs. The main document types developed by IEC are described in greater detail at www.iec.ch/standardsdev/publications.

A list of all parts in the IEC 61936 series, published under the general title *Power installations exceeding 1 kV AC and 1,5 kV DC*, can be found on the IEC website.

A document on principles to be observed in the preparation of safety publications regarding high voltage installations is currently under development (IEC TS 61936-0).

Licensed copy: Sukanya Arayangkoon, The Electricity Generating Authority of, Version correct as of 22/03/2022

The committee has decided that the contents of this document will remain unchanged until the stability date indicated on the IEC website under webstore.iec.ch in the data related to the specific document. At this date, the document will be

- reconfirmed,
- withdrawn,
- replaced by a revised edition, or
- amended.

The reader's attention is drawn to the fact that Annex G lists all of the "in-some-country" clauses on differing practices of a less permanent nature relating to the subject of this document.

IMPORTANT – The 'colour inside' logo on the cover page of this publication indicates that it contains colours which are considered to be useful for the correct understanding of its contents. Users should therefore print this document using a colour printer.

Licensed copy: Sukanya Arayangkoon, The Electricity Generating Authority of, Version correct as of 22/03/2022

INTRODUCTION

This part of IEC 61936 contains the minimum requirements for the design, erection, and verification of high voltage power installations greater than 1 kV AC. The rules are intended to provide for the safety of persons, livestock and property against dangers and damage which may arise in the reasonable use of such electrical installations and to provide for the proper functioning of those installations.

There are many provincial, national and regional laws, standards and internal rules dealing with the matter coming within the scope of this document regarding high voltage power installations. These practices have been taken as a basis for this work.

This third edition of IEC 61936-1, first published in 2001, follows worldwide feedback to improve clarity. It continues the effort to towards the alignment all over the world of practices concerning the design and erection of high voltage power installations.

Particular requirements for transmission and distribution installations, as well as particular requirements for power generation and industrial installations, are included in this document.

While national standards and regulations take precedence, jurisdictions may elect to adopt the requirements of this document.

Licensed copy: Sukanya Arayangkoon, The Electricity Generating Authority of, Version correct as of 22/03/2022

POWER INSTALLATIONS EXCEEDING 1 kV AC AND 1,5 kV DC –

Part 1: AC

1 Scope

This part of IEC 61936 provides requirements for the design and the erection of electrical power installations in systems with nominal voltages exceeding 1 kV AC and nominal frequency up to and including 60 Hz, so as to provide safety and proper functioning for the use intended.

For the purpose of interpreting this document, an electrical power installation is considered to be one of the following:

a) substation, including substation for railway power supply;

b) electrical power installations on mast, pole and tower, switchgear and/or transformers located outside a closed electrical operating area;

c) one (or more) power station(s) located on a single site, the electrical power installation includes generators and transformers with all associated switchgear and all electrical auxiliary systems. Connections between generating stations located on different sites are excluded;

d) the electrical system of a factory, industrial plant or other industrial, agricultural, commercial or public premises;

e) electrical power installations on offshore facilities for the purpose of generation, transmission, distribution and/or storage of electricity;

f) transition towers/poles (between overhead lines and underground lines).

The electrical power installation includes, among others, the following equipment:

– rotating electrical machines;
– switchgear;
– transformers and reactors;
– converters;
– cables;
– wiring systems;
– batteries;
– capacitors;
– earthing systems;
– buildings and fences which are part of a closed electrical operating area;
– associated protection, control and auxiliary systems;
– large air core reactor.

NOTE 1 In general, equipment standards take precedence over the requirements of this document.

This document does not apply to the design and erection of any of the following:

– overhead and underground lines between separate electrical power installations;
– electrified railway tracks and rolling stock;
– mining equipment and installations;

Licensed copy: Sukanya Arayangkoon, The Electricity Generating Authority of, Version correct as of 22/03/2022

Licensed copy: Sukanya Arayangkoon, The Electricity Generating Authority of, Version correct as of 22/03/2022

– fluorescent lamp installations;
– installations on ships according to IEC 60092 (all parts) and offshore units according to IEC 61892 (all parts), which are used in the offshore petroleum industry for drilling, processing and storage purposes;
– electrostatic equipment (e.g. electrostatic precipitators, spray-painting units);
– test sites;
– medical equipment, e.g. medical X-ray equipment.

This document does not apply to the design of prefabricated, type-tested switchgear and high voltage/low voltage prefabricated substation, for which separate IEC standards exist.

NOTE 2 The scope of this document does not include the requirements for carrying out live working on electrical power installations.

NOTE 3 The scope of this document considers safety requirements for HV installations and the influences of HV installations on LV installations. For electrical installations up to 1 kV, IEC 60364 (all parts) applies.

2 Normative references

The following documents are referred to in the text in such a way that some or all of their content constitutes requirements of this document. For dated references, only the edition cited applies. For undated references, the latest edition of the referenced document (including any amendments) applies.

IEC 60034-1, *Rotating electrical machines – Part 1: Rating and performance*

IEC 60060-1, *High-voltage test techniques – Part 1: General definitions and test requirements*

IEC 60071-1:2019, *Insulation co-ordination – Part 1: Definitions, principles and rules*

IEC 60071-2, *Insulation co-ordination – Part 2: Application guidelines*

IEC 60076 (all parts), *Power transformers*

IEC 60079-0, *Explosive atmospheres – Part 0: Equipment – General requirements*

IEC 60079-10-1, *Explosive atmospheres – Part 10-1: Classification of areas – Explosive gas atmospheres*

IEC 60079-10-2, *Explosive atmospheres – Part 10-2: Classification of areas – Explosive dust atmospheres*

IEC 60255 (all parts), *Measuring relays and protection equipment*

IEC 60331-1, *Tests for electric cables under fire conditions – Circuit integrity – Part 1: Test method for fire with shock at a temperature of at least 830 °C for cables of rated voltage up to and including 0,6/1,0 kV and with an overall diameter exceeding 20 mm*

IEC 60331-21, *Tests for electric cables under fire conditions – Circuit integrity – Part 21: Procedures and requirements – Cables of rated voltage up to and including 0,6/1,0 kV*

IEC 60332 (all parts), *Tests on electric and optical fibre cables under fire conditions*

IEC 60364 (all parts), *Low-voltage electrical installations*

IEC 60479-1:2018, *Effects of current on human beings and livestock – Part 1: General aspects*

IEC 60529, *Degrees of protection provided by enclosures (IP Code)*

IEC 60754 (all parts), *Test on gases evolved during combustion of materials from cables*

IEC TS 60815-1, *Selection and dimensioning of high-voltage insulators intended for use in polluted conditions – Part 1: Definitions, information and general principles*

IEC TS 60815-2, *Selection and dimensioning of high-voltage insulators intended for use in polluted conditions – Part 2: Ceramic and glass insulators for a.c. systems*

IEC TS 60815-3, *Selection and dimensioning of high-voltage insulators intended for use in polluted conditions – Part 3: Polymer insulators for a.c. systems*

IEC TR 61000-5-2, *Electromagnetic compatibility (EMC) – Part 5: Installation and mitigation guidelines – Section 2: Earthing and cabling*

IEC 61034-1, *Measurement of smoke density of cables burning under defined conditions – Part 1: Test apparatus*

IEC 61219, *Live working – Earthing or earthing and short-circuiting equipment using lances as a short-circuiting device – Lance earthing*

IEC 61230, *Live working – Portable equipment for earthing or earthing and short-circuiting*

IEC TS 61463, *Bushings – Seismic qualification*

IEC 62271-1:2017, *High-voltage switchgear and controlgear – Part 1: Common specifications for alternating current switchgear and controlgear*

IEC 62271-200, *High-voltage switchgear and controlgear – Part 200: AC metal-enclosed switchgear and controlgear for rated voltages above 1 kV and up to and including 52 kV*

IEC 62271-201, *High-voltage switchgear and controlgear – Part 201: AC solid-insulation enclosed switchgear and controlgear for rated voltages above 1 kV and up to and including 52 kV*

IEC 62271-202, *High-voltage switchgear and controlgear – Part 202: High-voltage/low-voltage prefabricated substation*

IEC 62271-203, *High-voltage switchgear and controlgear – Part 203: Gas-insulated metal-enclosed switchgear for rated voltages above 52 kV*

IEC 62271-207, *High-voltage switchgear and controlgear – Part 207: Seismic qualification for gas-insulated switchgear assemblies for rated voltages above 52 kV*

IEC TR 62271-300, *High-voltage switchgear and controlgear – Part 300: Seismic qualification of alternating current circuit-breakers*

IEC 62305 (all parts), *Protection against lightning*

IEC/IEEE 82079-1, *Preparation of information for use (instructions for use) of products – Part 1: Principles and general requirements*

Licensed copy: Sukanya Arayangkoon, The Electricity Generating Authority of, Version correct as of 22/03/2022

Licensed copy: Sukanya Arayangkoon, The Electricity Generating Authority of, Version correct as of 22/03/2022

3 Terms and definitions

For the purposes of this document, the following terms and definitions apply.

ISO and IEC maintain terminological databases for use in standardization at the following addresses:

- IEC Electropedia: available at http://www.electropedia.org/
- ISO Online browsing platform: available at http://www.iso.org/obp

3.1 General definitions

3.1.1
electrical equipment
item used for such purposes as generation, conversion, transmission, distribution or utilization of electric energy, such as electric machines, transformers, switchgear and controlgear, measuring instruments, protective devices, wiring systems, current-using equipment

[SOURCE: IEC 60050-826:2004, 826-16-01, modified – In the term, "electric" has been replaced by "electrical".]

3.1.2
nominal value
value of a quantity used to designate and identify a component, device, equipment or system

[SOURCE: IEC 60050-151:2001, 151-16-09, modified – The note has been removed.]

3.1.3
rated value
value of a quantity used for specification purposes, established for a specified set of operating conditions of a component, device, equipment, or system

[SOURCE: IEC 60050-151:2001, 151-16-08]

3.1.4
highest voltage for installation
U_m
highest RMS value of phase-to-phase voltage for which the installation is designed in respect of its insulation

Note 1 to entry: For the purpose of this document, "highest voltage for installation U_m" is equal to "highest voltage for equipment U_m" according to IEC 60071-1.

3.1.5
tested connection zone
zone in the vicinity of equipment terminals which has passed a dielectric type test with the appropriate withstand value(s), the applicable conductors being connected to the terminals in a manner specified by the manufacturer of the equipment

3.1.6
isolating distance
<of a pole of a mechanical switching device> clearance between open contacts meeting the safety requirements specified for disconnectors

[SOURCE: IEC 60050-441:2000, 441-17-35]

Licensed copy: Sukanya Arayangkoon, The Electricity Generating Authority of, Version correct as of 22/03/2022

3.1.7
isolation
switching off or disconnection of an electrical power installation, a part of an electrical power installation or an equipment from all non-earthed conductors by creating isolating gaps or distances

3.1.8
live part
conductor or conductive part intended to be energized in normal operation, including the isolated neutral point

Note 1 to entry: This concept does not necessarily imply a risk of electric shock.

[SOURCE: IEC 60050-195:2021, 195-02-19, modified – "conductor or " has been added at the start of the definition. "neutral conductor and mid-point conductor" has been replaced with "isolated neutral point". LV terms and relation not included.]

3.1.9
feeder
electric line originating at a main substation and supplying one or more secondary substations, or one or more branch lines, or any combination of these two types of installations

[SOURCE: IEC 60050-601:1985, 601-02-08, modified – Branch lines included and the combination of those installations]

3.1.10
ferro-resonance
resonance due to oscillations between the capacitance of an apparatus and the inductance of the saturable magnetic circuit of an adjacent apparatus

[SOURCE: IEC 60050-614:2016, 614-01-19]

3.1.11
transient overvoltage
overvoltage with a duration of a few milliseconds or less, oscillatory or non-oscillatory, usually highly damped

[SOURCE: IEC 60050-614:2016, 614-03-14, modified – The notes to entry have been deleted.]

3.1.12
temporary overvoltage
TOV
power-frequency overvoltage of a relatively long duration

Note 1 to entry: The overvoltage may be undamped or weakly damped. In some cases, its frequency may be several times smaller or higher than power frequency.

[SOURCE: IEC 60071-1:2019, 3.17.1]

3.1.13
high voltage
HV
voltage exceeding 1 000 V AC

[SOURCE: IEC 60050-601:1985, 601-01-27, modified – Fixed limit HV > 1 000 V and synonym to preferred term moved to new line.]

3.1.14
low voltage
LV
voltage not exceeding 1 000 V AC

[SOURCE: IEC 60050-601:1985, 601-01-26, modified – Fixed limit LV ≤ 1 000 V and synonym to preferred term moved to new line.]

3.1.15
operation
all activities, including both electrical and non-electrical work activities, necessary to permit the electric power installation to function

Note 1 to entry: These activities include switching, controlling, monitoring and maintenance.

[SOURCE: IEC 60050-151:2001, 151-11-28, modified – Enlarged extent related to electric power installations.]

3.1.16
normal conditions of operation
all operating conditions frequently encountered

Note 1 to entry: These include rated operating conditions, maximum and minimum operating conditions, partial load, normal transients (start-up, shut-down, load changes) and standby situations.

3.1.17
abnormal conditions of operation
operating conditions of low occurrence (typically only a few times during equipment lifetime)

Note 1 to entry: These include human errors, loss of power supply, overvoltages, earthquake, etc. After such a condition has occurred, equipment inspection may be required.

3.1.18
electrical work
work on, with or near an electrical power installation such as testing and measurement, repairing, replacing, modifying, extending, erection and inspection

3.2 Definitions concerning electrical power installations

3.2.1
closed electrical operating area
room or location for operation of electrical power installations and equipment to which access is intended to be restricted to skilled or instructed persons or to lay ordinary persons under the supervision of skilled or instructed persons

3.2.2
operating area subject to fire hazard
room, area or location, indoor or outdoor, where there is a danger, due to local or operating conditions, that hazardous quantities of easily flammable materials may come so close to the electrical equipment as to cause a fire hazard resulting from the high temperature of the equipment or due to arcing

3.2.3
sump
receptacle which is intended to receive the insulating liquid of a transformer or other equipment in case of leakage

Licensed copy: Sukanya Arayangkoon, The Electricity Generating Authority of, Version correct as of 22/03/2022

Licensed copy: Sukanya Arayangkoon, The Electricity Generating Authority of, Version correct as of 22/03/2022

3.2.4
catchment tank
collecting tank for the leakage liquids, rain water, etc. for one or more transformers or other equipment

3.2.5
busbar
conductor with associated connections, joints and insulated supports forming a common electrical connection between a number of circuits or individual pieces of apparatus

3.3 Definitions concerning types of electrical power installations

3.3.1
substation
<of a power system)> part of a power system, concentrated in a given place, including mainly the terminations of transmission or distribution lines, switchgear and housing and which may also include transformers

Note 1 to entry: It generally includes facilities necessary for system security and control (e.g. the protective devices).

Note 2 to entry: According to the nature of the system within which the substation is included, a prefix may qualify it.

EXAMPLE Transmission substation (of a transmission system), distribution substation, 400 kV substation, 20 kV substation.

[SOURCE: IEC 60050-605:1983, 605-01-01, modified – Supplementary information has been moved from the definition to Note 1 to entry.]

3.3.2
power station
installation whose purpose is to generate electricity and which includes civil engineering works, energy conversion equipment and all the necessary ancillary equipment

[SOURCE: IEC 60050-602:1983, 602-01-01]

3.3.3
installations of open design
installations where the equipment does not have protection against direct contact

3.3.4
switchgear 'bay' or 'cubicle'
each branch of a busbar in an electrical power installation

3.4 Definitions concerning safety measures against electric shock

3.4.1
protection against direct contact
measures which prevent persons coming into hazardous proximity to live parts or those parts which could carry a hazardous voltage, with parts of their bodies or objects (reaching the danger zone)

3.4.2
protection in case of indirect contact
protection of persons from hazards which could arise, in event of fault, from contact with exposed-conductive-parts of electrical equipment or extraneous-conductive-parts

3.4.3
enclosure
part providing protection of equipment against certain external influences and, in any direction, protection against direct contact

3.4.4
protective barrier
<electrically> part providing protection against direct contact by a human being or livestock with hazardous-live-parts from any usual direction of access

[SOURCE: IEC 60050-195:2021, 195-06-15, modified – In the definition, "contact" has been replaced with "direct contact".]

3.4.5
protective obstacle
part preventing unintentional direct contact, but not preventing direct contact by deliberate action

[SOURCE: IEC 60050-826:2004, 826-12-24]

3.5 Definitions concerning clearances

3.5.1
clearance
distance between two conductive parts along a string stretched the shortest way between these conductive parts

[SOURCE: IEC 60050-441:1984, 441-17-31]

3.5.2
minimum clearance
smallest permissible clearance in air between live parts or between live parts and earth

3.5.3
protective barrier clearance
smallest permissible clearance between a protective barrier and live parts or those parts which may become subject to a hazardous voltage

3.5.4
protective obstacle clearance
smallest permissible clearance between a protective obstacle and live parts or those parts which may become subject to a hazardous voltage

3.5.5
danger zone
in the case of high voltage, area limited by the minimum clearance around hazardous-live-parts without complete protection

Note 1 to entry: Entering the danger zone is considered the same as touching hazardous-live-parts.

[SOURCE: IEC 61140:2016, 3.35]

3.5.6
minimum clearance of danger zone
N
clearance which describes the area of danger zone around hazardous-live-parts without complete protection against direct contact

Licensed copy: Sukanya Arayangkoon, The Electricity Generating Authority of, Version correct as of 22/03/2022

Note 1 to entry: The values for minimum clearance of danger zone in Table 2, Table 3 and Annex A are designated as "N".

Note 2 to entry: The safety clearances as given in Clause 7 are based on the minimum clearance of danger zone.

3.5.7
boundary clearance
smallest permissible clearance between an external fence and live parts or those parts which may become subject to a hazardous voltage

3.5.8
minimum height
smallest permissible vertical clearance between accessible surfaces and live parts without protection against direct contact or those parts which may become subject to a hazardous voltage

3.5.9
standard short-duration power-frequency voltage
sinusoidal voltage with frequency between 48 Hz and 62 Hz, and duration of 60 s

[SOURCE: IEC 60071-1:2019, 3.18.1]

3.5.10
standard rated short-duration power-frequency withstand voltage
RMS value standardized as withstand voltage for levels of specified standard short-duration power-frequency voltages

Note 1 to entry: See IEC 60071-1:2019, 5.6 for specified voltage levels.

3.5.11
standard lightning impulse voltage
impulse voltage having a front time of 1,2 µs and a time to half-value of 50 µs

[SOURCE: IEC 60071-1:2019, 3.18.3, modified – "voltage" added to term.]

3.5.12
standard rated lightning impulse withstand voltage
peak value, standardized as withstand voltage of standard lightning impulse voltage

Note 1 to entry: See 60071-1 2019, 5.7 for specified values.

3.5.13
standard switching impulse voltage
impulse voltage having a time to peak of 250 µs and a time to half-value of 2 500 µs

[SOURCE: IEC 60071-1:2019, 3.18.2, modified – "voltage" added to term.]

3.5.14
standard rated switching impulse withstand voltage
peak value, standardized as withstand voltage of standard switching impulse voltage

Note 1 to entry: See 60071-1 2019, 5.7 for specified values.

Licensed copy: Sukanya Arayangkoon, The Electricity Generating Authority of, Version correct as of 22/03/2022

Licensed copy: Sukanya Arayangkoon, The Electricity Generating Authority of, Version correct as of 22/03/2022

3.6 Definitions concerning control and protection

3.6.1
interlocking device
device which makes the operation of a switching device dependent upon the position or operation of one or more other pieces of equipment

[SOURCE: IEC 60050-441:1984, 441-16-49]

3.6.2
local control
control of an operation at a point on or adjacent to the controlled switching device

[SOURCE IEC 60050-441:1984, 441-16-06]

3.6.3
remote control
control of operation at a point distant from the controlled switching device

[SOURCE: IEC 60050-441:1984, 441-16-07]

3.6.4
automatic reclosing
reclosing of a circuit-breaker associated with a faulted section of a network by automatic means after a time interval which permits that section to recover from a transient fault

[SOURCE: IEC 60050-614:2016, 614-02-29]

3.7 Definitions concerning earthing

3.7.1
local earth
local ground (US)
part of the Earth that is in electric contact with an earth electrode and that has an electric potential not necessarily equal to zero

Note 1 to entry: The conductive mass of the Earth, whose electric potential at any point is conventionally taken as equal to zero.

[SOURCE: IEC 60050-195:2021, 195-01-03, modified – Note 1 to entry has been added.]

3.7.2
reference earth
reference ground (US)
part of the Earth considered as conductive, the electric potential of which is conventionally taken as zero, being outside the zone of influence of the relevant earthing arrangement

Note 1 to entry: The concept "Earth" means the planet and all its physical matter.

[SOURCE: IEC 60050-195:2021, 195-01-01, modified –"any earthing arrangement" has been replaced with "the relevant earthing arrangement".]

3.7.3
earth electrode
ground electrode (US)
<electrical power installations> conductive part, which may be embedded in a specific conductive medium, e.g. in concrete or coke, in electric contact with the Earth

[SOURCE: IEC 60050-195:1998, 195-02-01, modified – "<electrical power installation>" has been added.]

3.7.4
earthing conductor
grounding conductor (US)
conductor which provides a conductive path, or part of the conductive path, between a given point in a system or in an installation or in equipment and an earth electrode

Note 1 to entry: Where the connection between part of the installation and the earth electrode is made via a disconnecting link, disconnecting switch, surge arrester counter, surge arrester control gap, etc., then only that part of the connection permanently attached to the earth electrode is an earthing conductor.

[SOURCE: IEC 60050-195:2021, 195-02-03, modified – In the definition, "forming a conductive path between a conductive part" has been replaced with "which provides a conductive path, or part of the conductive path, between a given point in a system or in an installation or in equipment". Note 1 to entry has been added.]

3.7.5
bonding conductor
protective conductor for ensuring equipotential bonding

3.7.6
earthing system
grounding system (US)
arrangement of electric connections and devices involved necessary to earth equipment or a system separately or jointly

[SOURCE: IEC 60050-826:2004, 826-13-04, modified – In the terms, "system" has been replaced by "arrangement". The definition clarifies that involved parts can be separately or jointly earthed.]

3.7.7
structural earth electrode
metal part, which is in conductive contact with the earth or with water directly or via concrete, whose original purpose is not earthing, but which fulfils all requirements of an earth electrode without impairment of the original purpose

Note 1 to entry: Examples of structural earth electrodes are pipelines, sheet piling, concrete reinforcement bars in foundations and the steel structure of buildings, etc.

3.7.8
electric resistivity of soil
ρ_E
resistivity of a typical sample of soil

[SOURCE: IEC 60050-195:1998, 195-01-19]

3.7.9
resistance to earth
R_E
real part of the impedance to earth

[SOURCE: IEC 60050-195:1998, 195-01-18]

Licensed copy: Sukanya Arayangkoon, The Electricity Generating Authority of, Version correct as of 22/03/2022

3.7.10
impedance to earth
Z_E
impedance at a given frequency between a specified point in a system or in an installation or in equipment and reference earth

Note 1 to entry: The impedance to earth is determined by the directly connected earth electrodes and also by connected overhead earth wires and wires buried in earth of overhead lines, by connected cables with earth electrode effect and by other earthing systems which are conductively connected to the relevant earthing system by conductive cable sheaths, shields, PEN conductors or in another way. Impedance to earth is composed of the resistance to earth of the substation and connected parallel impedances such as overhead ground wires and cable sheaths.

[SOURCE: IEC 60050-195:2021, 195-01-17, modified – The symbol Z_E and Note 1 to entry have been added.]

3.7.11
earth potential rise
EPR
U_E
voltage between an earthing system and reference earth

3.7.12
touch voltage
U_T
<effective> voltage between conductive parts when touched simultaneously

Note 1 to entry: The value of the effective touch voltage may be appreciably influenced by the impedance of the person in electric contact with these conductive parts.

[SOURCE: IEC 60050-195:2021, 195-05-11, modified – The symbol U_T has been added. In the definition, "by a human being or livestock" has been deleted. In Note 1 to entry, "of the human being or livestock" has been replaced by "of the person".]

3.7.13
permissible touch voltage
U_{Tp}
limit value of touch voltage U_T

3.7.14
prospective touch voltage
U_{vT}
voltage between simultaneously accessible conductive parts when those conductive parts are not being touched

3.7.15
prospective permissible touch voltage
U_{vTp}
limit value of prospective touch voltage U_{vT}

3.7.16
step voltage
voltage between two points on the Earth's surface that are 1 m distant from each other

Note 1 to entry: 1 m is considered to be the stride length of a person.

[SOURCE: IEC 60050-195:2021, 195-05-12, modified – In the definition, "that are 1 m distant from each other" has been added. Note 1 to entry has been replaced.]

Licensed copy: Sukanya Arayangkoon, The Electricity Generating Authority of, Version correct as of 22/03/2022

Licensed copy: Sukanya Arayangkoon, The Electricity Generating Authority of, Version correct as of 22/03/2022

3.7.17
transferred potential
potential rise of an earthing system caused by a current to earth transferred by means of a connected conductor (for example a metallic cable sheath, PEN conductor, pipeline, rail) into areas with low or no potential rise relative to reference earth, resulting in a potential difference occurring between the conductor and its surroundings

Note 1 to entry: The definition also applies where a conductor, which is connected to reference earth, leads into the area of the potential rise.

3.7.18
stress voltage
voltage appearing during earth fault conditions between an earthed part or enclosure of equipment or device and any other of its parts and which could affect its normal operation or safety

3.7.19
global earthing system
equivalent earthing system created by the interconnection of local earthing systems that ensures, by the proximity of the earthing systems, that there are no dangerous touch voltages

Note 1 to entry: Such systems permit the division of the earth fault current in a way that results in a reduction of the earth potential rise at the local earthing system. Such a system could be said to form a quasi-equipotential surface.

Note 2 to entry: The existence of a global earthing system may be determined by sample measurements or calculation for typical systems. Typical examples of global earthing systems are in city centres; urban or industrial areas with distributed low- and high-voltage earthing.

3.7.20
multi-earthed HV neutral conductor
multi-grounded HV neutral conductor (US)
neutral conductor of a distribution line connected to the earthing system of the source transformer and regularly earthed

3.7.21
exposed-conductive-part
conductive part of equipment that can be touched and that is not live under normal conditions, but that can become live when basic insulation fails

[SOURCE: IEC 60050-195:2021, 195-06-10]

3.7.22
extraneous-conductive-part
conductive part not forming part of the electrical power installation and likely to introduce an electric potential, generally the electric potential of a local earth

[SOURCE: IEC 60050-195:2021, 195-06-11, modified – In the definition, "electrical installation" has been replaced with "electrical power installation".]

3.7.23
PEN conductor
conductor combining the functions of both a protective earthing conductor and a neutral conductor

[SOURCE: IEC 60050-195:2021, 195-02-12]

Licensed copy: Sukanya Arayangkoon, The Electricity Generating Authority of, Version correct as of 22/03/2022

3.7.24
earth fault
ground fault (US)
fault caused by a conductor being connected to earth or by the insulation resistance to earth becoming less than a specified value

Note 1 to entry: Earth faults of two or several phase conductors of the same system at different locations are designated as double or multiple earth faults.

3.7.25
earth fault current
I_F
current which flows from the main circuit to earth or earthed parts at the fault location

Note 1 to entry: For single earth faults, this is in systems with:

- isolated neutral, the capacitive earth fault current;
- high resistive earthing, the RC composed earth fault current;
- resonant earthing, the earth fault residual current;
- solid or low impedance neutral earthing, the line-to-earth short-circuit current.

Note 2 to entry: Further earth fault current may result from double earth fault and line to line to earth

4 Fundamental requirements

4.1 General

4.1.1 General requirements

Electrical power installations and equipment shall be capable of withstanding electrical, mechanical, climatic and environmental influences anticipated on site.

Site selection should take into account matters including, but not limited to:

– access to allow for construction, maintenance and operations activities;
– community impact including proximity to sensitive sites, visual, noise, amenity and traffic;
– environmental impact including consideration of pollution, ventilation, fauna and flora;
– impact of topography, earthquake zones, fault lines, flood paths, swamps, avalanches or landslides;
– soil conditions, including thermal and electrical resistivity and soil contamination;
– site dimensions;
– line corridors;
– site security.

The design shall take into account:

– the purpose of the installation;
– the user requirements such as power quality, reliability, availability, and ability of the electrical network to withstand the effects of transient conditions such as starting of large motors, short power outages and re-energization of the electrical power installation;
– load conditions, design short circuit currents, etc.;
– the safety of the operators and the public;
– the environmental influence;
– the possibility for extension (if required) and maintenance.

The user shall define preferences for specific maintenance features and identify the safety requirements to be met for levels of segregation of the switchgear and controlgear to ensure minimal plant shutdown. Where necessary, the levels of segregation of switchgear shall be such as to minimize the spread of a fault, including a fire, occurring in any defined module into adjacent modules.

There are operating conditions of low occurrence or low cumulative duration which can occur and for which specific design criteria and measures required to maintain safety conditions and to avoid damage to electrical or plant equipment are subject to agreement between the supplier and user.

The generators shall be capable of meeting the requirements for connection to the power system grid or local grid, e.g. for voltage regulation, frequency response, etc.

4.1.2 Agreements between supplier and user

The working procedures of the user shall be taken into account in the design of the electrical power installation.

For design and erection of electric power installations, additional agreements between supplier/manufacturer/contractor/planner and user/orderer/owner (hereinafter denoted as supplier and user) shall be followed, which also may have effects to necessary operational requirements. References can be found in the subclauses as listed in Table 1 below.

Licensed copy: Sukanya Arayangkoon, The Electricity Generating Authority of, Version correct as of 22/03/2022

Licensed copy: Sukanya Arayangkoon, The Electricity Generating Authority of, Version correct as of 22/03/2022

Table 1 – References to subclauses where agreement between supplier and user is required

Subclause	Item
4.1.1	General requirements (specific design criteria)
4.2.2	Voltage classification (Nominal values, rated values)
4.3.1	Mechanical requirements, local conditions
4.3.9	Special conditions and requirements for seismic environment
4.4.2.1	Climatic and environmental conditions (for auxiliary equipment: indoor)
4.4.2.2	Climatic and environmental conditions (for auxiliary equipment: outdoor)
4.4.3.1	Conditions different from the normal environmental conditions
4.4.3.5	Special conditions and requirements for vibrations
6.1.1	Compliance with operational and safety procedures
6.2.1	Method of indication (contact position of interrupting or isolating equipment)
6.2.1	Interlocks and/or locking facilities
6.2.1	Switching devices (reduced rating)
6.2.1	Rating of switchgear (specific requirements)
6.2.8	Insulators, level of pollution and wetting conditions
6.2.9.2	Insulated cables (temperatures at special operating conditions)
7.1.1	Higher values for distances, clearances and dimensions
7.1.1	Common requirements (operating procedures)
7.1.3	Documentation (extent of the documentation)
7.1.4	Transport routes (load capacity, height and width)
7.1.6	Lighting (presence and extent of the lighting)
7.5.4	Maintenance and operating areas (distances of the escape route)
8.4.1	Means to protect persons working on electrical power installations (working procedures)
8.4.4	Devices for determining the de-energized state (extent of provisions)
8.4.5	Devices for earthing and short-circuiting (Extent of provision or supply)
8.4.6.2	Insertable insulated partitions
8.4.6.3	Insertable partition walls
8.5	Protection from danger resulting from arc fault (degree of importance of measures)
8.6	Protections against direct lightning strokes (method of analysis)
8.7.1	Requirements for fire extinguishing equipment
8.7.2.2	Reduction of distances G_1 and G_2
8.9	The language of the identification and marking
9.1	Protection systems, protection coordination, settings, backup, etc.
9.3.1.3	Auxiliary systems and battery sizing
9.3.2	Compressed air system (sectionalization for maintenance)
9.3.3	SF_6 gas handling plants (design and capacity of the plant)
10.2.1	Fundamental requirements for design of the earthing system
11.1	Inspection and testing (extent of the inspection and testing / specification / documentation)
11.2	Verification of specified performances
11.3	Tests during installation and commissioning (requirements / test equipment / schedule of tests)
11.4	Trial running (performance)

Licensed copy: Sukanya Arayangkoon, The Electricity Generating Authority of, Version correct as of 22/03/2022

4.2 Electrical requirements

4.2.1 Methods of neutral earthing

The method of neutral earthing strongly influences the fault current level and the fault current duration. Furthermore, the neutral earthing method is important with regard to the following:

– selection of insulation level;
– characteristics of overvoltage – limiting devices – such as spark gaps or surge arresters;
– selection of protective relays;
– design of earthing system.

The following are examples of neutral earthing methods:

– isolated neutral;
– resonant earthing;
– high resistive earthing;
– solid (low impedance) earthing.

The choice of the type of neutral earthing is normally based on the following criteria:

– local regulations (if any);
– continuity of supply required for the network;
– limitation of damage to equipment caused by earth faults;
– selective elimination of faulty sections of the network;
– detection of fault location;
– touch and step voltages;
– inductive interference;
– operation and maintenance aspects.

One galvanically connected system has only one method of neutral earthing. Different galvanically independent systems may have different methods of neutral earthing. If different neutral earthing configurations can occur during normal or abnormal operating conditions, equipment and protective system shall be designed to operate under these conditions.

4.2.2 Voltage classification

The user shall define the nominal voltage and the maximum operating voltage of their system. Based on the maximum operating voltage, the highest voltage for installation (U_{m}) shall be selected either from Table 2, Table 3 or Annex A.

4.2.3 Current in normal operation

Every part of an electrical power installation shall be designed and constructed to withstand currents under defined operating conditions.

4.2.4 Short-circuit current

Electrical power installations shall be designed, constructed and erected to safely withstand the mechanical and thermal effects resulting from short-circuit currents.

NOTE 1 Where an installation has on-site generation, motors or parallel operation with a network (co-generation), fault levels can increase.

Licensed copy: Sukanya Arayangkoon, The Electricity Generating Authority of, Version correct as of 22/03/2022

For the purpose of this document, all types of short-circuit shall be considered. Examples include:

– three-phase;
– phase-to-phase;
– phase-to-earth;
– double phase-to-earth.

Electrical power installations shall be protected with automatic devices to disconnect three-phase and phase-to-phase short-circuits.

Electrical power installations shall be protected either with automatic devices to disconnect earth faults or with devices to indicate the earth fault condition. The selection of the device is dependent upon the method of neutral earthing.

The standard value of rated duration of the short-circuit is 1,0 s.

If a value other than 1 s is appropriate in the design process, recommended values would be 0,5 s, 2,0 s and 3,0 s.

NOTE 2 The rated duration includes the fault clearance time.

Methods for the calculation of short-circuit currents in three-phase AC systems are given in the IEC 60909 (all parts).

Methods for the calculation of the effects of short-circuit current are given in IEC 60865-1 and, for power cables, in IEC 60949.

4.2.5 Rated frequency

Electrical power installations shall be designed for the rated frequency of the system in which they shall operate.

4.2.6 Corona

The design of electrical power installations shall be such that radio interference due to electromagnetic fields, e.g. caused by corona effects, will not exceed a specified level.

NOTE 1 Recommendations for minimizing the radio interference of high-voltage installations are reported in CISPR 18-1, CISPR 18-2 and CISPR 18-3.

NOTE 2 Maximum permissible levels of radio interference can be given by provincial, national or regional authorities.

NOTE 3 Guidance on acceptable levels of radio interference voltage for switchgear and controlgear can be found in IEC 62271-1.

When the acceptable value is exceeded, the corona level may be controlled, for example, by the installation of corona rings or the recessing of fasteners on bus fittings for high-voltage suspension insulator assemblies, bus support assemblies, bus connections and equipment terminals.

4.2.7 Electric and magnetic fields

The design of an electrical power installation shall be such as to limit the electric and magnetic fields generated by energized equipment to an acceptable level for exposed people.

NOTE Provincial, national or regional regulations can specify acceptable levels. Further information is available from International Commission on Non-Ionizing Radiation Protection (ICNIRP) or IEEE.

Licensed copy: Sukanya Arayangkoon, The Electricity Generating Authority of, Version correct as of 22/03/2022

4.2.8 Overvoltages

Equipment shall be protected against overvoltages resulting from switching operations or lightning that could exceed the withstand values according to IEC 60071-1 and IEC 60071-2.

4.2.9 Harmonics

Consideration should be given to the effect of harmonic currents and harmonic voltages on the electrical power installation, e.g. in industrial installations. Harmonic analyses may be required to determine what corrective measures are needed to meet local regulations and/or to ensure correct operation of the whole electrical system.

4.2.10 Electromagnetic compatibility

Electrical power installations should be designed so that they function properly in their given EMC environment.

NOTE Guidance on ensuring electromagnetic compatibility and to ensuring that electromagnetic fields meet provincial, national or regional authority permissible limits can be found in Clause 9 and Clause 10. As well, guidance can be found in IEC 61000 (all parts), with particular reference to IEC 61000-5 (all parts), IEC 61000-6-5, IEC 62271-1, IEC 62271-208 and CIGRE Technical Brochure 535.

4.3 Mechanical requirements

4.3.1 General

Equipment and structures, including their foundations, shall withstand all the anticipated load combinations.

Due consideration should be given to the ultimate and serviceability limit states of the structures.

The load assumptions related to the local conditions shall be determined in an agreement between the supplier and user.

Two load cases shall be considered, normal and exceptional.

In each of these load cases, several combinations shall be investigated. The most unfavourable combination shall be used to determine the mechanical strength of the structures. In the normal load case, the following loads shall be considered:

– dead load;
– tension load;
– erection load;
– ice load;
– wind load.

Consideration should be given to temporary stresses and loads that may be applied during construction or maintenance procedures. Specific equipment can be affected by cyclic loads (refer to specific equipment standards).

In the exceptional load case, dead load and tension load acting simultaneously with the largest of the following occasional loads shall be considered:

– switching forces;
– short-circuit forces;
– loss of conductor tension;
– seismic loads;

– buoyant force to the foundation at flooding.

4.3.2 Tension load

The tension load shall be calculated from the maximum conductor tension under the most unfavourable local conditions.

NOTE Possible combinations include, for example: −20 °C without ice and without wind; −5 °C with ice and without wind; +5 °C with wind.

4.3.3 Erection load

The erection load is a load of at least 1,0 kN applied at the most critical position of a supporting structure, tensioning portal, etc.

4.3.4 Ice load

In regions where icing can occur, the resulting load on flexible conductors and on rigid busbars and conductors shall be taken into account.

If national standards and regulations, local experience or statistics are not available, ice coatings of 1 mm, 10 mm or 20 mm based on criteria given in IEC 62271-1 may be assumed.

4.3.5 Wind load

Wind loads, which can be very different depending on the local topographic influences and the height of the structures above the surrounding ground, shall be taken into account. The most unfavourable wind direction shall be considered.

IEC 62271-1 contains requirements for wind loading on switchgear and controlgear.

4.3.6 Switching forces

Switching forces shall be considered when designing supports. The forces shall be determined by the designer of the equipment.

4.3.7 Short-circuit forces

The mechanical effects of a short-circuit can be estimated by the methods detailed in IEC 60865-1.

NOTE CIGRE Technical Brochure 214, "The mechanical effects of short-circuit currents in open air substations" gives additional advice.

4.3.8 Loss of conductor tension

A structure with tension insulator strings shall be designed to withstand the loss of conductor tension resulting from breakage of the insulator or conductor which gives the most unfavourable load case.

NOTE 1 General practice is to base the calculation on 0 °C, no ice and no wind load.

NOTE 2 For bundle conductors, only one subconductor is assumed to fail.

4.3.9 Seismic loads

Special conditions and requirements shall be agreed between the supplier and user (see also 4.4.3.5 and IEC 60721-2-6) and have regard to local requirements if any.

Electrical power installations situated in a seismic environment shall be designed to take this into account.

Licensed copy: Sukanya Arayangkoon, The Electricity Generating Authority of, Version correct as of 22/03/2022

Where load specifications apply to the installation of civil work or equipment to meet seismic conditions, then these specifications shall be observed.

Seismic loads shall be dealt with in accordance with appropriate standards for electric power installations: e.g. IEC 62271-207 for GIS, IEC 62271-210 for metal enclosed and solid-insulation enclosed switchgear and controlgear assemblies, IEC TR 62271-300 for circuit-breakers and IEC TS 61463 for bushings.

The following measures shall be taken into account.

a) Any individual equipment shall be designed to withstand the dynamic forces resulting from the vertical and horizontal motions of the soil. These effects may be modified by the response of the foundation and/or the supporting frame and/or the floor in which this equipment is installed. The response spectrum of the earthquake shall be considered for the design of the equipment.
b) The layout shall be chosen in order to limit the loads due to interconnections between adjoining devices needing to accommodate large relatively axial, lateral, torsional or other movements to acceptable values. Attention should be paid to other stresses which may develop during an earthquake.

4.3.10 Dimensioning of structures

National standards and regulations exist regarding the dimensioning of structures.

4.4 Climatic and environmental conditions

4.4.1 General

Electrical power installations, including all devices and auxiliary equipment which form an integral part of them, shall be designed for operation under the climatic and environmental conditions listed below.

Specific attention shall be given to hazardous areas. The presence of condensation, precipitation, particles, dust, corrosive elements and hazardous atmospheres shall be specified in such a manner that appropriate electrical equipment can be selected. Zone classification for explosive atmospheres shall be performed in accordance with IEC 60079-10-1 and IEC 60079-10-2. Classification of environmental conditions can be according to IEC 60721 (all parts).

4.4.2 Normal conditions

4.4.2.1 Indoor

For indoor electrical power installations, normal conditions shall be as follows.

a) The ambient air temperature does not exceed 40 °C and its average value, measured over a period of 24 h, does not exceed 35 °C.

   The minimum ambient air temperatures are:

   – −5 °C for class "−5 °C indoor";
   – −15 °C for class "−15 °C indoor";
   – −25 °C for class "−25 °C indoor".

   On auxiliary equipment, such as relays and control switches, intended to be used in ambient air temperature below −5 °C, an agreement between the supplier and user is necessary.
b) The influence of solar radiation shall not be taken into account.
c) The altitude does not exceed 1 000 m above sea level.
d) The ambient air is not significantly polluted by dust, smoke, corrosive and/or flammable gases, vapours or salt.

Licensed copy: Sukanya Arayangkoon, The Electricity Generating Authority of, Version correct as of 22/03/2022

e) The average value of the relative humidity, measured over a period of 24 h, does not exceed 95 %.

For these conditions, condensation may occasionally occur.

NOTE 1 Condensation can be expected where sudden temperature changes occur in periods of high humidity.

NOTE 2 To avoid breakdown of insulation and/or corrosion of metallic parts due to high humidity and condensation, equipment designed for such conditions and tested accordingly is normally used.

NOTE 3 Condensation can be prevented by special design of the building or housing, by suitable ventilation and heating of the station or by the use of dehumidifying equipment.

f) Vibration due to causes external to the equipment or to earth tremors is negligible.

4.4.2.2 Outdoor

For outdoor electrical power installations, normal conditions shall be as follows.

a) The ambient air temperature does not exceed 40 °C and its average value, measured over a period of 24 h, does not exceed 35 °C.

The minimum ambient air temperatures are:

– −10 °C for class "−10 °C outdoor";
– −25 °C for class"−25 °C outdoor";
– −30 °C for class "−30 °C outdoor";
– −40 °C for class "−40 °C outdoor".

Rapid temperature changes shall be taken into account, see 4.4.2.2, item g) and 4.4.3.4.

Auxiliary equipment, such as relays and control switches, intended to be used in ambient air temperatures below –5 °C, are to be a subject of an agreement between the supplier and user.

b) Solar radiation up to a level of 1 000 W/m^2 (on a clear day at noon) shall be considered.

NOTE 1 Under certain conditions of solar radiation, appropriate measures, for example roofing, forced ventilation, etc., can be necessary, or derating can be used in order not to exceed the specified temperature rises.

NOTE 2 Details of global solar radiation are given in IEC 60721-2-4.

NOTE 3 UV radiation can damage some synthetic materials. For more information, IEC 60068 (all parts) can be consulted.

c) The altitude does not exceed 1 000 m above sea level.

d) The ambient air is not significantly polluted by dust, smoke, corrosive gases, vapours or salt. Pollution does not exceed site pollution severity class c – Medium, according to IEC TS 60815-1.

e) The ice coating does not exceed 1 mm for class 1, 10 mm for class 10 and 20 mm for class 20. Additional information is given in 4.3.4.

f) The wind speed does not exceed 34 m/s.

NOTE 4 Characteristics of wind are described in IEC 60721-2-2.

g) Presence of condensation and precipitation in the form of dew, condensation, fog, rain, snow, ice or hoar frost shall be taken into account.

NOTE 5 Precipitation characteristics for insulation are described in IEC 60060-1 and IEC 60071-1. For other properties, precipitation characteristics are described in IEC 60721-2-2.

h) Vibration due to causes external to the equipment or to earth tremors is negligible.

Licensed copy: Sukanya Arayangkoon, The Electricity Generating Authority of, Version correct as of 22/03/2022

Licensed copy: Sukanya Arayangkoon, The Electricity Generating Authority of, Version correct as of 22/03/2022

4.4.3 Special conditions

4.4.3.1 General

When high-voltage equipment is used under conditions different from the normal environmental conditions given in 4.4.2, the following subclauses 4.4.3.2 to 4.4.3.5 shall be complied with.

4.4.3.2 Altitude

For electrical power installations situated at an altitude higher than 1 000 m above sea level, the insulation level of external insulation under the standardized reference atmospheric conditions shall be determined by multiplying the insulation withstand voltages required at the service location by a factor K_a in accordance with IEC 62271-1.

Linear interpolation of clearances, as stated in Table 2 and Table 3, is acceptable.

For low-voltage auxiliary and control equipment, special precautions shall be taken if the altitude is higher than 2 000 m above sea level. See IEC 60664-1.

NOTE 1 For internal pressurized insulation, the dielectric characteristics are identical at any altitude and no special precautions need be taken.

NOTE 2 The pressure variation due to altitude is given in IEC 60721-2-3. Issues that will arise, include the following:

– thermal exchanges by convection, conduction or radiation;

– efficiency of heating or air-conditioning;

– operating level of pressure devices;

– efficiency of diesel generating set or compressed air station;

– increase of corona effect.

NOTE 3 The correction factor K_a of IEC 62271-1 reflects the fact that modification is not required for altitudes below 1 000 m.

NOTE 4 For correction of creepage distance for DC installations, IEC TS 60815-4 can be consulted.

4.4.3.3 Pollution

For equipment in polluted ambient air, a site pollution severity class shall be specified, e.g. according to IEC TS 60815-1 class d (heavy) or class e (very heavy).

4.4.3.4 Temperature and humidity

For equipment in a place where the ambient temperature can be significantly outside the normal service condition range stated in 4.4.2, the preferred ranges of minimum and maximum temperature to be specified should be as follows:

- −50 °C and +40 °C for very cold climates;
- −5 °C and +50 °C for very hot climates.

In certain regions with frequent occurrence of warm, humid winds, sudden changes of temperature may occur, resulting in condensation, even indoors.

In tropical indoor conditions, the average value of relative humidity measured during a period of 24 h can be 98 %.

In some underground electrical power installations, equipment might occasionally be located under water. Such equipment shall be designed accordingly.

4.4.3.5 Vibration

Special conditions and requirements shall be agreed between the supplier and user (see also 4.3.9).

Vibration caused by wind, electromagnetic stresses, traffic (e.g. temporary road and railway traffic), operation (e.g. opening/reclosing of circuit-breakers), industrial processes (e.g. blasting and piling) and other foreseeable sources shall be considered. Transmitted vibrations through a common monolithic foundation or floor shall also be taken into account.

The withstand capability of equipment against vibrations shall be given by the manufacturer.

4.5 Particular requirements

4.5.1 Effects of small animals and micro-organisms

If biological activity (through birds, other small animals or micro-organisms) is a hazard, measures against such damage shall be taken. These may include appropriate choice of materials, measures to prevent access and adequate heating and ventilating (for more details see IEC 60721-2-7).

4.5.2 Noise level

If noise level limits are given (usually by administrative authorities), they shall be achieved by appropriate measures such as:

– using sound insulation techniques against sound transmitted through air or solids;

– using low noise equipment.

Criteria for noise evaluation for different places and different periods of day are given in ISO 1996-1.

4.5.3 Transport

The transport to site, e.g. large transformers and storage constraints may have consequences on the design of the high-voltage electrical power installation.

NOTE The transportation and storage parameters associated to their duration are defined in accordance with IEC 60721-3-1 and IEC 60721-3-2.

5 Insulation

5.1 General

As conventional (air insulated) electrical power installations are normally not impulse tested, the installation requires minimum clearances between live parts and earth and between live parts of phases in order to avoid flashover below the impulse withstand level selected for the electrical power installation.

Insulation coordination shall be in accordance with IEC 60071-1.

The procedure for insulation co-ordination consists of the selection of the highest voltage for the equipment together with a corresponding set of standard rated withstand voltages which characterize the insulation of the equipment needed for the application.

NOTE Table 2, Table 3 and Annex A are based on the requirements of IEC 60071-1.

Licensed copy: Sukanya Arayangkoon, The Electricity Generating Authority of, Version correct as of 22/03/2022

Licensed copy: Sukanya Arayangkoon, The Electricity Generating Authority of, Version correct as of 22/03/2022

5.2 Selection of insulation level

5.2.1 General

The insulation level shall be chosen according to the established highest voltage for installation U_m and/or impulse withstand voltage.

5.2.2 Consideration of methods of neutral earthing

The choice should be made primarily to ensure reliability in service, taking into account the method of neutral earthing in the system and the characteristics and the locations of overvoltage limiting devices to be installed.

NOTE Insulation coordination distinguishes between different types of overvoltages, e.g. power frequency overvoltage, transient overvoltages and very fast transient overvoltages.

In electrical power installations where

– the configuration of the system, or

– the adopted method of neutral earthing, or

– the protection by surge arresters,

and a high level of safety is required, will make it inappropriate to lower the level of insulation; one of the higher alternative values of Table 2, Table 3 and Annex A shall be chosen. Where the mentioned factors above make it appropriate, the lower values of Table 2, Table 3 and Annex A are sufficient.

5.2.3 Consideration of rated withstand voltages

In the voltage range I (1 kV < U_m ≤ 245 kV), the choice shall be based on the standard rated lightning impulse withstand voltages and the standard rated short-duration power-frequency withstand voltages of Table 2; in the voltage range II (U_m > 245 kV), the choice shall be based on the standard rated switching impulse withstand voltages and the standard rated lightning impulse withstand voltages given in Table 3. Values of rated insulation levels not standardized by IEC but based on current practice in some countries are listed in Annex A (Table A.1, Table A.2 and Table A.3).

NOTE 1 Standard rated short-duration power-frequency withstand voltage is applied in accordance with standard short-duration power-frequency voltage.

NOTE 2 Standard rated lightning impulse withstand voltage is applied in accordance with standard lightning impulse voltage.

NOTE 3 Standard rated switching impulse withstand voltage is applied in accordance with standard switching impulse voltage.

5.3 Verification of withstand values

If the minimum clearances in air given in Table 2, Table 3 and Annex A are maintained, it is not necessary to apply dielectric tests.

If the minimum clearances in air are not maintained, the ability to withstand the test voltages of the chosen insulation level shall be established by applying the appropriate dielectric tests in accordance with IEC 60060-1 for the withstand voltage values given in Table 2, Table 3 and Annex A.

If the minimum clearances in air are not maintained in parts or areas of an electrical power installation, dielectric tests restricted to these parts or areas will be sufficient.

NOTE In accordance with IEC 60071-1:2019, Annex A, minimum clearances can be lower if this has been proven by tests or by operating experience of lower overvoltages.

Licensed copy: Sukanya Arayangkoon, The Electricity Generating Authority of, Version correct as of 22/03/2022

5.4 Minimum clearances of live parts

5.4.1 General

The minimum clearances in air given in Table 2, Table 3 and Annex A apply for altitudes up to 1 000 m above sea level. For higher altitudes, see 4.4.3.2.

The values for the minimal clearance of danger zone are given in Table 2, Table 3 and Annex A, designated with the letter N. These values define the basis for the safety distances given in Clause 7.

If parts of an electrical power installation can be separated from each other by a disconnector, these parts shall be tested at the standard rated impulse withstand voltage for the isolating distance (see Tables 2 and 3 of IEC 62271-1:2017). If between such parts of an installation the minimum phase-to-phase clearances of Table 2 for voltage range I, and Table 3 for voltage range II of this document, are increased by 25 % or more, it is not necessary to apply dielectric tests.

5.4.2 Minimum clearances in voltage range I

In the voltage range I (see Table 2) the minimum clearances in air are based on unfavourable electrode configurations with small radii of curvature (i.e. rod-plate). As the standard rated lightning impulse withstand voltage (LIWV) in these voltage ranges is the same as for the phase-phase insulation and phase-earth insulation, the clearances apply for both insulation distances (in accordance with IEC 60071-1:2019, Table A.1).

5.4.3 Minimum clearances in voltage range II

In voltage range II (see Table 3) the clearances in air are determined by the standard rated switching impulse withstand voltage (SIWV). They substantially depend on the electrode configurations. In cases of difficulty in classifying the electrode configuration, it is recommended to make a choice based on the phase-to-earth clearances of the most unfavourable configuration such as, for example, the arm of a disconnector against the tower construction (rod-structure) (in accordance with IEC 60071-1:2019, Tables A.2 and A.3).

NOTE Other electrode configurations (gap factors) lead to different clearances, see IEC 60071-2:2018, Annex F.

Licensed copy: Sukanya Arayangkoon, The Electricity Generating Authority of, Version correct as of 22/03/2022

Table 2 – Minimum clearances in air – Voltage range I
(1 kV < U_m ≤ 245 kV)

Voltage range	Highest voltage for installation	Standard rated short-duration power-frequency withstand voltage	Standard rated lightning impulse withstand voltage [a]	Minimum phase-to-earth and phase-to-phase clearance N	
	U_m RMS	U_d RMS	U_p 1,2 µs/50 µs (peak value)	Indoor installations	Outdoor installations
	kV	kV	kV	mm	mm
I	3,6	10	20	60	120
			40	60	120
	7,2	20	40	60	120
			60	90	120
	12	28	60	90	150
			75	120	150
			95	160	160
	17,5	38	75	120	160
			95	160	160
	24	50	95	160	
			125	220	
			145	270	
	36	70	145	270	
			170	320	
	52	95	250	480	
	72,5	140	325	630	
	123	185 [b]	450 [b]	900	
		230	550	1 100	
	145	185 [b]	450 [b]	900	
		230	550	1 100	
		275	650	1 300	
	170	230 [b]	550 [b]	1 100	
		275	650	1 300	
		325	750	1 500	
	245	275 [b]	650 [b]	1 300	
		325 [b]	750 [b]	1 500	
		360	850	1 700	
		395	950	1 900	
		460	1 050	2 100	

[a] The standard rated lightning impulse withstand voltage is applicable to phase-to-phase and phase-to-earth.

[b] If values are considered insufficient to prove that the required phase-to-phase withstand voltages are met, additional phase-to-phase withstand tests are needed.

Table 3 – Minimum clearances in air – Voltage range II
(U_m > 245 kV)

Voltage range	Highest voltage for installation	Standard rated lightning impulse withstand voltage [a]	Standard rated switching impulse withstand voltage	Minimum phase-to-earth clearance		Standard rated switching impulse withstand voltage	Minimum phase-to-phase clearance	
	U_m RMS	U_p 1,2 µs/ 50 µs (peak value)	U_s Phase-to-earth 250 µs/2 500 µs (peak value)	Conductor – structure	Rod – structure N	U_s Phase-to-phase 250 µs/ 2 500 µs (peak value)	Conductor – conductor parallel	Rod – conductor
	kV	kV	kV	mm		kV	mm	
II	300	850/950	750	1 600 1 700 [b]	1 900	1 125	2 300	2 600
		950/1 050	850	1 800 1 900 [b]	2 400	1 275	2 600	3 100
	362	950/1 050	850	1 800 1 900 [b]	2 400	1 275	2 600	3 100
		1 050/1 175	950	2 200	2 900	1 425	3 100	3 600
	420	1 050/1 175	850	1 900 2 200 [b]	2 400	1 360	2 900	3 400
		1 175/1 300	950	2 200 2 400 [b]	2 900	1 425	3 100	3 600
		1 300/1 425	1 050	2 600	3 400	1 575	3 600	4 200
	550	1 175/1 300	950	2 200 2 400 [b]	2 900	1 615	3 700	4 300
		1 300/1 425	1 050	2 600	3 400	1 680	3 900	4 600
		1 425/1 550	1 175	3 100	4 100	1 763	4 200	5 000
	800	1 675/1 800	1 300	3 600	4 800	2 210	6 100	7 400
		1 800/1 950	1 425	4 200	5 600	2 423	7 200	9 000
		1 950/2 100	1 550	4 900	6 400	2 480	7 600	9 400
	1 100	1 950/2 100	1 425 [c]	4 200	5 600	-	-	-
		2 100/2 250	1 550	4 900	6 400	2 635	8 400 [d]	10 000 [d]
		2 250/2 400	1 675	5 600 [d]	7 400 [d]	2 764	9 100 [d]	10 900 [d]
		2 400/2 550	1 800	6 300 [d]	8 300 [d]	2 880	9 800 [d]	11 600 [d]
	1 200	2 100/2 250	1 675	5 600 [d]	7 400 [d]	2 848	9 600 [d]	11 400 [d]
		2 250/2 400	1 800	6 300 [d]	8 300 [d]	2 970	10 300 [d]	12 300 [d]
		2 550/2 700	1 950	7 200 [d]	9 500 [d]	3 120	11 200 [d]	13 300 [d]

[a] The standard rated lightning impulse withstand voltage is applicable phase-to-phase and phase-to-earth.

[b] Minimum clearance required for upper value of standard rated lightning impulse withstand voltage.

[c] This value is only applicable to the phase-to-earth insulation of single phase equipment not exposed to air.

[d] Tentative values still under consideration.

Licensed copy: Sukanya Arayangkoon, The Electricity Generating Authority of, Version correct as of 22/03/2022

Licensed copy: Sukanya Arayangkoon, The Electricity Generating Authority of, Version correct as of 22/03/2022

5.5 Minimum clearances between parts under special conditions

Under steady state conditions minimum clearances are increased such that, expressed as a percentage of minimum clearance values given in Table 2, Table 3 and Annex A, the following clearances are present:

a) between parts of an electrical power installation if phase opposition might occur: 120 %;

b) between parts of an electrical power installation in case of different insulation levels: 125 % of the higher insulation level.

Under dynamic conditions, the minimum temporary clearances expressed as a percentage of the minimum clearances under steady state conditions given in Table 2, Table 3 and Annex A [if necessary corrected in accordance with a) or b)] are to be considered independently and shall be greater than:

1) in the case of conductor swing due to the influence of wind: 75 %, or

2) in the case of rupture of one sub-chain in a multiple insulator chain: 75 %, or

3) in the case of conductor swing due to the influence of short-circuit: 50 %.

5.6 Tested connection zones

Information on mounting and service conditions of type tested equipment supplied by the manufacturer shall be observed on site.

Where no information is available, special considerations shall be given to the design of the transition from the type tested equipment to the equipment which is in accordance with Table 2, Table 3 and Annex A. This transition shall be as short as possible.

In tested connection zones, the minimum clearances according to Table 2, Table 3 and Annex A need not be maintained because the ability to withstand the test voltage is established by a dielectric type test.

NOTE Typical transitions zones are less than three times phase-to-phase clearance.

6 Electrical equipment

6.1 General requirements

6.1.1 Electrical equipment safety

Electrical equipment shall have a safe construction when assembled, installed and connected to supply in accordance with this document.

Electrical equipment shall not cause a danger from electric shock, fire, thermal effects or physical injury in the event of reasonably expected conditions of overload, abnormal operation, fault or external influences.

Electrical equipment shall be installed according to the manufacturer's instructions.

Where specific additional operational and safety procedures are needed for a certain electric power installation, such procedures shall be specified by the user.

Electrical equipment shall comply with the applicable IEC product standards. In absence of such standards, applicable provincial, national or regional standards may be considered.

6.1.2 User safety

Particular attention shall be given at the design stage to the safety of persons during the installation, operation and maintenance of electrical equipment.

Licensed copy: Sukanya Arayangkoon, The Electricity Generating Authority of, Version correct as of 22/03/2022

This may include:

a) manuals and instructions for transport, storage, installation, operation and maintenance;
b) special tools required for operation, maintenance and testing;
c) safe handling procedures developed for specific locations;
d) safe earthing measures.

NOTE Training and authorization for operating persons can be subject to provincial, national or regional regulation.

6.2 Specific requirements

6.2.1 Switching devices

Switching devices include, for example, circuit breakers and disconnectors. These devices shall be selected according to requirements in Clause 4.

A facility shall be provided to indicate the contact position of the interrupting or isolating equipment (including earthing switches). The method of indication shall be specified by the user and should be in accordance with the equipment standards.

The position indicator shall provide an unambiguous indication of the actual position of the equipment primary contacts.

The device indicating the open/close position shall be easily visible to the operator.

Disconnectors and earthing switches shall be installed in such a way that they cannot be inadvertently operated by tension or pressure exerted manually on operating linkages.

Where specified by the user, interlocking devices and/or locking facilities shall be installed to provide a safeguard against inappropriate operation.

If an interlocking system is provided which prevents the earthing switch from carrying the full short-circuit current, it is permissible, by agreement with the user, to specify a reduced rating for the switch which reflects its possible short-circuit-current stress.

Switching devices that are not capable of making prospective fault current may be used where satisfactory interlocking or switching procedures are provided.

Equipment shall be installed in such a way that ionized gas released during switching does not result in damage to the equipment or in danger for operating persons.

NOTE The word "damage" is considered to signify any failure of the equipment which impairs its function.

Protection from danger resulting from internal arc fault shall be considered as specified in 8.5.

Ratings of switchgear shall be based on the appropriate IEC high-voltage standards. The switching of certain circuits may however require the use of more severe constraints than defined in those standards. Examples of such circuits are filter banks and loads having very high reactance/resistance (X/R) ratios such as large transformers and generators. The specific requirements of switchgear for such circuits shall be agreed upon between the supplier and user.

6.2.2 Power transformers and reactors

Unless otherwise stated, 6.2.2 applies to both transformers and reactors even when only transformers are referred to in the text.

The main selection criteria for transformers are given in Clause 4 and Clause 8.

IEC 60076 (all parts) and IEC 61378 (all parts) define the specific details associated with the construction and performance of various types of transformers. The classification (used in this document) of these various types of transformers depends on a wide range of factors, such as winding materials, dielectrics and cooling systems.

When designing the transformer installation, the risk of fire propagation (see 8.7) shall be considered. Similarly, means shall be implemented to limit, if necessary, the acoustic noise level (see 4.5.2).

For transformers, care should be taken to mitigate the risk associated with excessive temperature rise. Suitable measures for cooling and ventilation shall be provided [see 7.5.7 and refer to IEC 60076 (all parts)].

Water (ground water, surface water and waste water) shall not be polluted by transformer installations. This shall be achieved by the choice of the design of transformer type and/or site provisions. For measures see 8.8.

If it is necessary to take samples (oil sampling) or to read monitoring devices (such as fluid level, temperature, or pressure), which are important for the operation of the transformer whilst the transformer is energized, it shall be possible to perform this safely and without damage to the equipment.

Air-core reactors shall be installed in such a way that the magnetic field of the short-circuit current will not be capable of drawing objects into the coil. Adjacent equipment shall be designed to withstand the resulting electromagnetic forces. Adjacent metal parts such as foundation reinforcements, fences and earthing grids shall not be subject to excessive temperature rise under normal load conditions.

The risk of damage to transformers resulting from ferro-resonance, harmonics, voltage surges, temporary overvoltages and other causes should be minimized by appropriate system studies and measures (e.g. surge arresters or appropriate choice of transformers' insulation).

Transformer pressure-relief devices, if used, shall be arranged to direct the oil discharge away from the operational controls where operating persons are likely to be standing.

6.2.3 Prefabricated type-tested switchgear

The requirements for gas insulated metal-enclosed switchgear (GIS), metal-enclosed switchgear, insulation-enclosed switchgear and other prefabricated type-tested switchgear assemblies are given in 7.4. For safety of persons and gas handling, refer to 8.8.3 and 9.3.3.

6.2.4 Instrument transformers

6.2.4.1 General

The secondary circuits of inductive instrument transformers shall be bonded to earth, or the secondary circuits shall be segregated by earthed metallic screening, in accordance with the recommendations of Clause 10.

The earthable point of the secondary circuit shall be determined in such a way that electrical interference is avoided.

Instrument transformers shall be installed in such a way that their secondary terminals are easily accessible when the switchgear assembly has been de-energized. The recommendations of IEC 61869 (all parts) shall be considered.

Licensed copy: Sukanya Arayangkoon, The Electricity Generating Authority of, Version correct as of 22/03/2022

Licensed copy: Sukanya Arayangkoon, The Electricity Generating Authority of, Version correct as of 22/03/2022

6.2.4.2 Current transformers

The rated overcurrent factor and the rated burden shall be selected so as to ensure correct functioning of the protective equipment and prevent damage to measuring equipment in the event of a short-circuit.

In high-voltage networks where the primary time constant is long and where automatic reclosing is practiced, it is recommended that the transient stress due to the aperiodic portion of the short-circuit current be taken into account. The recommendations of IEC 61869-2 should be considered.

If measuring devices are also connected to protective current transformer cores, the measuring devices shall, if necessary, be protected against the damage resulting from large short-circuit currents by means of suitable auxiliary transformers. Overcurrent protective devices shall not be used in secondary circuits of inductive current transformers.

If necessary, an effective screen between the primary circuit and the secondary circuit shall be provided for the reduction of the transient overvoltages on secondary circuits arising from the switching operation.

To protect against dangerous overvoltages, provisions shall be made to facilitate shorting the secondary windings of current transformers.

6.2.4.3 Voltage transformers

Voltage transformers shall be selected in such a way that the nominal output and accuracy are adequate for the connected equipment and wiring. The effects of ferro-resonance shall be considered.

The secondary side of voltage transformers shall be protected against the effects of short-circuits, and it is recommended that protective devices be monitored.

6.2.5 Surge arresters

Surge arresters shall be designed or positioned in such a way as to provide safety during operation in case of breaking of the housing or operating of any pressure-relief device.

The volt-time characteristics of surge arresters installed in the same circuit as current-limiting fuses shall take into account the overvoltages produced by the fuses.

If monitors are provided in the earth conductor of non-linear resistor type arresters, then the conductor between an arrester and the monitor, and the monitor itself, shall be protected in such a way as to prevent it being touched. It shall be possible to read the monitors and any counters with the equipment energized.

6.2.6 Capacitors

The risk of resonance and overvoltages due to harmonics shall be taken into consideration, and appropriate means for limitation of this risk shall be provided.

For the selection of the rated voltage and the current capacity of capacitors, the voltage increase caused by inductive reactances connected in series such as damping reactors and sound frequency or filter circuits shall be considered.

Capacitors for coupling, voltage measuring and overvoltage protection shall be selected according to the rated voltage of the switchgear, even if the operating voltage is lower.

Safe discharge of power capacitors shall be guaranteed. Discharge units shall be thermally and mechanically capable of carrying out their task.

The short-circuiting and earthing facilities provided for a capacitor bank shall take into account the interconnection of units within the bank, the discharge resistors and the type of fusing.

6.2.7 Line traps

The bandwidth shall be determined in accordance with the network frequency allocation.

6.2.8 Insulators

Unless otherwise specified, the minimum specific creepage distance of insulators shall comply with IEC TS 60815-1, IEC TS 60815-2 and IEC TS 60815-3 for the level of pollution specified by the user.

The requirements of the wet test procedure of IEC 62271-1 shall apply for all external insulation.

Insulator profiles and/or requirements for performance of outdoor insulators in polluted or heavy wetting conditions may be specified by the user.

6.2.9 Insulated cables

6.2.9.1 General

Subclause 6.2.9 is applicable to insulated cables except when used as overhead lines. If insulated cables are installed as overhead lines, they shall comply with the requirements of the appropriate IEC standards for overhead lines.

NOTE An example of a standard for overhead lines is IEC 60826.

6.2.9.2 Temperature

Insulated cables shall be selected and laid in such a way that the maximum permitted temperature is not exceeded for conductors, their insulation, the connections, the electrical equipment terminals or the surroundings under the following conditions:

a) normal operation;

b) special operating conditions, subject to previous agreement between the supplier and user;

c) short-circuit.

NOTE For dimensioning of cables related to current, IEC 60287, IEC 60853 (all parts) and IEC TR 62095 can be consulted.

The connection of a cable to electrical equipment (for example motors, circuit-breakers) shall not result in the cable being subjected to temperatures higher than those admissible for the cable in the foreseeable operating conditions.

6.2.9.3 Stress due to temperature changes

The stress on electrical equipment due to temperature-dependent changes in the length of conductors shall be taken into account. If necessary, the stress shall be relieved by suitable measures (for example flexible connections, expansion terminations or snaking). If these measures are not taken, the additional forces due to temperature changes shall be taken into account during verification of the mechanical strength of the equipment.

Licensed copy: Sukanya Arayangkoon, The Electricity Generating Authority of, Version correct as of 22/03/2022

Licensed copy: Sukanya Arayangkoon, The Electricity Generating Authority of, Version correct as of 22/03/2022

6.2.9.4 Flexible reeling and trailing cables

Flexible reeling and trailing cables shall be selected in accordance with the following requirements and conditions.

a) Trailing cables, or cables having at least equivalent mechanical and electrical characteristics as trailing cables, shall be used for supplying power to hoisting mobile or moveable equipment.

b) In the case of more severe mechanical stress, for example where the cables are subject to abrasion, tension, deflection or winding during operation, double-sheathed trailing cables or cables with at least equivalent mechanical and electrical characteristics as trailing cables shall be used.

c) Insulated cables for the power supply of hoisting mobile or moveable equipment shall contain a protective earth conductor.

d) The design of any connection, be it a joint, termination or other connection arrangement, shall be such that in the event of a strain being placed upon the cable, the protective conductor shall be the last to part or separate.

e) Insulated cables which are to be wound on a drum shall be dimensioned so that when the conductor is fully wound and subject to the normal service loading, the maximum permitted temperature is not exceeded.

The terminal ends of flexible and trailing cables shall be free from tension and compression; cable sleeves shall be protected against stripping and cable ends against twisting. The terminals shall also be designed so that the cables will not kink.

6.2.9.5 Crossings and proximities

Where insulated cables cross or are near to gas, water or other pipes, an appropriate clearance shall be maintained between cables and the pipelines. Where this clearance cannot be maintained, contact between the cables and the pipelines shall be prevented, for example, by the insertion of insulating shells or plates. These measures shall be coordinated with the operator of the pipeline. In the case of a long parallel routing, a calculation of the overvoltage induced on the pipeline during a short-circuit shall be effected. It may be necessary to determine appropriate measures (for example, an alternative routing for the cables or pipelines, or a greater clearance between cables and pipelines).

Where insulated cables cross or are near to telecommunication installations, an appropriate clearance shall be maintained between cables and telecommunication installations.

In the case of a long parallel routing, the overvoltage induced on the telecommunication installation during a short-circuit shall be calculated (for guidance refer to ITU recommendations). It may be necessary to take appropriate measures to reduce this overvoltage (alternative routing for the cables or the telecommunication installations, greater clearance between cables and telecommunication installations).

Where insulated cables cross or are near to other insulated cables, the mutual thermal effects shall be calculated in order to determine the minimum clearance between cables or to determine other appropriate measures (e.g. rerouting). Cables shall be installed at a sufficient distance from heat sources or shall be separated from such heat sources by means of thermal insulating shields.

Crossing and proximity of insulated cables, gas and water pipes or other pipes and appropriate clearance should be in compliance with national regulations and standards.

6.2.9.6 Installation of cables

Provision of suitable access shall be made for the maintenance and testing of cables (see Clause 11).

Licensed copy: Sukanya Arayangkoon, The Electricity Generating Authority of, Version correct as of 22/03/2022

The cable shall be protected from mechanical damage during and after installation as follows.

a) To avoid any damage to the cable, the laying operations shall be performed at the ambient temperature specified by the equipment standards or by the manufacturer.

b) Single-core insulated cables shall be laid and fastened in such a way as to ensure that the forces resulting from short-circuit currents do not cause damage.

c) The method of laying shall be chosen to ensure that the external effects are limited to acceptable safe values. In addition, when buried in troughs, the cables shall be installed at a specific depth and covered by slabs or a warning grid to prevent any damage being caused by third parties. Underground and submarine cables shall be mechanically protected where they emerge from the water or the soil.

d) Laying of cables in earth shall be carried out on the bottom of a cable trench free of stones. The bedding shall be in sand or soil, free of stones. Special constructions of cables can be chosen, if necessary, to protect against chemical effects.

e) Measures shall be taken to prevent cables in troughs from being damaged by vehicles running over them.

f) Ground movements and vibrations shall be taken into account.

g) For vertical installations, the cable suitable for that installation shall be supported by suitable cleats, at intervals determined by the cable construction, and information provided by the manufacturer.

h) If single-core cables are laid through reinforced ceilings and walls, the possibility of heating the steel reinforcing bars shall be considered. If necessary, suitable structural measures to limit the heating shall be determined.

Cables installed in metallic pipes shall be grouped in such a way that the conductors of all phases (and the neutral, if any) of the same circuit are laid in the same pipe to minimize eddy currents. The location of the earthing conductor shall be taken into account.

Insulated cables shall be installed so that touch voltages are within the permissible values, or so that accessible parts with impermissible touch voltages are protected against contact by adequate measures.

When earthing metallic screens and sheaths, consideration should be given to issues such as induced voltages, fault currents, transfer voltages and current transformer locations.

NOTE When earthing metallic screens and sheaths, there can be a risk of high circulating currents in screens of sheathed single-core cables, especially when laid flat.

Metallic sheaths shall be earthed in accordance with Clause 10.

The length of cable connecting transformers and reactors to a circuit shall be selected so as to minimize the occurrence of ferro-resonance.

When connecting power cables, the mechanical stress on electrical equipment shall be limited so as not to impair the property of the equipment.

6.2.9.7 Bending radius

The minimum values of bend radius during and after installation are dependent on the type of cable. These are given in the relevant standards or shall be specified by the manufacturer.

6.2.9.8 Tensile stress

The maximum permissible tensile stress during laying depends on the nature of the conductor and on the type of cable. These are given in the relevant standards or shall be specified by the manufacturer.

The continuous static and peak tensile stress applied to the conductors of flexible and trailing cables shall be as small as possible, and shall not exceed the values given by the manufacturer.

6.2.10 Conductors and accessories

Subclause 6.2.10 deals with conductors (rigid or flexible) and accessories, which are part of outgoing feeders or busbars in installations.

Covered conductors shall be treated as bare conductors.

Provision shall be made to allow for the expansion and contraction of conductors caused by temperature variations. This shall not apply where the stress caused by temperature variations has been allowed for in the conductor system design.

NOTE For bare flexible conductors outside closed electrical operation areas, see IEC 60826.

Joints between conductors and connections between conductors and electrical equipment shall be without defects and shall not deteriorate while in service. They shall be chemically and mechanically stable. The joint faces shall be suitably prepared and connected as specified for the type of connection. The temperature rise of a connection between conductors and switchgear in service shall not exceed the values specified in IEC 62271-1.

The open ends of tubular busbars should be plugged to prevent corrosion and birds nesting.

Provision shall be made to avoid possible resonant oscillation of tubular busbars caused by wind.

6.2.11 Rotating electrical machines

The risk of personal injury from faults within the terminal boxes of machines shall be minimized. The terminal boxes of motors shall withstand the local short-circuit conditions. Current-limiting devices may be necessary.

The degree of protection of the equipment against the ingress of objects, dust and water shall be chosen in accordance with the climatic and environmental conditions at the site of the electrical power installation. Hazardous parts of the machine shall be protected against accidental contact by persons. The degree of protection shall be defined in accordance with IEC 60529.

The insulation level of the machine shall be selected in accordance with IEC 60034-1.

Sufficient cooling shall be provided.

Machines can be protected against exceeding the maximum permitted temperature rise by use of suitable electric protective devices. Particularly for large machines or those critical for a production process, protection devices should be installed which indicate an internal fault of the machine or, if necessary, automatically shut it down.

The overall design of the installation shall identify requirements for the type of motor enclosure, particularly if the motor is to be installed in a hazardous area. In addition, safety issues such as noise levels, maximum temperature of surfaces accessible to operating persons, control of spillage and guarding, shall meet the particular requirements of the installation.

Starting large motors results in voltage drops in the electrical distribution system. Different techniques are available for reducing the impact on the electrical network when starting large motors. The protection equipment shall be designed to provide adequate protection of the motor during the complete starting sequence.

Licensed copy: Sukanya Arayangkoon, The Electricity Generating Authority of, Version correct as of 22/03/2022

The contribution of large motors to the short-circuit current shall be considered.

6.2.12 Generating units

The type of power rating for the generating unit shall be stated (e.g. continuous, prime, or standby power). Operation of the generator in parallel with the utility or in parallel with other generators should be stated. The switching devices to be used for synchronizing shall be defined.

The overall design shall identify the general safety requirements specific to the generating units, particularly for fire protection and use of hydrogen. See IEC 60034-3 .

6.2.13 Generating unit main connections

For small generating units, selection and specification of generator main connections (busbars) may be based upon appropriate provision of IEC 62271-200.

However, particular care should be taken in the selection of rated peak making currents. It may also be necessary to specify additional testing or calculations for connections that are not factory-built and type-tested.

Where necessary, fault studies shall be conducted to establish peak making and short-time withstand currents, particularly for branch connections of reduced cross-section (e.g. to auxiliary transformers).

For larger generating units, and where higher system security is required, it is recommended to use phase isolated or phase segregated busbar systems.

The impact of the magnetic field due to the use of generating unit main connections without metallic enclosures shall be considered in the design of the installation.

The design shall take into account the fact that when a generating unit is off line but rotating at low speed to prevent deformation of the generator shaft,

a) there is a possibility of induced voltages presenting a safety hazard, and
b) means shall be provided to change the off-circuit tap position on transformers connected directly to generator terminals.

When connections between the generator and the transformer are short, provision should be made to add capacitors in the connection gear to limit overvoltages which can occur during switching.

6.2.14 Static converters

Accessible parts of converter units that can carry dangerous voltage during normal operation or under fault conditions shall be adequately marked and shall be adequately protected against accidental contact by persons. This may be achieved by providing suitable protective barriers.

The cooling and heat transfer mediums shall not contain mechanical pollution or chemically aggressive components which might cause malfunction of the equipment.

When water is used as coolant, the possibility of corrosion caused by leakage currents (currents due to the conductivity of water) shall be considered.

When oil is used as coolant, similar protection against fire and pollution of ground water shall be provided as for oil-filled transformers and reactors.

Licensed copy: Sukanya Arayangkoon, The Electricity Generating Authority of, Version correct as of 22/03/2022

Licensed copy: Sukanya Arayangkoon, The Electricity Generating Authority of, Version correct as of 22/03/2022

When planning the layout of converter units, the possibility of magnetic interference, caused by high AC currents, on other electrical equipment or parts of the installation, especially steel components, shall be considered.

6.2.15 Fuses

Fuses shall be installed in such a way that their replacement can be carried out safely according to manufacturer's instructions.

All necessary information should be available to persons during operating and maintenance for the proper selection of replacement fuses.

There are two types of fuse in use:

– current-limiting fuses according to IEC 60282-1;

– expulsion fuses according to IEC 60282-2.

NOTE 1 More information concerning operational aspects can be found in IEC TR 62655.

For proper function, the fuse-link shall be securely locked in the service position.

NOTE 2 IEC TR 62655 states that it is advisable to replace all three fuse-links when the fuse-link on one or two phases of a three-phase circuit has operated, unless it is definitely known that no overcurrent has passed through the non-operated fuse-links.

Current limiting fuses according to IEC 60282-1 need no further observations due to their behaviour of current limiting and high breaking capacity during fault.

Installing expulsion fuses according to IEC 60282-2 minimum electrical clearances for fuse assembly installations shall take into consideration all possible positions of the live parts before, during and after operation. They shall be provided with adequate clearances or appropriate protective barriers in the direction or directions in which they are vented.

Discharges from vented fuses may contain hot gases, arc plasma and molten metal. They may also be conductive.

Facilities shall be provided to ensure that persons are not exposed to discharges of expulsion fuses according to IEC 60282-2, either during replacement or other working activities in the area. When this is not possible, the circuit feeding the fuse shall be de-energized prior to possible exposures, if not the persons shall use protective shielding and clothing.

6.2.16 Electrical and mechanical interlocking

Interlocking may be necessary to ensure the correct sequence of operation of electrical equipment, to prevent danger for operating persons and to prevent damage to the electrical equipment.

Interlocking may be achieved by electrical or mechanical methods. Interlocking shall be designed and constructed to operate reliably. In the event of the loss of power supplies, electrical interlocking schemes shall be designed to preserve safety in the case of failure.

7 Electrical power installations

7.1 General

7.1.1 Common requirements

Electrical power installations comprise installations within sites and can include one or more closed electrical operating areas.

Licensed copy: Sukanya Arayangkoon, The Electricity Generating Authority of, Version correct as of 22/03/2022

The access to closed electrical operating areas shall be restricted and only be possible by the opening or removal of a door, gate or protective barrier using a key or tool. Closed electrical operating areas shall be clearly marked by appropriate warning signs.

Clause 7 specifies only general requirements for the electrical power installations regarding choice of circuit arrangement, circuit documentation, transport routes, lighting, operational safety and labelling.

Distances, clearances and dimensions specified are the minimum values permitted for safe operation. They are generally based on the minimum values given in the former national standards of the IEC members. A user may specify higher values if necessary.

Clear and adequate space, as agreed between the user and supplier, shall be provided in front of all switchgear and fuses for safe operation, isolation and earthing. See, for example, 7.5.4.

For minimum clearances to live parts, refer to minimum clearance of danger zone (N) in 5.4 and to Table 2, Table 3 and Annex A.

National standards and regulations can require the use of higher clearance values.

Where an existing electrical power installation is to be extended, the requirements applicable at the time of its design and erection may be specified as an alternative.

NOTE When extending an existing installation, the requirements applicable to new parts can be subject to provincial, national or regional regulations.

The relevant standards for working and maintaining electrical power installations shall additionally be taken into account. Safe working procedures shall be defined by the user (see also Annex F).

7.1.2 Circuit arrangement

The circuit arrangement shall be chosen to meet operating requirements and to enable implementation of the safety requirements in accordance with 8.3. The continuity of service under fault and maintenance conditions, taking into account the network configuration, shall also be considered. The circuits shall be arranged so that switching operations can be carried out safely and efficiently.

Each electrically separated system shall be provided with an earth fault indicating device which permits detection or disconnection of an earth fault.

It shall be ensured that isolated sections of an electrical power installation cannot be inadvertently energized by voltage from parallel connected secondary sources (for example instrument transformers).

Isolating equipment accessible to the general public shall be capable of being locked.

Electrical power installations shall be capable of withstanding the thermal and dynamic stresses resulting from short-circuit current in accordance with Clause 4.

The circuit arrangement may, however, be configured in such a way that sections of the installation which are normally operated separately are interconnected for short periods during switching operations, even when, as a result of such connection, the short-circuit current exceeds the design rating for the electrical power installation. In such cases, suitable protective measures shall be taken to prevent danger for operating persons. Defined operating procedures may be required for this purpose.

NOTE 1 This situation occurs for example in operation if feeders are switched from one busbar to another.

In circuits that have current-limiting protective devices, electrical equipment and short connections may have ratings that correspond to the cut-off (let through) current of the current-limiting device.

NOTE 2 Electrical equipment located between the busbar and the current-limiting devices will have sufficient through-fault current duty only in case of faults on the load side of the current-limiting devices.

7.1.3 Documentation

Where applicable, the documentation shall be provided with each electrical power installation to allow erection, commissioning, operation, maintenance and environmental protection.

The extent and the language of the documentation shall be agreed upon between the supplier and user.

Rules for the preparation of documentation are given in IEC 61082-1.

7.1.4 Transport routes

Transport routes, their load capacity, height and width shall be adequate for movements of anticipated transport units and shall be agreed upon between the supplier and user.

Within closed electrical operating areas, the passage of vehicles or other mobile equipment beneath or in proximity to live parts (without protective measures) is permitted, provided the following conditions are met (see Figure 1):

– for a vehicle, with open doors and its loads, a minimum approach distance to live parts is $T = N$ + 100 mm (minimum 500 mm);
– the minimum height, H, of live parts above accessible areas is maintained (see 7.2.4).

Under these circumstances, persons may remain in vehicles or mobile equipment only if there are adequate protective measures on the vehicle or mobile equipment, for example the cab roof, to ensure that the danger zone defined above cannot be infringed.

For the lateral clearances between transport units and live parts, similar principles apply.

NOTE Height restrictions for vehicles can be indicated by the use of height restriction bars.

Licensed copy: Sukanya Arayangkoon, The Electricity Generating Authority of, Version correct as of 22/03/2022

Dimensions in millimetres

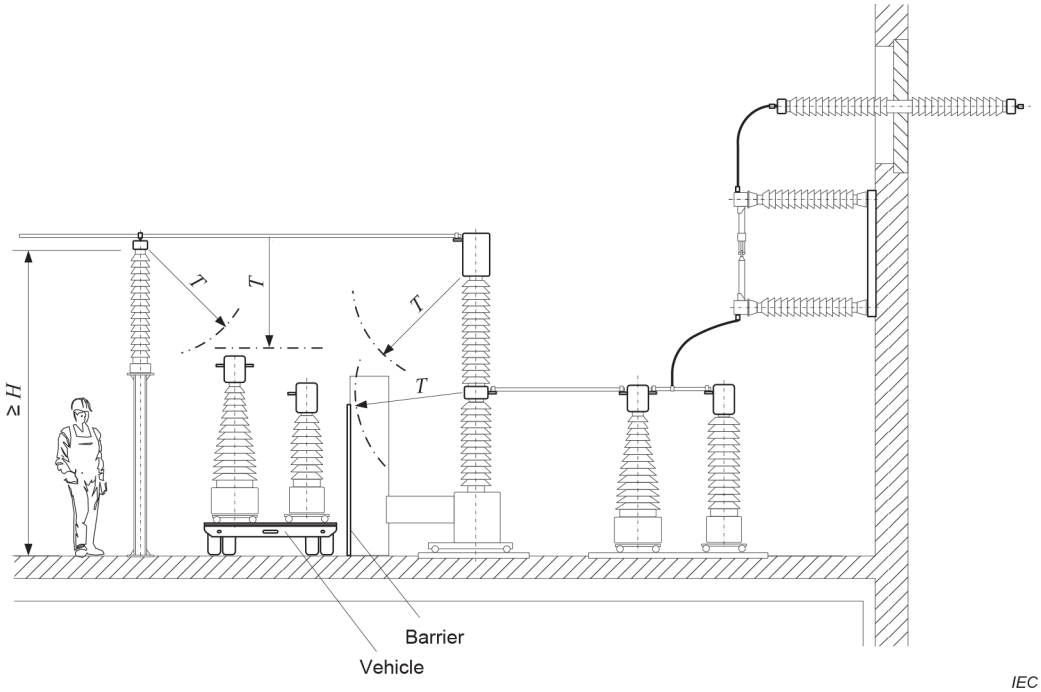

Indoor installation

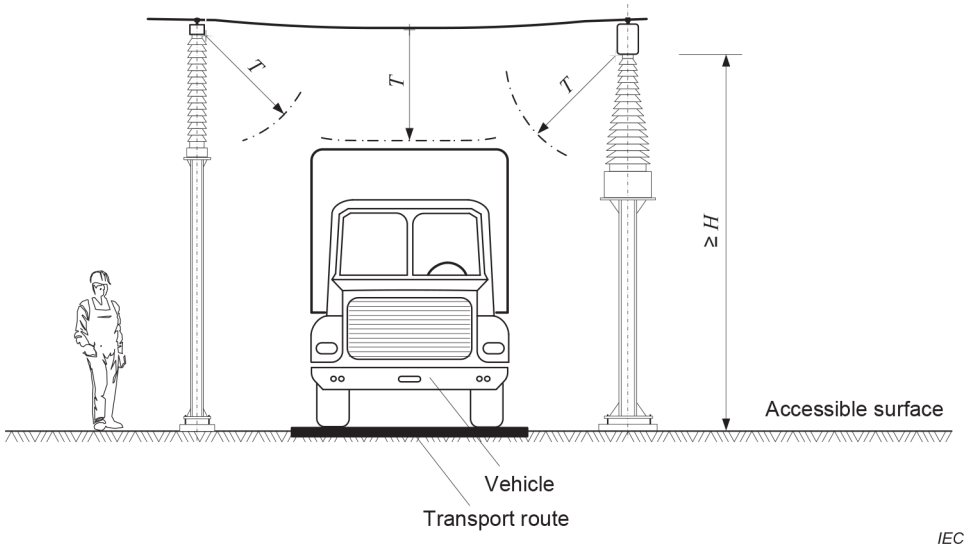

Outdoor installation

Key

H minimum height of live parts

N minimum clearance of danger zone

$T = N + 100$ (minimum 500)

Figure 1 – Minimum approach distance for transport within closed electrical operating areas

7.1.5 Aisles and access areas

The width of aisles and access areas shall be adequate for work, operational access, emergency access, emergency evacuation and for transport of equipment.

Licensed copy: Sukanya Arayangkoon, The Electricity Generating Authority of, Version correct as of 22/03/2022

NOTE Maintenance and operating areas in buildings are described in 7.5.4.

7.1.6 Lighting

Accessible indoor and outdoor electrical power installations shall be provided with suitable lighting for routine operations.

Emergency/auxiliary lighting shall be provided if necessary; this may be a fixed installation or portable electrical equipment.

In some cases, in small distribution substations, a lighting installation may not be required. In such cases, the presence and extent of the lighting shall be agreed upon between the supplier and user.

The lighting system shall be installed in such a way that its operation can be carried out safely.

NOTE For correct lighting levels (luminosity), applicable international and/or national standards and regulations can be consulted.

7.1.7 Operational safety

Operational safety of electrical power installations shall be designed so that the escape and rescue paths and the emergency exit can be safely used in the event of a fire, and that protection and environmental compatibility are ensured.

Where necessary, electrical power installations themselves shall be protected against fire hazard, flooding and contamination. If required, additional measures shall be taken to protect important installations against the effects of road traffic (salt spray, vehicle accident).

7.1.8 Labelling

Identification and labelling are required to avoid operating errors and accidents.

All important parts of the electrical power installation, for example switchgear 'bay' or 'cubicle', switchgear, busbars, conductors, shall be clearly, legibly and durably labelled.

Safety warnings, for example warning notices, safety instruction notices, operation of key-interlocking schemes and informative notices, shall be provided at suitable points in the electrical power installation (see 8.9).

Safety warnings may be provided wherever multiple sources of electrical power are required to be disconnected for the complete de-energization of electrical equipment or where equipment may be inadvertently back-fed.

7.2 Outdoor electrical power installations of open design

7.2.1 General

The layout of open type outdoor installations shall take into account the minimum phase-to-phase and phase-to-earth clearances given in Clause 5.

The design of the electrical power installation shall be such as to restrict access to danger zones, taking into account the need for operational and maintenance access. See Annex F. External fences shall therefore be provided and, where safety distances cannot be maintained, permanent protective facilities shall be installed. For electrical power installations on mast, pole and tower, external fences may not be required if the installation is inaccessible from ground level to the general public and meets the safety distances given in 7.7.

Licensed copy: Sukanya Arayangkoon, The Electricity Generating Authority of, Version correct as of 22/03/2022

A separation shall be provided between bays or sections by appropriate distances, protective barriers or protective obstacles.

7.2.2 Protective barrier clearances

Within an electrical power installation, the following minimum protective clearances shall be maintained between live parts and the internal surface of any protective barrier (see Figure 2):

– for solid walls, without openings, with a minimum height of 1 800 mm, the minimum protective barrier clearance is $B_1 = N$;

– for wire meshes, screens or solid walls with openings, with a minimum height of 1 800 mm and a degree of protection of IPXXB (see IEC 60529), the minimum protective barrier clearance is $B_2 = N$ + 80 mm.

NOTE The degree IPXXB ensures protection against access to hazardous parts with fingers.

For non-rigid protective barriers and wire meshes, the clearance values shall be increased to take into account any possible displacement of the protective barrier or mesh.

7.2.3 Protective obstacle clearances

Within electrical power installations, the following minimum clearance shall be maintained from live parts to the internal surface of any protective obstacle (see Figure 2):

– for solid walls or screens less than 1 800 mm high, and for rails, chains or ropes, the minimum protective obstacle clearance is $O_2 = N$ + 300 mm (minimum 600 mm);

– for chains or ropes, the values shall be increased to take into account the sag.

Where appropriate, protective obstacles shall be fitted at a minimum height of 1 200 mm and a maximum height of 1 400 mm.

NOTE Rails, chains and ropes are not acceptable in certain countries.

Licensed copy: Sukanya Arayangkoon, The Electricity Generating Authority of, Version correct as of 22/03/2022

Dimensions in millimetres

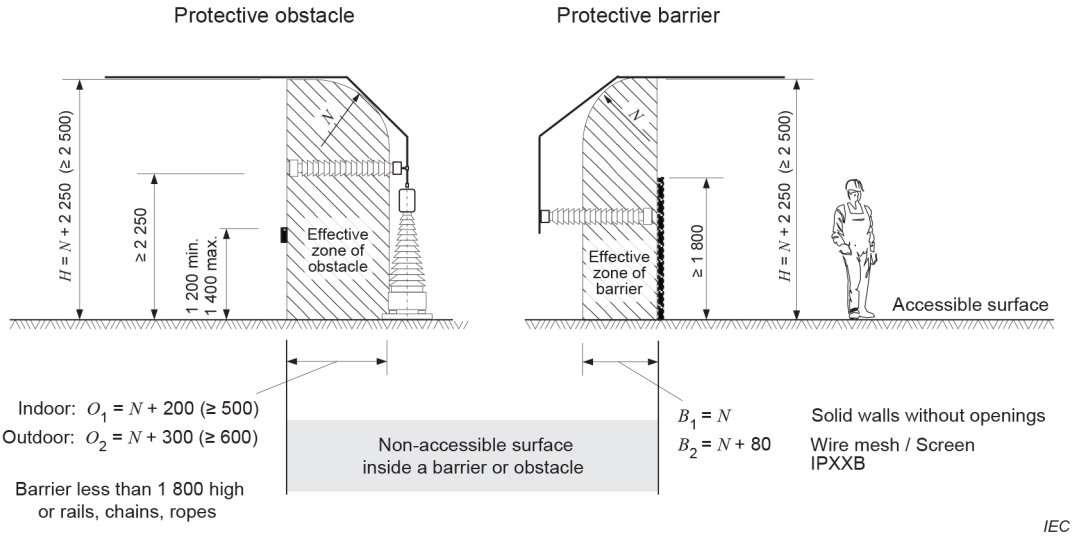

Key

H minimum clearance of live parts above accessible surface at the external fence

B_1 barrier clearance to solid walls without openings

B_2 barrier clearance to wire mesh/screen IPXXB

N minimum clearance of danger zone

O_1 obstacle clearance, indoor

O_2 obstacle clearance, outdoor

Figure 2 – Protection against direct contact by protective barriers or protective obstacles within closed electrical operating areas

7.2.4 Boundary clearances

The external fence of outdoor electrical power installations of open design shall have the following minimum boundary clearances in accordance with Figure 3:

– solid walls (for height, see 7.2.7): $C = N$ + 1 000 mm;

– wire mesh/screens (for height, see 7.2.7): $E = N$ + 1 500 mm.

Licensed copy: Sukanya Arayangkoon, The Electricity Generating Authority of, Version correct as of 22/03/2022

Dimensions in millimetres

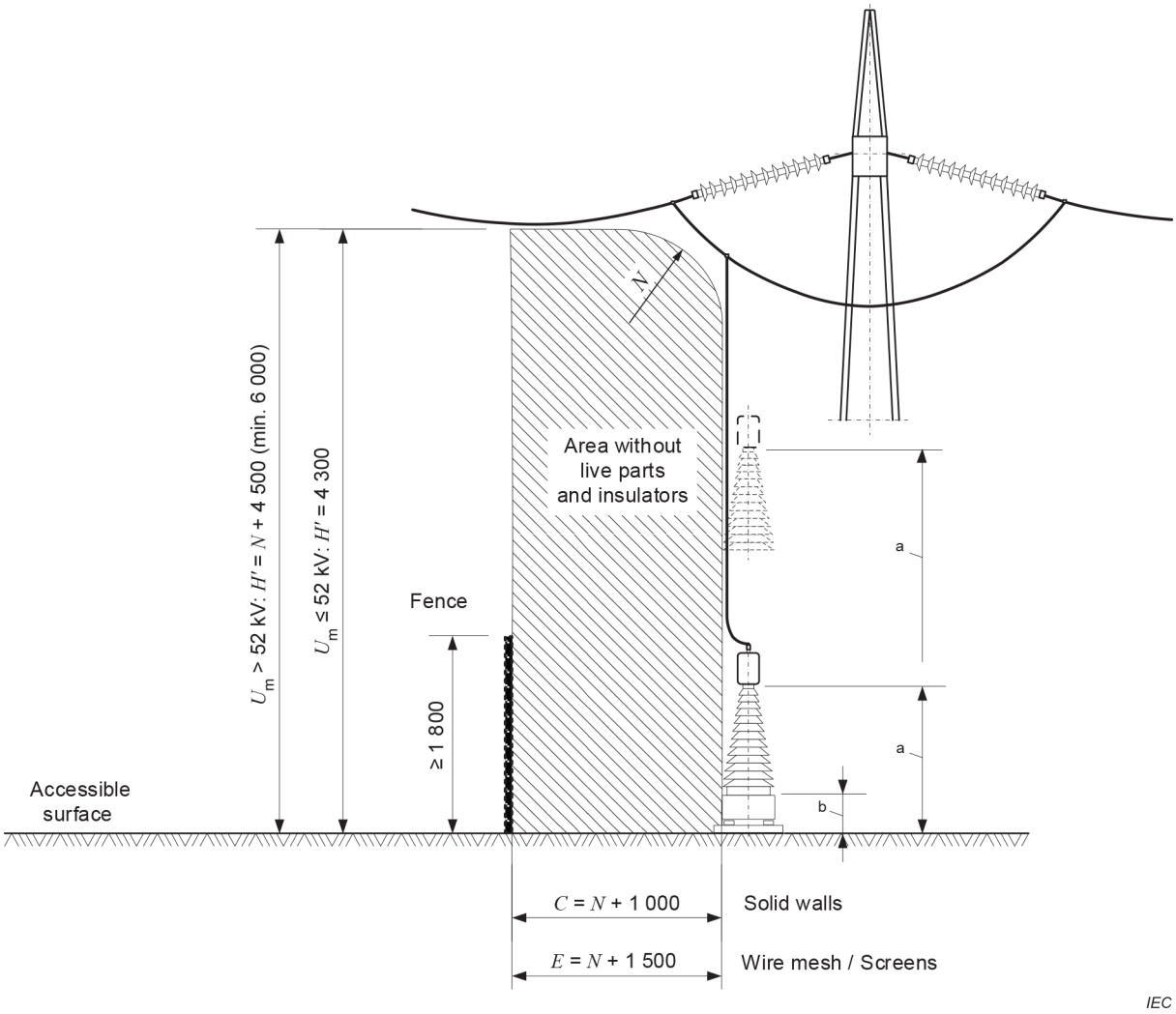

Key

C minimum distance from boundary to solid wall

E minimum distance from boundary to wire mesh or screens

H' minimum clearance of live parts above accessible surface at the external fence

N minimum clearance of danger zone

[a] If this distance to live parts is less than H (see 7.2.5), protection by barriers or obstacles shall be provided.

[b] If this distance is smaller than 2 250 mm, protection by barriers or obstacles shall be provided.

Figure 3 – Boundary distances and minimum height at the external fence/wall

7.2.5 Minimum height over access area

The minimum height of live parts above surfaces or platforms where only pedestrian access is permitted shall be as follows.

– For live parts without protective facilities, a minimum height H = N + 2 250 mm (minimum 2 500 mm) shall be maintained (see Figure 2, Figure 3 and Figure 4). The height H refers to the maximum conductor sag (see Clause 4).

– The lowest part of any insulation, for example the upper edge of metallic insulator bases, shall be not less than 2 250 mm above accessible surfaces unless other suitable measures to prevent access are provided.

Licensed copy: Sukanya Arayangkoon, The Electricity Generating Authority of, Version correct as of 22/03/2022

Where the reduction of safety distances due to the effect of snow on accessible surfaces needs to be considered, the values given above shall be increased.

Dimensions in millimetres

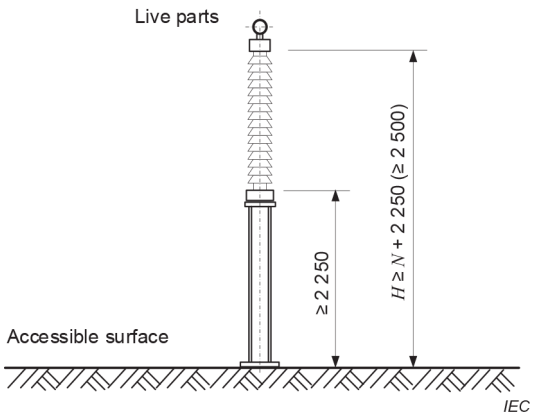

Key

H minimum clearance of live parts above accessible surface

N minimum clearance of danger zone

Figure 4 – Minimum heights within closed electrical operating areas

7.2.6 Clearances to buildings

Where bare conductors cross buildings which are located within closed electrical operating areas, the following clearances to the roof shall be maintained at maximum sag (see Figure 5):

– the clearances specified in 7.2.5 for live parts above accessible surfaces, where the roof is accessible when the conductors are live;

– N + 500 mm where the roof cannot be accessed when the conductors are live;

– O_2 in lateral direction from the end of the roof if the roof is accessible when the conductors are live.

Where bare conductors approach buildings which are located within closed electrical operating areas, the following clearances shall be maintained, allowing for the maximum sag/swing in the case of stranded conductors:

– outer wall with unscreened windows: minimum clearance given by W;

– outer wall with screened windows (screened in accordance with 7.2.2): protective barrier clearances B_2 in accordance with 7.2.2;

– outer wall without windows: N.

Licensed copy: Sukanya Arayangkoon, The Electricity Generating Authority of, Version correct as of 22/03/2022

Dimensions in millimetres

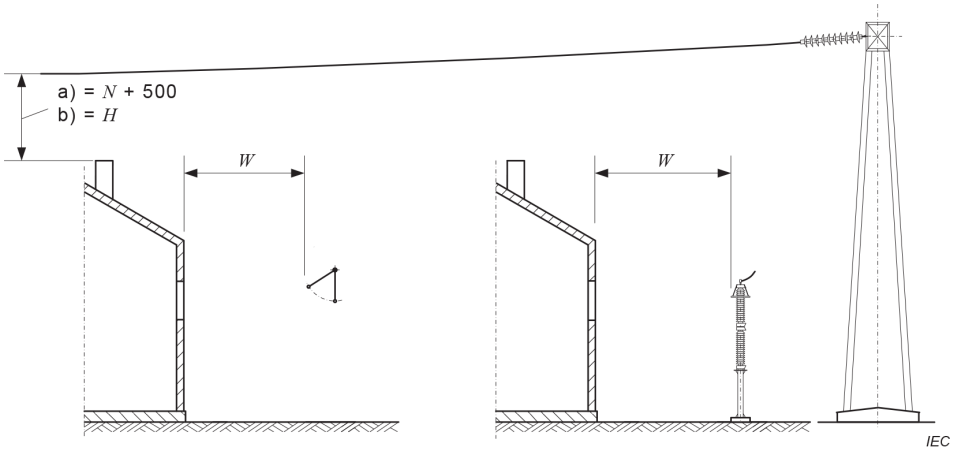

a) Outer wall with unscreened windows

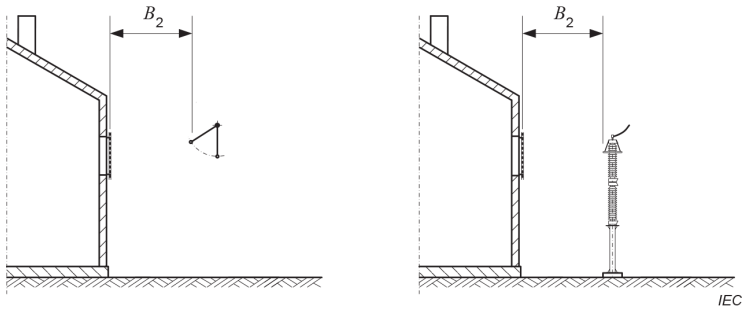

b) Outer wall with screened windows

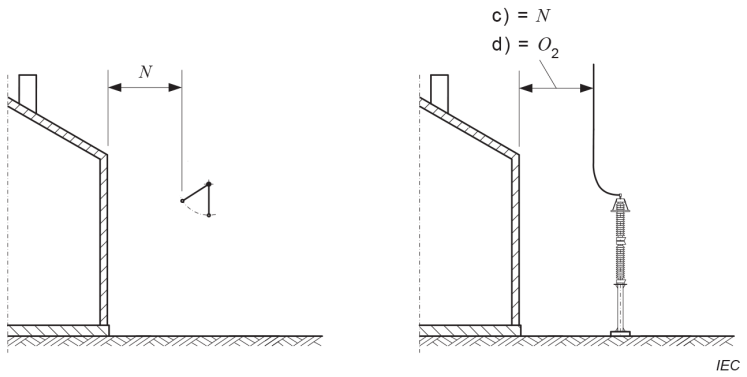

c) Outer wall without windows

Key

a) The roof cannot be accessed when the conductors are live.

b) The roof can be accessed when the conductors are live.

c) N if the roof is non accessible when the conductors are live.

d) $O_2 \geq N$ + 300 mm (minimum 600 mm) if the roof is accessible when the conductors are live.

$B_2 \geq N$ + 80 mm

$W = N$ + 1 000 for $U_m \leq$ 123 kV

$W = N$ + 2 000 for $U_m >$ 123 kV

H minimum height

N minimum clearance of danger zone

Figure 5 – Approaches with buildings within closed electrical operating areas

Licensed copy: Sukanya Arayangkoon, The Electricity Generating Authority of, Version correct as of 22/03/2022

Licensed copy: Sukanya Arayangkoon, The Electricity Generating Authority of, Version correct as of 22/03/2022

7.2.7 External fences or walls and access doors

Measures shall be taken to minimize the risk of unauthorized access to outdoor electrical power installations.

Where this is by means of external fences or walls, the height and construction of the fence/wall shall be designed to prevent climbing. Additional precautions may be required in some installations to prevent access by excavation beneath the fence.

Precautions may also be required in some installations to prevent adjoining climbing structures from reducing the protection of external fences or walls.

NOTE 1 Examples of such adjacent climbing structures are trees, external fences, other buildings, etc.

The external fence/wall shall be at least 1 800 mm high. The lower edge of a fence shall not be more than 50 mm from the ground (for clearances, see Figure 3).

Access doors to outdoor electrical power installations shall be equipped with security locks.

External fences/walls and access doors shall be marked with safety signs in accordance with 8.9.

In some cases, for public security reasons, additional measures may be necessary.

The degree of protection of IP1X (see IEC 60529) shall be used.

The use of metal mat fences with a mesh size of 50 mm × 200 mm (width × height) fulfils the requirement of IP1X.

7.3 Indoor electrical power installations of open design

The layout of open-type indoor installations shall take into account the minimum phase-to-phase and phase-to-earth clearances specified in Clause 5.

The design of the electrical power installation shall be such as to prevent access to danger zones taking into account the need of access for operational and maintenance purposes. Therefore, safety distances or permanent protective facilities within the installation shall be provided.

For protective clearances, safety distances and minimum height, see 7.2.

For buildings, corridors, escape routes, doors and windows, see 7.5.

For solid walls or screens less than 1 800 mm high, and for rails, chains or ropes, the protective obstacle clearances are at least:

– $O_1 = N$ + 200 mm (minimum 500 mm, see Figure 2).

For chains or ropes, the values shall be increased taking into account the sag. They shall be fitted at a minimum height of 1 200 mm to a maximum of 1 400 mm, where appropriate.

Licensed copy: Sukanya Arayangkoon, The Electricity Generating Authority of, Version correct as of 22/03/2022

7.4 Installation of prefabricated type-tested switchgear

7.4.1 General

Subclause 7.4 specifies additional requirements for electrical equipment which apply to external connections, erection and operation at the place of electrical power installation. The installation shall be dimensioned and designed to avoid danger to persons and damage to property, taking into account the type of installation and local conditions.

Factory-built, type-tested high voltage switchgear shall be manufactured and tested in accordance with relevant IEC standards such as IEC 62271-1, IEC 62271-200, IEC 62271-201 and IEC 62271-203.

NOTE In some countries, switchgear complying with IEC 62271-201 is considered to be an open type indoor electrical power installation.

The switchgear shall be well adapted to its purpose, clearly arranged and so designed that essential parts are accessible for erection, operation and maintenance. Arrangements and access shall be provided to permit assembly at site. Future possible extensions should be considered.

Appropriate arrangements shall be made for external connections. Conductors and cables shall be selected and arranged in such a way as to ensure safe insulation level between conductors and between each conductor and surrounding earthed metallic structures.

Safety devices that are intended to reduce the internal switchgear pressure resulting from a fault shall be designed and arranged with consideration for their potential hazard to persons. For arc faults, see also 8.5 and 8.8.3. For SF_6 leakage see 8.8.2.

7.4.2 Additional requirements for gas-insulated metal-enclosed switchgear

7.4.2.1 Design

If platforms and ladders are necessary for operation and maintenance, they shall be designed and arranged to provide safe access. These elements may be fixed or removable.

Where necessary, arrangements shall be made to protect the switchgear from dangerous vibrations from transformers/reactors with gas-insulated connections. Bellows shall be provided, where necessary, to allow for heat expansion, erection tolerances and settlement of foundations.

For electrical power installations with gas-insulated equipment, having several pressure chambers, clear labels shall be provided indicating the construction of the installation and the position of partitions. Monitoring devices shall be clearly marked and located to permit easy supervision.

Gas pipelines and fittings in areas where mechanical damage is expected shall be protected.

SF_6 gas pipelines shall be marked where there is a possibility of confusion with other pipelines.

7.4.2.2 Erection on site

Erection of GIS shall be carried out in a clean environment.

For outdoor electrical power installations, it may be necessary to provide a suitable temporary housing over the work area to protect the equipment from the environmental conditions whilst installation and/or maintenance is taking place.

For SF_6 gas handling, see 9.3.3.

For SF_6 leakage, see 8.8.2 and 8.8.3.

7.4.2.3 Protection against overvoltages

Protection of the GIS against overvoltages should normally be provided by the surge arresters installed on the feeders. In some cases, the protection given by this equipment may be inadequate. This situation arises mainly in the following configurations:

– large distance between the GIS and transformers;
– transformers connected to the GIS by means of cables;
– long busbars open at their ends;
– connection to overhead lines by means of insulated cables;
– locations with high probability of lightning strokes.

For these configurations, the installation of additional surge arresters may be required. Their location should be based on experience with similar situations or on calculations.

7.4.2.4 Earthing

The enclosure of a GIS shall be connected to the earthing system at least at the following points:

a) inside the bays:
   – close to the circuit-breaker;
   – close to the cable sealing end;
   – close to the SF_6/air bushing;
   – close to the instrument transformer;
b) on the busbars:
   – at both ends and at intermediate points, depending on the length of the busbars.

The three enclosures of a single-phase type GIS shall be bonded together with short connections and earthed at least at the end of the enclosure of the outgoing and incoming feeders. The bonding conductor shall either be rated to carry the nominal current of the switchgear 'bay' or 'cubicle' and busbars, or if a lower rated bonding conductor is used, then it shall be proved by tests that such a conductor is sufficient for safe operation.

Additional bonding straps are not required at flange joints if it can be ensured that the contact pressure of the flange provides adequate contact connection for high frequencies.

Earthing conductors of surge arresters for the protection of gas-insulated electrical power installations shall be connected to the enclosure with a connection which is as short as possible.

Metallic sheaths (for example metal enclosures, armoured coverings, screens) of cables with nominal voltages above 1 kV should be connected directly to the GIS enclosure.

In some special cases, e.g. cathodic protection of cables, it may be necessary to separate the earth connection of the cables from the GIS enclosure. In this case, the installation of a voltage surge protection device is recommended between the sealing end and enclosure.

Licensed copy: Sukanya Arayangkoon, The Electricity Generating Authority of, Version correct as of 22/03/2022

Licensed copy: Sukanya Arayangkoon, The Electricity Generating Authority of, Version correct as of 22/03/2022

7.5 Requirements for buildings

7.5.1 General

Buildings comply with national building codes and fire regulations. Where such national standards do not exist, the following may be used as a guide.

Subclause 7.5 indicates the requirements that have to be satisfied in areas or locations where electrical equipment for high-voltage installations is installed. For the purpose of this document, prefabricated substations covered by IEC 62271-202 are not considered as buildings.

7.5.2 Structural provisions

7.5.2.1 General

Load-carrying structural members, partition walls, claddings, enclosures, etc. shall be selected to withstand the expected combustible load.

Electrical operating areas shall be designed to prevent ingress of water and to minimize condensation.

Materials used for walls, ceilings and floors on the ground shall, where possible, not be damaged by water penetration or leakage. If this requirement cannot be met, precautions shall be taken to prevent the consequences of a leak or of condensation affecting the operating safety.

The building design shall take into account the expected mechanical loading and also internal pressure caused by an arc fault.

Other equipment such as pipelines, if allowed in substations, shall be designed so that the electrical power installation is not affected, even in the event of damage.

7.5.2.2 Specifications for walls

The external walls of the building shall have sufficient mechanical strength for the environmental conditions.

The mechanical strength of the buildings shall be sufficient to withstand all static and dynamic loads due to normal operation of the electrical power installation.

The passage of pipes or wiring systems shall not affect the structural integrity of the walls.

Metal parts that pass through walls shall meet the requirements of Clause 10.

Panels of the exterior surface of buildings that are accessible to the general public shall not be removable from the outside. The constituent materials of the external enclosures shall be capable of withstanding the attacks of atmospheric elements (rain, sun, aggressive wind, etc.).

7.5.2.3 Windows

Windows shall be designed so that entry is difficult. This requirement is considered fulfilled if one or more of the following measures are applied:

– the window is made of unbreakable material;
– the window is screened;
– the lower edge of the window is at least 1 800 mm above the access level;
– the building is surrounded by an external fence at least 1 800 mm high.

Licensed copy: Sukanya Arayangkoon, The Electricity Generating Authority of, Version correct as of 22/03/2022

7.5.2.4 Roofs

The roof of the building shall have sufficient mechanical strength to withstand the environmental conditions.

If the ceiling of the switchgear room is also the roof of the building for pressure relief, the anchoring of the roof to the walls shall be adequate.

7.5.2.5 Floors

The floors shall be flat and stable and shall be able to support the static and dynamic loads.

7.5.3 Rooms for switchgear

The dimensions of the room for switchgear and of the required pressure-relief openings depend on the type of switchgear and the short-circuit current.

If pressure-relief openings are necessary, they shall be arranged and situated in such a way that when they operate (blow out due to an arc fault) the danger to persons and damage to property is minimized.

7.5.4 Maintenance and operating areas

Maintenance and operating areas comprise aisles, access areas, handling passages and escape routes.

Aisles and access areas shall be adequately dimensioned for carrying out work, operating switchgear and transporting equipment.

Aisles shall be at least 800 mm wide.

The width of the aisles shall not be reduced even where equipment projects into the aisles, for example permanently installed operating mechanisms or switchgear trucks in isolated positions.

Space for evacuation shall always be at least 500 mm, even when removable parts or open doors, which are blocked in the direction of escape, intrude into the escape routes. If relevant, the doors of switchgear 'bay' or 'cubicle' should close in the direction of escape.

For erection or service access ways behind closed installations (solid walls), a minimum width of 500 mm is required.

Clear and safe access for operating persons shall be provided at all times.

Below ceilings, covers or enclosures, except cable accesses, a minimum height of 2 000 mm is required.

Exits shall be arranged so that the length of the escape route within the room does not exceed 40 m for installation of rated voltages U_{m} greater than 52 kV, and 20 m for installation of rated voltages up to U_{m} = 52 kV. This does not apply to accessible bus ducts or cable ducts. If the above distances of the escape route cannot be met, an agreement shall be made with the user.

Permanently installed ladders or similar are permissible as emergency exits in escape routes.

7.5.5 Doors

Access doors shall be equipped with security locks to prevent unauthorized entry.

Licensed copy: Sukanya Arayangkoon, The Electricity Generating Authority of, Version correct as of 22/03/2022

Access doors shall open outwards and be provided with safety signs in accordance with 8.9.

Doors which lead to the outside shall be of low flammability material, except where the building is surrounded by an external fence at least 1 800 mm high.

Doors between various rooms within a closed electrical operating area are not required to have locks.

It shall be possible to open emergency doors from the inside without a key by using a latch or other simple means, even when they are locked from the outside. This requirement need not be complied with for small installations where the door has to be kept open during operating or servicing.

The minimum height of an emergency door shall be 2 000 mm and the minimum clear opening 750 mm.

7.5.6 Draining of insulating liquids

Protective measures shall be taken when insulating liquids are used (see also 8.8).

7.5.7 Heating, ventilation and air conditioning (HVAC)

7.5.7.1 General

Suitable indoor conditions shall be provided to ensure correct operation of the electrical equipment (e.g. by adequate cooling, heating, dehumidifying, ventilation or by attention to the design of the building).

NOTE For precautions reducing pollution, condensation, temperature variation and humidity occurring in high-voltage substations, see Annex C of IEC TS 62271-304:2019.

Adequate ventilation shall be provided to dissipate heat generated by the electrical equipment.

Where natural ventilation is inadequate, additional measures shall be implemented. Mechanical ventilation systems (permanent or temporary) shall be designed to take smoke management into consideration. They shall be so arranged that inspection and maintenance can be carried out even when the electrical equipment is energized with consideration to location of equipment pressure-relief vents.

Monitoring of the operation of a permanent fan is recommended.

Ventilation openings shall be designed so as to prevent any dangerous proximity to live parts and any dangerous ingress of foreign bodies.

Coolants and heat transfer media shall not contain mechanical impurities or chemically aggressive substances in quantities or qualities which may be hazardous to the correct function of the electrical equipment in the electrical power installation.

Filters or heat exchangers shall be provided, if necessary.

Rooms containing high-voltage transformers and switchgear, located within public or residential buildings shall be provided with dedicated inlet and outlet ventilation ducts terminating outside the building.

Wherever possible, air intakes should be positioned remote from any potential source of atmospheric contamination.

Licensed copy: Sukanya Arayangkoon, The Electricity Generating Authority of, Version correct as of 22/03/2022

Facilities for air conditioning and ventilation shall not support fire propagation to other switchgear, transformers or facilities.

7.5.7.2 Ventilation of battery rooms

Rooms containing batteries shall take into account the ventilation requirements, if necessary, depending on battery types, to prevent the explosive build-up of combustible gas during battery charging.

7.5.7.3 Rooms for emergency generating units

Consideration should be given to installing emergency generating units in separate rooms.

Ventilation equipment shall be provided. Containment shall be provided to capture and control fuel or lubricating oil spills.

Engine exhaust systems shall be installed and located such that exhaust fumes shall not return to the ventilating air intake of the switchgear and control rooms, nor enter the air intake for the emergency generating unit.

7.5.8 Buildings which require special consideration

For electrical power installations located in public or residential buildings, existing standards or national regulations may exist for special conditions.

7.6 High voltage/low voltage prefabricated substations

For manufacturing and testing of prefabricated substations, see IEC 62271-202.

Compact substations shall be situated so that they are unlikely to be damaged by road vehicles. Adequate space for operating and maintenance purposes shall also be provided.

7.7 Electrical power installations on mast, pole and tower

The minimum height H' of live parts above surfaces accessible to the general public shall be:

– H' = 4 300 mm for rated voltages U_m up to 52 kV;

– H' = N + 4 500 mm (minimum 6 000 mm) for rated voltages U_m above 52 kV;

where N is the minimum clearance of danger zone (see Figure 3).

Where the reduction of safety distances due to the effect of snow on accessible surfaces needs to be considered, the values given above shall be increased.

Isolating equipment and fuses shall be arranged so that they can be operated without danger. Isolating equipment accessible to the general public shall be capable of being locked.

NOTE For portable operating rods or sticks, see the relevant standard, e.g. IEC 60832 (all parts) and IEC 60855-1.

Safe phase-to-phase connection and earthing of the overhead line shall be possible.

8 Safety measures

8.1 General

Electrical power installations shall be constructed in such a way as to enable operating and maintenance persons to circulate and intervene within the framework of the instructions and authorizations for the installation, at any point of the electrical power installation.

Specific maintenance work, preparation and repair work, which involve working in the vicinity of live parts or actual work on live parts, should be carried out observing the rules, procedures and work distances as defined in provincial, national or regional regulations.

8.2 Protection against direct contact

8.2.1 General

Electrical power installations shall be constructed so that unintentional touching of live parts or unintentional reaching into a dangerous zone near live parts is prevented.

Protection shall be provided for live parts, parts with functional insulation only and parts which can be considered to carry a dangerous potential.

Examples of such parts are as follows:

– exposed live parts;
– parts of installations where earthed metallic sheaths or conducting screens of cables have been removed;
– cables and accessories without earthed metallic sheaths or earthed conducting elastomeric screens, as well as flexible cables without conducting elastomeric screens;
– terminations and conducting sheathing of cables, if they can carry a dangerous voltage;
– insulating bodies of insulators and other such parts, for example electrical equipment insulated by cast resin, if a dangerous touch voltage can occur;
– frames or cases of capacitors, converters and converter transformers, which can carry a dangerous voltage during normal operation;
– windings of electrical machines, transformers and air-cored reactors.

Protection may be achieved by different means, depending on whether the electrical power installation is located in a closed electrical operating area or not.

When referred to in this document, the use of IP classification and testing methods according to IEC 60529 is extended to be used also for voltages above 72,5 kV.

8.2.2 Measures for protection against direct contact

8.2.2.1 Recognized protection measures

The following types of protection are recognized:

– protection by enclosure;
– protection by barrier;
– protection by obstacle;
– protection by placing out of reach.

8.2.2.2 Design of protective measures

Protective barriers can be solid walls, doors or screens (wire mesh) with a minimum height of 1 800 mm to ensure that no part of the body of a person can reach the dangerous zone near live parts.

Protective obstacles can, for example, be covers, rails, chains and ropes as well as walls, doors and screens which are less than 1 800 mm high and therefore cannot be considered as protective barriers.

Licensed copy: Sukanya Arayangkoon, The Electricity Generating Authority of, Version correct as of 22/03/2022

Licensed copy: Sukanya Arayangkoon, The Electricity Generating Authority of, Version correct as of 22/03/2022

Protection by placing out of reach is achieved by placing live parts outside a zone extending from any surface where persons can usually stand or move about, to the limits which a person can reach with a hand in any direction (see Clause 7).

Protective facilities used as a protective measure against direct contact, such as walls, covers, protective obstacles, etc., shall be mechanically robust and securely mounted.

Doors of switchgear 'bay' or 'cubicle' used as a part of an enclosure shall be designed so that they can be opened only by using a tool or a key. In areas outside closed electrical operating areas, these doors shall be provided with safety locks.

Movable, conductive protective facilities shall be secured so that when correctly used the relevant protective barrier or protective obstacle clearance is maintained; otherwise they shall be made of insulating material. A rail may be removed without the use of a tool. Protective rails shall be rigid.

In areas or rooms accessible to the public, protective facilities shall not be easily removable from outside with normal tools.

8.2.3 Protection requirements

8.2.3.1 Protection outside of closed electrical operating areas

Outside the closed electrical operating areas, only protection by enclosure or protection by placing out of reach is allowed.

When protection by enclosure is used, the minimum degree of protection shall be IP2XC.

As an exception, ventilation openings may be such that a straight wire cannot intrude into the electrical equipment in such a way that it causes danger by approaching parts needing to be protected from direct contact.

When protection by placing out of reach is used, the vertical clearances between accessible surfaces and the parts to be protected from direct contact shall be in accordance with 7.2.7 and 7.7.

8.2.3.2 Protection inside closed electrical operating areas

Inside closed electrical operating areas, protection by enclosure, protective barrier, protective obstacle or placing out of reach is allowed.

When protection by enclosure is used, the degree of protection shall meet the requirements of IP2X in minimum. However, special protection measures to meet danger resulting from arc faults may be necessary.

When protection by protective barrier is used, see 7.2.2.

When protection by protective obstacle is used, see 7.2.3 and 7.3.

When protection by placing out of reach is used, see 7.2.5 and 7.2.6.

NOTE For more detailed requirements on external fences, transport routes, crossings and access to buildings, etc., see Clause 7.

8.2.3.3 Protection during normal operation

The relevant standards for operation of electrical installations should be taken into account.

Licensed copy: Sukanya Arayangkoon, The Electricity Generating Authority of, Version correct as of 22/03/2022

Protection measures in an electrical power installation shall take into account the need for access for purposes of operation and control and maintenance, e.g.:

– control of a circuit-breaker or a disconnector;
– changing a fuse or a lamp;
– adjusting a setting value of a device;
– resetting a relay or an indicator;
– earthing for work;
– erection of a temporary insulating shutter;
– reading the temperature or oil level of a transformer.

In installations with U_m ≤ 52 kV, where doors or covers have to be opened in order to carry out normal operation or maintenance, it may be necessary to provide fixed non-conductive rails as a warning.

8.3 Means to protect persons in case of indirect contact

Measures to be taken for protection in case of indirect contact in order to protect persons are given in Clause 10.

8.4 Means to protect persons working on or near electrical power installations

8.4.1 General

Electrical power installations shall be constructed and installed to ensure that the measures necessary for the protection of persons working in or on electrical power installations can be employed. The relevant standards for operation and maintenance of electrical power installations shall also be taken into account. The working procedures shall be agreed upon between the supplier and user.

Whilst individual functions are considered in separate subclauses, these functions can be combined in a single item of equipment.

8.4.2 Electrical equipment for isolating installations or apparatus

Electrical equipment shall be provided by means of which the complete electrical power installation or sections thereof can be isolated, depending on operating requirements.

This may be achieved by disconnectors or switch disconnectors (see 6.2.1) or by disconnecting part of the installation, for example by removing links or cable loops. In the latter case, see 5.4.1.

Electrical power installations or parts of installations which can be energized from several sources shall be arranged so that all sources can be isolated from points of supply from which each section or part thereof can be made live.

If the neutral points of several pieces of electrical equipment are connected to a common neutral bus, it shall be possible to isolate each neutral point individually. This also applies to associated earth fault coils and resistors. Any required overvoltage protection shall be maintained in operational condition.

Where electrical equipment may be charged at some voltage following disconnection from the electrical power installation, for example capacitors, devices shall be provided to discharge the system/equipment.

Isolating gaps may only be bridged by insulators if leakage currents from the terminal on one side to the terminal on the other side are prevented.

Licensed copy: Sukanya Arayangkoon, The Electricity Generating Authority of, Version correct as of 22/03/2022

8.4.3 Devices to prevent reclosing of isolating devices

Suitable devices shall be provided to render inoperative the actuating force (i.e. spring force, air pressure, electrical energy) or the control of power mechanisms used for the operation of switchgear employed for isolating purposes.

NOTE 1 It is mandatory in certain countries that these devices are rendered inoperative by suitable locking facilities.

Where removable parts such as fuses or screw-in circuit breakers are used for complete disconnection and are replaced by screw caps or blank inserts, these caps or inserts shall be such that they can only be removed using a suitable tool.

Manually operated switches shall permit the use of mechanical locking devices in order to prevent reconnection to the system following isolation.

NOTE 2 Where locking of the manually operated switch is not practical, operating procedures can be applied to prevent reconnection to the system following isolation.

8.4.4 Devices for determining the de-energized state

Devices for determining that the electrical equipment is no longer energized shall be provided, where required, considering operational requirements. The extent of such provisions, wherever practicable, shall be agreed between the supplier and user.

All devices supplied shall permit the de-energized state to be checked at all points where activity is to be done that have previously been live, without danger for operational persons.

Either fixed equipment (see IEC 62271-206) or portable devices [see IEC 61243 (all parts)] can be used to meet this requirement.

8.4.5 Devices for earthing and short-circuiting

Each part of an electrical power installation that can be isolated from the system shall be arranged to enable it to be earthed and short-circuited.

Equipment (for example transformers or capacitors) shall be provided with a means of earthing and short-circuiting adjacent to the equipment. This requirement shall not apply to parts of a system where this is not practicable or is unsuitable (for example transformers or electrical machines with flange-mounted cable sealing ends or with cable connection boxes). In these cases, earthing and short-circuiting shall be effected by the application of circuit main earths at the associated switchgear 'bay' or 'cubicle' on the primary and secondary sides. Normally, it should be possible to earth and short-circuit all sides of a transformer, including neutrals.

The following shall be provided for or supplied as earthing and short-circuiting devices, with the scope being agreed between the supplier and user:

– earthing switches (preferably fault-making and/or interlocked);
– earthing switch trucks;
– earthing equipment integrated with other switching devices, e.g. circuit-breakers;
– non-guided earthing rods and short-circuiting equipment in accordance with IEC 61230;
– guided earthing rods and short-circuiting equipment in accordance with IEC 61219.

For each part of an electrical power installation, suitably dimensioned and easily accessible connection points shall be provided on the earthing system and on the live parts for connection of earthing and short-circuiting equipment. Switchgear 'bay' or 'cubicle' shall be designed so that connection of the earthing and short-circuiting equipment by hand to the earth terminal point can be carried out in accordance with the rules for carrying out work in the vicinity of live parts.

Licensed copy: Sukanya Arayangkoon, The Electricity Generating Authority of, Version correct as of 22/03/2022

When earthing and short-circuiting is achieved by remotely controlled earthing switches, the switch position shall be reliably transmitted to the remote control point.

When earthing is achieved through a load-breaking device having control circuits, all control circuits of the load-breaking device shall be made inoperative following the application of the circuit main earth. Inadvertent re-energization of the control circuits shall be prevented.

8.4.6 Equipment acting as protective barriers against adjacent live parts

8.4.6.1 General

All boundary elements such as walls, floors, etc. shall be constructed according to 7.2 or 7.3.

If walls or protective facilities do not exist, the separation to neighbouring switchgear 'bay' or 'cubicle' shall respect the appropriate distances.

Measures shall be provided to prevent entering into the danger zone if clearances cannot be maintained for the operation intended. If clearances cannot be maintained, the electrical power installation shall have the capability for insertable insulated obstacles or barriers to prevent reaching the danger zone with body parts, or equipment needed for operation intended shall be utilized.

8.4.6.2 Insertable insulated partitions

Insertable insulated partitions shall meet the following requirements:

a) the edges of insulating shutters shall not be located within the danger zone;

b) any gaps outside the danger zone shall be:
   – no more than 10 mm wide without limitation;
   – no more than 40 mm wide provided the distance from the edge of the shutter to the danger zone is at least 100 mm;
   – no more than 100 mm wide in the vicinity of disconnector bases.

Insertable insulated partitions used as protective barriers against live parts shall be part of the equipment or provided separately in accordance with operational requirements by agreement between the supplier and user.

Insertable insulated partitions shall be capable of being secured so that their position cannot be accidentally altered where this would lead to a hazardous condition.

Insertable insulated partitions used as protective barriers against live parts shall not touch or be in contact with live parts.

It shall be possible to install and remove insertable insulated partitions without persons being required to enter the danger zone.

NOTE This can be achieved by the type of insulating shutters (for example angled plate, associated insulating rods, suitable operating rods) or by the installation (for example guide rails).

8.4.6.3 Insertable partition walls

For electrical power installations without permanently installed partition walls, suitable insertable partition walls should be provided to isolate adjacent live switchgear 'bay' or 'cubicle' in accordance with the operational requirements. When required, the extent shall be agreed upon between the supplier and user.

Insertable partition walls which enter the danger zone during installation or removal, or which lie within the danger zone when fitted, shall meet the requirement for mobile insulating plates.

Licensed copy: Sukanya Arayangkoon, The Electricity Generating Authority of, Version correct as of 22/03/2022

Insertable insulated partition walls used as protective barriers against live parts shall not touch or be in contact with live parts.

8.4.7 Storage of personal protection equipment

If personal protection equipment is to be stored in the electrical power installation, a place shall be provided for this purpose where the equipment is protected from humidity, dirt and damage whilst remaining readily accessible to operational persons.

8.5 Protection from danger resulting from arc fault

Electrical power installations shall be designed and installed so that persons are protected as far as practical from arc faults during operation.

The following list of measures to protect against dangers resulting from arc fault shall serve as a guide in the design and construction of electrical power installations. The degree of importance of these measures shall be agreed upon between the supplier and user.

a) Protection against operating error, established, for example, by means of the following:
   - load break switches instead of disconnectors;
   - short-circuit rated fault-making switches;
   - interlocks;
   - non-interchangeable key locks.

b) Operating aisles as short, high and wide as possible (see 7.5).

c) Solid covers as an enclosure or protective barrier instead of perforated covers or wire mesh.

d) Electrical equipment tested to withstand internal arc fault instead of open-type equipment (e.g. IEC 62271-200, IEC 62271-203).

e) Arc products to be directed away from operating persons, and vented outside the building, if necessary. The design shall neither impair nor impede this function.

f) Use of current-limiting devices.

g) Very short tripping time; achievable by instantaneous relays or by devices sensitive to pressure, light or heat.

h) Operation from a safe distance, e.g. remote control.

i) Prevention of re-energization by use of non-resettable devices which detect internal electrical equipment faults, enable pressure relief and provide an external indication.

j) Minimization of impact to critical equipment.

8.6 Protection against direct lightning strokes

Different methods of analysis are available. The method to be used shall be agreed upon between the supplier and user.

The user shall select the level of protection to be achieved, depending on the reliability level required, and the protection method to be used.

NOTE 1 For calculation methods, see for example either Annex E or IEEE Guide 998.

Lightning rods and shield wires shall be earthed.

It is not necessary to equip a steel structure with a separate earthing conductor where it provides a suitable path for the lightning current itself.

Shield wires shall be connected to the steel structure or earthing conductor to ensure that the lightning current flows to earth. For buildings and similar structures, IEC 62305 (all parts) applies.

For associated standards, IEC 62305-4 should be referred to.

NOTE 2 For technical and economic reasons, damage resulting from lightning strokes cannot be fully prevented.

8.7 Protection against fire

8.7.1 General

Provincial, national or regional regulations normally exist regarding fire protection.

Fire hazard and fire risk of electrical equipment is separated into two categories: fire victim and fire origin. Precautions for each category should be taken into account in the installation requirements.

a) Precautions to fire victim:
   i) space separation from origin of fire;
   ii) flame propagation prevention:
      – physical layout of the substation,
      – liquid containment,
      – fire barriers (e.g. fire walls with fire resistance of minimum 60 minutes),
      – extinguishing system.
b) Precautions to fire origin:
   i) electrical protection;
   ii) thermal protection;
   iii) pressure protection;
   iv) non-combustible materials.

The user of the electrical power installation shall specify any requirements for fire extinguishing equipment. The precautions to personal safety depending on the fire suppression system shall be observed.

The escape and rescue paths and the emergency exits shall be usable in the event of fire (see 7.1.7).

The user of the electrical power installation shall specify any requirement for fire extinguishing equipment.

Automatic devices to protect against equipment burning due to severe overheating, overloading and faults (internal/external) shall be provided, depending on the size and significance of the electrical power installation.

Equipment in which there is a potential for sparks, arcing, explosion or high temperature, for example electrical machines, transformers, resistors, switches and fuses, shall not be used in operating area subject to fire hazard unless the construction of this equipment is such that flammable materials cannot be ignited by them.

If this cannot be ensured, special precautions, for example fire walls, fire-resistant separations, vaults, enclosures and containment, are necessary.

Consideration should be given to separating different sections of switchgear by fire walls. This can be achieved by means of bus ducts which penetrate the fire wall and which connect the sections of the switchgear together.

NOTE For prevention of fire propagation in ventilation, see 7.5.7. For low voltage equipment, guidance can be found in IEC TR 63054.

Licensed copy: Sukanya Arayangkoon, The Electricity Generating Authority of, Version correct as of 22/03/2022

Licensed copy: Sukanya Arayangkoon, The Electricity Generating Authority of, Version correct as of 22/03/2022

8.7.2 Transformers, reactors

8.7.2.1 General

In 8.7.2.1 to 8.7.2.6 the word 'transformer' represents 'transformers and reactors'.

For the identification of coolant types, see 6.2.2.

IEC 61039 classifies insulating liquids according to fire point and net calorific value (heat of combustion). IEC 60076-11 classifies dry-type transformers in terms of their behaviour when exposed to fire.

The fire hazard associated with transformers of outdoor and indoor electrical power installations is dependent on the rating of the equipment, the volume and type of insulating mediums, the type and proximity and exposure of nearby equipment and structures. The use of one or more recognized safeguard measures shall be used in accordance with the evaluation of the risk.

NOTE For definition of risk, see ISO/IEC Guide 51.

Common sumps or catchment tanks, if required, for several transformers shall be arranged so that a fire in one transformer cannot spread to another.

The same applies to individual sumps which are connected to the catchment tanks of other transformers; crushed stone layers, fire protection gratings or pipes filled with fluid can, for example, be used for this purpose. Arrangements which tend to minimize the fire hazard of the escaped fluid are preferred.

8.7.2.2 Outdoor electrical power installations

The layout of an outdoor electrical power installation shall be such that burning of a transformer with a liquid volume equal to or more than 1 000 l will not cause a fire hazard to other transformers or objects, with the exception of those directly associated with the transformer. For this purpose, adequate clearances, G_1 and G_2, shall be necessary. Guide values are given in Table 4. Where transformers with a liquid volume below 1 000 l are installed near walls of combustible material, special fire precautions may be necessary, depending on the nature and the use of the building.

If automatically activated fire extinguishing equipment is installed, the clearances G_1 and G_2 can be reduced.

The reduction of distances G_1 and G_2 shall be agreed upon between the supplier and user.

If it is not possible to allow for adequate clearance as indicated in Table 4, fire-resistant separating walls with the following dimensions shall be provided:

a) between transformers (see Figure 6) separating walls. For example EI 60:
   - height H: higher than or equal to top of the expansion chamber (if any), otherwise the top of the transformer tank;
   - length L: longer than or equal to longest part of the sump width/length (in the case of a dry-type transformer, the width or length of the transformer, depending upon the direction of the transformer);
b) between transformers and buildings separating walls. For example EI 60; if additional fire separating wall is not provided, fire rating of the building wall should be increased, for example REI 90 (see Figure 7).

NOTE 1 REI represents the bearing system (wall) whereas EI represents the non-load bearing system (wall) where R is the load bearing capacity, E is the fire integrity, I is the thermal insulation and 60/90 refers to fire resistance duration in minutes.

NOTE 2 Definitions of fire resistance are given in EN 13501-2 .

Table 4 – Guide values for outdoor transformer clearances

Transformer type	Liquid volume	Clearance G_1 to other transformers or building surface of non-combustible material	Clearance G_2 to building surface of combustible material
	l	m	m
Oil insulated transformers (O)	1 000 ≤ … < 2 000	3	7,5
	2 000 ≤ … < 20 000	5	10
	20 000 ≤ … < 45 000	10	20
	≥ 45 000	15	30
Less flammable liquid insulated transformers (K) without enhanced protection	1 000 ≤ … ≤ 38 000	1,5	7,5
	> 38 000	4,5	15

Less flammable liquid insulated transformers (K) with enhanced protection	Clearance G_1 to building surface or adjacent transformers	
	Horizontal m	Vertical m
	0,9	1,5

Dry-type transformers (A)	Fire behaviour class	Clearance G_1 to building surface or adjacent transformers	
		Horizontal m	Vertical m
	F0	1,5	3,0
	F1	None	None

a) Enhanced protection means
   - tank rupture strength,
   - tank pressure relief,
   - low-current fault protection,
   - high-current fault protection.

   For examples of enhanced protection, see FM Global Data Sheets 5-4, Property Loss Prevention and IEC 60076-13.

b) Sufficient space should be allowed for periodic cleaning of resin-encapsulated transformer windings, in order to prevent possible electrical faults and fire hazard caused by deposited atmospheric pollution.

c) Non-combustible materials may be chosen in accordance with EN 13501-1.

d) For transformer type "less flammable liquid insulated transformers (K) with enhanced protection" and "dry-type transformers (A)", the clearance G_1 is the minimum direct distance to building surfaces of either non-combustible or combustible materials.

Licensed copy: Sukanya Arayangkoon, The Electricity Generating Authority of, Version correct as of 22/03/2022

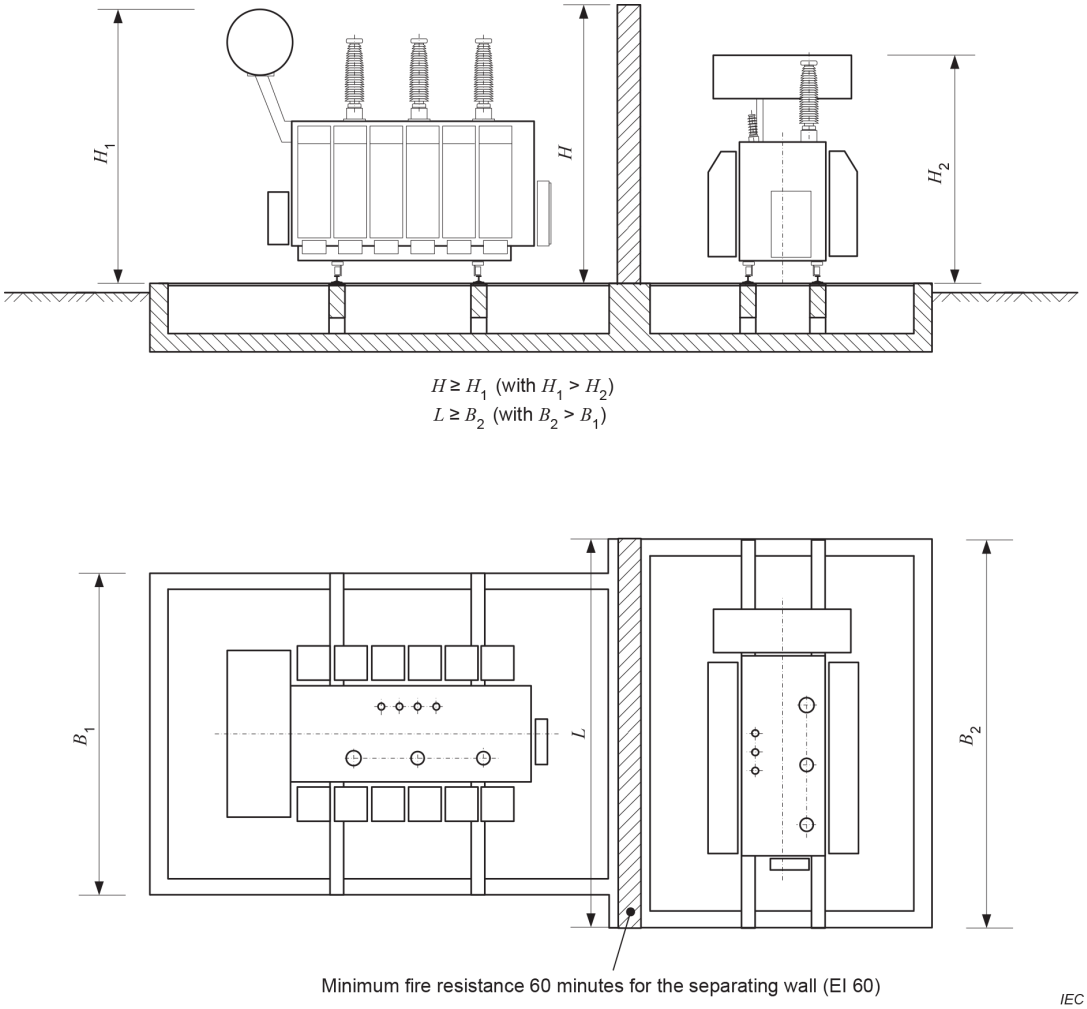

Key

B_1 Length of transformer sump

B_2 Width of transformer sump

H Height of fire-resistant separating wall

H_1 Height of the transformer expansion chamber (if any) or transformer tank of the higher transformer

H_2 Height of the transformer expansion chamber (if any) or transformer tank of the lower transformer

L Length of fire-resistant separating wall

Figure 6 – Separating walls between transformers

Licensed copy: Sukanya Arayangkoon, The Electricity Generating Authority of, Version correct as of 22/03/2022

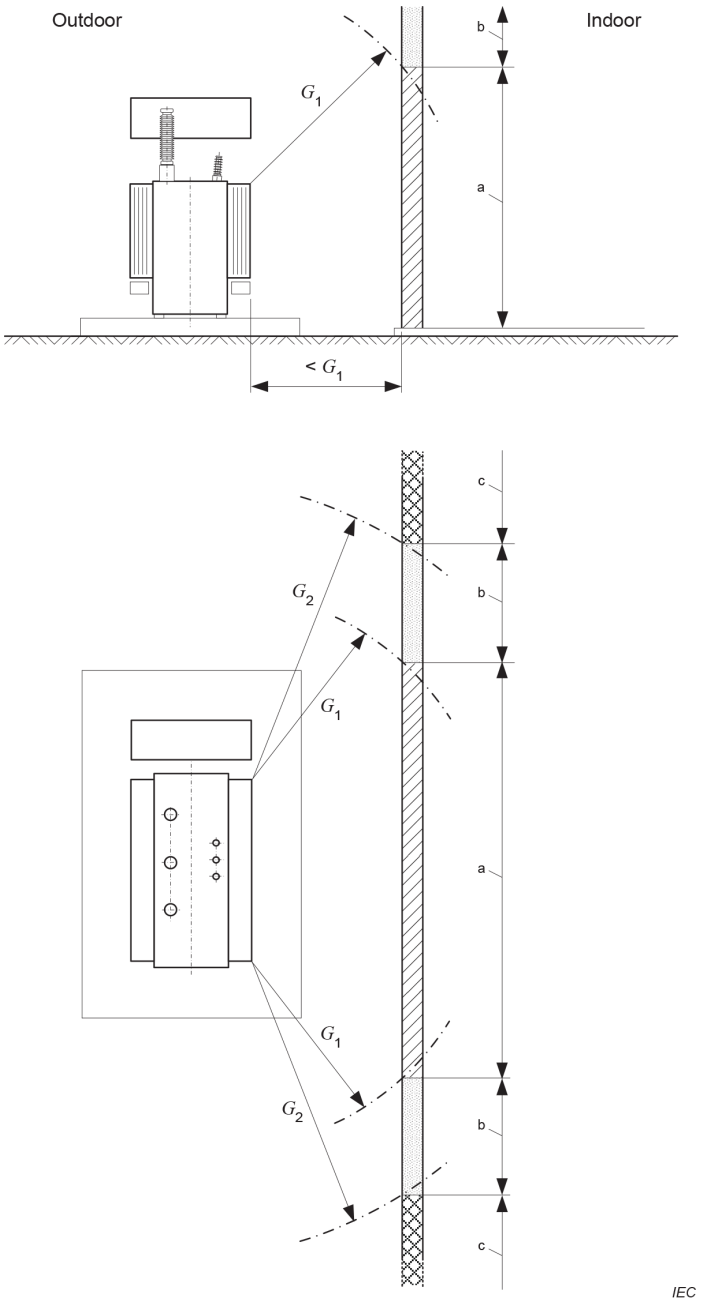

a) Fire protection between transformer and building surface of non-combustible material

Licensed copy: Sukanya Arayangkoon, The Electricity Generating Authority of, Version correct as of 22/03/2022

Licensed copy: Sukanya Arayangkoon, The Electricity Generating Authority of, Version correct as of 22/03/2022

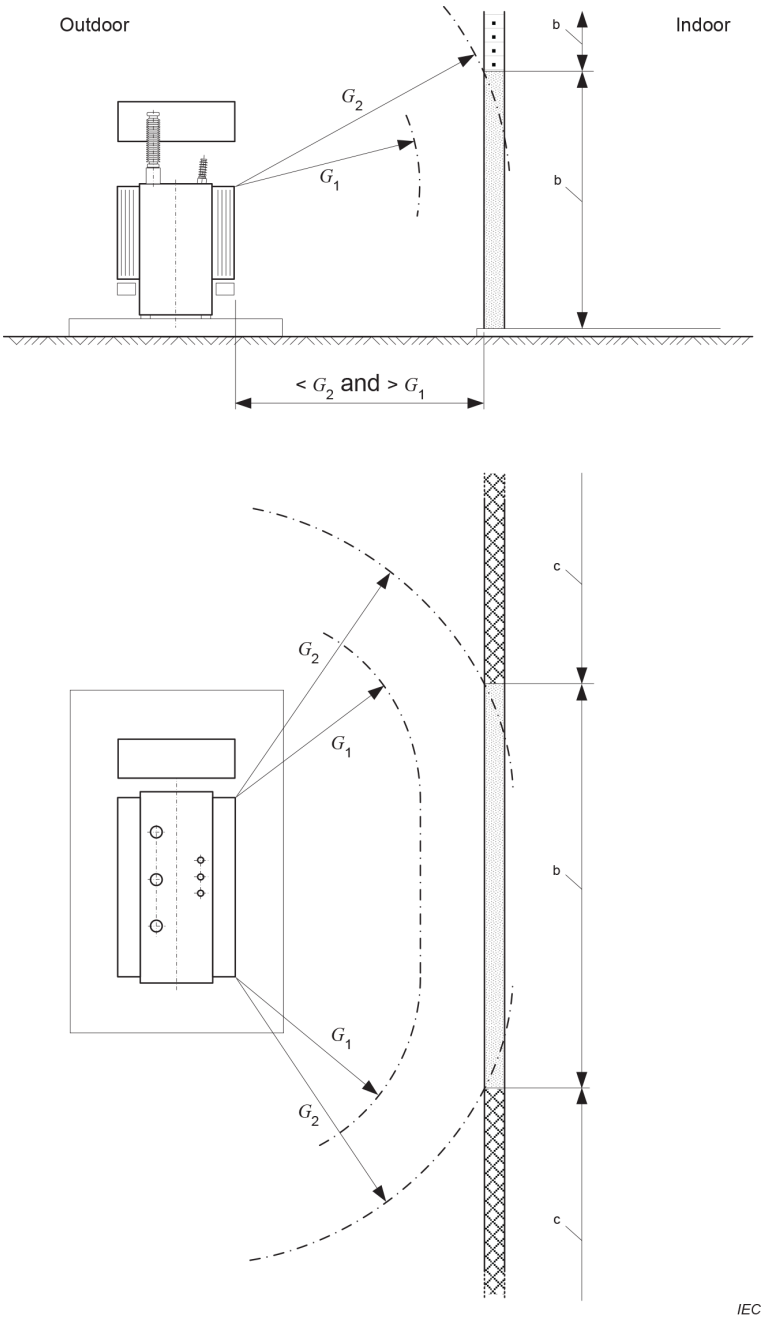

b) Fire protection between transformer and building surface of combustible material

Key

G_1	Clearance to other transformers or building surface of non-combustible material, see Table 4
G_2	Clearance to building surface of combustible material, see Table 4
Sector a	The wall in this area is designed with a minimum fire resistance of 90 minutes (REI 90)
Sector b	The wall in this area is designed with non-combustible materials
Sector c	No fire protection requirements

NOTE Due to the risk of vertical fire spread, sector c exists only in the horizontal direction.

Figure 7 – Fire protection between transformer and building

Licensed copy: Sukanya Arayangkoon, The Electricity Generating Authority of, Version correct as of 22/03/2022

8.7.2.3 Indoor electrical power installation in closed electrical operating areas

Minimum requirements for the electrical power installation of indoor transformers are given in Table 5.

Table 5 – Minimum requirements for the installation of indoor transformers

Transformer type	Class	Safeguards
Oil insulated transformers (O)	Liquid volume	
	< 1 000 l	EI 60 / REI 60
	1 000 l ≤ ... < 5 000 l	EI 90 / REI 90 or EI 60 / REI 60 and fire extinguishing unit
	≥ 5 000 l	EI 120 / REI 120 or EI 90 / REI 90 and fire extinguishing unit
Less flammable liquid insulated transformers (K)	Nominal power/max. voltage	
Without enhanced protection	(no restriction)	EI 60 / REI 60 or automatic sprinkler protection
With enhanced protection	≤ 10 MVA and U_m ≤ 38 kV	EI 60 / REI 60 or separation distances 1,5 m horizontally and 3,0 m vertically
Dry-type transformer (A)	Fire behaviour class	
	F0	EI 60 / REI 60 or separation distances 0,9 m horizontally and 1,5 m vertically
	F1	Non-combustible walls

a) REI represents the bearing system (wall) whereas EI represents the non-load bearing system (wall) where R is the load bearing capacity, E is the fire integrity, I is the thermal insulation and 60/90 refers to fire resistance duration in minutes.

b) Definitions of fire resistance are given in EN 13501-2.

c) Enhanced protection means
   - tank rupture strength,
   - tank pressure relief,
   - low-current fault protection,
   - high-current fault protection.

   For an example of enhanced protection, see Factory Mutual Global standard 3990 and IEC 60076-13.

d) Sufficient space should be allowed for periodic cleaning of resin-encapsulated transformer windings, in order to prevent possible electrical faults and fire hazard caused by deposited atmospheric pollution.

Doors shall have a fire resistance of at least 60 minutes. Doors which open to the outside are adequate if they are of low flammability material. Ventilation openings necessary for the operation of the transformers are permitted in the doors or in adjacent walls. When designing the openings, the possible escape of hot gases shall be considered.

8.7.2.4 Indoor electrical power installations in industrial buildings

For all transformers in industrial buildings, fast-acting protective devices which provide immediate automatic interruption in the event of failure are necessary.

Transformers with coolant type O require the same provisions as in 8.7.2.3.

For all other liquid-immersed transformers, no special arrangements in respect of fire protection are required, except for the provisions for liquid retention in case of leakage and the provision of portable fire extinguishing apparatus suitable for electrical equipment.

Dry-type transformers (A) require the selection of the correct fire behaviour class depending on the activity of the industry and on the material present in the surroundings. Fire extinguishing provisions are advisable, particularly for class F0.

NOTE For all transformers in industrial buildings, additional fire precautions can be necessary, depending on the nature and use of the building.

8.7.2.5 Indoor electrical power installations in buildings which are permanently occupied by persons

Provincial, national or regional fire protection regulations may exist for special conditions in public or residential buildings.

8.7.2.6 Fire in the vicinity of transformers

If there is an exceptional risk of the transformer being exposed to external fire, evaluation shall be given to:

– fire-resistant separating walls;
– gas-tight vessels capable of withstanding the internal pressure generated;
– controlled release of the hot liquid;
– fire extinguishing systems.

8.7.3 Cables

The danger of the spread of fire and its consequences shall be reduced, as far as possible, by selecting suitable cables and by the method of installation.

The cables shall be assessed by reference to the following categories:

– cables without particular fire performance characteristics;
– cables (single) with resistance to flame propagation [IEC 60332 (all parts)];
– cables (bunched) with resistance to flame propagation [IEC 60332 (all parts)];
– cables with low emission of smoke (IEC 61034-1);
– cables with low emission of acidic and corrosive gases [IEC 60754 (all parts)];
– cables with fire-resisting characteristics (IEC 60331-21 or IEC 60331-1).

Cables in trenches and buildings shall be laid in such a way that the regulations regarding fire safety of the building are not adversely affected. For example, to avoid fire propagation, holes through which the cables go from one room to another shall be sealed with suitable material.

A physical separation or different routing of power circuits from the control circuits for high-voltage equipment is recommended if it is necessary to preserve the integrity of the latter as long as possible following damage to the power circuits.

Where necessary, a fire alarm and fire extinguishing systems shall be installed in cable tunnels and in cable racks in the basement of control buildings.

8.7.4 Other equipment with flammable liquid

For all electrical equipment, such as switchgear which contains more than 100 l of flammable liquid in each separate compartment, special fire precautions as specified for transformers may be necessary, depending on the nature and use of the electrical power installation and its location.

Licensed copy: Sukanya Arayangkoon, The Electricity Generating Authority of, Version correct as of 22/03/2022

Licensed copy: Sukanya Arayangkoon, The Electricity Generating Authority of, Version correct as of 22/03/2022

8.8 Protection against leakage of insulating liquid and SF_6

8.8.1 Insulating liquid leakage and subsoil water protection

8.8.1.1 General

Measures shall be taken to contain any leakage from liquid-immersed equipment so as to prevent environmental damage. Provincial, national or regional regulations may specify the minimum quantity of liquid contained in an equipment for which containment is required. As a guideline, where no provincial, national or regional regulations exist, containment should be provided around liquid-immersed equipment containing more than 1 000 l (according to IEEE 980, 2 500 l).

In all cases, local regulations should be taken into account and approvals obtained when required.

8.8.1.2 Containment for indoor equipment

In indoor electrical power installations, spills of insulating liquid may be contained by providing impermeable floors with thresholds around the area where the equipment is located or by collecting the spilled liquid in a designated holding area in the building (see Figure 8).

The volume of the insulating liquid in the equipment as well as any volume of water discharging from a fire protection system shall be considered when selecting height of threshold or volume of the holding area.

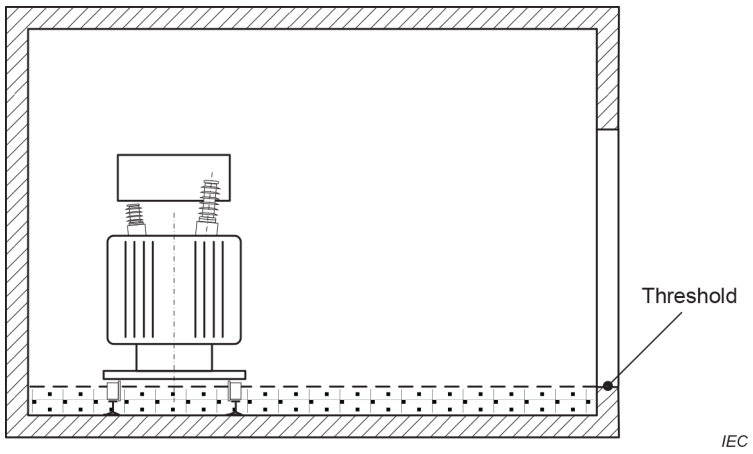

NOTE The dotted area denotes the volume of the entire quantity of insulating fluid of the transformer spilled on the floor.

Figure 8 – Example for small transformers without gravel layer and catchment tank

8.8.1.3 Containment for outdoor equipment

The quantity of insulating liquid in electrical equipment, such as transformer, the volume of water from rain and fire protection systems, the proximity to water courses and soil conditions shall be considered in the selection of a containment system.

NOTE 1 Containments (sumps) around liquid immersed equipment and/or holding tanks (catchment tanks) are extensively used to prevent escape into the environment of insulating liquid from equipment.

Containments and holding tanks, where provided, may be designed and arranged as follows:

– tanks;

– sump with integrated catchment tank for the entire quantity of fluid (Figure 9);

Licensed copy: Sukanya Arayangkoon, The Electricity Generating Authority of, Version correct as of 22/03/2022

– sump with separate catchment tank. Where there are several sumps, the drain pipes may lead to a common catchment tank; this common catchment tank shall then be capable of holding the fluids of the largest transformer (Figure 10);
– sump with integrated common catchment tank for several transformers, capable of holding the fluids of the largest transformer (Figure 11).

The walls and the associated pipings of sumps and catchment tanks shall be impermeable to liquid.

The capacity of the sumps/catchment tanks for insulating and cooling fluids shall not be unduly reduced by water flowing in. It shall be possible to drain or to draw off the water.

A simple device indicating the level of liquid is recommended.

Attention should be paid to the danger of frost.

The following additional measures shall be taken for protection of waterways and of ground water:

– the egress of insulating and cooling fluid from the sump/tank/floor arrangement shall be prevented (for exceptions, see 8.8.1.1);
– drained water shall pass through devices for separating the fluids; for this purpose, their specific weights shall be taken into account.

For outdoor electrical power installations, it is recommended that the length and width of the sump be equal to the length and width of the liquid-filled part of the transformer plus 20 % of the distance between the highest point of the transformer (including the conservator) and the upper level of the containment on each side.

NOTE 2 IEEE 980 recommends that the spill containment extends a minimum 1 500 mm beyond any liquid-filled part of the equipment.

NOTE 3 Examples of oil/water separator can be found in CIGRE Technical Brochure 537, Guide for Transformer Fire Safety Practices.

Provincial, national or regional legislation may exist.

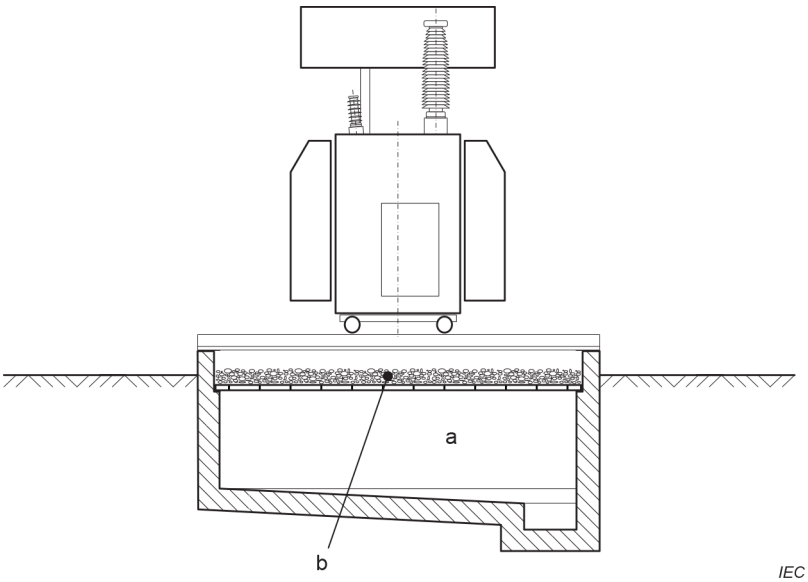

Key

a Containment: the entire quantity of fluid of the transformer plus water from rain and fire protection systems

b For information concerning fire protection gratings or fire blocking outlets, see 8.7.2

Figure 9 – Sump with integrated catchment tank

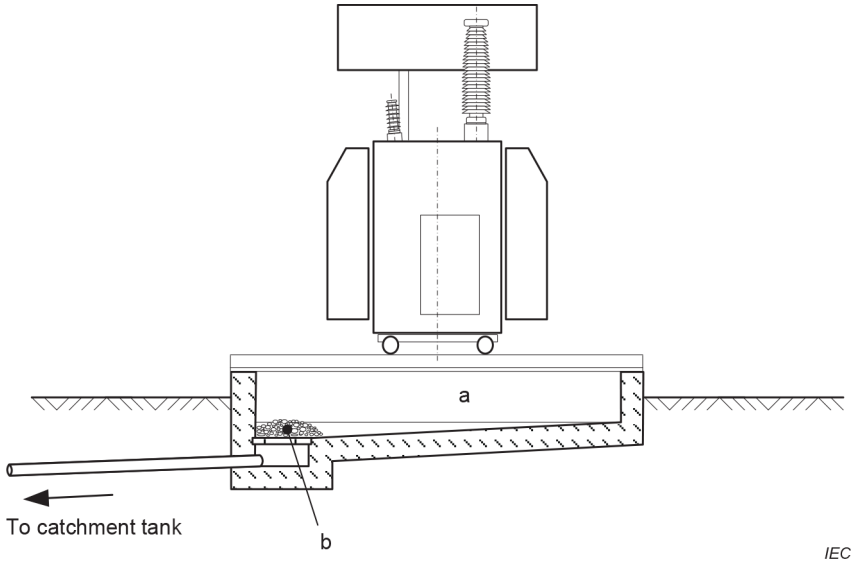

Key

a Containment: minimum 20 % of the fluid from the transformer

b For information concerning fire protection gratings or fire blocking outlets, see 8.7.2

Figure 10 – Sump with separate catchment tank

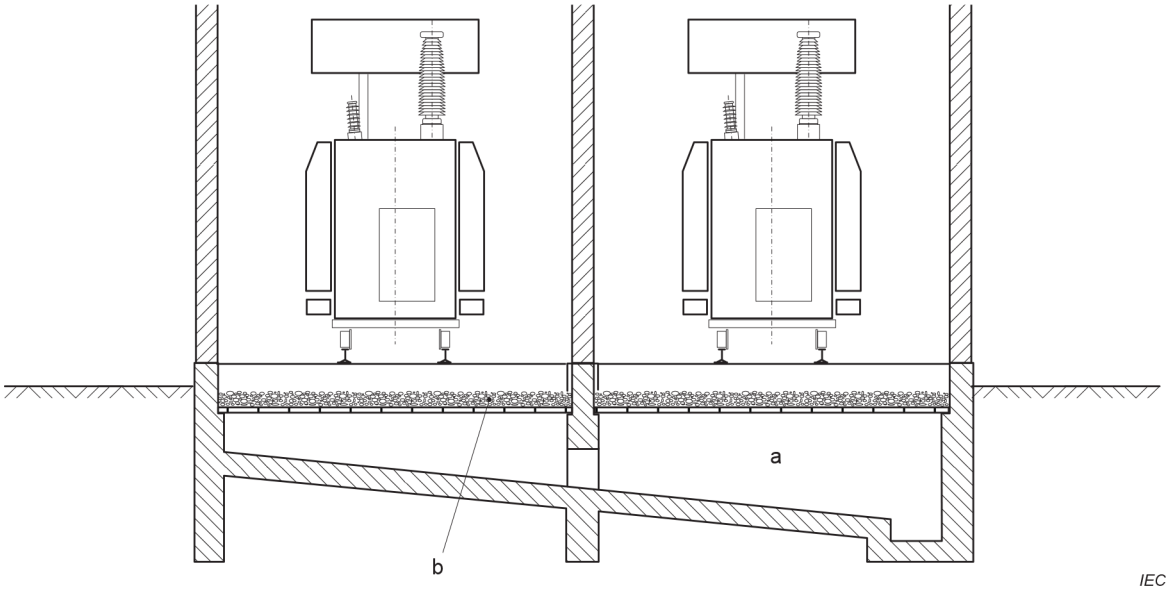

Key

a Containment outdoor: the entire quantity of fluid of the largest transformer plus water from rain and fire protection systems

Containment indoor: the entire quantity of fluid of the largest transformer

b For information concerning fire protection gratings or fire blocking outlets, see 8.7.2

Figure 11 – Sump with integrated common catchment tank

8.8.2 SF_6 leakage

Recommendations for use and handling of SF_6 gas are given in IEC 62271-4 and IEC 60376.

Licensed copy: Sukanya Arayangkoon, The Electricity Generating Authority of, Version correct as of 22/03/2022

Licensed copy: Sukanya Arayangkoon, The Electricity Generating Authority of, Version correct as of 22/03/2022

To cover the unlikely event of an abnormal leakage, ventilation shall be provided in the switchgear room and in other accessible locations where the accumulation of gas may present a hazard. In case of outdoor electrical power installation, no special precautions are needed.

In rooms with SF_6 equipment which are above ground, natural venting is sufficient if the gas volume of the largest compartment at atmospheric pressure does not exceed 10 % of the volume of the accessible switchgear room. If this demand cannot be fulfilled, mechanical ventilation shall be installed.

In rooms with SF_6 equipment which are below ground on all sides, mechanical ventilation shall be provided if gas quantities which pose an intolerable risk to the health and safety of persons are capable of collecting in terms of gas quantity versus size of the room.

Chambers, ducts, pits, shafts, etc., situated below SF_6 installation rooms and connected to them, shall have the possibility of being ventilated.

To guarantee that no thermal decomposition of SF_6 present in the atmosphere can occur, the following provisions shall be made:

– no parts of any equipment installed in the switchgear room which are in contact with air shall exceed a temperature of 200 °C;
– when filling of equipment is carried out during erection on site (not sealed systems), measures should be taken to prevent smoking, open fire and welding in the working areas.

For maximum SF_6 concentration, national regulations should be considered.

NOTE The use of other insulating gases is under consideration.

8.8.3 Failure with loss of SF_6 and its decomposition products

Recommendations for failures with loss of SF_6 and its decomposition products are given in IEC 62271-4 and IEC 60480.

NOTE Guidance has been issued by CIGRE Report 23-03.

8.9 Identification and marking

8.9.1 General

Clear identification and unambiguous marking in languages necessary for the operation of the electrical power installation shall be applied. This is to avoid incorrect operation, human error, accidents, etc. while operation and maintenance are carried out (see also 7.1.8).

The language of the identification and marking shall be agreed upon between the supplier and user.

For clear identification, installed electrical equipment may require more than one marking depending on its access, such as equipment with rear access.

Signs, boards and notices shall be made of durable and non-corrosive material and printed with indelible characters.

A single line diagram shall be easily accessible within the electrical power installation. In installations where a mimic diagram is visible from one single viewpoint and gives the equivalent information, a single line diagram is not necessary.

The operational state of switchgear and controlgear shall be clearly shown by indicators except when the main contacts can clearly be viewed by the operator.

Cable terminations and components shall be identified. Relevant details making identification possible in accordance with a wiring list or diagram shall be provided.

8.9.2 Information plates and warning plates

In closed electrical operating areas and in industrial buildings, all electrical equipment rooms shall be provided, on the outside of the room and on each access door, with necessary information identifying the room and pointing out any hazards.

The colours and contrasting colours shall comply with IEC standards. Provincial, national or regional legislation may exist.

8.9.3 Electrical hazard warning

All access doors to closed electrical operating areas, all sides of outer perimeter fences and masts, poles and towers with a transformer or switching device shall be provided with a warning sign.

The signs shall comply with IEC standards. Provincial, national or regional legislation may exist.

8.9.4 Electrical power installations with incorporated capacitors

The capacitors shall be provided with a warning label indicating the discharge time.

8.9.5 Emergency signs for emergency exits

Emergency exits shall be indicated by the appropriate safety warning sign. The signs shall comply with IEC standards. Provincial, national or regional legislation may exist.

8.9.6 Cable identification marks

The position where cables enter buildings should be identified. Identification marks shall not be placed on removable covers or doors that could be interchanged.

9 Protection, automation and auxiliary systems

9.1 Protection systems

The design of the electrical power installation shall include the selection and provision of protection systems for the correct and safe functioning of the system and to prevent damage, injury or loss of life, and disruption to electricity supply.

Consideration should be given for protection against the following effects:

– overcurrent, short-circuit and earth fault;
– overload and thermal effect;
– overvoltage;
– undervoltage;
– underfrequency.

Protection coordination studies shall be conducted as agreed between the supplier and user in order to determine the setting of protective devices. Back-up protection shall be considered for short-circuit protection and also for earth fault protection when clearing of earth faults is required.

Licensed copy: Sukanya Arayangkoon, The Electricity Generating Authority of, Version correct as of 22/03/2022

Licensed copy: Sukanya Arayangkoon, The Electricity Generating Authority of, Version correct as of 22/03/2022

Low-frequency conditions generally indicate power system problems. For installations supplied by a power system, low-frequency disconnection devices may be required in accordance with local regulations or power system requirements. For installations having their own independent power supply, consideration should be given to implementing load shedding to prevent total loss of power during disturbances.

Investigations shall be performed to determine possible overvoltages during operating conditions. Protection shall be installed where overvoltages may exceed tolerance limits of the installed electrical equipment.

The effects of undervoltages on the operation of electrical equipment shall be considered. Devices to detect undervoltages shall be provided where necessary in order to initiate automatic transfers to an alternative supply, or to disconnect the equipment to prevent incorrect operation or damage from occurring.

Integrated control and protection apparatus/equipment may be used provided that the protection functions are functionally independent of the control functions, i.e. failure or mal-operation of the control features will not impair operation of the protection system.

9.2 Automation systems

Monitoring, protection, regulating and control devices shall be provided, as necessary, for the correct and safe functioning of the electric system.

Automatic devices, designed to offer selectivity and quick operation, shall provide protection against the effects of unacceptable overload and internal and external faults appropriate to the size and significance of electrical power installation.

Electrical equipment of the automation system shall comply with the severity class defined in IEC 60255 (all parts)] corresponding to the part of the electrical power installation in which it is located.

Facilities shall be provided for isolating the control circuit of each primary switching equipment or each switchgear 'bay' or 'cubicle' in order to allow maintenance of high-voltage equipment to be performed safely.

Provision shall be made to allow for repair, maintenance, and/or testing to be carried out on protection and control devices without any danger to persons or the equipment.

Control circuits and signalling circuits shall, preferably, be functionally separated. Tripping signals shall be displayed on the protection panel if it exists.

Alarm and fault-indicating equipment shall clearly indicate danger and fault conditions; several signals can be combined as a common signal to be transmitted to a remote control point.

The control equipment and system, including cables and cords, shall be designed and installed to minimize the possibility of damage to the connected electrical equipment due to electro-magnetic interference. Basic rules are given in 9.4.

The control equipment and system, including cables and cords, shall be designed and installed in such a way that they minimize the danger from operating failure, inadvertent operation or incorrect information. In meeting this requirement, influences such as voltage dips, supply failure, insulation faults and electromagnetic interference effects shall be taken into account.

The actuating elements for the control of a switchgear shall be designed and installed in such a way that accidental actuation is avoided.

Licensed copy: Sukanya Arayangkoon, The Electricity Generating Authority of, Version correct as of 22/03/2022

Where a remote control is available, local/remote control selection shall be provided at the local operating position (i.e. at or in the close vicinity of the switches).

The control circuit of switching devices operated remotely or automatically shall be provided with suitable means near the device to prevent accidental operation during maintenance or repair.

When required, the monitoring and control system shall implement load shedding, emergency shut down, automatic transfer and network reconfiguration, motor re-acceleration and re-starting, etc. in order to maintain safe operating conditions during electrical system disturbances.

For safety reasons, it is recommended that hard-wired interfaces to process control equipment be designed such that maintenance of the process control circuits can be carried out without accessing high-voltage equipment, for example by using interposing relays installed in a separate cubicle.

9.3 Auxiliary systems

9.3.1 AC and DC supply circuits

9.3.1.1 General

Auxiliary power supply systems shall be designed for the permitted voltage fluctuation range and suitable power capacity which is required by the equipment for control and auxiliary systems.

Low-voltage AC and DC systems shall be designed in accordance with IEC 60364 (all parts).

Auxiliary distribution boards shall be provided to separate and protect the various auxiliary circuits.

A voltage loss or failure in the supply circuit should initiate a signal to a control location.

Auxiliary power supplies may be categorized into essential and non-essential groups. Essential supplies should be continuously available without any interruption, whereas non-essential ones may be subject to interruptions.

9.3.1.2 AC supply

For AC auxiliary power supplies belonging to the essential group, such as the supplies to a computerized control system, or the supplies to any electrical equipment whose interruption might cause a hazardous condition after a transient loss of power, the provision of a suitable UPS (uninterruptible power supply) is recommended.

Some equipment (e.g. SF_6-breaker heaters) may require the provision of changeover power supplies.

9.3.1.3 DC supply

DC supply units shall be capable of supplying power to all permanent DC loads and to the loads associated with essential operations. This may be achieved by choosing an appropriate number of independent units of sufficient capacities.

It is recommended that DC supply units such as batteries and chargers be provided with instruments for monitoring voltage and current.

DC batteries shall be sized to provide power for operation of an electrical power installation during total loss of AC station services.

Sizing of batteries shall be based on either the most probable duration of AC station services or the worst-case scenarios that might cause a total loss of AC station services (i.e. total blackout, fault on a major bus in the installation, etc.). This is subject to an agreement between the user and supplier. As a minimum, the DC batteries shall have enough capacity to trip breakers and switches at the beginning of the discharge period, to supply power to the continuous DC load and to close the elements of the installation that will restore AC services.

Battery banks with exposed live parts shall be kept in a room or cubicle accessible only to authorized persons.

Battery rooms or cubicles shall be dry and adequately ventilated to limit hydrogen accumulation. Allowable hydrogen levels and recommended number of air changes may be subject to provincial, national or regional legislation.

An easy means of escape from battery rooms shall be provided. Eyewash stations or personal protective equipment shall be provided, preferably located outside the battery room and close to the battery room door.

Battery banks shall preferably be isolated from control rooms to prevent the spread of fumes and to prevent accidental contact.

Where the risk of explosion cannot be avoided, explosion-protected equipment shall be used in accordance with IEC 60079-0.

The risk of explosion due to combustion of gas mixtures in the presence of an open flame or glowing parts shall be indicated by means of corrosion-resistant, legible signs of suitable size.

Notwithstanding the ventilation provided, rooms containing open type lead batteries shall be considered as locations with corrosive environments. Walls, ceilings and floors shall meet the requirements for protection against corrosion and gaseous products. Means shall be provided to prevent corrosive substances from entering any drainage systems.

9.3.2 Compressed air systems

Compressed air systems shall be designed to comply with the appropriate legislative rules regarding pressure vessels and pressurized systems.

Instruments and alarms shall be provided to ensure safe and reliable operation of the compressed air system.

The compressed air system shall be capable of providing air of relative humidity appropriate to the type and operating pressure of the electrical equipment to be supplied under all environmental conditions. Where necessary, drying equipment shall be provided.

Compressed air systems shall be designed so that water can be drained from all receivers or other points where it may collect during operation.

The compressed air system shall be designed to operate at its maximum and minimum capacity over the full range of environmental conditions to be expected for the associated switchgear and/or system. Adequate compressor cooling shall be provided as well as suitable protection to allow intermittent operation under freezing conditions.

Pressure vessels and pipelines shall be protected against corrosion internally and externally.

Licensed copy: Sukanya Arayangkoon, The Electricity Generating Authority of, Version correct as of 22/03/2022

The function of various components of the compressed air system shall be clearly indicated on this equipment. Different pressures shall be identified on pipework, vessels and diagrams by a method acceptable to the user.

The compressed air system shall be provided with sufficient points of isolation and drainage to allow sectionalization for maintenance in accordance with the operating and safety rules of the user.

Pipes which are permanently under pressure shall be protected against damage due to direct arcing.

All controls of the compressed air system which have to be used during operation shall be arranged so that they are safely accessible.

9.3.3 SF_6 gas handling plants

Where SF_6 gas has to be handled and retrieved, a SF_6 gas service unit shall be provided to transfer SF_6 gas to and from gas-filled electrical equipment in order to permit maintenance on the primary equipment. This SF_6 gas service unit shall be capable of evacuating and storing the largest quantity of gas specified and of evacuating the largest volume specified to the vacuum level and refilling to the highest filling pressure specified by the manufacturer. The design and capacity of the SF_6 gas service unit shall be determined by agreement between the supplier and user.

The SF_6 gas service unit shall also be capable of extracting air at atmospheric pressure from the largest volume specified to the vacuum level specified by the manufacturer. The gas service unit shall be capable of returning gas to the electrical equipment and recycling used gas through filters.

NOTE Guidance on handling of plants containing SF_6 is given in IEC 60480 and IEC 62271-4.

9.3.4 Hydrogen handling plants

The hydrogen-cooled generator, synchronous condenser or any other high-voltage equipment and its hydrogen cooling system shall be installed in the following way.

– The structure of the generator or synchronous condenser and its hydrogen cooling system shall be leak-tight and capable of preventing the mixture of hydrogen and air.
– The generator, synchronous condenser, hydrogen pipes, valves and other fittings in the hydrogen system shall be capable of withstanding the explosion of hydrogen at atmospheric pressure.
– The generator plant shall be provided with a device through which hydrogen gas can be purged to the open air safely when hydrogen leaks out from the generator shaft seal.
– A device capable of introducing hydrogen safely into the generator or synchronous condenser and also a device capable of expelling hydrogen safely out of the generator or synchronous condenser shall be installed.
– An instrument shall be provided which detects abnormal conditions of the electrical equipment and gives a warning.

9.4 Basic rules for electromagnetic compatibility of control systems

9.4.1 General

Subclause 9.4 deals with the protection of control circuits against electromagnetic interference. See also 4.2.10.

Licensed copy: Sukanya Arayangkoon, The Electricity Generating Authority of, Version correct as of 22/03/2022

Licensed copy: Sukanya Arayangkoon, The Electricity Generating Authority of, Version correct as of 22/03/2022

9.4.2 Electrical noise sources in electrical power installations

Interferences may be transmitted into electrical power installations by means of conduction, capacitive coupling, induction or radiation.

a) High frequency interferences are produced by
   - switching in primary circuits;
   - lightning strokes on overhead lines or on grounded components of electrical power installations;
   - operation of surge arresters, in particular those with air gaps;
   - switching in secondary circuits;
   - high frequency radio transmitters;
   - electrostatic discharges.

b) Low frequency interferences are produced by
   - short-circuits;
   - earth faults;
   - electromagnetic fields generated by equipment (busbars, power cables, reactances, transformers, etc.).

Protection against interference is based on two general principles:

– reduction of the penetration of electromagnetic fields into the electrical equipment;
– establishment of equal potential between every piece of equipment and the earthing system.

9.4.3 Measures to be taken to reduce the effects of high frequency interference

The recommendations listed below (non-exhaustive) will reduce the effects of high frequency electromagnetic interference:

a) suitable construction of instrument transformers (voltage transformers, current transformers), effective shielding between primary and secondary winding, testing of high frequency transmission behaviour;
b) protection against lightning strokes;
c) improvement of the earthing system and earthing connections (see 10.3.3);
d) shielding of secondary circuit cables:
   - shields should be continuous;
   - shields should have a low resistance (a few ohms per kilometre);
   - shields should have a low coupling impedance within the interference frequency range;
   - earthing of the shields should be as short as possible;
   - the shields should be earthed at both ends and intermediate points where possible;
   - the shields should be earthed at their entry to the control cabinets so that the currents circulating in the shields do not affect the unshielded circuits. Connections should preferably be circular by using suitable cable glands or a welding procedure;
e) grouping of circuits: in order to reduce the differential mode overvoltages, the incoming and outgoing wires associated to a same function should be grouped within the same cable. As far as possible, control cables should be segregated from other cables.

9.4.4 Measures to be taken to reduce the effects of low frequency interference

The recommendations listed below are the most important ones for reducing the effects of low-frequency electromagnetic interference.

a) Measures concerning cable laying:
   – separation of control cables from power cables by using spacing or different routes;
   – power cables in trefoil formation should be preferred to a flat formation;
   – as far as possible, cable routes should not be parallel to bus bars or power cables;
   – control cables should be laid away from inductances and single-phase transformers.
b) Measures concerning the circuit arrangement:
   – loops should be avoided;
   – for DC auxiliary supply circuits, a radial configuration is preferable to a ring configuration;
   – the protection of two different DC circuits by the same miniature circuit-breaker should be avoided;
   – parallel connection of two coils located in separate cubicles should be avoided;
   – all wires of the same circuit should be located in the same cable. When different cables have to be used, they should be laid in the same route.
c) Twisted pairs cables are recommended for low level signals.

9.4.5 Measures related to the selection of electrical equipment

The electrical power installation shall be divided into different zones, each of them corresponding to a specific class of environment.

In each zone, electrical equipment shall be selected in accordance with the associated class of environment.

Where necessary the following measures shall be taken in the internal circuitry of the control system:

a) metallic isolation of the I/O signal circuits;
b) installation of filters on auxiliary power supply circuits;
c) installation of voltage-limiting devices such as:
   – capacitor or RC circuits;
   – low voltage surge arresters;
   – zener diodes or varistors;
   – transient-voltage-suppression (TVS) diodes.

These devices shall be installed inside the protection and control equipment.

The following additional measures concern gas-insulated switchgear:

d) connection of concrete reinforcement grids to the earthing system at various points, especially in the floor (see Clause 10);
e) adequate earthing for power frequency and transient effects at the GIS/air-bushings and GIS-tubes. This is achieved by multiple connections between the enclosure and the building wall (to the reinforcement grid or metallic cladding) and multiple connections between the wall and earthing system;
f) adequate design and testing of secondary equipment concerning their immunity against electrical transients.

Licensed copy: Sukanya Arayangkoon, The Electricity Generating Authority of, Version correct as of 22/03/2022

Licensed copy: Sukanya Arayangkoon, The Electricity Generating Authority of, Version correct as of 22/03/2022

9.4.6 Other possible measures to reduce the effects of interference

The following recommendations supplement, when applicable, the measures listed in 9.4.5:

– installation of control cables in metallic cable ducts is recommended. Continuity and earthing of ducts should be ensured along their whole length;

– where possible, cables should be installed along metallic surfaces;

– optical fibre cables should be used with appropriate equipment.

10 Earthing systems

10.1 General

This Clause 10 provides the criteria for design, installation, testing and maintenance of an earthing system such that it operates under all conditions and ensures the safety of human life in any place to which persons have legitimate access. It also provides the criteria to ensure that the integrity of electrical equipment connected and in proximity to the earthing system is maintained.

10.2 Fundamental requirements

10.2.1 Safety criteria

The hazard to human beings is that a current will flow through the region of the heart which is sufficient to cause ventricular fibrillation. The current limit, for power-frequency purposes is derived from the appropriate curve in IEC 60479-1. This body current limit is translated into voltage limits for comparison with the calculated step and touch voltages taking into account the following factors:

– proportion of current flowing through the region of the heart;

– body impedance along the current path;

– resistance between the body contact points and, for example, metal structure to hand including glove, feet to remote ground including shoes or gravel;

– fault duration.

It shall also be recognized that fault occurrence, fault current magnitude, fault duration and presence of human beings are probabilistic in nature.

The earthing design parameters (relevant fundamental requirements, e.g. fault current, fault duration) shall be agreed between the supplier and user.

For electrical power installation design, the curve shown in Figure 12 is calculated according to the method defined in Annex B.

NOTE The curve is based on data extracted from IEC 60479-1:2018:

– body impedance from Table 1 of IEC 60479-1:2018 (not exceeded by 50 % of the population);

– permissible body current corresponding to the c_2 curve in Figure 20 and Table 11 of IEC 60479-1:2018 (probability of ventricular fibrillation is less than 5 %);

– heart-current factor according to Table 12 of IEC 60479-1:2018.

The curve in Figure 12, which gives the permissible touch voltage, should be used. Annex C shows the IEEE 80 curve which can be used as an alternative to the curve in Figure 12.

As a general rule, meeting the touch voltage requirements satisfies the step voltage requirements, because the tolerable step voltage limits are much higher than touch voltage limits due to the different current path through the body.

Licensed copy: Sukanya Arayangkoon, The Electricity Generating Authority of, Version correct as of 22/03/2022

For electrical power installations where high-voltage electrical equipment is not located in closed electrical operating areas, e.g. in an industrial environment, a global earthing system should be applied to prevent intolerable touch voltages.

10.2.2 Functional requirements

The earthing system, its components and bonding conductors shall be capable of distributing and discharging the fault current without exceeding thermal and mechanical design limits based on backup protection operating time.

The earthing system shall maintain its integrity for the expected electrical power installation lifetime with due allowance for corrosion and mechanical constraints.

Earthing system performance shall avoid damage to equipment due to excessive potential rise, potential differences within the earthing system and due to excessive currents flowing in auxiliary paths not intended for carrying parts of the fault current.

The earthing system, in combination with appropriate measures (e.g. potential control, local isolation) shall maintain step, touch and transferred potentials within the voltage limits based on normal operating time of protection relays and breakers.

The earthing system performance shall contribute to ensuring electromagnetic compatibility (EMC) among electrical and electronic apparatus of the high-voltage system in accordance with IEC TR 61000-5-2.

10.2.3 High and low voltage earthing systems

10.2.3.1 General

Where high- and low-voltage earthing systems exist in proximity to each other and do not form a global earthing system, part of the EPR from the HV system can be applied on the LV system. Two practices are presently used:

a) interconnection of all HV with LV earthing systems;

b) separation of HV from LV earthing systems.

In either case, the relevant requirements concerning step, touch and transfer potentials specified below shall be complied with within a substation and at an LV installation supplied from that substation.

Interconnection is preferred when practicable.

10.2.3.2 LV supply only within an electrical power installation

Where the LV system is totally confined within the area covered by the HV earthing system, both earthing systems shall be interconnected even if there is no global earthing system.

10.2.3.3 LV supply incoming to or outgoing from an electrical power installation

Full compliance is ensured if the earthing system of the electrical power installation is part of a global earthing system or connected to a multi-earthed HV neutral conductor in a balanced system. If there is no global earthing system, the minimum requirements of Table 6 shall be used to identify those situations where interconnection of earthing systems with low-voltage supply outside the high-voltage installation is feasible.

If high-voltage and low-voltage earthing systems are separate, the method of separating earth electrodes shall be chosen such that no danger to persons or electrical equipment can occur in the low-voltage installation. This means that step, touch and transfer potentials and stress voltage in the LV installation caused by a high-voltage fault are within the appropriate limits.

Licensed copy: Sukanya Arayangkoon, The Electricity Generating Authority of, Version correct as of 22/03/2022

10.2.3.4 LV in the proximity of an electrical power installation

Special consideration shall be given to LV systems which are located in the zone of influence of the earthing system of the electrical power installation.

For industrial and commercial installations, a common earthing system can be used. Due to the close proximity of equipment, it is not possible to separate earthing systems.

Table 6 – Minimum requirements for interconnection of low-voltage and high-voltage earthing systems based on EPR limits

Type of LV system [a, b]		EPR requirements		
		Touch voltage	Stress voltage [c]	
			Fault duration $t_f \leq 5$ s	Fault duration $t_f > 5$ s
TT		Not applicable	EPR ≤ 1 200 V	EPR ≤ 250 V
TN		EPR ≤ $F \times U_{Tp}$ [d, e]	EPR ≤ 1 200 V	EPR ≤ 250 V
IT	Distributed protective earth conductor	As per TN system	EPR ≤ 1 200 V	EPR ≤ 250 V
	Protective earth conductor not distributed	Not applicable	EPR ≤ 1 200 V	EPR ≤ 250 V

[a] For definitions of the type of LV systems, see IEC 60364-1.

[b] For telecommunication equipment, the ITU recommendations should be used.

[c] Limit may be increased if appropriate LV equipment is installed or EPR may be replaced by local potential differences based on measurements or calculations.

[d] The typical value for F is 2, indicating the touch voltage is 50 % of EPR. Higher values of F (up to 5) may be applied where there are additional connections of the PEN conductor to earth which therefore may reduce the touch voltage as a percentage of EPR. For certain soil structures, caution is necessary in soils with high contrast of top layer resistivity and underlying lower resistivity. In this case F is closer to 1 as the touch voltage can exceed 50 % of the EPR. If the PEN or neutral conductor of the low-voltage system is connected to earth only at the HV earthing system, the value of F shall be 1.

[e] U_{Tp} is derived from Figure 12.

10.3 Design of earthing systems

10.3.1 General

Design of an earthing system can be accomplished as follows:

a) data collection, e.g. earth fault current, fault duration and layout;

b) initial design of the earthing system based on the functional requirements;

c) determine if it is part of a global earthing system;

d) if not, determine soil characteristics e.g. of layers with different specific electric resistivity of soil;

e) determine the current flowing into earth from the earthing system, based on earth fault current;

f) determine the overall impedance to earth, based on the layout, soil characteristics, and parallel earthing systems;

g) determine earth potential rise;

h) determine permissible touch voltage;

i) if the earth potential rise is below the permissible touch voltage and the requirements of Table 6 are met, the design is complete;

j) if not, determine if touch voltages inside and in the vicinity of the earthing system are below the tolerable limits;

k) determine if transferred potentials present a hazard outside or inside the electrical power installation; if yes, proceed with mitigation at exposed location;

l) determine if low-voltage equipment is exposed to excessive stress voltage; if yes, proceed with mitigation measures which can include separation of HV and LV earthing systems;

Once the above criteria have been met, the design can be refined, if necessary, by repeating the above steps. Detailed design is necessary to ensure that all exposed-conductive-parts, are earthed. Extraneous-conductive-parts shall be earthed, if appropriate.

A flowchart of this design process is given in Annex D.

A structural earth electrode, if any, shall be bonded and form part of the earthing system. If not bonded, verification is necessary to ensure that all safety requirements are met.

Metallic structures with cathodic protection may be separated from the earthing system. Precautions, such as labelling, shall be taken to ensure that when such measures are taken, maintenance work or modifications will not inadvertently nullify them.

10.3.2 Power system faults

The objective is to determine the worst case fault scenario for every relevant aspect of the functional requirements, as these may differ. The following types of fault shall be examined at each voltage level present in the electrical power installation:

a) three phases to earth;

b) two phases to earth;

c) single phase to earth;

d) if applicable: phase to phase via earth (cross-country earth fault).

Faults within and outside the electrical power installation site shall be examined to determine the worst fault location.

10.3.3 Lightning and transient overvoltages

Lightning and switching operations are sources of high- and low-frequency currents and voltages. Surges typically occur when switching long cable sections, operating GIS disconnectors or carrying out back-to-back capacitor switching. Successful attenuation requires sufficient electrode density at injection points to the earthing system to deal with high-frequency currents, together with an earthing system of sufficient extent to deal with low-frequency currents. The HV earthing system shall form part of the lightning protection system and additional earthing conductors may be required at connection points between the lightning protection system and the earthing system.

Relevant electromagnetic compatibility and lightning standards shall be used to address specific aspects related to the transient performance of the earthing system and its components.

When an industrial or commercial electrical power installation includes more than one building or location, the earthing system of each shall be interconnected. Since during surges such as lightning strokes, there will be a large difference in potential between the earthing systems of each building and location in spite of the interconnection, measures shall be taken to prevent damage to sensitive electrical equipment connected between different buildings or locations. Where possible, non-metallic media, such as fibre optic cable, should be used for the exchange of low-level signals between such locations.

Licensed copy: Sukanya Arayangkoon, The Electricity Generating Authority of, Version correct as of 22/03/2022

Licensed copy: Sukanya Arayangkoon, The Electricity Generating Authority of, Version correct as of 22/03/2022

10.4 Construction work on earthing systems

Where construction work involves an existing earthing system, protective measures shall be taken to ensure the safety of persons during fault conditions.

10.5 Measurements

Measurements shall be carried out after construction, where necessary, to verify the adequacy of the design. Measurements may include the earthing system impedance, prospective touch and step voltages at relevant locations and transferred potential, if appropriate. When measuring touch and step voltages under test conditions, e.g current injection test, two choices are possible. Either measure the prospective touch and step voltages using a high impedance voltmeter or measure the effective touch and step voltages appearing across an appropriate resistance which represents the human body.

10.6 Maintainability

10.6.1 Inspections

The construction of the earthing system shall be carried out in a way that the condition of the earthing system can be examined periodically by inspection. Excavating at selective locations and visual inspection are appropriate means which shall be considered.

10.6.2 Measurements

Design and installation of the earthing system shall allow measurements to be carried out periodically or following major changes affecting fundamental requirements, or even for continuity tests.

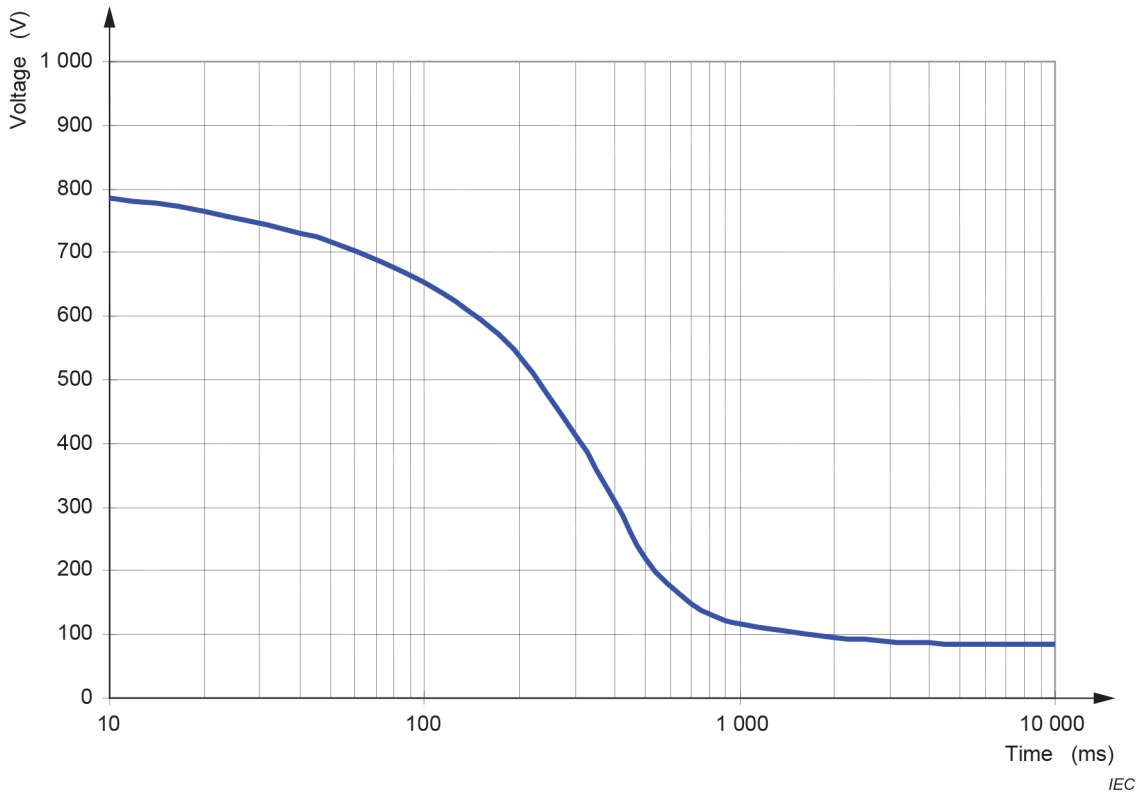

Figure 12 – Permissible touch voltage U_{Tp}

Licensed copy: Sukanya Arayangkoon, The Electricity Generating Authority of, Version correct as of 22/03/2022

11 Inspection and testing

11.1 General

Inspections and tests are carried out to verify compliance of the electrical power installation with this document and compliance of the electrical equipment with the applicable technical specifications.

The following shall be subject to agreement between the supplier and user:

– the extent of the inspection and testing;

– which specifications are applicable;

– the extent and type of documentation provided.

NOTE Specific tests on site for factory-built and type-tested equipment and for factory-built assemblies are provided in the relevant IEC product standards.

Verification may be achieved by the following methods:

a) visual inspections;

b) functional tests;

c) measuring.

Inspections and tests on parts of the electric power installations may be carried out after delivery as well as when the installation has been completed.

Typical activities that are usually carried out are, for example:

– verification of characteristics of the electrical equipment (including rated values) for the given operating conditions;

– verification of minimum clearances between live parts and between live parts and earth;

– power frequency voltage test for switchgear;

– voltage test for cables;

– verification of minimum heights and of protective barrier clearances;

– visual inspections and/or functional tests of electrical equipment and parts of installation;

– functional tests and/or measuring of protective, monitoring, measuring and controlling devices;

– inspection of markings, safety signs and safety devices;

– verification of correct fire ratings for buildings/enclosures;

– verification that emergency exits are operational;

– verification of the earthing system.

11.2 Verification of specified performances

Tests will, in general, be carried out on the various items of electrical equipment comprising an electrical power installation at appropriate stages of the contract to ultimately verify performance of the installation. The conditions and organization of the required tests shall be defined and agreed between the supplier and the user. This may include definition of the provision of site services, personnel, etc.

11.3 Tests during installation and commissioning

The requirements (methods and acceptance criteria) for tests during installation and commissioning together with a listing of the testing standards to be applied are the subject of agreement between the supplier and user. This may include functional tests to demonstrate the ability of the electrical equipment to satisfy the operational requirements, such as automatic start-up and shutdown.

The test equipment for demonstration of achievement of design requirements should be agreed between supplier and user.

A schedule of tests shall be prepared for components and systems to be tested during the installation and commissioning period. Details of the schedule are the subject of agreement between the supplier and user. The necessary services to allow the tests to be carried out should be agreed between the parties.

The contractual consequences of the outcome of the tests during installation and commissioning should be stated in the enquiry, where appropriate.

11.4 Trial running

The scope of work agreed between the supplier and user may include a trial run. The purpose of the trial run is to prove the functional capability of the electrical power installation. During the run, therefore, all significant components should be in operation.

The agreement should define under what circumstances a breakdown of a significant component constitutes an interruption of the trial. The user may also give exception criteria for breakdowns of a very short period, for example simply extending the period of the trial by the outage time.

The conditions that have to be met for the successful completion of the trial run should be defined in the enquiry.

The contractual consequences of the outcome of the trial run should be stated in the enquiry, where appropriate.

12 Operation and maintenance manual

Each electrical power installation should have an operation manual describing the normal, emergency, and maintenance procedures as well as safety instructions for the operation of the high-voltage electrical installation.

For the preparation of manuals and instructions, IEC/IEEE 82079-1 applies.

Information in form of instructions, diagrams, and data, shall be available to persons for operation, maintenance, in charge of work or working in electrical areas to ensure proper and safe control of electrical equipment and isolation for working. The information includes necessary manufacturer instructions for the electrical equipment in the installation.

Operating instructions should be site specific and narrative describing switching operation sequences, protection schemes including inter-tripping, and interlocking arrangements.

Emergency information, e.g. routes to the nearest hospital and emergency phone numbers should be displayed in a visible location in the electrical power installation.

Licensed copy: Sukanya Arayangkoon, The Electricity Generating Authority of, Version correct as of 22/03/2022

Licensed copy: Sukanya Arayangkoon, The Electricity Generating Authority of, Version correct as of 22/03/2022

Annex A
(informative)

Values of rated insulation levels and minimum clearances based on current practice in some countries

Table A.1 – Values of rated insulation levels and minimum clearances in air for 1 kV < U_m ≤ 245 kV for highest voltage for installation U_m not standardized by the IEC based on current practice in some countries

Voltage range	Highest voltage for installation	Rated short-duration power-frequency withstand voltage	Rated lightning impulse withstand voltage [a]	Minimum phase-to-earth and phase-to-phase clearance N	
	U_m RMS	U_d RMS	U_p 1,2 µs/50 µs (peak value)	Indoor installations	Outdoor installations
	kV	kV	kV	mm	mm
I	2,75	15	30	60	120
			45	70	120
			60	90	120
	4,76	19	60	90	120
	5,5	19	45	70	120
			60	90	120
			75	120	120
	8,25	27	60	90	120
			75	120	150
			95	160	160
	8,25	26	75	120	150
		35	95	160	160
	15	35	95	160	160
		50	110	180	180
	15,5	35	75	120	150
			85	150	160
			110	180	180
	17,5	38	110	180	
			125	220	
	24	50	150	280	
	25	50	95	190	290
			125	210	
			150		
	25,8	50	125	220	
		70	150	280	
	27	50	95	160	
			125	220	
			150	280	

[a] The rated lightning impulse withstand voltage is applicable to phase-to-phase and phase-to-earth.

Table A.2 – Values of rated insulation levels and minimum clearances in air for 1 kV < U_m ≤ 245 kV for highest voltage for installation U_m not standardized by the IEC based on current practice in some countries

Voltage range	Highest voltage for installation	Rated short-duration power-frequency withstand voltage	Rated lightning impulse withstand voltage [a]	Minimum phase-to-earth and phase-to-phase clearance N	
	U_m	U_d	U_p	Indoor installations	Outdoor installations
	RMS	RMS	1,2 µs/50 µs (peak value)		
	kV	kV	kV	mm	mm
I	30	70	160	290	
	36	70	200	380	
	38	70	125	220	
			150	280	
			200	360	
	38	70	150	280	
		95	200	360	
	38,5	75	155	270	400
			180	320	
			195		
	40,5	80	190	350	
	41,5	80	170	320	
			200	360	
	48,3	105	150	280	
			200	360	
			250	480	
	48,3	120	250	480	
	72,5	160	350	690	
	82,5	150	380	750	
	100	150	380	750	
		185	450	900	
	204	275	650	1 300	
		325	750	1 500	

[a] The rated lightning impulse withstand voltage is applicable to phase-to-phase and phase-to-earth.

Licensed copy: Sukanya Arayangkoon, The Electricity Generating Authority of, Version correct as of 22/03/2022

Table A.3 – Values of rated insulation levels and minimum clearances in air for U_m > 245 kV for highest voltages for installation U_m not standardized by the IEC based on current practice in some countries

Voltage range	Highest voltage for installation	Rated short-duration power-frequency withstand voltage	Rated lightning impulse withstand voltage[a]	Rated switching impulse withstand voltage	Minimum phase-to-earth clearance		Rated switching impulse withstand voltage	Minimum phase-to-phase clearance	
	U_m RMS	U_d RMS	U_p 1,2 µs/ 50 µs (peak value)	U_p Phase-to-earth 250 µs/ 2 500 µs (peak value)	Conductor – structure	Rod – structure N	U_p Phase-to-phase 250 µs/ 2 500 µs (peak value)	Conductor – conductor parallel	Rod – conductor
	kV	kV	kV	kV	mm		kV	mm	
II	362	520	1 300	950	2 400	2 900	1 425	3 100	3 600
	550	680	1 800	1 175		4 000			6 500
	550	710	1 800	1 175	3 300	4 100	2 210	6 100	7 400
	550	775	1 800	1 175	3 350	3 650		4 600	5 200
	550	635	1 300 1 425 1 550 1 800			5 800			5 800

[a] The rated lightning impulse withstand voltage is applicable phase-to-phase and phase-to-earth.

Licensed copy: Sukanya Arayangkoon, The Electricity Generating Authority of, Version correct as of 22/03/2022

Annex B
(normative)

Method of calculating permissible touch voltages

The equation to calculate the permissible touch voltage is as follows.

Formula:

$$U_{Tp} = I_B(t_f) \times \frac{1}{HF} \times Z_T(U_T) \times BF$$

where

U_T	is touch voltage	
U_{Tp}	is permissible touch voltage	
t_f	is fault duration	
$I_B(t_f)$	is body current limit	c_2 in Figure 20 and Table 11 of IEC 60479-1:2018, where probability of ventricular fibrillation is less than 5 %. I_B depends on fault duration
HF	is heart current factor	Table 12 of IEC 60479-1:2018, i.e. 1,0 for left hand to feet, 0,8 for right hand to feet, 0,4 for hand to hand
$Z_T(U_T)$	is body impedance	Table 1 and Figure 3 of IEC 60479-1:2018, Z_T not exceeded by 50 % of the population, Z_T depends on touch voltage. Therefore, first calculation has to start with assumed level
BF	is body factor	Figure 3 of IEC 60479-1:2018, i.e. 0,75 for hand to both feet, 0,5 for both hands to feet

NOTE 1 Different touch voltage conditions, e.g. left hand to feet, hand to hand, lead to different tolerable touch voltages. Figure 12 of this document is based on a weighted average taken from four different touch voltage configurations. Touch voltage left hand to feet (weighted 1,0), touch voltage right hand to feet (weighted 1,0), touch voltage both hands to feet (weighted 1,0) and touch voltage hand to hand (weighted 0,7).

NOTE 2 Different parameter values are applicable for some countries (as indicated in Annex G).

For specific consideration of additional resistances, the formula to determine prospective permissible touch voltage becomes:

$$U_{vTp} = I_B\left(t_f\right) \times \frac{1}{HF} \times \left(Z_T\left(U_T\right) \times BF + R_H + R_F\right)$$

where

U_{vTp} is prospective permissible touch voltage

R_H is additional hand resistance

R_F is additional foot resistance

Licensed copy: Sukanya Arayangkoon, The Electricity Generating Authority of, Version correct as of 22/03/2022

Annex C
(normative)

Permissible touch voltage according to IEEE 80

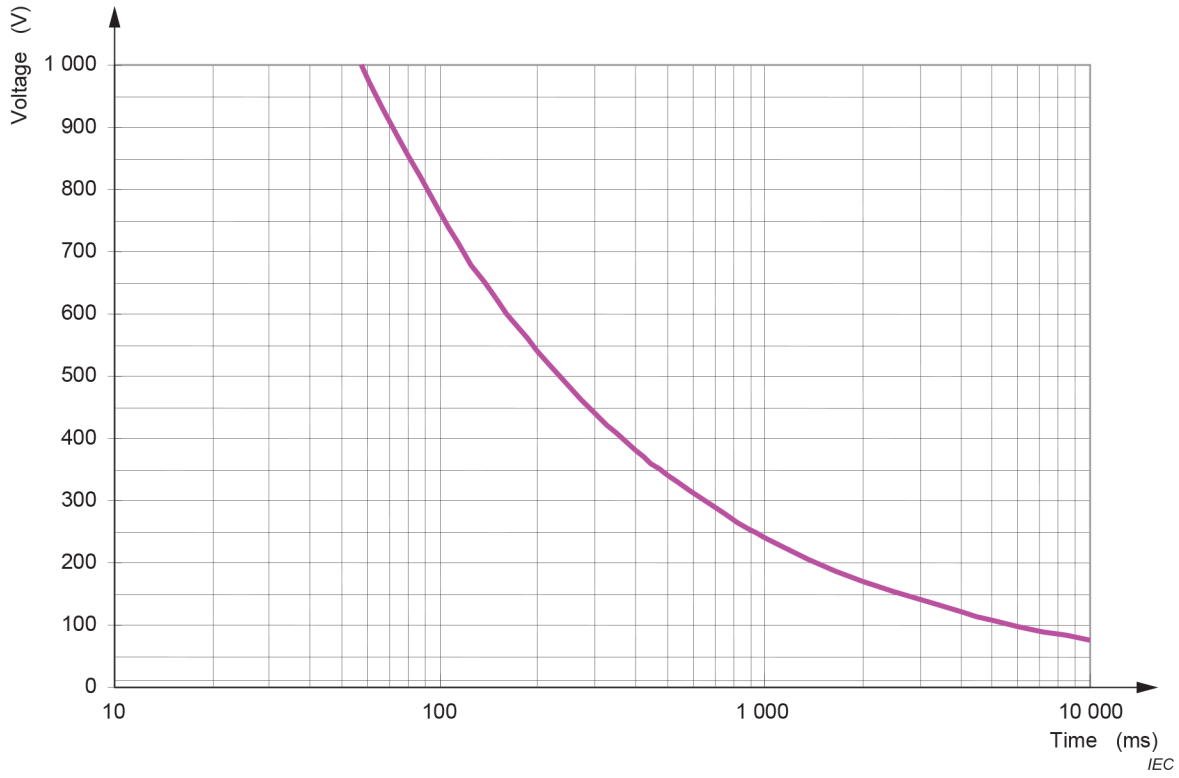

NOTE 1 The touch voltage curve is based on a specific electric resistivity of soil of 100 Ωm and a surface layer of 0,1 m with an electric resistivity of soil of 1 000 Ωm.

NOTE 2 Figure C.1 assumes a person weighing 50 kg and a gravel surface.

Figure C.1 – Permissible touch voltage U_{Tp} according to IEEE 80

Licensed copy: Sukanya Arayangkoon, The Electricity Generating Authority of, Version correct as of 22/03/2022

Annex D
(normative)

Earthing system design flow chart

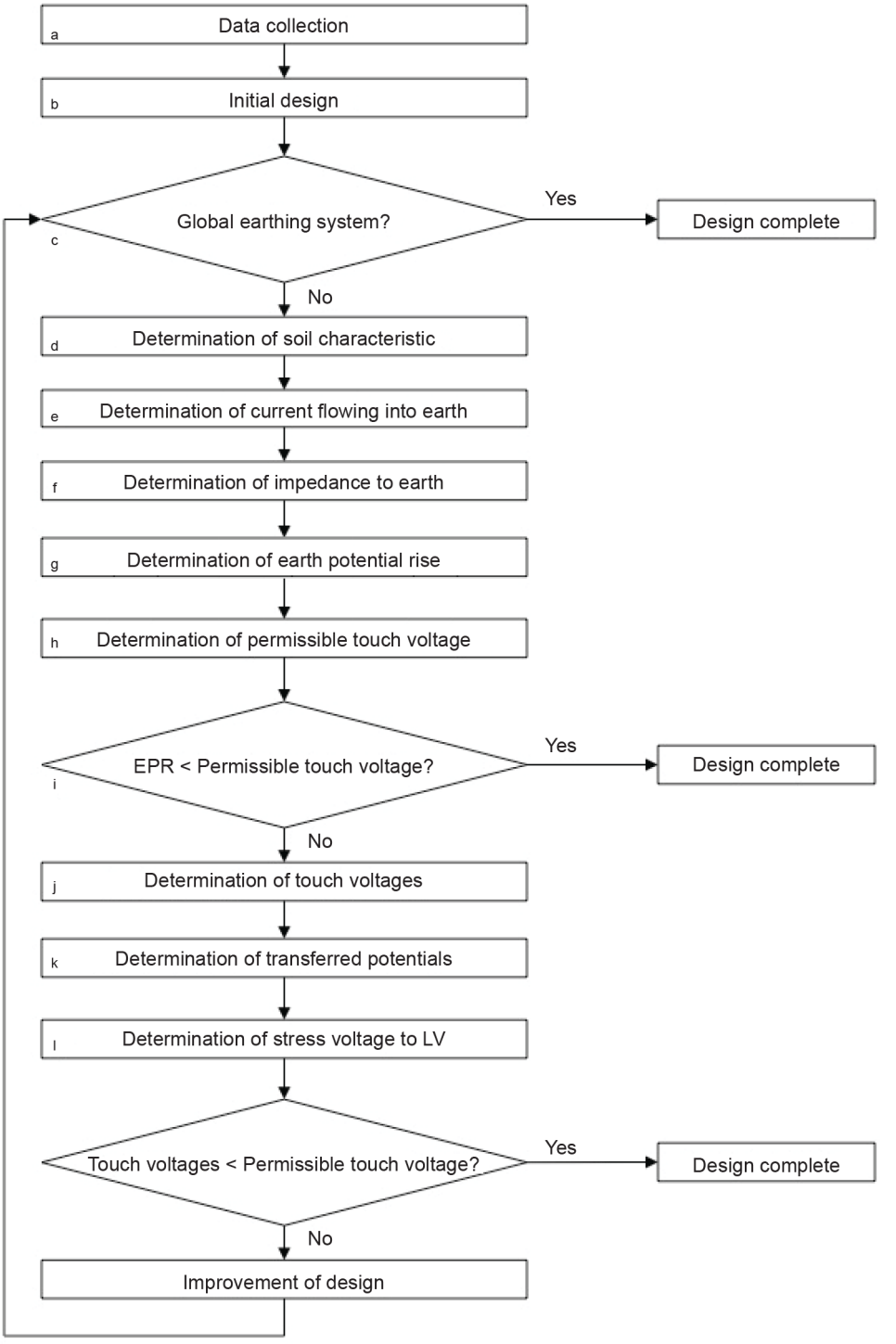

Licensed copy: Sukanya Arayangkoon, The Electricity Generating Authority of, Version correct as of 22/03/2022

Licensed copy: Sukanya Arayangkoon, The Electricity Generating Authority of, Version correct as of 22/03/2022

Annex E
(informative)

Protection measures against direct lightning strokes

E.1 General

Model tests, measurements, observation and experience over many years have shown that direct lightning strokes can be avoided with a high degree of certainty by using the arrangements of lightning shield wires or rods. Protection zones can be defined by using the rolling sphere method or obtained based on local operating experience shown in Figure E.1 through Figure E.4.

In general, the lightning protection zone can be determined through the striking distance R in metres applying the rolling sphere method. A number of formulas have been proposed for determining the striking distance. The most common are:

$R = 10 \times I^{0,65}$ [(IEC 62305-1:2010, Formula A.1, Annex A)]

$R = 8 \times k \times I^{0,65}$ [(IEEE 998, Formula 2-1D)]

where I is the lightning stroke return current in kA and k is a coefficient to account for different striking distances to a rod or a shield wire (k = 1 for shield wires and k = 1,2 for rod).

$$I = \frac{2,2 \times \mathrm{LIWV}}{Z_c}$$

where Z_c (Ω) is the conductor surge impedance and LIWV (kV) is the rated lightning impulse withstand voltage.

For substations with arresters, I can be obtained from the arrester discharge current.

Operational experience for electrical power installations up to 420 kV have shown that proper lightning protection can be achieved using the geometric method shown in Figure E.1 through Figure E.4 with heights H up to 25 m. For heights exceeding 25 m the protection zone is reduced.

This method has proven to achieve a sufficient protection level but without the need of detailed insulation coordination studies.

E.2 Shield wires

A single shield wire provides a tent-shaped protection zone, the limits of which are formed by arcs with a radius of $R = 2H$ beginning at the shield wire peak (see Figure E.1) and following the length of the wire.

Two shield wires at a distance of less than or equal to $2H$ apart provide an extension of the protection zone which is limited by the two conductors, an arc of radius R and centre M_R at a height $2H$ (see Figure E.2).

This zone is continuous all along the span of conductors.

E.3 Lightning rods

Upward streamer discharges develop earlier from lightning rods than from shield wires.

The protection zone of a lightning rod is generally larger than that of a shield wire at the same height.

A single lightning rod provides a cone-shaped protection zone with limits of an arc of radius 3 H passing through the tip of the lightning rod (refer to Figure E.3).

Two lightning rods at a spacing of less than or equal to 3 H provide an extension of the protection zone which is limited by an arc of radius R with the centre M_R at a height of 3 H passing through the tips of the lightning rods (see Figure E.4).

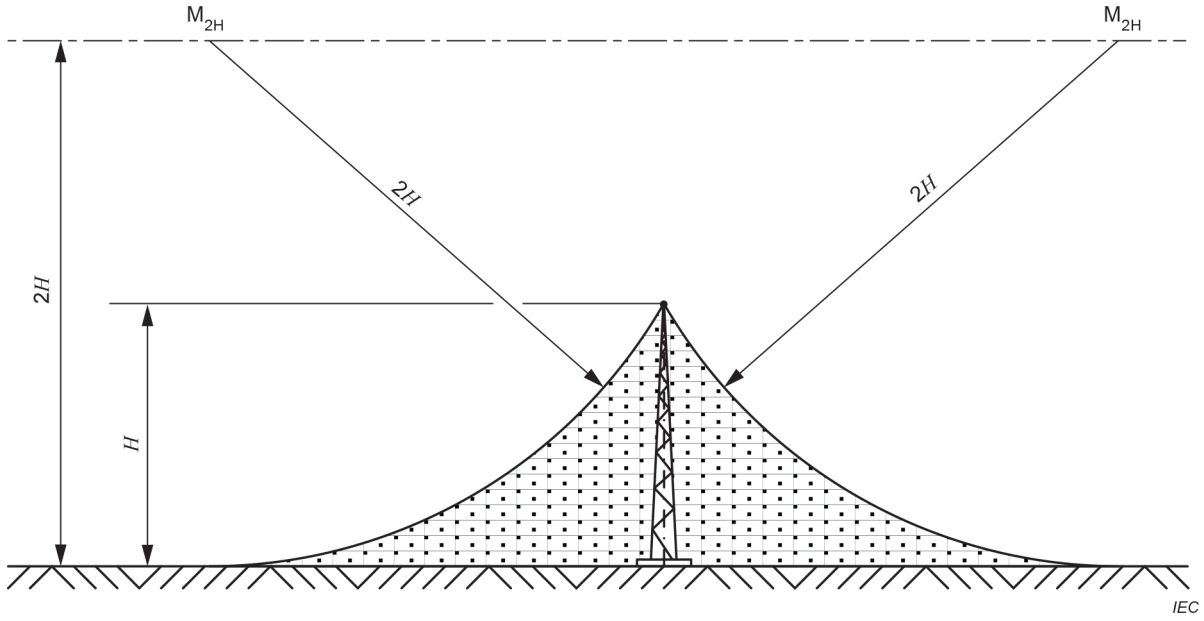

Figure E.1 – Single shield wire

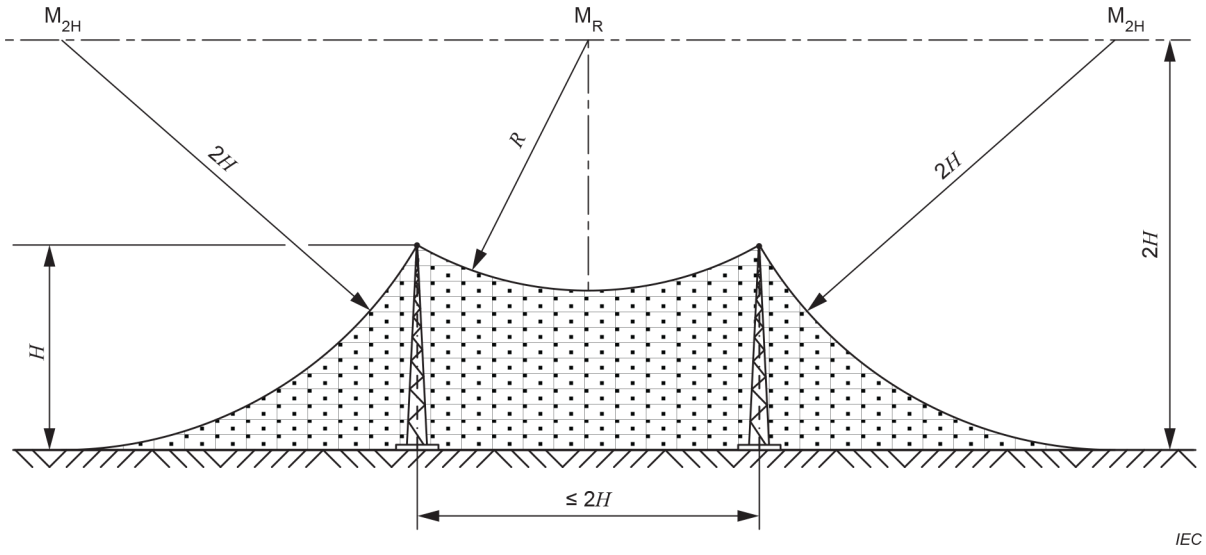

Figure E.2 – Two shield wires

Licensed copy: Sukanya Arayangkoon, The Electricity Generating Authority of, Version correct as of 22/03/2022

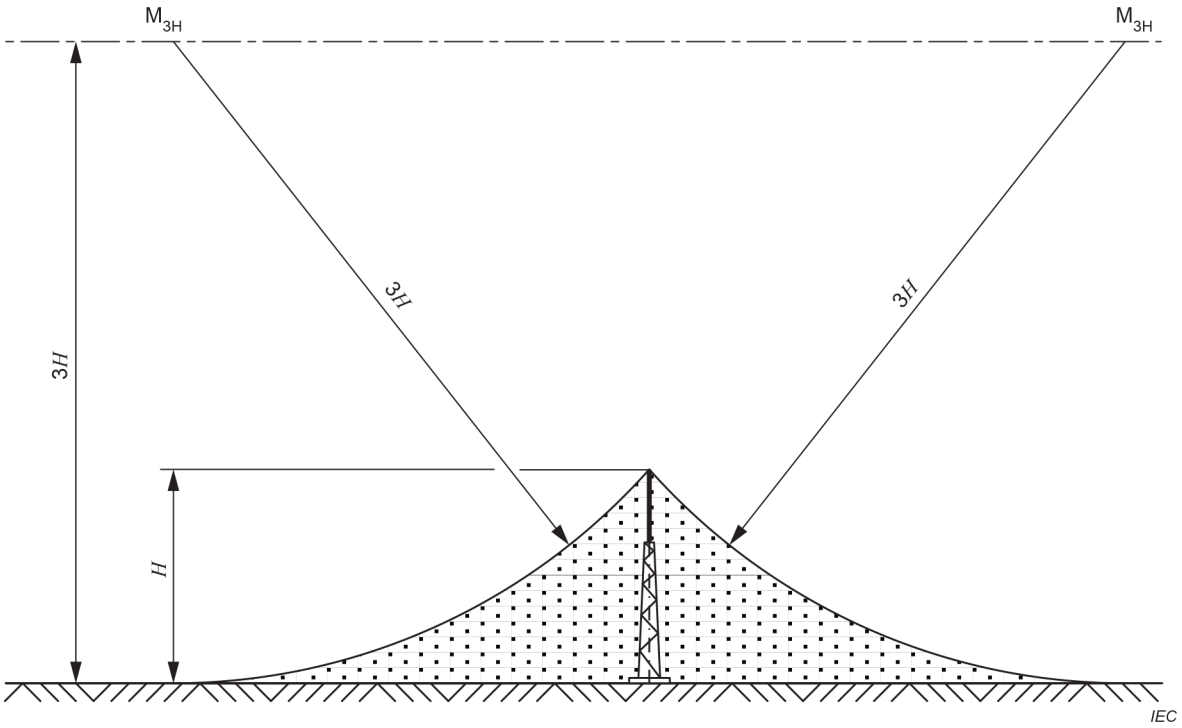

Figure E.3 – Single lightning rod

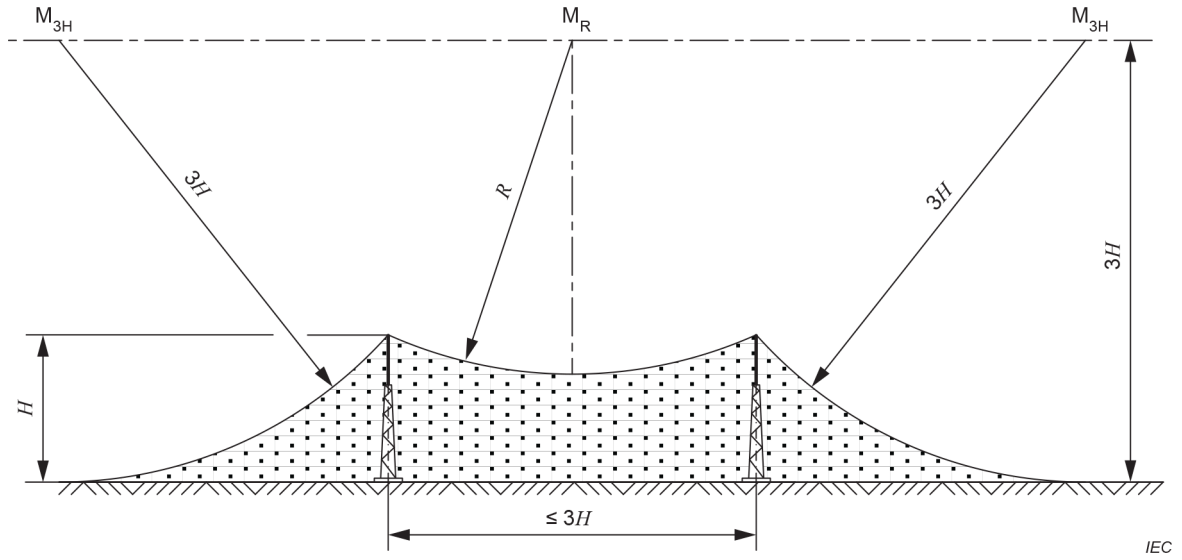

Figure E.4 – Two lightning rods

Licensed copy: Sukanya Arayangkoon, The Electricity Generating Authority of, Version correct as of 22/03/2022

Licensed copy: Sukanya Arayangkoon, The Electricity Generating Authority of, Version correct as of 22/03/2022

Annex F
(informative)

Considerations of design for safe working

The design of electrical power installations should comply with any provincial, national or regional regulations, standards and codes of practices pertaining to safe working in electrical power installations.

If no such regulations or standards are available, this informative annex outlines basic considerations relating to the key aspects and application of safe working distances in design. In particular, it is essential to highlight the importance of interaction and coordination between suppliers and users to ensure maintainability in addition to constructability and operability of electrical power installations.

Work activities may be undertaken in an electrical power installation under a variety of site or network conditions. Due to common operation practices, these work activities may be carried out according to the following procedures:

– dead working (work on de-energized parts of an installation);
– working in the vicinity of live parts (see IEV 651-21-02) (work near energized parts of an installation); and
– live working (see IEV 651-21-01).

Each of these three procedures involves adequate safety measures that mitigate the risks of electric shocks, short-circuit and arc faults.

Working distances may be determined based upon minimal clearance of danger zone (N), taking into consideration overvoltage conditions and ergonomic factors (e.g. considerations of inadvertent movements (full or expected reach) of persons, tools, equipment, vehicles and conductors).

NOTE 1 The ergonomic factors, especially the reach distances, can be derived from EN 547 or ISO 7149 and ISO 26800, in the absence of workforce or national information.

An illustration of working distances is given in Figure F.1. These are described as follows:

– D_V: Distance (D_V) defining the outer limit of the vicinity zone, which is the limited space outside the minimal clearance of danger zone (N).
– D_W: Working distance (D_W) to be observed between exposed live parts and any person working in a closed electrical operating area including any conductive tool directly handled.

Work in the vicinity zone is considered to be all work where a person is either inside the zone or reaches into the zone with parts of the body or tools, equipment and devices being handled but does not reach into the danger zone.

Design should consider the working distance D_W and vicinity distance D_V where works are intended to be carried out when some or all of the equipment are intended to be energized based on user requirements. It shall be ensured that the minimum separation between the de-energized part being worked on and the energized part does not result in a person working on the de-energized part entering the vicinity zone of any live part with any part of the body, tools or equipment. Other than in defined circumstances, D_W should be greater than or equal to D_V.

NOTE 2 Further information regarding safe work methods can be found in CIGRE Technical Brochure 805, Guidelines for safe work methods in substations.

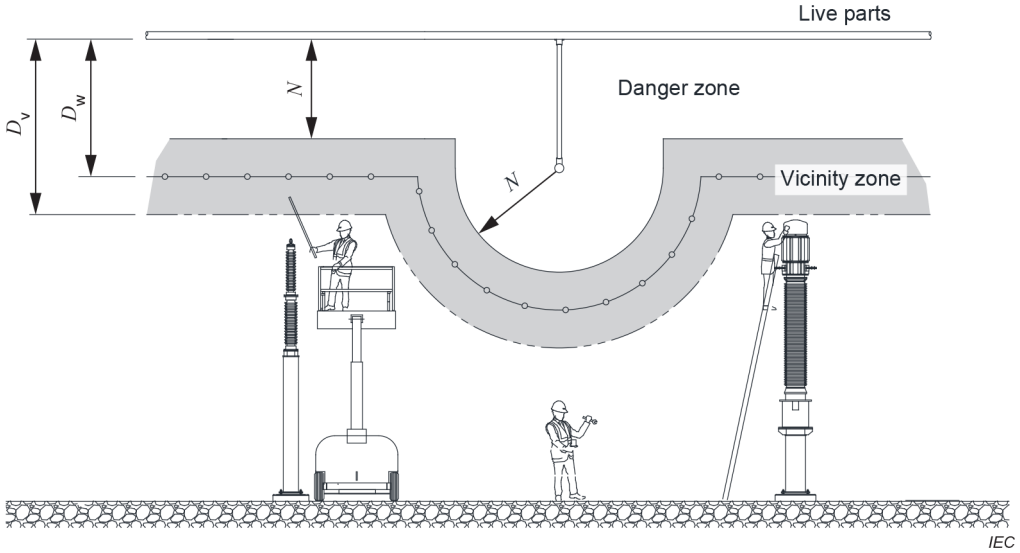

Key

N Minimum clearance of danger zone

D_v Vicinity distance according to provincial, national or regional standards and regulations

D_w Working distance according to provincial, national or regional standards and regulations

Figure F.1 – Working clearances within closed electrical operating areas

Designated work areas for routine maintenance should be considered during the design stage such that there are no energized parts within the work area and that danger zones are out of reach from the work areas. Design considerations should be given to safe access to these work areas.

Licensed copy: Sukanya Arayangkoon, The Electricity Generating Authority of, Version correct as of 22/03/2022

Annex G
(informative)

List of notes concerning particular conditions in certain countries

Country	Clause	Country note
AU	4.1.1	Risk Management Asset owners, designers and others carry common law and legislative obligations to manage risks to health and safety of personnel. The following hierarchy of risk controls provide guidance on meeting these obligations: – Elimination of the hazard. – Minimization of the risk by the following means: a) Substitution (to get a lower hazard). b) Isolation (from persons). c) Engineering controls. – Administrative controls. – Personal protective equipment (PPE). Elimination of the hazard is rarely an option given the utility/amenity involved. Minimizing the risk is non-trivial with fundamentally hazardous substances such as electricity. Duty of care is demonstrated when all reasonably practicable precautions have been taken. What is reasonably practicable includes a measure of the significance of the risk versus the effort required to reduce it. The risk that is assessed in this process includes the risk imposed on any individual (commonly determined for the maximally exposed, reasonably behaved individual) and for the risk imposed on society (commonly determined for multiple fatality risk for a single event). For further guidance on risk management, see ISO 31000. Acceptable risk targets for hazards in HV installations, even those within levels recognized by the international safety industry as being 'safe' may not be sufficient to meet a duty of care obligation. It is, however, reasonable that all known and commonly applied precautions have been assessed, and applied so far as is reasonably practicable (SFAIRP) or as low as reasonably practicable (ALARP) where the cost/risk reduction is not grossly disproportionate. A risk target below the assessed mean risk for all other hazards across all asset classes of the enterprise could also be used to help decide when seeking further precautions for a particular hazard will no longer be required. High voltage installations require a detailed quantitative risk assessment, based on industry or enterprise data including previous assessments. Realistic estimates of the associated cost increments are required to ensure the decision to not use a risk treatment, where the cost is disproportionate to the risk reduction, is soundly based.
AT	4.2.4	Values of rated duration of the short-circuit less than 1 s does not apply for electrical power installations design, construction and erection.
FI	4.4.2.2 a):	Even class –50 °C could be needed.
IE	4.4.2.2 g)	North Atlantic Maritime climatic conditions as per I.S. EN 50341 apply.
AU	5.4.1	The smaller clearances available in Table 2 and Table 3 are not applicable.

Licensed copy: Sukanya Arayangkoon, The Electricity Generating Authority of, Version correct as of 22/03/2022

Licensed copy: Sukanya Arayangkoon, The Electricity Generating Authority of, Version correct as of 22/03/2022

Country	Clause	Country note
BE	5.4.1	Add: The minimal clearance distances between bare live parts, between these parts and the exposed conductive part, or between bare live parts of the same phase when they are separated in the opening position is at least equal to: d = 50 + 6.75 (U_N – 1) where: d is the above-mentioned clearance in mm; U_N is the nominal voltage between phases of the apparatus expressed in kV and rounded up to the next unit.
IE	Table 2	Where the Grid & Distribution codes apply then – For U_m 123 kV U_d = 230 kV – For U_m 245 kV U_d = 460 kV
IE	Table 2	Where the Grid codes apply then the following applies: – For U_m 123 kV, min N =1 100 mm – For U_m 245 kV, min N (Ph-Ph) 2 700 mm and min N (Ph-Earth) 2 400 mm
IE	Table 3	Specific Grid Code requirements at 400 kV apply. Lightning Impulse (1,2/50 µs) is 1 550 kV, switching impulse (0,25/2,5 ms) is 1 175 kV. A value of 4750 mm phase–phase and 4 100 mm phase–earth applies.
IE	6.2.1	The Distribution Code & Grid Code mandate specific requirements for switch gear locking and interlocking.
IE	6.2.4.1	The Grid Code mandate the instrument transformer should be of composite (silicone rubber) insulator material. The composite insulator should not fragment and project parts on failure.
IE	6.2.4.2	Add the following: In IE The Grid and Distribution Codes mandate the following: require the short circuit withstand rating of current transformers to be consistent with that of the associated equipment and the system design fault levels.
IE	6.2.5	At transmission level, designs using porcelain are prohibited by the Transmission System Operator.
SE	7.1	A new extension of an existing installation shall comply with, at the time for the erection, valid standard
AU	7.1.1	Insert before last paragraph: Consideration shall be given to the spatial separation between live parts and work sections determined in accordance with national /local relations in order to restrict access to danger zone, taking into account the need for operational and maintenance access.
AU	7.2.1	Replace first sentence of second paragraph with: The design of the electrical power installation shall give consideration to the spatial separation between live parts and the limits of work sections determined in accordance with national / local regulations and practices be such as to restrict access to danger zones, taking into account the need for operational and maintenance access. In designing layouts, the limits of work sections may be from ground or floor level from a platform from which a person works. For persons free to be in proximity of live parts it is necessary to provide enough spatial separation between the person's standing point and danger zone measured along a taut string stretched the shortest way between those parts. See Annex F.
AU	7.2.2	Consideration of taut string clearance distances,

Licensed copy: Sukanya Arayangkoon, The Electricity Generating Authority of, Version correct as of 22/03/2022

Country	Clause	Country note
BE	7.2.2	The minimal protective barrier and protective obstacle clearances shall be at least equal to the prescriptions of clause 4.2.2 of Book 2 of the GREI.
BE	7.2.2	The barriers for installations shall comply with the prescriptions of Book 2 of the GREI. The minimum height for outdoor installations shall also have a minimum height of 2,0 m.
AU	7.2.2	In the second dash: The degree of protection is IP1XB or IP2X (see AS 60529) and the minimum protection barrier clearance is B_2 =N + 300 mm (to reflect a tool being inserted).
FI	7.2.2	Barriers for outdoor installations shall have a minimum height of 2,0 m. They shall fulfil the same requirements as the external fence. The minimum height of live parts behind a barrier shall be N + 300 mm with a minimum of 800 mm.
BE	7.2.3	The minimal protective barrier and protective obstacle clearances shall be at least equal to the prescriptions of clause 4.2.2 of Book 2 of the GREI.
FI	7.2.3	The use of protective method obstacles is not allowed in electrical installations outside of buildings.
SE	7.2.3	Rails, chains and ropes are not allowed as protective obstacle
IE	7.2.4	C = 4 500 mm E = 4 500 mm
AU	7.2.5	Regarding the minimum height over access areas, replace 2 250 with 2 440 for both dash points.
FI	7.2.5	The height H for outdoor installations shall be at least H = N + 2 600 mm, with a minimum of 2 800 mm.
IE	7.2.5	Replace "2 250" with "2 300" in subclause
SE	7.2.5	The height H for outdoor installations shall be at least H = N + 2 500 mm, with a minimum of 3 000 mm.
AU	Figure 4	Replace 2 250 with 2 440 for both dimensions in figure.
AU	7.2.7	The external fence/wall shall be at least 2 500 mm high. 7.2.7 50 mm × 50 mm mesh is the maximum mesh size accepted.
FI	7.2.7	The height of the external fence shall be at least 2 000 mm. The local conditions of snow shall be taken into account.
AU	7.3	Replace first sentence of second paragraph with: The design of the electrical power installation shall give consideration to the spatial separation between live parts and the limits of work sections determined in accordance with national/local regulations and practices be such as to prevent access to danger zones taking into account the need of access for operational and maintenance purposes. Therefore, safety distances or permanent protective facilities within the installation shall be provided. In designing layouts, the limits or work sections may be from ground or floor level from a platform from which a person works. For persons free to be in proximity of live parts it is necessary to provide enough spatial separation between the person's standing point and danger zone measured along a taut string stretched the shortest way between those parts. See Annex F.
FI	7.3	The use of indoor installations of open design is not allowed
SE	7.3	Rails, chains and ropes are not allowed as protective obstacle
SE	7.4.1	Outside closed electrical operation areas electrical equipment and cables shall either be constructed with an earthed intermediate shield or be protected against unintentional contact by placing out of reach. With an earthed intermediate shield, a metal enclosure for equipment or a screen for cables are understood.
SE	7.5.4	Gangways longer than 10 m shall be accessible from both ends. Indoor closed restricted access areas with length exceeding 20 m shall be accessible by doors from both ends (See also IEC 60364-7-729).

Licensed copy: Sukanya Arayangkoon, The Electricity Generating Authority of, Version correct as of 22/03/2022

Country	Clause	Country note
AU	7.7	The minimum height H' of live parts above surfaces accessible to the general public shall be in accordance with national standards and regulations.
FI	7.7	The minimum height H' of live parts above surfaces accessible to the general public shall be H' = 5 500 mm for rated voltages U_m up to 24 kV and H' = N + 5 300 mm for rated voltages U_m above 24 kV.
SE	8.2.1	Exposed-conductive-parts shall be earthed. Also extraneous-conductive-parts which by faults, induction, or influence could become live and be a hazard to persons or damage to property shall be earthed.
BE	8.2.2.2	Rails, chains and ropes are not allowed as protective obstacle
SE	8.2.2.2	Rails, chains and ropes are not allowed as protective obstacle
SE	8.2.3.1	Outside closed electrical operation areas, equipment and cables shall either be constructed with an earthed intermediate shield or be protected against unintentional contact by placing out of reach. With an earthed intermediate shield, a metal enclosure for equipment or a screen for cables are understood.
FI	8.2.3.2	The use of protective method obstacles is not allowed in electrical installations of buildings. The use of protective method placing out of reach is restricted only to situations where the use of insulation or enclosures or barriers is not practicable.
SE	8.2.3.2	Rails, chains and ropes are not allowed as protective obstacles.
FI	8.2.3.3	In installations with U_m ≤ 52 kV, where doors or covers have to be opened in order to carry out normal operation or maintenance, a rigid non-conductive rail shall be used as an additional protective measure.
AU	8.7.1.	For each installation a fire risk assessment (FRA) should be undertaken as described in Section 4.1. Fire rating of barriers must be a minimum fire rating of 120 minutes.
AU	8.7.2.2	The dimensions G_1 and G_2 are to be measured from the inside edge wall of any bund wall rather than the measured point shown in Figure 7a) and 7b) from the transformer where the bund wall is wider than the transformer. For this purpose, adequate clearances from the fire source, which shall include a fire in the bunded area shall be provided.
AU	8.7.2.2	Indent a), replace "For example EI 60" with "Shall be REI 120". indent b), delete second sentence and add "shall be REI 120" at the end to the first sentence.
AU	8.7.2.2	Insert new paragraph after Indent b) as follows: – An alternative performance-based analysis can be carried out by calculation of radiated head flux which Is dependent on the oil pool area and depth of bund for fire duration to determine separation distance to accurately model the fire conditions and the impacts to the adjacent equipment and buildings. Refer to CIGRE Technical Brochure 537 and IEEE standard 979. Further guidance can be obtained from the International Fire Engineering Guidelines.
AU	Figure 6	Replace figure text "Minimum fire resistance 00 min for the separating wall (EI 60)" with "Minimum fire resistance 120 min for the separating wall (RE120)".
AU	Figure 7	Drawing a) Figure shall be changed to indicate a bund and the dimensions G_1 and G_2 are to be measured from the inside edge of the bund wall. Drawing b) Figure shall be changed to indicate a bund and the dimensions G_1 and G_2 are to be measured from the inside edge of the bund wall.
AU	Figure 7	Key, Sector a: Replace 90 min (REI 90) with 120 min (REI 120))

Country	Clause	Country note
AU	Table 4	After indent d) insert: An alternative performance-based analysis can be carried out by calculation of radiated head flux which Is dependent on the oil pool area and depth of bund for fire duration to determine separation distance to accurately model the fire conditions and the impacts to the adjacent equipment and buildings. Refer to CIGRE Technical Brochure 537 and IEEE Standard 979. Further guidance can be obtained from the International Fire Engineering Guidelines.
AU	Table 5	After indent c) insert: An alternative performance-based analysis can be carried out by calculation of radiated head flux which Is dependent on the oil pool area and depth of bund for fire duration to determine separation distance to accurately model the fire conditions and the impacts to the adjacent equipment and buildings. Refer to CIGRE Technical Brochure 537 and IEEE Standard 979. Further guidance can be obtained from the International Fire Engineering Guidelines.
AU	8.8.1.3	The internal dimensions of the bund shall extend a minimum of 600 mm or 50 % of the height of the highest liquid level, whichever is the greater.
AU	10	The requirements regarding earthing refer to AS 2067, Substations and high voltage installations exceeding 1 kV a.c.
SE	10	For requirements according to clause 10, the standard SS-EN 50522 is applicable
AT	10.2.1	The curve in Figure 12, which gives the permissible touch voltage, shall be used. The IEEE 80 curve shown in Annex C shall not be used as an alternative to the curve in Figure 12.
EI	10.2.2	The Grid and Distribution Code identify requirements. Where the customer plant is adjacent to a TSO/DSO substation, the two earthing systems should be interconnected, however each station earth grid should have the capability to perform independently. The point of interconnection should be provided with isolation links
AT	10.3.1	In Austria, the design is also complete if U_{E} is less than 2 U_{Tp} and the requirements of Table 6 are met. Furthermore, the design is also complete if U_{E} is less than 4 U_{Tp} with specified measures M applied and the requirements of Table 6 are met. Therefore the flowchart of the design process in Annex D is not applicable.
BE	Figure 12	The values of U_{Tp} for times longer than 10 s is equal to 75 V.
DE	Annex F	Safe working procedures are regulated in the national standard DIN VDE 0105-100. The term "danger zone *N*" as used in figure F.1 is defined in Germany by "live working zone D_{L}". The values for the distances D_{L} are determined in Table 101, values for the vicinity zone and the according distances D_{V} in Tables 102 and 103 of DIN VDE 0105-100.

Licensed copy: Sukanya Arayangkoon, The Electricity Generating Authority of, Version correct as of 22/03/2022

Country	Clause	Country note
AT	Annex E	According to the Electrical Engineering Act 1992 (BGBl. Nr. 106/1993, in the relevant version) and the associated electrical engineering regulation 2020 (BGBl. II Nr. 308/2020), the following provisions on lightning protection in high-voltage systems shall apply as stated in OVE-Richtlinie R 1000-3: High-voltage switchgear must be equipped with a lightning protection system (external and internal lightning protection). A distinction can be made between buildings and outdoor switchgear. State-of-the-art documentation must be available for planning and testing the lightning protection system. In this documentation, the boundaries of the danger zone to live parts (high voltage) must be drawn. When installing lightning protection systems in high-voltage switchgear, the minimum lightning protection class II according to OVE-Richtlinie R 1000-2 to be used. Buildings: Buildings are structural systems and must be equipped with a state-of-the-art lightning protection system. Outdoor switchgear: Outdoor switchgear must be equipped with state-of-the-art lightning protection systems. The air-termination systems are to be positioned in such a way that the lightning channel penetration of the danger zone is prevented. In outdoor switchgear, deviations from the requirements of minimum lightning protection class II with regard to the rolling sphere radius = 30 · (1 + 0.15) m are permitted if this can be justified from the location of the high-voltage system parts. Down-conductor systems are to be designed, erected and connected to the earthing system in such a way that safe conduction of the lightning currents into the earth is ensured. The use of lightning protection rods is recommended in outdoor switchgear. Conductive structural parts with an earth effect (e.g. framework, portals) can also be used as natural air-termination systems. The separation distance to the danger zone of high-voltage parts shall be observed. When locating the air-termination systems of the lightning protection system, maintenance and operation shall also be taken into account.

NOTE The nature of the list of notes is permanent or less permanent according to IEC Directives.

Licensed copy: Sukanya Arayangkoon, The Electricity Generating Authority of, Version correct as of 22/03/2022

Licensed copy: Sukanya Arayangkoon, The Electricity Generating Authority of, Version correct as of 22/03/2022

Bibliography

CIGRE Guide No. 234: August 2003, *SF_6 Recycling Guide (Revision 2003)*

CIGRE Guide No. 276: August 2005, *Guide for the preparation of customized 'Practical SF_6 Handling Instructions'*

CIGRE Report 23-03:1991, *Handling of SF_6 and its decomposition products in Gas Insulated Switchgear (GIS)*

CIGRE Report 23-07:1991, *Adaptation of substations to their environment both in urban and rural areas, including noise problems and oil pollution of subsoil*

CIGRE Technical Brochure No. 214: 2002, *The mechanical effects of short-circuit currents in open air substations. Part II. Companion brochure to No. 105*

CIGRE Technical Brochure No. 535: 2013, *EMC within Power Plants and Substations*

CIGRE Technical Brochure No. 537: 2013, *Guide for Transformer Fire Safety Practices*

CIGRE Technical Brochure 805: 2020, *Guidelines for safe work methods in substations*

CISPR 18-1, *Radio interference characteristics of overhead power lines and high-voltage equipment – Part 1: Description of phenomena*

CISPR 18-2, *Radio interference characteristics of overhead power lines and high-voltage equipment – Part 2: Methods of measurement and procedure of determining limits*

CISPR 18-3, *Radio interference characteristics of overhead power lines and high-voltage equipment – Part 3: Code of practice for minimizing the generation of radio noise*

EN 547 (all parts), *Safety of machinery – Human body measurements*

EN 13501-1, *Fire classification of construction products and building elements – Part 1: Classification using data from reaction to fire tests*

EN 13501-2, *Fire classification of construction products and building elements – Part 2: Classification using data from fire resistance tests, excluding ventilation services*

Factory Mutual Global Standard 3990, *Approval standard for Less or Nonflammable Liquid Insulated Transformers*

FM Global Data Sheets 5-4, *Property Loss Prevention*

IEC 60034-3, *Rotating electrical machines – Part 3: Specific requirements for synchronous generators driven by steam turbines or combustion gas turbines and for synchronous compensators*

IEC 60038, *IEC standard voltages*

IEC 60050-151, *International Electrotechnical Vocabulary – Part 151: Electrical and magnetic devices*

IEC 60050-195, *International Electrotechnical Vocabulary – Part 195: Earthing and protection against electric shock*

IEC 60050-411, *International Electrotechnical Vocabulary – Chapter 411: Rotating machines*

IEC 60050-441, *International Electrotechnical Vocabulary – Chapter 441: Switchgear, controlgear and fuses*

IEC 60050-601, *International Electrotechnical Vocabulary – Chapter 601: Generation, transmission and distribution of electricity – General*

IEC 60050-602, *International Electrotechnical Vocabulary – Part 602: Generation, transmission and distribution of electricity – Generation*

IEC 60050-604, *International Electrotechnical Vocabulary – Chapter 604: Generation, transmission and distribution of electricity – Operation*

IEC 60050-605, *International Electrotechnical Vocabulary – Chapter 605: Generation, transmission and distribution of electricity – Substations*

IEC 60050-651, *International Electrotechnical Vocabulary – Part 651: Live working*

IEC 60050-826, *International Electrotechnical Vocabulary – Part 826: Electrical installations*

IEC 60068 (all parts), *Environmental testing*

IEC 60076-13, *Power transformers – Part 13: Self-protected liquid-filled transformers*

IEC 60092 (all parts), *Electrical installations in ships*

IEC 60282-1, *High-voltage fuses – Part 1: Current-limiting fuses*

IEC 60282-2, *High-voltage fuses – Part 1: Expulsion fuses*

IEC 60364-4-41, *Low-voltage electrical installations – Part 4-41: Protection for safety – Protection against electric shock*

IEC 60364-7-729, *Low-voltage electrical installations – Part 7-729: Requirements for special installations or locations – Operating or maintenance gangways*

IEC 60376*, Specification of technical grade sulphur hexafluoride (SF_6) and complementary gases to be used in its mixtures for use in electrical equipment*

IEC 60480, *Specifications for the re-use of sulphur hexafluoride (SF_6) and its mixtures in electrical equipment*

IEC 60664-1, *Insulation co-ordination for equipment within low-voltage systems – Part 1: Principles, requirements and tests*

IEC 60721 (all parts), *Classification of environmental conditions*

IEC 60721-2-2, *Classification of environmental conditions – Part 2-2: Environmental conditions appearing in nature – Precipitation and wind*

IEC 60721-2-3, *Classification of environmental conditions – Part 2-3: Environmental conditions appearing in nature – Air pressure*

Licensed copy: Sukanya Arayangkoon, The Electricity Generating Authority of, Version correct as of 22/03/2022

IEC 60721-2-4, *Classification of environmental conditions – Part 2-4: Environmental conditions appearing in nature – Solar radiation and temperature*

IEC 60721-2-7, *Classification of environmental conditions – Part 2-7: Environmental conditions appearing in nature – Fauna and flora*

IEC 60721-3-1, *Classification of environmental conditions – Part 3-1: Classification of groups of environmental parameters and their severities – Storage*

IEC 60721-3-2, *Classification of environmental conditions – Part 3-2: Classification of groups of environmental parameters and their severities – Transportation and handling*

IEC 60826, *Overhead transmission lines – Design criteria*

IEC 60832 (all parts), *Live working – Insulating sticks and attachable devices*

IEC 60855-1, *Live working – Insulating foam-filled tubes and solid rods – Part 1: Tubes and rods of a circular cross-section*

IEC 60865-1, *Short-circuit currents – Calculation of effects – Part 1: Definitions and calculation methods*

IEC 60909 (all parts), *Short-circuit currents in three-phase AC systems*

IEC 60949, *Calculation of thermally permissible short-circuit currents, taking into account non-adiabatic heating effects*

IEC 61000 (all parts), *Electromagnetic compatibility (EMC)*

IEC 61039, *Classification of insulating liquids*

IEC 61082-1, *Preparation of documents used in electrotechnology – Part 1: Rules*

IEC 61243 (all parts), *Live working – Voltage detectors*

IEC 61355-1, *Classification and designation of documents for plants, systems and equipment – Part 1: Rules and classification tables*

IEC 61869 (all parts), *Instrument transformers*

IEC 61892 (all parts), *Mobile and fixed offshore units – Electrical installations*

IEC 62271-4, *High-voltage switchgear and controlgear – Part 4: Handling procedures for sulphur hexafluoride (SF_6) and its mixtures*

IEC 62271-100, *High voltage switchgear and controlgear – Part 100: High-voltage alternating current circuit-breakers*

IEC 62271-102, *High voltage switchgear and controlgear – Part 102: High-voltage alternating current disconnectors and earthing switches*

IEC 62271-103, *High voltage switchgear and controlgear – Part 103: Switches for rated voltages above 1 kV and less than 52 kV*

Licensed copy: Sukanya Arayangkoon, The Electricity Generating Authority of, Version correct as of 22/03/2022

Licensed copy: Sukanya Arayangkoon, The Electricity Generating Authority of, Version correct as of 22/03/2022

IEC 62271-104, *High voltage switchgear and controlgear – Part 104: Switches for rated voltages of 52 kV and above*

IEC 62271-105, *High voltage switchgear and controlgear – Part 105: Alternating current switch-fuse combinations*

IEC 62271-206, *High-voltage switchgear and controlgear – Part 206: Voltage presence indicating systems for rated voltages above 1 kV and up to and including 52 kV*

IEC 62271-208, *High voltage switchgear and controlgear – Part 208: Methods to quantify the steady state, power-frequency electromagnetic fields generated by HV switchgear assemblies and HV/LV prefabricated substations*

IEC TS 62271-304:2019, *High-voltage switchgear and controlgear – Part 304: Classification of indoor enclosed switchgear and controlgear for rated voltages above 1 kV up to and including 52 kV related to the use in special service conditions with respect to condensation and pollution*

IEC 62305 (all parts), *Protection against lightning*

IEC TR 62655*, Tutorial and application guide for high-voltage fuses*

IEC TR 63054 *Low-voltage switchgear and controlgear – Fire risk analysis and risk reduction measures*

IEC 81346 (all parts), *Industrial systems, installations and equipment and industrial products – Structuring principles and reference designations*

IEC Guide 51, *Safety aspects – Guidelines for their inclusion in standards*

IEEE 80, *Guide for safety in AC substation grounding*

IEEE 980, *Guide for containment and control of oil spills in substations*

IEEE Guide 998:1996, *IEEE Guide for Direct Lightning Stroke Shielding of Substations*

ISO 1996-1, *Acoustics – Description, measurement and assessment of environmental noise – Part 1: Basic quantities and assessment-procedures*

ISO 26800, *Ergonomics – General approach, principles and concepts*

ISO 31000, *Risk management – Guidelines*

ISO 7149, *Continuous handling equipment – Safety code – Special rules*

_____

NO COPYING WITHOUT BSI PERMISSION EXCEPT AS PERMITTED BY COPYRIGHT LAW

British Standards Institution (BSI)

BSI is the national body responsible for preparing British Standards and other standards-related publications, information and services.

BSI is incorporated by Royal Charter. British Standards and other standardization products are published by BSI Standards Limited.

Licensed copy: Sukanya Arayangkoon, The Electricity Generating Authority of, Version correct as of 22/03/2022

About us

We bring together business, industry, government, consumers, innovators and others to shape their combined experience and expertise into standards -based solutions.

The knowledge embodied in our standards has been carefully assembled in a dependable format and refined through our open consultation process. Organizations of all sizes and across all sectors choose standards to help them achieve their goals.

Information on standards

We can provide you with the knowledge that your organization needs to succeed. Find out more about British Standards by visiting our website at bsigroup.com/standards or contacting our Customer Services team or Knowledge Centre.

Buying standards

You can buy and download PDF versions of BSI publications, including British and adopted European and international standards, through our website at bsigroup.com/shop, where hard copies can also be purchased.

If you need international and foreign standards from other Standards Development Organizations, hard copies can be ordered from our Customer Services team.

Copyright in BSI publications

All the content in BSI publications, including British Standards, is the property of and copyrighted by BSI or some person or entity that owns copyright in the information used (such as the international standardization bodies) and has formally licensed such information to BSI for commercial publication and use.

Save for the provisions below, you may not transfer, share or disseminate any portion of the standard to any other person. You may not adapt, distribute, commercially exploit or publicly display the standard or any portion thereof in any manner whatsoever without BSI's prior written consent.

Storing and using standards

Standards purchased in soft copy format:

- A British Standard purchased in soft copy format is licensed to a sole named user for personal or internal company use only.
- The standard may be stored on more than one device provided that it is accessible by the sole named user only and that only one copy is accessed at any one time.
- A single paper copy may be printed for personal or internal company use only.

Standards purchased in hard copy format:

- A British Standard purchased in hard copy format is for personal or internal company use only.
- It may not be further reproduced – in any format – to create an additional copy. This includes scanning of the document.

If you need more than one copy of the document, or if you wish to share the document on an internal network, you can save money by choosing a subscription product (see 'Subscriptions').

Reproducing extracts

For permission to reproduce content from BSI publications contact the BSI Copyright and Licensing team.

Subscriptions

Our range of subscription services are designed to make using standards easier for you. For further information on our subscription products go to bsigroup.com/subscriptions.

With **British Standards Online (BSOL)** you'll have instant access to over 55,000 British and adopted European and international standards from your desktop. It's available 24/7 and is refreshed daily so you'll always be up to date.

You can keep in touch with standards developments and receive substantial discounts on the purchase price of standards, both in single copy and subscription format, by becoming a **BSI Subscribing Member.**

PLUS is an updating service exclusive to BSI Subscribing Members. You will automatically receive the latest hard copy of your standards when they're revised or replaced.

To find out more about becoming a BSI Subscribing Member and the benefits of membership, please visit bsigroup.com/shop.

With a **Multi-User Network Licence (MUNL)** you are able to host standards publications on your intranet. Licences can cover as few or as many users as you wish. With updates supplied as soon as they're available, you can be sure your documentation is current. For further information, email cservices@bsigroup.com.

Revisions

Our British Standards and other publications are updated by amendment or revision.

We continually improve the quality of our products and services to benefit your business. If you find an inaccuracy or ambiguity within a British Standard or other BSI publication please inform the Knowledge Centre.

Useful Contacts

Customer Services
Tel: +44 345 086 9001
Email: cservices@bsigroup.com

Subscriptions
Tel: +44 345 086 9001
Email: subscriptions@bsigroup.com

Knowledge Centre
Tel: +44 20 8996 7004
Email: knowledgecentre@bsigroup.com

Copyright & Licensing
Tel: +44 20 8996 7070
Email: copyright@bsigroup.com

BSI Group Headquarters

389 Chiswick High Road London W4 4AL UK