Designation: A 998/A 998M – 08

Standard Practice for Structural Design of Reinforcements for Fittings in Factory–Made Corrugated Steel Pipe for Sewers and Other Applications[1]

This standard is issued under the fixed designation A 998/A 998M; the number immediately following the designation indicates the year of original adoption or, in the case of revision, the year of last revision. A number in parentheses indicates the year of last reapproval. A superscript epsilon (ε) indicates an editorial change since the last revision or reapproval.

1. Scope

1.1 This practice covers the structural design of reinforcement for fittings in factory-made, round corrugated steel pipe, conforming to Specifications A 760/A 760M or A 762/A 762M, for use as storm and sanitary sewers and other buried applications. This practice is for fittings on pipe installed in a trench or embankment and subjected to earth loads and live loads. It must be recognized that a buried corrugated pipe is a composite structure made up of the steel ring and the soil envelope, and both elements play a vital part. Both main and branch pipe shall be designed in accordance with Practice A 796/A 796M and installed in accordance with Practice A 798/A 798M.

1.2 This practice covers the structural design of reinforcement for fittings such as those for branch pipes. Refer to Section 5 for design limitations.

1.3 *This standard does not purport to address all of the safety concerns, if any, associated with its use. It is the responsibility of the user of this standard to establish appropriate safety and health practices and determine the applicability of regulatory limitations prior to use.*

1.4 The values stated in either inch-pound units or SI units shall be regarded separately as standard. The values stated in each system are not exact equivalents; therefore, each system must be used independently of the other, without combining values in any way. SI units are shown in brackets in the text for clarity, but they are the applicable values when the design is to be performed using SI units.

2. Referenced Documents

2.1 *ASTM Standards:* [2]

A 36/A 36M Specification for Carbon Structural Steel

A 153/A 153M Specification for Zinc Coating (Hot-Dip) on Iron and Steel Hardware

A 307 Specification for Carbon Steel Bolts and Studs, 60 000 PSI Tensile Strength

A 760/A 760M Specification for Corrugated Steel Pipe, Metallic-Coated for Sewers and Drains

A 762/A 762M Specification for Corrugated Steel Pipe, Polymer Precoated for Sewers and Drains

A 796/A 796M Practice for Structural Design of Corrugated Steel Pipe, Pipe-Arches, and Arches for Storm and Sanitary Sewers and Other Buried Applications

A 798/A 798M Practice for Installing Factory-Made Corrugated Steel Pipe for Sewers and Other Applications

A 902 Terminology Relating to Metallic Coated Steel Products

A 929/A 929M Specification for Steel Sheet, Metallic-Coated by the Hot-Dip Process for Corrugated Steel Pipe

F 568M Specification for Carbon and Alloy Steel Externally Threaded Metric Fasteners (Metric)

2.2 *AASHTO Standard:*[3]

Standard Specifications for Highway Bridges

LRFD Bridge Design Specifications

2.3 *American Railway Engineering and Maintenance-of-Way Association:*

AREMA Manual[4]

2.4 *Society of Automotive Engineers:*

[1] This practice is under the jurisdiction of ASTM Committee A05 on Metallic-Coated Iron and Steel Products and is the direct responsibility of Subcommittee A05.17 on Corrugated Steel Pipe Specifications.

Current edition approved May 1, 2008. Published June 2008. Originally approved in 1998. Last previous edition approved in 1998 as A 998/A 998M - 98(2003).

[2] For referenced ASTM standards, visit the ASTM website, www.astm.org, or contact ASTM Customer Service at service@astm.org. For *Annual Book of ASTM Standards* volume information, refer to the standard's Document Summary page on the ASTM website.

[3] Available from American Association of State Highway and Transportation Officials (AASHTO), 444 N. Capitol St., NW, Suite 249, Washington, DC 20001.

[4] Available from American Railway Engineering and Maintenance-of-Way Association (AREMA), 8201 Corporate Drive, Suite 1125, Landover, MD 20785–2230.

Copyright © ASTM International, 100 Barr Harbor Drive, PO Box C700, West Conshohocken, PA 19428-2959, United States.

Copyright ASTM International
Provided by IHS under license with ASTM
No reproduction or networking permitted without license from IHS
Not for Resale

J978, Steel Self-Drilling Tapping Screws[5]

3. Terminology

3.1 For definitions of general terms used in this standard, refer to Terminology A 902.

3.2 *Definitions of Terms Specific to This Standard:*

3.2.1 *branch pipe*—corrugated pipe with a diameter smaller than or equal to that of the main pipe, carrying a portion of the flow and connected to the main pipe through a fitting welded in place.

3.2.2 *fittings*—sections of main pipe fabricated to accommodate branch pipes or manhole pipes.

3.2.3 *main pipe*—corrugated pipe carrying the primary flow.

3.2.4 *reinforcement*—sheets, bars, or structural members connected to the main pipe to strengthen a fitting.

4. Symbols

4.1 The symbols used in this practice have the following significance:

a = distance of saddle plate extension onto main pipe, in. [mm].
A_{li} = incremental required min cross section area of each longitudinal reinforcement, in^2/ft [mm^2/m].
A_{rc} = required minimum cross section area of each circumferential reinforcement, in^2 [mm^2].
A_{rcs} = cross section area of circumferential reinforcement actually selected, in^2 [mm^2].
A_{rl} = required min cross section area of each longitudinal reinforcement, in^2 [mm^2].
A_{rls} = cross section area of longitudinal reinforcement actually selected, in^2 [mm^2].
d = branch diameter, in. [mm].
d_b = nominal bolt diameter, in. [mm].
d_e = effective branch diameter, in. [mm].
d_m = maximum branch pipe diameter for which no circumferential reinforcement is required in. [mm].
d_s = nominal screw diameter, in. [mm].
D = main pipe diameter, in. [mm].
H = depth of fill above top of pipe, ft [m].
H_e = equivalent depth of fill, ft [m].
H_{nlr} = fill height for which no longitudinal reinforcement is required, ft [m].
L = total length of each longitudinal reinforcement, in. [mm].
L_w = length of weld, in. [mm].
LL = live load pressure (see Practice A 796/A 796M), lbf/ft^2 [kPa].
N_c = minimum total number of fasteners required to attach each circumferential reinforcement.
N_l = minimum total number of fasteners required to attach each longitudinal reinforcement.
q = allowable load for each fastener, lbf [N].
t_{np} = bare steel thickness of pipe, in. [mm].
t_{nr} = bare steel thickness of reinforcement in contact with pipe, in. [mm].
t_x = bare steel thickness of pipe or reinforcement, whichever is less, in. [mm].
w = unit force derived from 1 ft^3 [1 m^3] of fill material above the pipe, lbf/ft^3 [kN/m^3]. When actual fill material is not known use 120 lbf/ft^3 [19 kN/m^3].
α = acute angle between main and branch pipe, degrees.

5. Basis of Design

5.1 Reinforcement requirements depend upon pipe diameter, pipe wall profile, pipe wall thickness, density of fill material, height of cover, and live load. Main pipes with intersecting branch pipes shall be investigated in accordance with Section 6 to determine whether reinforcement is required. If reinforcement is required, it shall be designed in accordance with the provisions of Sections 9 and 10, unless one of the alternatives specified in Section 7 is met. Fittings in main pipes with a diameter less than 48 in. [1200 mm], subject to the limitations of 5.2-5.6, do not require reinforcement.

5.2 This practice does not apply to cases where there are two branch pipes on opposite sides of the main pipe, each with a diameter greater than 0.75D, unless the longitudinal distance between the centerlines of the branches measured along the main pipe is greater than D.

5.3 This practice is limited to pipe with a live load that can be described and quantified such as AASHTO H20 or HS20 and AREMA E80.

5.4 Reinforcement design shall be based on an equivalent depth of fill (H_e) that accounts for both earth load and live load (LL) as follows:

$$H_e = \frac{LL + wH}{120} \qquad \left[H_e = \frac{LL + wH}{19}\right] \tag{1}$$

This practice is limited to pipe with $H_e \leq 30$ ft [9 m].

5.5 Reinforcement design shall be based on an effective branch diameter (d_e) determined for the branch angle (α) as follows:

$$d_e = \frac{d}{\sin\alpha} \tag{2}$$

Calculated values of d_e shall be rounded up to the next 6 in. [150 mm] increment for design calculations. The value of d_e must not exceed 1.16D.

5.6 This practice is further limited to α from 30 to 90°, inclusive.

5.7 This practice applies where the branch pipe is welded to the main pipe and has a specified thickness based on the requirements of A 796/A 796M.

5.8 This practice does not include the possible effects of dragdown loads on vertical risers (manholes) such as caused by settlement of deep fills.

6. Need for Reinforcement

6.1 The need for both longitudinal and circumferential reinforcement as illustrated in Fig. 1 shall be considered.

6.2 Longitudinal reinforcement needs shall be determined from Tables 1-48 as applicable for the main pipe diameter and

[5] Available from Society of Automotive Engineers (SAE), 400 Commonwealth Dr., Warrendale, PA 15096-0001.

Copyright ASTM International
Provided by IHS under license with ASTM
No reproduction or networking permitted without license from IHS
Not for Resale

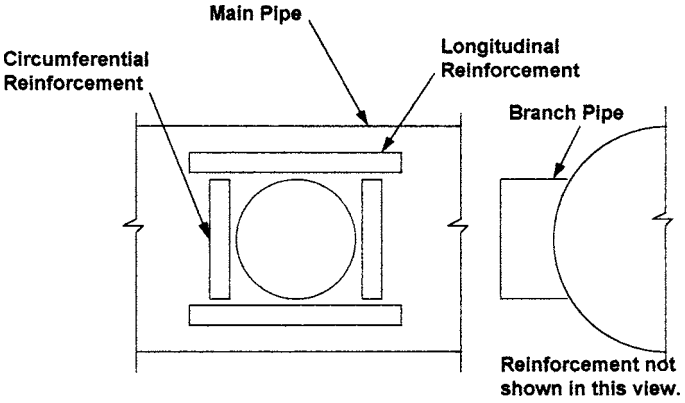

FIG. 1 Schematic of Reinforcements

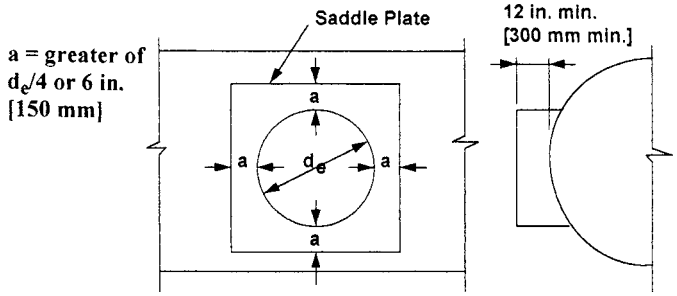

FIG. 2 Schematic of Saddle Plate

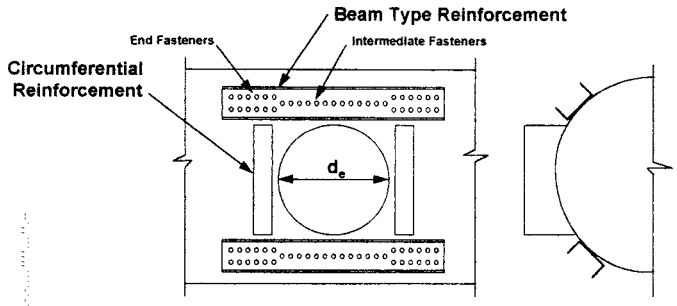

FIG. 3 Schematic of Beam Type Reinforcement

wall profile under consideration.[6] These tables list, for indicated branch pipe diameters, values of fill height, H_{nlr}, for which no longitudinal reinforcement is required. If $H_e \leq H_{nlr}$, no longitudinal reinforcement is required; otherwise, longitudinal reinforcement shall be designed in accordance with Section 9. For main pipe diameters not included in Tables 1-48, interpolation shall be permitted. Fittings for branch pipes with a diameter less than shown in Tables 1-48, subject to the limitations of 5.2-5.6, do not require longitudinal reinforcement.

6.3 Circumferential reinforcement needs shall be determined from Tables 49-54 as applicable for the wall profile under consideration.[6] These tables list, for indicated main pipe diameters and wall thicknesses, the maximum branch pipe diameters, d_m, for which no circumferential reinforcement is required. If $d_e \leq d_m$, no circumferential reinforcement is required; otherwise, circumferential reinforcement shall be designed in accordance with Section 10. Branch diameters are listed for equivalent depths of fill (H_e) of 10, 20, and 30 ft [3, 6, and 9 m]. Use the 10 ft [3 m] column for $1 \leq H_e \leq 10$ ft [$1 \leq H_e \leq 3$ m]. For other H_e not listed, interpolate between the values listed.

[6] The diameter-thickness combinations listed in the tables do not necessarily meet the requirements of A 796.

TABLE 1 Requirements for Longitudinal Reinforcement of Fittings in 48 in. Diameter Main Pipe with 2-⅔ by ½ in. Corrugations[A]

	Equivalent Fill Depth for Which No Longitudinal Reinforcement is Required, H_{nlr}, and Incremental Longitudinal Reinforcement Area, A_{li}									
	0.064 in. Thick Main Pipe		0.079 in. Thick Main Pipe		0.109 in. Thick Main Pipe		0.138 in. Thick Main Pipe		0.168 in. Thick Main Pipe	
Branch Dia., in	H_{nlr}, ft	A_{li}, in.^{2}/ft	H_{nlr}, ft	A_{li}, in.^{2}/ft	H_{nlr}, ft	A_{li}, in.^{2}/ft	H_{nlr}, ft	A_{li}, in.^{2}/ft	H_{nlr}, ft	A_{li}, in.^{2}/ft
24	37.4	0.05	48.2	0.04	69.1	0.04				
30	27.5	0.07	36.3	0.06	53.2	0.05				
36	22.2	0.10	29.6	0.09	39.2	0.07	50.0	0.06		
42	17.9	0.13	21.6	0.11	28.9	0.09	37.0	0.07	45.0	0.06
48	13.8	0.18	16.6	0.15	22.0	0.12	28.0	0.09	34.0	0.07

[A] Branch pipe of any profile with specified thickness as required by A 796/A 796M.

TABLE 2 Requirements for Longitudinal Reinforcement of Fittings in 1200 mm Diameter Main Pipe with 68 by 13 mm Corrugations[A]

	Equivalent Fill Depth for Which No Longitudinal Reinforcement is Required, H_{nlr}, and Incremental Longitudinal Reinforcement Area, A_{li}									
	1.63 mm Thick Main Pipe		2.01 mm Thick Main Pipe		2.77 mm Thick Main Pipe		3.51 mm Thick Main Pipe		4.27 mm Thick Main Pipe	
Branch Dia., mm	H_{nlr}, m	A_{li}, mm^2/m	H_{nlr}, m	A_{li}, mm^2/m	H_{nlr}, m	A_{li}, mm^2/m	H_{nlr}, m	A_{li}, mm^2/m	H_{nlr}, m	A_{li}, mm^2/m
600	11.4	106.	14.7	85.	21.1	85.				
750	8.4	148.	11.1	127.	16.2	106.				
900	6.8	212.	9.0	191.	11.9	148.	15.2	127.	18.6	106.
1050	5.5	275.	6.6	233.	8.8	191.	11.3	148.	13.7	127.
1200	4.2	381.	5.1	318.	6.7	254.	8.5	191.	10.4	148.

[A] Branch pipe of any profile with specified thickness as required by A 796/A 796M.

TABLE 3 Requirements for Longitudinal Reinforcement of Fittings in 60 in. Diameter Main Pipe with 2-⅔ by ½ in. Corrugations[A]

	Equivalent Fill Depth for Which No Longitudinal Reinforcement is Required, H_{nlr}, and Incremental Longitudinal Reinforcement Area, A_{li}									
	0.064 in. Thick Main Pipe		0.079 in. Thick Main Pipe		0.109 in. Thick Main Pipe		0.138 in. Thick Main Pipe		0.168 in. Thick Main Pipe	
Branch Dia., in.	H_{nlr}, ft	A_{li}, in.^{2}/ft	H_{nlr}, ft	A_{li}, in.^{2}/ft	H_{nlr}, ft	A_{li}, in.^{2}/ft	H_{nlr}, ft	A_{li}, in.^{2}/ft	H_{nlr}, ft	A_{li}, in.^{2}/ft
24	29.9	0.06	38.6	0.05	55.3	0.04				
30	22.0	0.09	29.0	0.08	42.6	0.06				
36	17.7	0.12	23.6	0.10	31.4	0.09	40.0	0.08		
42	14.3	0.16	17.3	0.14	23.1	0.11	29.0	0.09	35.0	0.07
48	11.0	0.21	13.3	0.18	17.6	0.14	22.0	0.10	27.0	0.08
54	8.7	0.27	10.5	0.22	14.0	0.17	18.0	0.12	22.0	0.10
60	7.0	0.33	8.5	0.28	11.3	0.21	14.0	0.15	17.0	0.12

[A] Branch pipe of any profile with specified thickness as required by A 796/A 796M.

Copyright ASTM International
Provided by IHS under license with ASTM
No reproduction or networking permitted without license from IHS
Not for Resale

TABLE 4 Requirements for Longitudinal Reinforcement of Fittings in 1500 mm Diameter Main Pipe with 68 by 13 mm Corrugations[A]

	Equivalent Fill Depth for Which No Longitudinal Reinforcement is Required, H_{nlr}, and Incremental Longitudinal Reinforcement Area, A_{li}									
	1.63 mm Thick Main Pipe		2.01 mm Thick Main Pipe		2.77 mm Thick Main Pipe		3.51 mm Thick Main Pipe		4.27 mm Thick Main Pipe	
Branch Dia., mm	H_{nlr}, m	A_{li}, mm²/m	H_{nlr}, m	A_{li}, mm²/m	H_{nlr}, m	A_{li}, mm²/m	H_{nlr}, m	A_{li}, mm²/m	H_{nlr}, m	A_{li}, mm²/m
600	9.l	127	11.8	106	16.9	85				
750	6.7	191	8.8	169	13.0	127				
900	5.4	254	7.2	212	9.6	191	12.2	169		
1050	4.4	339	5.3	296	7.0	233	8.8	191	10.7	148
1200	3.4	445	4.1	381	5.4	296	6.7	212	8.2	169
1350	2.7	572	3.2	466	4.3	360	5.5	254	6.7	212
1500	2.1	699	2.6	593	3.4	445	4.3	318	5.2	254

[A]Branch pipe of any profile with specified thickness as required by A 796/A 796M.

TABLE 5 Requirements for Longitudinal Reinforcement of Fittings in 72 in. Diameter Main Pipe with 2-⅔ by ½ in. Corrugations[A]

	Equivalent Fill Depth for Which No Longitudinal Reinforcement is Required, H_{nlr}, and Incremental Longitudinal Reinforcement Area, A_{li}									
	0.064 in. Thick Main Pipe		0.079 in. Thick Main Pipe		0.109 in. Thick Main Pipe		0.138 in. Thick Main Pipe		0.168 in. Thick Main Pipe	
Branch Dia., in.	H_{nlr}, ft	A_{li}, in.²/ft	H_{nlr}, ft	A_{li}, in.²/ft	H_{nlr}, ft	A_{li}, in.²/ft	H_{nlr}, ft	A_{li}, in.²/ft	H_{nlr}, ft	A_{li}, in.²/ft
24					46.1	0.05				
30					35.5	0.07				
36					26.1	0.10	33.0	0.08		
42					19.2	0.13	24.0	0.10	29.0	0.08
48					14.7	0.16	19.0	0.12	23.0	0.10
54					11.6	0.20	15.0	0.15	18.0	0.12
60					9.4	0.25	12.0	0.20	15.0	0.16
66					7.8	0.29	10.0	0.22	12.0	0.18
72					6.6	0.35	8.0	0.28	10.0	0.22

[A]Branch pipe of any profile with specified thickness as required by A 796/A 796M.

TABLE 6 Requirements for Longitudinal Reinforcement of Fittings in 1800 mm Diameter Main Pipe with 68 by 13 mm Corrugations[A]

	Equivalent Fill Depth for Which No Longitudinal Reinforcement is Required, H_{nlr}, and Incremental Longitudinal Reinforcement Area, A_{li}									
	1.63 mm Thick Main Pipe		2.01 mm Thick Main Pipe		2.77 mm Thick Main Pipe		3.51 mm Thick Main Pipe		4.27 mm Thick Main Pipe	
Branch Dia., mm	H_{nlr}, m	A_{li}, mm²/m	H_{nlr}, m	A_{li}, mm²/m	H_{nlr}, m	A_{li}, mm²/m	H_{nlr}, m	A_{li}, mm²/m	H_{nlr}, m	A_{li}, mm²/m
600					14.1	106				
750					10.8	148				
900					8.0	212	10.1	169		
1050					5.9	275	7.3	212	8.8	169
1200					4.5	339	5.8	254	7.0	212
1350					3.5	423	4.6	318	5.5	254
1500					2.9	529	3.7	423	4.6	339
1650					2.4	614	3.0	466	3.7	381
1800					2.0	741	2.4	593	3.0	466

[A]Branch pipe of any profile with specified thickness as required by A 796/A 796M.

7. Alternatives to Providing Reinforcement

7.1 As an alternative to providing required longitudinal or circumferential reinforcement, or both, an increase in the thickness of the main pipe shall be permitted. The increased thickness must be such that the pipe does not require reinforcement when checked in accordance with 6.2, if longitudinal reinforcement is omitted, and 6.3, if circumferential reinforcement is omitted.

TABLE 7 Requirements for Longitudinal Reinforcement of Fittings in 84 in. Diameter Main Pipe with 2-⅔ by ½ in. Corrugations[A]

	Equivalent Fill Depth for Which No Longitudinal Reinforcement is Required, H_{nlr}, and Incremental Longitudinal Reinforcement Area, A_{li}									
	0.064 in. Thick Main Pipe		0.079 in. Thick Main Pipe		0.109 in. Thick Main Pipe		0.138 in. Thick Main Pipe		0.168 in. Thick Main Pipe	
Branch Dia., in.	H_{nlr}, ft	A_{li}, in.²/ft	H_{nlr}, ft	A_{li}, in.²/ft	H_{nlr}, ft	A_{li}, in.²/ft	H_{nlr}, ft	A_{li}, in.²/ft	H_{nlr}, ft	A_{li}, in.²/ft
24					39.5	0.06				
30					30.4	0.09				
36					22.4	0.12	27.6	0.10		
42					16.5	0.15	20.3	0.13	25.0	0.10
48					12.6	0.19	15.5	0.16	19.0	0.13
54					10.0	0.23	12.3	0.20	15.0	0.16
60					8.1	0.28	10.0	0.24	12.0	0.19
66					6.6	0.33	8.2	0.28	10.0	0.22
72					5.6	0.39	6.9	0.33	8.0	0.26
78					4.8	0.46	5.9	0.38	7.0	0.30
84					4.1	0.54	5.1	0.44	6.0	0.35

[A]Branch pipe of any profile with specified thickness as required by A 796/A 796M.

TABLE 8 Requirements for Longitudinal Reinforcement of Fittings in 2100 mm Diameter Main Pipe with 68 by 13 mm Corrugations[A]

	Equivalent Fill Depth for Which No Longitudinal Reinforcement is Required, H_{nlr}, and Incremental Longitudinal Reinforcement Area, A_{li}									
	1.63 mm Thick Main Pipe		2.01 mm Thick Main Pipe		2.77 mm Thick Main Pipe		3.51 mm Thick Main Pipe		4.27 mm Thick Main Pipe	
Branch Dia., mm	H_{nlr}, m	A_{li}, mm²/m	H_{nlr}, m	A_{li}, mm²/m	H_{nlr}, m	A_{li}, mm²/m	H_{nlr}, m	A_{li}, mm²/m	H_{nlr}, m	A_{li}, mm²/m
600					12.0	127				
750					9.3	191				
900					6.8	254	8.4	212		
1050					5.0	318	6.2	275	7.6	212
1200					3.8	402	4.7	339	5.8	275
1350					3.0	487	3.7	423	4.6	339
1500					2.5	593	3.0	508	3.7	402
1650					2.0	699	2.5	593	3.0	466
1800					1.7	826	2.1	699	2.4	550
1950					1.5	974	1.8	804	2.1	635
2100					1.2	1143	1.6	931	1.8	741

[A]Branch pipe of any profile with specified thickness as required by A 796/A 796M.

7.2 As a second alternative to providing required longitudinal or circumferential reinforcement, or both, it is permissible to provide a saddle plate as illustrated in Fig. 2 with a thickness selected from Tables 55 and 56. Saddle plates that act as reinforcement must be of the same material and wall profile as the main pipe and must extend onto the main pipe on all sides from the branch pipe a distance, a, of $d_e/4$ or 6 in. [150 mm], whichever is greater. The saddle plate must be continuously welded to a stub length of the branch pipe. The stub must have a full uncut section at least 12 in. [300 mm] long. The saddle plate must be connected to the main pipe with sufficient fasteners (welds, bolts, or screws) so that there are no large gaps and so that it will act together with the main pipe.

Copyright ASTM International
Provided by IHS under license with ASTM
No reproduction or networking permitted without license from IHS
Not for Resale

TABLE 9 Requirements for Longitudinal Reinforcement of Fittings in 60 in. Diameter Main Pipe with 3 by 1 in. or 5 by 1 in. Corrugations[A]

Equivalent Fill Depth for Which No Longitudinal Reinforcement is Required, H_{nlr}, and Incremental Longitudinal Reinforcement Area, A_{li}										
	0.064 in. Thick Main Pipe		0.079 in. Thick Main Pipe		0.109 in. Thick Main Pipe		0.138 in. Thick Main Pipe		0.168 in. Thick Main Pipe	
Branch Dia., in.	H_{nlr}, ft	A_{li}, in.^{2}/ft	H_{nlr}, ft	A_{li}, in.^{2}/ft	H_{nlr}, ft	A_{li}, in.^{2}/ft	H_{nlr}, ft	A_{li}, in.^{2}/ft	H_{nlr}, ft	A_{li}, in.^{2}/ft
24	25.9	0.06	32.6	0.05	45.3	0.04				
30	18.0	0.09	23.0	0.08	32.6	0.06				
36	13.7	0.12	17.8	0.10	25.7	0.09	33.0	0.08		
42	11.2	0.16	14.7	0.14	21.5	0.11	27.0	0.09	33.0	0.07
48	9.5	0.21	12.6	0.18	17.6	0.14	22.0	0.10	27.0	0.08
54	8.7	0.27	10.5	0.22	14.0	0.17	18.0	0.12	18.0	0.10
60	7.0	0.33	8.5	0.28	11.3	0.21	14.0	0.15	14.0	0.12

[A]Branch pipe of any profile with specified thickness as required by A 796/A 796M.

TABLE 10 Requirements for Longitudinal Reinforcement of Fittings in 1500 mm Diameter Main Pipe with 75 by 25 mm or 125 by 25 mm Corrugations[A]

Equivalent Fill Depth for Which No Longitudinal Reinforcement is Required, H_{nlr}, and Incremental Longitudinal Reinforcement Area, A_{li}										
	1.63 mm Thick Main Pipe		2.01 mm Thick Main Pipe		2.77 mm Thick Main Pipe		3.51 mm Thick Main Pipe		4.27 mm Thick Main Pipe	
Branch Dia., mm	H_{nlr}, m	A_{li}, mm^2/m	H_{nlr}, m	A_{li}, mm^2/m	H_{nlr}, m	A_{li}, mm^2/m	H_{nlr}, m	A_{li}, mm^2/m	H_{nlr}, m	A_{li}, mm^2/m
600	7.9	127	9.9	106	13.8	85				
750	5.5	191	7.0	169	9.9	127				
900	4.2	254	5.4	212	7.8	191	10.1	169		
1050	3.4	339	4.5	296	6.6	233	8.2	191	10.1	148
1200	2.9	445	3.8	381	5.4	296	6.7	212	8.2	169
1350	2.7	572	3.2	466	4.3	360	5.5	254	5.5	212
1500	2.1	699	2.6	593	3.4	445	4.3	318	4.3	254

[A]Branch pipe of any profile with specified thickness as required by A 796/A 796M.

TABLE 11 Requirements for Longitudinal Reinforcement of Fittings in 72 in. Diameter Main Pipe with 3 by 1 in. or 5 by 1 in. Corrugations[A]

Equivalent Fill Depth for Which No Longitudinal Reinforcement is Required, H_{nlr}, and Incremental Longitudinal Reinforcement Area, A_{li}										
	0.064 in. Thick Main Pipe		0.079 in. Thick Main Pipe		0.109 in. Thick Main Pipe		0.138 in. Thick Main Pipe		0.168 in. Thick Main Pipe	
Branch Dia., in.	H_{nlr}, ft	A_{li}, in.^{2}/ft	H_{nlr}, ft	A_{li}, in.^{2}/ft	H_{nlr}, ft	A_{li}, in.^{2}/ft	H_{nlr}, ft	A_{li}, in.^{2}/ft	H_{nlr}, ft	A_{li}, in.^{2}/ft
24	21.6	0.07	27.1	0.06	37.7	0.05				
30	15.0	0.10	19.2	0.09	27.2	0.07				
36	11.5	0.14	14.8	0.12	21.4	0.10	27.0	0.08		
42	9.3	0.18	12.2	0.16	17.9	0.13	23.0	0.10	28.0	0.08
48	7.9	0.24	10.5	0.20	14.7	0.16	19.0	0.12	23.0	0.10
54	7.2	0.30	8.7	0.25	11.6	0.20	15.0	0.15	15.0	0.12
60	5.9	0.38	7.1	0.31	9.4	0.25	12.0	0.20	12.0	0.16
66	4.8	0.46	5.9	0.38	7.8	0.29	10.0	0.22	10.0	0.18
72	4.1	0.57	4.9	0.46	6.6	0.35	8.0	0.28	8.0	0.22

[A]Branch pipe of any profile with specified thickness as required by A 796/A 796M.

7.3 As an alternative to providing required longitudinal reinforcement, it is permissible to provide a beam type reinforcement as illustrated in Fig. 3, designed using recognized engineering principles.

TABLE 12 Requirements for Longitudinal Reinforcement of Fittings in 1800 mm Diameter Main Pipe with 75 by 25 mm or 125 by 25 mm Corrugations[A]

Equivalent Fill Depth for Which No Longitudinal Reinforcement is Required, H_{nlr}, and Incremental Longitudinal Reinforcement Area, A_{li}										
	1.63 mm Thick Main Pipe		2.01 mm Thick Main Pipe		2.77 mm Thick Main Pipe		3.51 mm Thick Main Pipe		4.27 mm Thick Main Pipe	
Branch Dia., mm	H_{nlr}, m	A_{li}, mm^2/m	H_{nlr}, m	A_{li}, mm^2/m	H_{nlr}, m	A_{li}, mm^2/m	H_{nlr}, m	A_{li}, mm^2/m	H_{nlr}, m	A_{li}, mm^2/m
600	6.6	148	8.3	127	11.5	106				
750	4.6	212	5.9	191	8.3	148				
900	3.5	296	4.5	254	6.5	212	8.2	169		
1050	2.8	381	3.7	339	5.5	275	7.0	212	8.5	169
1200	2.4	508	3.2	423	4.5	339	5.8	254	7.0	212
1350	2.2	635	2.7	529	3.5	423	4.6	318	4.6	254
1500	1.8	804	2.2	656	2.9	529	3.7	423	3.7	339
1650	1.5	974	1.8	804	2.4	614	3.0	466	3.0	381
1800	1.2	1207	1.5	974	2.0	741	2.4	593	2.4	466

[A]Branch pipe of any profile with specified thickness as required by A 796/A 796M.

TABLE 13 Requirements for Longitudinal Reinforcement of Fittings in 84 in. Diameter Main Pipe with 3 by 1 in. or 5 by 1 in. Corrugations[A]

Equivalent Fill Depth for Which No Longitudinal Reinforcement is Required, H_{nlr}, and Incremental Longitudinal Reinforcement Area, A_{li}										
	0.064 in. Thick Main Pipe		0.079 in. Thick Main Pipe		0.109 in. Thick Main Pipe		0.138 in. Thick Main Pipe		0.168 in. Thick Main Pipe	
Branch Dia., in.	H_{nlr}, ft	A_{li}, in.^{2}/ft	H_{nlr}, ft	A_{li}, in.^{2}/ft	H_{nlr}, ft	A_{li}, in.^{2}/ft	H_{nlr}, ft	A_{li}, in.^{2}/ft	H_{nlr}, ft	A_{li}, in.^{2}/ft
24	18.5	0.08	23.3	0.07	32.3	0.06				
30	12.9	0.11	16.4	0.10	23.3	0.09				
36	9.8	0.15	12.7	0.14	18.3	0.12	25.2	0.10		
42	8.0	0.21	10.5	0.18	15.4	0.15	20.3	0.13	25.0	0.10
48	6.8	0.27	9.0	0.23	12.6	0.19	15.5	0.16	19.0	0.13
54	6.2	0.34	7.5	0.29	10.0	0.23	12.3	0.20	15.0	0.16
60	5.0	0.42	6.1	0.35	8.1	0.28	10.0	0.24	12.0	0.19
66	4.1	0.51	5.0	0.43	6.6	0.33	8.2	0.28	10.0	0.22
72	3.5	0.62	4.2	0.51	5.6	0.39	6.9	0.33	8.0	0.26
78	2.9	0.75	3.6	0.61	4.8	0.46	5.9	0.38	7.0	0.30
84	2.5	0.89	3.1	0.72	4.1	0.54	5.1	0.44	6.0	0.35

[A]Branch pipe of any profile with specified thickness as required by A 796/A 796M.

8. Materials

8.1 Any reinforcement required shall be a continuous sheet, bar, or structural member. Sheets for longitudinal reinforcement shall be flat sheets, but either flat sheets or circumferentially corrugated sheets are permitted for circumferential reinforcement. Sheets for reinforcement shall meet the requirements of A 929/A 929M, having the same metallic coating as the pipe to which the reinforcement is attached. Structural members or bars for reinforcement shall meet the requirements of Specification A 36/A 36M. Reinforcement shall have suitable corrosion protection.

8.2 Mechanical fasteners used to attach reinforcement shall be galvanized in accordance with Specification A 153.

8.3 Welds used to attach reinforcement shall be cleaned and painted or otherwise protected to provide suitable durability.

9. Design of Longitudinal Reinforcement

9.1 Longitudinal reinforcement shall be aligned with the longitudinal axis of the main pipe. It shall be attached to the

Copyright ASTM International
Provided by IHS under license with ASTM
No reproduction or networking permitted without license from IHS
Not for Resale

TABLE 14 Requirements for Longitudinal Reinforcement of Fittings in 2100 mm Diameter Main Pipe with 75 by 25 mm or 125 by 2 mm Corrugations[A]

Equivalent Fill Depth for Which No Longitudinal Reinforcement is Required, H_{nlr}, and Incremental Longitudinal Reinforcement Area, A_{li}										
	1.63 mm Thick Main Pipe		2.01 mm Thick Main Pipe		2.77 mm Thick Main Pipe		3.51 mm Thick Main Pipe		4.27 mm Thick Main Pipe	
Branch Dia., mm	H_{nlr}, m	A_{li}, mm²/m	H_{nlr}, m	A_{li}, mm²/m	H_{nlr}, m	A_{li}, mm²/m	H_{nlr}, m	A_{li}, mm²/m	H_{nlr}, m	A_{li}, mm²/m
600	5.6	169	7.1	148	9.8	127				
750	3.9	233	5.0	212	7.1	191				
900	3.0	318	3.9	296	5.6	254	7.7	212		
1050	2.4	445	3.2	381	4.7	318	6.2	275	7.6	212
1200	2.1	572	2.7	487	3.8	402	4.7	339	5.8	275
1350	1.9	720	2.3	614	3.0	487	3.7	423	4.6	339
1500	1.5	889	1.9	741	2.5	593	3.0	508	3.7	402
1650	1.2	1080	1.5	910	2.0	699	2.5	593	3.0	466
1800	1.1	1313	1.3	1080	1.7	826	2.1	699	2.4	550
1950	0.9	1588	1.1	1291	1.5	974	1.8	804	2.1	635
2100	0.8	1884	0.9	1524	1.2	1143	1.6	931	1.8	741

[A]Branch pipe of any profile with specified thickness as required by A 796/A 796M.

TABLE 15 Requirements for Longitudinal Reinforcement of Fittings in 96 in. Diameter Main Pipe with 3 by 1 in. or 5 by 1 in. Corrugations[A]

Equivalent Fill Depth for Which No Longitudinal Reinforcement is Required, H_{nlr}, and Incremental Longitudinal Reinforcement Area, A_{li}										
	0.064 in. Thick Main Pipe		0.079 in. Thick Main Pipe		0.109 in. Thick Main Pipe		0.138 in. Thick Main Pipe		0.168 in. Thick Main Pipe	
Branch Dia., in.	H_{nlr}, ft	A_{li}, in.²/ft	H_{nlr}, ft	A_{li}, in.²/ft	H_{nlr}, ft	A_{li}, in.²/ft	H_{nlr}, ft	A_{li}, in.²/ft	H_{nlr}, ft	A_{li}, in.²/ft
24	16.2	0.08	20.4	0.07	28.3	0.06				
30	11.3	0.12	14.4	0.11	20.4	0.10				
36	8.6	0.17	11.1	0.15	16.1	0.13	22.1	0.11		
42	7.0	0.23	9.2	0.20	13.5	0.17	17.8	0.15	22.0	0.12
48	5.9	0.30	7.9	0.26	11.0	0.21	13.6	0.19	16.0	0.15
54	5.4	0.37	6.6	0.32	8.7	0.26	10.7	0.22	13.0	0.18
60	4.4	0.46	5.3	0.39	7.1	0.31	8.7	0.27	10.0	0.22
66	3.6	0.56	4.4	0.47	5.8	0.37	7.2	0.31	9.0	0.25
72	3.0	0.68	3.7	0.56	4.9	0.44	6.0	0.37	7.0	0.30
78	2.6	0.81	3.1	0.67	4.2	0.51	5.1	0.43	6.0	0.34
84	2.2	0.96	2.7	0.79	3.6	0.60	4.4	0.49	5.0	0.39
90	1.9	1.13	2.4	0.92	3.1	0.69	3.9	0.56	5.0	0.45
96	1.7	1.32	2.1	1.07	2.8	0.79	3.4	0.64	4.0	0.51

[A]Branch pipe of any profile with specified thickness as required by A 796/A 796M.

TABLE 16 Requirements for Longitudinal Reinforcement of Fittings in 2400 mm Diameter Main Pipe with 75 by 25 mm or 125 by 25 mm Corrugations[A]

Equivalent Fill Depth for Which No Longitudinal Reinforcement is Required, H_{nlr}, and Incremental Longitudinal Reinforcement Area, A_{li}										
	1.63 mm Thick Main Pipe		2.01 mm Thick Main Pipe		2.77 mm Thick Main Pipe		3.51 mm Thick Main Pipe		4.27 mm Thick Main Pipe	
Branch Dia., mm	H_{nlr}, m	A_{li}, mm²/m	H_{nlr}, m	A_{li}, mm²/m	H_{nlr}, m	A_{li}, mm²/m	H_{nlr}, m	A_{li}, mm²/m	H_{nlr}, m	A_{li}, mm²/m
600	4.9	169	6.2	148	8.6	127				
750	3.4	254	4.4	233	6.2	212				
900	2.6	360	3.4	318	4.9	275	6.7	233		
1050	2.1	487	2.8	423	4.1	360	5.4	318	6.7	254
1200	1.8	635	2.4	550	3.4	445	4.1	402	4.9	318
1350	1.6	783	2.0	677	2.7	550	3.3	466	4.0	381
1500	1.3	974	1.6	826	2.2	656	2.7	572	3.0	466
1650	1.1	1186	1.3	995	1.8	783	2.2	656	2.7	529
1800	0.9	1440	1.1	1186	1.5	931	1.8	783	2.1	635
1950	0.8	1715	0.9	1418	1.3	1080	1.6	910	1.8	720
2100	0.7	2032	0.8	1672	1.1	1270	1.3	1037	1.5	826
2250	0.6	2392	0.7	1948	0.9	1461	1.2	1186	1.5	953
2400	0.5	2794	0.6	2265	0.9	1672	1.0	1355	1.2	1080

[A]Branch pipe of any profile with specified thickness as required by A 796/A 796M.

TABLE 17 Requirements for Longitudinal Reinforcement of Fittings in 108 in. Diameter Main Pipe with 3 by 1 in. or 5 by 1 in. Corrugations[A]

Equivalent Fill Depth for Which No Longitudinal Reinforcement is Required, H_{nlr}, and Incremental Longitudinal Reinforcement Area, A_{li}										
	0.064 in. Thick Main Pipe		0.079 in. Thick Main Pipe		0.109 in. Thick Main Pipe		0.138 in. Thick Main Pipe		0.168 in. Thick Main Pipe	
Branch Dia., in.	H_{nlr}, ft	A_{li}, in.²/ft	H_{nlr}, ft	A_{li}, in.²/ft	H_{nlr}, ft	A_{li}, in.²/ft	H_{nlr}, ft	A_{li}, in.²/ft	H_{nlr}, ft	A_{li}, in.²/ft
24	14.4	0.09	18.1	0.08	25.2	0.07				
30	10.0	0.13	12.8	0.12	18.1	0.10				
36	7.6	0.19	9.9	0.17	14.3	0.14	19.6	0.13		
42	6.2	0.25	8.2	0.22	12.0	0.18	15.8	0.16	19.0	0.13
48	5.3	0.32	7.0	0.28	9.8	0.23	12.1	0.20	15.0	0.16
54	4.8	0.41	5.8	0.35	7.8	0.29	9.6	0.25	12.0	0.20
60	3.9	0.50	4.7	0.43	6.3	0.34	7.8	0.30	9.0	0.24
66	3.2	0.61	3.9	0.51	5.2	0.41	6.4	0.35	8.0	0.28
72	2.7	0.73	3.3	0.61	4.4	0.48	5.4	0.41	7.0	0.33
78	2.3	0.87	2.8	0.72	3.7	0.56	4.6	0.47	6.0	0.38
84	2.0	1.03	2.4	0.85	3.2	0.65	4.0	0.54	5.0	0.43
90	1.7	1.21	2.1	0.99	2.8	0.75	3.5	0.62	4.0	0.50
96	1.5	1.41	1.9	1.15	2.5	0.86	3.0	0.70	4.0	0.56
102	1.4	1.62	1.6	1.32	2.2	0.98	2.7	0.79	3.0	0.64
108	1.2	1.87	1.5	1.51	1.9	1.11	2.4	0.89	3.0	0.72

[A]Branch pipe of any profile with specified thickness as required by A 796/A 796M.

main pipe above and below the branch pipe, and in close proximity thereto. It may be located either inside or outside of the pipe. Each reinforcement shall have the minimum length specified in 9.2 and the minimum cross section area specified in 9.3. It shall be attached to the main pipe with fasteners (welds, bolts, or screws) as specified in 9.4.

9.2 The minimum total length (L) of each longitudinal reinforcement shall be determined as follows:

$$L = 1.5d_e \quad \text{for } 1 < H_e \le 10 \qquad (3)$$
$$[L = 1.5d_e \quad \text{for } 1 < H_e \le 3]$$

$$L = 1.5d_e + (H_e - 10)(d_e/20) \quad \text{for } 10 < H_e \le 30 \qquad (4)$$
$$[L = 1.5d_e + (H_e - 3)(d_e/6) \quad \text{for } 3 < H_e \le 9]$$

9.3 The minimum cross section area (A_{rl}) of each longitudinal reinforcement shall be determined as follows:

$$A_{rl} = A_{li}(H_e - H_{nlr}) \qquad (5)$$

where: A_{li} is the incremental required minimum cross section area, and H_{nlr} is the fill height for which no longitudinal reinforcement is required, both as listed in Tables 1-48, as applicable for the main pipe diameter, wall profile, and wall thickness under consideration.

9.4 Each longitudinal reinforcement shall be attached to the main pipe with a total number of fasteners (N_l) not less than that determined as follows:

$$N_l = 50\,000A_{rls}/q \qquad [N_l = 0.345A_{rls}/q] \qquad (6)$$

where: A_{rls} is the cross section area of the longitudinal reinforcement actually selected and q is the allowable load for

Copyright ASTM International
Provided by IHS under license with ASTM
No reproduction or networking permitted without license from IHS
Not for Resale

TABLE 18 Requirements for Longitudinal Reinforcement of Fittings in 2700 mm Diameter Main Pipe with 75 by 25 mm or 125 by 25 mm Corrugations[A]

Equivalent Fill Depth for Which No Longitudinal Reinforcement is Required, H_{nlr}, and Incremental Longitudinal Reinforcement Area, A_{li}										
	1.63 mm Thick Main Pipe		2.01 mm Thick Main Pipe		2.77 mm Thick Main Pipe		3.51 mm Thick Main Pipe		4.27 mm Thick Main Pipe	
Branch Dia., mm	H_{nlr}, m	A_{li}, mm²/m	H_{nlr}, m	A_{li}, mm²/m	H_{nlr}, m	A_{li}, mm²/m	H_{nlr}, m	A_{li}, mm²/m	H_{nlr}, m	A_{li}, mm²/m
600	4.4	191	5.5	169	7.7	148				
750	3.0	275	3.9	254	5.5	212				
900	2.3	402	3.0	360	4.4	296	6.0	275		
1050	1.9	529	2.5	466	3.7	381	4.8	339	5.8	275
1200	1.6	677	2.1	593	3.0	487	3.7	423	4.6	339
1350	1.5	868	1.8	741	2.4	614	2.9	529	3.7	423
1500	1.2	1059	1.4	910	1.9	720	2.4	635	2.7	508
1650	1.0	1291	1.2	1080	1.6	868	2.0	741	2.4	593
1800	0.8	1545	1.0	1291	1.3	1016	1.6	868	2.1	699
1950	0.7	1842	0.9	1524	1.1	1186	1.4	995	1.8	804
2100	0.6	2181	0.7	1799	1.0	1376	1.2	1143	1.5	910
2250	0.5	2562	0.6	2096	0.9	1588	1.1	1313	1.2	1059
2400	0.5	2985	0.6	2435	0.8	1821	0.9	1482	1.2	1186
2550	0.4	3430	0.5	2794	0.7	2075	0.8	1672	0.9	1355
2700	0.4	3959	0.5	3197	0.6	2350	0.7	1884	0.9	1524

[A]Branch pipe of any profile with specified thickness as required by A 796/A 796M.

TABLE 19 Requirements for Longitudinal Reinforcement of Fittings in 120 in. Diameter Main Pipe with 3 by 1 in. or 5 by 1 in. Corrugations[A]

Equivalent Fill Depth for Which No Longitudinal Reinforcement is Required, H_{nlr}, and Incremental Longitudinal Reinforcement Area, A_{li}										
	0.064 in. Thick Main Pipe		0.079 in. Thick Main Pipe		0.109 in. Thick Main Pipe		0.138 in. Thick Main Pipe		0.168 in. Thick Main Pipe	
Branch Dia., in.	H_{nlr}, ft	A_{li}, in.²/ft	H_{nlr}, ft	A_{li}, in.²/ft	H_{nlr}, ft	A_{li}, in.²/ft	H_{nlr}, ft	A_{li}, in.²/ft	H_{nlr}, ft	A_{li}, in.²/ft
24	13.0	0.10	16.3	0.09	22.6	0.08				
30	9.0	0.14	11.5	0.13	16.3	0.11				
36	6.9	0.20	8.9	0.18	12.8	0.15	17.7	0.14		
42	5.6	0.27	7.3	0.24	10.8	0.20	14.2	0.18	16.8	0.16
48	4.7	0.34	6.3	0.30	8.8	0.25	10.9	0.22	12.8	0.20
54	4.3	0.43	5.2	0.38	7.0	0.31	8.6	0.27	10.1	0.24
60	3.5	0.54	4.3	0.46	5.6	0.38	7.0	0.33	8.2	0.29
66	2.9	0.65	3.5	0.56	4.7	0.44	5.7	0.38	6.8	0.34
72	2.4	0.78	3.0	0.66	3.9	0.52	4.8	0.44	5.7	0.39
78	2.1	0.93	2.5	0.78	3.3	0.61	4.1	0.51	4.9	0.45
84	1.8	1.10	2.2	0.91	2.9	0.70	3.6	0.59	4.2	0.51
90	1.6	1.29	1.9	1.06	2.5	0.81	3.1	0.67	3.6	0.58
96	1.4	1.49	1.7	1.22	2.2	0.92	2.7	0.76	3.2	0.66
102	1.2	1.72	1.5	1.40	2.0	1.05	2.4	0.86	2.9	0.74
108	1.1	1.98	1.3	1.60	1.8	1.19	2.2	0.96	2.5	0.82
114	1.0	2.26	1.2	1.82	1.6	1.34	1.9	1.08	2.3	0.92
120	0.9	2.56	1.1	2.06	1.4	1.50	1.8	1.21	2.1	1.02

[A]Branch pipe of any profile with specified thickness as required by A 796/A 796M.

each fastener as provided in Section 12. The total area of bolt holes, screw holes, or slots for fillet welds on any cross section of the reinforcement shall not exceed 20 % of the cross section area of the reinforcement.

10. Design of Circumferential Reinforcement

10.1 Circumferential reinforcement shall be formed to the approximate radius of the main pipe. However, flat sheet type reinforcement can be hand formed as it is attached. Circumferential reinforcement shall be attached to the main pipe on

TABLE 20 Requirements for Longitudinal Reinforcement of Fittings in 3000 mm Diameter Main Pipe with 75 by 25 mm or 125 by 25 mm Corrugations[A]

Equivalent Fill Depth for Which No Longitudinal Reinforcement is Required, H_{nlr}, and Incremental Longitudinal Reinforcement Area, A_{li}										
	1.63 mm Thick Main Pipe		2.01 mm Thick Main Pipe		2.77 mm Thick Main Pipe		3.51 mm Thick Main Pipe		4.27 mm Thick Main Pipe	
Branch Dia., mm	H_{nlr}, m	A_{li}, mm²/m	H_{nlr}, m	A_{li}, mm²/m	H_{nlr}, m	A_{li}, mm²/m	H_{nlr}, m	A_{li}, mm²/m	H_{nlr}, m	A_{li}, mm²/m
600	4.0	212	5.0	191	6.9	169				
750	2.7	296	3.5	275	5.0	233				
900	2.1	423	2.7	381	3.9	318	5.4	296		
1050	1.7	572	2.2	508	3.3	423	4.3	381	5.1	339
1200	1.4	720	1.9	635	2.7	529	3.3	466	3.9	423
1350	1.3	910	1.6	804	2.1	656	2.6	572	3.1	508
1500	1.1	1143	1.3	974	1.7	804	2.1	699	2.5	614
1650	0.9	1376	1.1	1186	1.4	931	1.7	804	2.1	720
1800	0.7	1651	0.9	1397	1.2	1101	1.5	931	1.7	826
1950	0.6	1969	0.8	1651	1.0	1291	1.2	1080	1.5	953
2100	0.5	2329	0.7	1926	0.9	1482	1.1	1249	1.3	1080
2250	0.5	2731	0.6	2244	0.8	1715	0.9	1418	1.1	1228
2400	0.4	3154	0.5	2583	0.7	1948	0.8	1609	1.0	1397
2550	0.4	3641	0.5	2964	0.6	2223	0.7	1821	0.9	1567
2700	0.3	4192	0.4	3387	0.5	2519	0.7	2032	0.8	1736
2850	0.3	4784	0.4	3853	0.5	2837	0.6	2286	0.7	1948
3000	0.3	5420	0.3	4361	0.4	3176	0.5	2562	0.6	2159

[A]Branch pipe of any profile with specified thickness as required by A 796/A 796M.

TABLE 21 Requirements for Longitudinal Reinforcement of Fittings in 132 in. Diameter Main Pipe with 3 by 1 in. or 5 by 1 in. Corrugations[A]

Equivalent Fill Depth for Which No Longitudinal Reinforcement is Required, H_{nlr}, and Incremental Longitudinal Reinforcement Area, A_{li}										
	0.064 in. Thick Main Pipe		0.079 in. Thick Main Pipe		0.109 in. Thick Main Pipe		0.138 in. Thick Main Pipe		0.168 in. Thick Main Pipe	
Branch Dia., in.	H_{nlr}, ft	A_{li}, in.²/ft	H_{nlr}, ft	A_{li}, in.²/ft	H_{nlr}, ft	A_{li}, in.²/ft	H_{nlr}, ft	A_{li}, in.²/ft	H_{nlr}, ft	A_{li}, in.²/ft
24			14.8	0.09	20.6	0.08				
30			10.4	0.14	14.8	0.12				
36			8.1	0.19	11.7	0.16	16.1	0.15		
42			6.7	0.25	9.8	0.21	13.7	0.19	15.3	0.17
48			5.7	0.32	8.0	0.27	9.9	0.24	11.7	0.22
54			4.8	0.40	6.3	0.33	7.8	0.29	9.2	0.26
60			3.9	0.49	5.1	0.40	6.3	0.35	7.5	0.31
66			3.2	0.60	4.2	0.48	5.2	0.42	6.2	0.37
72			2.7	0.71	3.6	0.56	4.4	0.48	5.2	0.43
78			2.3	0.83	3.0	0.65	3.7	0.55	4.4	0.49
84			2.0	0.97	2.6	0.75	3.2	0.63	3.8	0.56
90			1.7	1.13	2.3	0.86	2.8	0.72	3.3	0.63
96			1.5	1.30	2.0	0.98	2.5	0.82	2.9	0.71
102			1.3	1.49	1.8	1.12	2.2	0.92	2.6	0.79
108			1.2	1.70	1.6	1.26	2.0	1.03	2.3	0.89
114			1.1	1.92	1.4	1.42	1.7	1.16	2.1	0.99
120			1.0	2.17	1.3	1.59	1.6	1.29	1.9	1.09
126			0.9	2.44	1.2	1.78	1.4	1.43	1.7	1.21
132			0.8	2.73	1.1	1.98	1.3	1.58	1.5	1.33

[A]Branch pipe of any profile with specified thickness as required by A 796/A 796M.

both sides of the branch pipe, in close proximity thereto, and shall extend around the main pipe approximately the same distance as the opening cut for the branch pipe. It shall have sufficient length to essentially fill the distance between any longitudinal reinforcements present, but need not bear on such reinforcements. Circumferential reinforcement is preferably placed on the outside of the pipe. Each reinforcement shall

Copyright ASTM International
Provided by IHS under license with ASTM
No reproduction or networking permitted without license from IHS
Not for Resale

TABLE 22 Requirements for Longitudinal Reinforcement of Fittings in 3300 mm Diameter Main Pipe with 75 by 25 mm or 125 by 25 mm Corrugations[A]

Equivalent Fill Depth for Which No Longitudinal Reinforcement is Required, H_{nlr}, and Incremental Longitudinal Reinforcement Area, A_{li}									
	1.63 mm Thick Main Pipe		2.01 mm Thick Main Pipe		2.77 mm Thick Main Pipe		3.51 mm Thick Main Pipe		4.27 mm Thick Main Pipe	
Branch Dia., mm	H_{nlr}, m	A_{li}, mm²/m	H_{nlr}, m	A_{li}, mm²/m	H_{nlr}, m	A_{li}, mm²/m	H_{nlr}, m	A_{li}, mm²/m	H_{nlr}, m	A_{li}, mm²/m
600			4.5	191	6.3	169				
750			3.2	296	4.5	254				
900			2.5	402	3.6	339	4.9	318		
1050			2.0	529	3.0	445	4.2	402	4.7	360
1200			1.7	677	2.4	572	3.0	508	3.6	466
1350			1.5	847	1.9	699	2.4	614	2.8	550
1500			1.2	1037	1.6	847	1.9	741	2.3	656
1650			1.0	1270	1.3	1016	1.6	889	1.9	783
1800			0.8	1503	1.1	1186	1.3	1016	1.6	910
1950			0.7	1757	0.9	1376	1.1	1164	1.3	1037
2100			0.6	2053	0.8	1588	1.0	1334	1.2	1186
2250			0.5	2392	0.7	1821	0.9	1524	1.0	1334
2400			0.5	2752	0.6	2075	0.8	1736	0.9	1503
2550			0.4	3154	0.5	2371	0.7	1948	0.8	1672
2700			0.4	3599	0.5	2667	0.6	2181	0.7	1884
2850			0.3	4065	0.4	3006	0.5	2456	0.6	2096
3000			0.3	4594	0.4	3366	0.5	2731	0.6	2308
3150			0.3	5165	0.4	3768	0.4	3027	0.5	2562
3300			0.2	5779	0.3	4192	0.4	3345	0.5	2816

[A]Branch pipe of any profile with specified thickness as required by A 796/A 796M.

TABLE 23 Requirements for Longitudinal Reinforcement of Fittings in 144 in. Diameter Main Pipe with 3 by 1 in. or 5 by 1 in. Corrugations[A]

Equivalent Fill Depth for Which No Longitudinal Reinforcement is Required, H_{nlr}, and Incremental Longitudinal Reinforcement Area, A_{li}										
	0.064 in. Thick Main Pipe		0.079 in. Thick Main Pipe		0.109 in. Thick Main Pipe		0.138 in. Thick Main Pipe		0.168 in. Thick Main Pipe	
Branch Dia., in.	H_{nlr}, ft	A_{li}, in.²/ft	H_{nlr}, ft	A_{li}, in.²/ft	H_{nlr}, ft	A_{li}, in.²/ft	H_{nlr}, ft	A_{li}, in.²/ft	H_{nlr}, ft	A_{li}, in.²/ft
24					18.9	0.08				
30					13.6	0.13				
36					10.7	0.17	14.7	0.16		
42					9.0	0.23	12.6	0.20	14.0	0.19
48					7.3	0.29	9.1	0.26	10.7	0.23
54					5.8	0.35	7.2	0.31	8.4	0.28
60					4.7	0.43	5.8	0.37	6.8	0.34
66					3.9	0.51	4.8	0.44	5.7	0.40
72					3.3	0.60	4.0	0.52	4.7	0.46
78					2.8	0.70	3.4	0.60	4.0	0.53
84					2.4	0.81	3.0	0.68	3.5	0.60
90					2.1	0.92	2.6	0.77	3.1	0.68
96					1.9	1.05	2.3	0.87	2.7	0.76
102					1.6	1.19	2.0	0.98	2.4	0.85
108					1.5	1.34	1.8	1.10	2.1	0.95
114					1.3	1.51	1.6	1.23	1.9	1.05
120					1.2	1.68	1.4	1.37	1.7	1.17
126					1.1	1.88	1.3	1.52	1.5	1.29
132					1.0	2.09	1.2	1.68	1.4	1.42
138					0.9	2.31	1.1	1.85	1.3	1.56
144					0.8	2.55	1.0	2.03	1.2	1.70

[A]Branch pipe of any profile with specified thickness as required by A 796/A 796M.

have the minimum cross section area specified in 10.2. It shall be attached to the main pipe with fasteners (welds, bolts, or screws) as specified in 10.3.

TABLE 24 Requirements for Longitudinal Reinforcement of Fittings in 3600 mm Diameter Main Pipe with 75 by 25 mm or 125 by 25 mm Corrugations[A]

Equivalent Fill Depth for Which No Longitudinal Reinforcement is Required, H_{nlr}, and Incremental Longitudinal Reinforcement Area, A_{li}										
	1.63 mm Thick Main Pipe		2.01 mm Thick Main Pipe		2.77 mm Thick Main Pipe		3.51 mm Thick Main Pipe		4.27 mm Thick Main Pipe	
Branch Dia., mm	H_{nlr}, m	A_{li}, mm²/m	H_{nlr}, m	A_{li}, mm²/m	H_{nlr}, m	A_{li}, mm²/m	H_{nlr}, m	A_{li}, mm²/m	H_{nlr}, m	A_{li}, mm²/m
600					5.8	169				
750					4.1	275				
900					3.3	360	4.5	339		
1050					2.7	487	3.8	423	4.3	402
1200					2.2	614	2.8	550	3.3	487
1350					1.8	741	2.2	656	2.6	593
1500					1.4	910	1.8	783	2.1	720
1650					1.2	1080	1.5	931	1.7	847
1800					1.0	1270	1.2	1101	1.4	974
1950					0.9	1482	1.0	1270	1.2	1122
2100					0.7	1715	0.9	1440	1.1	1270
2250					0.6	1948	0.8	1630	0.9	1440
2400					0.6	2223	0.7	1842	0.8	1609
2550					0.5	2519	0.6	2075	0.7	1799
2700					0.5	2837	0.5	2329	0.6	2011
2850					0.4	3197	0.5	2604	0.6	2223
3000					0.4	3557	0.4	2900	0.5	2477
3150					0.3	3980	0.4	3218	0.5	2731
3300					0.3	4425	0.4	3557	0.4	3006
3450					0.3	4890	0.3	3916	0.4	3303
3600					0.2	5398	0.3	4298	0.4	3599

[A]Branch pipe of any profile with specified thickness as required by A 796/A 796M.

TABLE 25 Requirements for Longitudinal Reinforcement of Fittings in 48 in. Diameter Main Pipe with ¾ by ¾ by 7-½ in. Ribs[A]

Equivalent Fill Depth for Which No Longitudinal Reinforcement is Required, H_{nlr}, and Incremental Longitudinal Reinforcement Area, A_{li}										
	0.064 in. Thick Main Pipe		0.079 in. Thick Main Pipe		0.109 in. Thick Main Pipe		0.138 in. Thick Main Pipe		0.168 in. Thick Main Pipe	
Branch Dia., in.	H_{nlr}, ft	A_{li}, in.²/ft	H_{nlr}, ft	A_{li}, in.²/ft	H_{nlr}, ft	A_{li}, in.²/ft	H_{nlr}, ft	A_{li}, in.²/ft	H_{nlr}, ft	A_{li}, in.²/ft
24	30.4	0.07	37.7	0.05						
30	20.5	0.10	25.8	0.08						
36	15.2	0.10	19.3	0.12						
42	11.9	0.18	15.3	0.14	21.9	0.10				
48	9.9	0.25	12.8	0.20	18.5	0.13				

[A]Branch pipe of any profile with specified thickness as required by A 796/A 796M.

10.2 The minimum cross section area (A_{rc}) of each circumferential reinforcement shall be determined as follows:

$$A_{\mathrm{rc}} = \left(\frac{H_e D d_e}{96\,000}\right)\left(\frac{d_e - d_m}{d_e}\right) \quad \left[A_{rc} = \left(\frac{H_e D d_e}{29\,260}\right)\left(\frac{d_e - d_m}{d_e}\right)\right] \tag{7}$$

where:

D is the main pipe diameter, and

d_m is the maximum branch diameter for which no circumferential reinforcement is required, as listed in Tables 49-54 as applicable for the main pipe diameter, wall profile, and wall thickness under consideration.

10.3 Each circumferential reinforcement shall be attached to the main pipe with a total number of fasteners (N_c) not less than that determined as follows:

Copyright ASTM International
Provided by IHS under license with ASTM
No reproduction or networking permitted without license from IHS
Not for Resale

TABLE 26 Requirements for Longitudinal Reinforcement of Fittings in 1200 mm Diameter Main Pipe with 19 by 19 by 190 mm Ribs[A]

Equivalent Fill Depth for Which No Longitudinal Reinforcement is Required, H_{nlr}, and Incremental Longitudinal Reinforcement Area, A_{li}

	1.63 mm Thick Main Pipe		2.01 mm Thick Main Pipe		2.77 mm Thick Main Pipe		3.51 mm Thick Main Pipe		4.27 mm Thick Main Pipe	
Branch Dia., mm	H_{nlr}, m	A_{li}, mm²/m	H_{nlr}, m	A_{li}, mm²/m	H_{nlr}, m	A_{li}, mm²/m	H_{nlr}, m	A_{li}, mm²/m	H_{nlr}, m	A_{li}, mm²/m
600	9.3	148	11.5	106						
750	6.2	212	7.9	169						
900	4.6	212	5.9	254						
1050	3.6	381	4.7	296	6.7	212				
1200	3.0	529	3.9	423	5.6	275				

[A]Branch pipe of any profile with specified thickness as required by A 796/A 796M.

TABLE 27 Requirements for Longitudinal Reinforcement of Fittings in 60 in. Diameter Main Pipe with ¾ by ¾ by 7-½ in. Ribs[A]

Equivalent Fill Depth for Which No Longitudinal Reinforcement is Required, H_{nlr}, and Incremental Longitudinal Reinforcement Area, A_{li}

	0.064 in. Thick Main Pipe		0.079 in. Thick Main Pipe		0.109 in. Thick Main Pipe		0.138 in. Thick Main Pipe		0.168 in. Thick Main Pipe	
Branch Dia., in.	H_{nlr}, ft	A_{li}, in.²/ft	H_{nlr}, ft	A_{li}, in.²/ft	H_{nlr}, ft	A_{li}, in.²/ft	H_{nlr}, ft	A_{li}, in.²/ft	H_{nlr}, ft	A_{li}, in.²/ft
24	24.3	0.08	30.2	0.06						
30	16.4	0.13	20.6	0.10						
36	12.1	0.17	15.4	0.13						
42	9.6	0.16	12.3	0.18	17.5	0.12				
48	7.9	0.22	10.2	0.23	14.8	0.15				
54	6.7	0.38	8.8	0.29	13.0	0.19				
60	5.9	0.46	7.9	0.36	11.3	0.23				

[A]Branch pipe of any profile with specified thickness as required by A 796/A 796M.

TABLE 28 Requirements for Longitudinal Reinforcement of Fittings in 1500 mm Diameter Main Pipe with 19 by 19 by 190 mm Ribs[A]

Equivalent Fill Depth for Which No Longitudinal Reinforcement is Required, H_{nlr}, and Incremental Longitudinal Reinforcement Area, A_{li}

	1.63 mm Thick Main Pipe		2.01 mm Thick Main Pipe		2.77 mm Thick Main Pipe		3.51 mm Thick Main Pipe		4.27 mm Thick Main Pipe	
Branch Dia., mm	H_{nlr}, m	A_{li}, mm²/m	H_{nlr}, m	A_{li}, mm²/m	H_{nlr}, m	A_{li}, mm²/m	H_{nlr}, m	A_{li}, mm²/m	H_{nlr}, m	A_{li}, mm²/m
600	7.4	169	9.2	127						
750	5.0	275	6.3	212						
900	3.7	360	4.7	275						
1050	2.9	339	3.7	381	5.3	254				
1200	2.4	466	3.1	487	4.5	318				
1350	2.0	804	2.7	614	4.0	402				
1500	1.8	974	2.4	762	3.4	487				

[A]Branch pipe of any profile with specified thickness as required by A 796/A 796M.

$$N_c = 40\,000A_{rcs}/q \quad [N_c = 0.276A_{rcs}/q] \tag{8}$$

where: A_{rcs} is the cross section area of the circumferential reinforcement actually selected, and

q is the allowable load for each fastener as provided in Section 12. The spacing between fasteners in a row shall not exceed 12 in. [25 mm]; additionally, for flat material, the spacing shall not exceed 44 times the sheet thickness. Flat material shall have a minimum of two rows of fasteners.

TABLE 29 Requirements for Longitudinal Reinforcement of Fittings in 72 in. Diameter Main Pipe with ¾ by ¾ by 7-½ in. Ribs[A]

Equivalent Fill Depth for Which No Longitudinal Reinforcement is Required, H_{nlr}, and Incremental Longitudinal Reinforcement Area, A_{li}

	0.064 in. Thick Main Pipe		0.079 in. Thick Main Pipe		0.109 in. Thick Main Pipe		0.138 in. Thick Main Pipe		0.168 in. Thick Main Pipe	
Branch Dia., in.	H_{nlr}, ft	A_{li}, in.²/ft	H_{nlr}, ft	A_{li}, in.²/ft	H_{nlr}, ft	A_{li}, in.²/ft	H_{nlr}, ft	A_{li}, in.²/ft	H_{nlr}, ft	A_{li}, in.²/ft
24			24.4	0.08						
30			16.4	0.12						
36			12.1	0.16						
42			9.5	0.21	13.3	0.14				
48			7.8	0.26	11.1	0.18				
54			6.6	0.32	9.5	0.22				
60			5.8	0.40	8.4	0.28				
66			5.2	0.49	7.6	0.32				
72			4.7	0.60	6.6	0.38				

[A]Branch pipe of any profile with specified thickness as required by A 796/A 796M.

TABLE 30 Requirements for Longitudinal Reinforcement of Fittings in 1800 mm Diameter Main Pipe with 19 by 19 by 190 mm Ribs[A]

Equivalent Fill Depth for Which No Longitudinal Reinforcement is Required, H_{nlr}, and Incremental Longitudinal Reinforcement Area, A_{li}

	1.63 mm Thick Main Pipe		2.01 mm Thick Main Pipe		2.77 mm Thick Main Pipe		3.51 mm Thick Main Pipe		4.27 mm Thick Main Pipe	
Branch Dia., mm	H_{nlr}, m	A_{li}, mm²/m	H_{nlr}, m	A_{li}, mm²/m	H_{nlr}, m	A_{li}, mm²/m	H_{nlr}, m	A_{li}, mm²/m	H_{nlr}, m	A_{li}, mm²/m
600			7.4	169						
750			5.0	254						
900			3.7	339						
1050			2.9	445	4.1	296				
1200			2.4	550	3.4	381				
1350			2.0	677	2.9	466				
1500			1.8	847	2.6	593				
1650			1.6	1037	2.3	677				
1800			1.4	1270	2.0	804				

[A]Branch pipe of any profile with specified thickness as required by A 796/A 796M.

11. Multiple Reinforcements

11.1 Fig. 4 illustrates the use of reinforcements for multiple branches. Where two or more branches in a row are encountered, the longitudinal reinforcement above and below the branch shall be either a continuous member or multiple members with splices that develop the full tensile strength of the reinforcement. The reinforcement for the first and last branch in the row shall extend, from the centerline of the branch to the end, a distance equal to one-half the reinforcement length specified in 9.2. Likewise, over each of these half lengths, use half the total number of fasteners specified in 9.4 and maintain the same fastener pattern and spacing throughout the entire length of the reinforcement. Circumferential reinforcement placement and attachment remains the same for single or multiple branches.

Copyright ASTM International
Provided by IHS under license with ASTM
No reproduction or networking permitted without license from IHS
Not for Resale

TABLE 31 Requirements for Longitudinal Reinforcement of Fittings in 84 in. Diameter Main Pipe with ¾ by ¾ by 7-½ in. Ribs[A]

Equivalent Fill Depth for Which No Longitudinal Reinforcement is Required, H_{nlr}, and Incremental Longitudinal Reinforcement Area, A_{li}										
	0.064 in. Thick Main Pipe		0.079 in. Thick Main Pipe		0.109 in. Thick Main Pipe		0.138 in. Thick Main Pipe		0.168 in. Thick Main Pipe	
Branch Dia., in.	H_{nlr}, ft	A_{li}, in.^{2}/ft	H_{nlr}, ft	A_{li}, in.^{2}/ft	H_{nlr}, ft	A_{li}, in.^{2}/ft	H_{nlr}, ft	A_{li}, in.^{2}/ft	H_{nlr}, ft	A_{li}, in.^{2}/ft
24			20.9	0.09						
30			14.1	0.13						
36			10.4	0.18						
42			8.1	0.25	11.4	0.16				
48			6.7	0.30	9.5	0.21				
54			5.7	0.38	8.2	0.25				
60			5.0	0.45	7.2	0.31				
66			4.5	0.56	6.5	0.36				
72			4.1	0.66	5.6	0.43	6.9	0.33		
78			3.6	0.79	4.8	0.51	5.9	0.38		
84			3.1	0.94	4.1	0.59	5.1	0.44		

[A]Branch pipe of any profile with specified thickness as required by A 796/A 796M.

TABLE 32 Requirements for Longitudinal Reinforcement of Fittings in 2100 mm Diameter Main Pipe with 19 by 19 by 190 mm Ribs[A]

Equivalent Fill Depth for Which No Longitudinal Reinforcement is Required, H_{nlr}, and Incremental Longitudinal Reinforcement Area, A_{li}										
	1.63 mm Thick Main Pipe		2.01 mm Thick Main Pipe		2.77 mm Thick Main Pipe		3.51 mm Thick Main Pipe		4.27 mm Thick Main Pipe	
Branch Dia., mm	H_{nlr}, m	A_{li}, mm^2/m	H_{nlr}, m	A_{li}, mm^2/m	H_{nlr}, m	A_{li}, mm^2/m	H_{nlr}, m	A_{li}, mm^2/m	H_{nlr}, m	A_{li}, mm^2/m
600			6.4	191						
750			4.3	275						
900			3.2	381						
1050			2.5	529	3.5	339				
1200			2.0	635	2.9	445				
1350			1.7	804	2.5	529				
1500			1.5	953	2.2	656				
1650			1.4	1186	2.0	762				
1800			1.2	1397	1.7	910	2.1	699		
1950			1.1	1672	1.5	1080	1.8	804		
2100			0.9	1990	1.2	1249	1.6	931		

[A]Branch pipe of any profile with specified thickness as required by A 796/A 796M.

TABLE 33 Requirements for Longitudinal Reinforcement of Fittings in 96 in. Diameter Main Pipe with ¾ by ¾ by 7-½ in. Ribs[A]

Equivalent Fill Depth for Which No Longitudinal Reinforcement is Required, H_{nlr}, and Incremental Longitudinal Reinforcement Area, A_{li}										
	0.064 in. Thick Main Pipe		0.079 in. Thick Main Pipe		0.109 in. Thick Main Pipe		0.138 in. Thick Main Pipe		0.168 in. Thick Main Pipe	
Branch Dia., in.	H_{nlr}, ft	A_{li}, in.^{2}/ft	H_{nlr}, ft	A_{li}, in.^{2}/ft	H_{nlr}, ft	A_{li}, in.^{2}/ft	H_{nlr}, ft	A_{li}, in.^{2}/ft	H_{nlr}, ft	A_{li}, in.^{2}/ft
42					10.0	0.19				
48					8.3	0.23				
54					7.2	0.29				
60					6.3	0.34				
66					5.7	0.41				
72					4.9	0.48	6.0	0.37		
78					4.2	0.56	5.1	0.43		
84					3.6	0.66	4.4	0.49		
90					3.1	0.76	3.9	0.56		
96					2.8	0.87	3.4	0.64		

[A]Branch pipe of any profile with specified thickness as required by A 796/A 796M.

TABLE 34 Requirements for Longitudinal Reinforcement of Fittings in 2400 mm Diameter Main Pipe with 19 by 19 by 190 mm Ribs[A]

Equivalent Fill Depth for Which No Longitudinal Reinforcement is Required, H_{nlr}, and Incremental Longitudinal Reinforcement Area, A_{li}										
	1.63 mm Thick Main Pipe		2.01 mm Thick Main Pipe		2.77 mm Thick Main Pipe		3.51 mm Thick Main Pipe		4.27 mm Thick Main Pipe	
Branch Dia., mm	H_{nlr}, m	A_{li}, mm^2/m	H_{nlr}, m	A_{li}, mm^2/m	H_{nlr}, m	A_{li}, mm^2/m	H_{nlr}, m	A_{li}, mm^2/m	H_{nlr}, m	A_{li}, mm^2/m
1050					3.0	402				
1200					2.5	487				
1350					2.2	614				
1500					1.9	720				
1650					1.7	868				
1800					1.5	1016	1.8	783		
1950					1.3	1186	1.6	910		
2100					1.1	1397	1.3	1037		
2250					0.9	1609	1.2	1186		
2400					0.9	1842	1.0	1355		

[A]Branch pipe of any profile with specified thickness as required by A 796/A 796M.

Copyright ASTM International
Provided by IHS under license with ASTM
No reproduction or networking permitted without license from IHS
Not for Resale

TABLE 35 Requirements for Longitudinal Reinforcement of Fittings in 108 in. Diameter Main Pipe with ¾ by ¾ by 7-½ in. Ribs[A]

Equivalent Fill Depth for Which No Longitudinal Reinforcement is Required, H_{nlr}, and Incremental Longitudinal Reinforcement Area, A_{li}										
	0.064 in. Thick Main Pipe		0.079 in. Thick Main Pipe		0.109 in. Thick Main Pipe		0.138 in. Thick Main Pipe		0.168 in. Thick Main Pipe	
Branch Dia., in.	H_{nlr}, ft	A_{li}, in.^{2}/ft	H_{nlr}, ft	A_{li}, in.^{2}/ft	H_{nlr}, ft	A_{li}, in.^{2}/ft	H_{nlr}, ft	A_{li}, in.^{2}/ft	H_{nlr}, ft	A_{li}, in.^{2}/ft
42					9.7	0.20				
48					8.2	0.25				
54					7.2	0.31				
60					6.3	0.37				
66					5.2	0.45				
72					4.4	0.53	5.4	0.41		
78					3.7	0.62	4.6	0.47		
84					3.2	0.72	4.0	0.54		
90					2.8	0.83	3.5	0.62		
96					2.5	0.95	3.0	0.70		
102					2.2	1.08	2.7	0.79		
108					1.9	1.22	2.4	0.89		

[A]Branch pipe of any profile with specified thickness as required by A 796/A 796M.

TABLE 36 Requirements for Longitudinal Reinforcement of Fittings in 2700 mm Diameter Main Pipe with 19 by 19 by 190 mm Ribs[A]

Equivalent Fill Depth for Which No Longitudinal Reinforcement is Required, H_{nlr}, and Incremental Longitudinal Reinforcement Area, A_{li}										
	1.63 mm Thick Main Pipe		2.01 mm Thick Main Pipe		2.77 mm Thick Main Pipe		3.51 mm Thick Main Pipe		4.27 mm Thick Main Pipe	
Branch Dia., mm	H_{nlr}, m	A_{li}, mm^2/m	H_{nlr}, m	A_{li}, mm^2/m	H_{nlr}, m	A_{li}, mm^2/m	H_{nlr}, m	A_{li}, mm^2/m	H_{nlr}, m	A_{li}, mm^2/m
1050					3.0	423				
1200					2.5	529				
1350					2.2	656				
1500					1.9	783				
1650					1.6	953				
1800					1.3	1122	1.6	868		
1950					1.1	1313	1.4	995		
2100					1.0	1524	1.2	1143		
2250					0.9	1757	1.1	1313		
2400					0.8	2011	0.9	1482		
2550					0.7	2286	0.8	1672		
2700					0.6	2583	0.7	1884		

[A]Branch pipe of any profile with specified thickness as required by A 796/A 796M.

TABLE 37 Requirements for Longitudinal Reinforcement of Fittings in 48 in. Diameter Main Pipe with ¾ by 11-½ in. Ribs[A]

Equivalent Fill Depth for Which No Longitudinal Reinforcement is Required, H_{nlr}, and Incremental Longitudinal Reinforcement Area, A_{li}										
	0.064 in. Thick Main Pipe		0.079 in. Thick Main Pipe		0.109 in. Thick Main Pipe		0.138 in. Thick Main Pipe		0.168 in. Thick Main Pipe	
Branch Dia., in.	H_{nlr}, ft	A_{li}, in.^{2}/ft	H_{nlr}, ft	A_{li}, in.^{2}/ft	H_{nlr}, ft	A_{li}, in.^{2}/ft	H_{nlr}, ft	A_{li}, in.^{2}/ft	H_{nlr}, ft	A_{li}, in.^{2}/ft
24	29.7	0.10	36.6	0.07	49.7	0.06				
30	19.8	0.11	24.7	0.10	33.8	0.07				
36	14.4	0.19	18.2	0.15	25.2	0.10				
42	11.2	0.25	14.2	0.19	20.0	0.13				
48	9.1	0.34	11.7	0.26	16.6	0.17				

[A]Branch pipe of any profile with specified thickness as required by A 796/A 796M.

TABLE 38 Requirements for Longitudinal Reinforcement of Fittings in 1200 mm Diameter Main Pipe with 19 by 25 by 292 mm Ribs[A]

Equivalent Fill Depth for Which No Longitudinal Reinforcement is Required, H_{nlr}, and Incremental Longitudinal Reinforcement Area, A_{li}										
	1.63 mm Thick Main Pipe		2.01 mm Thick Main Pipe		2.77 mm Thick Main Pipe		3.51 mm Thick Main Pipe		4.27 mm Thick Main Pipe	
Branch Dia., mm	H_{nlr}, m	A_{li}, mm^2/m	H_{nlr}, m	A_{li}, mm^2/m	H_{nlr}, m	A_{li}, mm^2/m	H_{nlr}, m	A_{li}, mm^2/m	H_{nlr}, m	A_{li}, mm^2/m
600	9.1	212	11.2	148	15.1	127				
750	6.0	233	7.5	212	10.3	148				
900	4.4	402	5.5	318	7.7	212				
1050	3.4	529	4.3	402	6.1	275				
1200	2.8	720	3.6	550	5.1	360				

[A]Branch pipe of any profile with specified thickness as required by A 796/A 796M.

TABLE 39 Requirements for Longitudinal Reinforcement of Fittings in 60 in. Diameter Main Pipe with ¾ by 11-½ in. Ribs[A]

Equivalent Fill Depth for Which No Longitudinal Reinforcement is Required, H_{nlr}, and Incremental Longitudinal Reinforcement Area, A_{li}										
	0.064 in. Thick Main Pipe		0.079 in. Thick Main Pipe		0.109 in. Thick Main Pipe		0.138 in. Thick Main Pipe		0.168 in. Thick Main Pipe	
Branch Dia., in.	H_{nlr}, ft	A_{li}, in.^{2}/ft	H_{nlr}, ft	A_{li}, in.^{2}/ft	H_{nlr}, ft	A_{li}, in.^{2}/ft	H_{nlr}, ft	A_{li}, in.^{2}/ft	H_{nlr}, ft	A_{li}, in.^{2}/ft
24	23.7	0.11	29.3	0.08	39.8	0.06				
30	15.8	0.17	19.7	0.14	27.1	0.08				
36	11.5	0.23	14.5	0.17	20.2	0.13				
42	9.0	0.30	11.4	0.24	16.0	0.15				
48	7.3	0.40	9.4	0.31	13.3	0.20				
54	6.1	0.51	8.0	0.37	11.5	0.24				
60	5.3	0.63	7.0	0.48	10.1	0.29				

[A]Branch pipe of any profile with specified thickness as required by A 796/A 796M.

Copyright ASTM International
Provided by IHS under license with ASTM
No reproduction or networking permitted without license from IHS
Not for Resale

TABLE 40 Requirements for Longitudinal Reinforcement of Fittings in 1500 mm Diameter Main Pipe with 19 by 25 by 292 mm Ribs[A]

Equivalent Fill Depth for Which No Longitudinal Reinforcement is Required, H_{nlr}, and Incremental Longitudinal Reinforcement Area, A_{li}										
	1.63 mm Thick Main Pipe		2.01 mm Thick Main Pipe		2.77 mm Thick Main Pipe		3.51 mm Thick Main Pipe		4.27 mm Thick Main Pipe	
Branch Dia., mm	H_{nlr}, m	A_{li}, mm²/m	H_{nlr}, m	A_{li}, mm²/m	H_{nlr}, m	A_{li}, mm²/m	H_{nlr}, m	A_{li}, mm²/m	H_{nlr}, m	A_{li}, mm²/m
600	7.2	233	8.9	169	12.1	127	0.0	0	0.0	0
750	4.8	360	6.0	296	8.3	169	0.0	0	0.0	0
900	3.5	487	4.4	360	6.2	275	0.0	0	0.0	0
1050	2.7	635	3.5	508	4.9	318	0.0	0	0.0	0
1200	2.2	847	2.9	656	4.1	423	0.0	0	0.0	0
1350	1.9	1080	2.4	783	3.5	508	0.0	0	0.0	0
1500	1.6	1334	2.1	1016	3.1	614	0.0	0	0.0	0

[A]Branch pipe of any profile with specified thickness as required by A 796/A 796M.

TABLE 41 Requirements for Longitudinal Reinforcement of Fittings in 72 in. Diameter Main Pipe with ¾ by 1 by 11-½ in. Ribs[A]

Equivalent Fill Depth for Which No Longitudinal Reinforcement is Required, H_{nlr}, and Incremental Longitudinal Reinforcement Area, A_{li}										
	0.064 in. Thick Main Pipe		0.079 in. Thick Main Pipe		0.109 in. Thick Main Pipe		0.138 in. Thick Main Pipe		0.168 in. Thick Main Pipe	
Branch Dia., in.	H_{nlr}, ft	A_{li}, in.²/ft	H_{nlr}, ft	A_{li}, in.²/ft	H_{nlr}, ft	A_{li}, in.²/ft	H_{nlr}, ft	A_{li}, in.²/ft	H_{nlr}, ft	A_{li}, in.²/ft
24	20.3	0.13	25.1	0.10	34.4	0.07				
30	13.7	0.19	17.2	0.15	23.8	0.10				
36	10.1	0.27	12.8	0.20	18.1	0.14				
42	8.0	0.34	10.2	0.27	14.6	0.18				
48	6.6	0.46	8.5	0.34	12.4	0.22				
54	5.6	0.57	7.4	0.42	10.8	0.28				
60	4.9	0.72	6.5	0.53	9.4	0.35				
66	4.4	0.87	5.9	0.65	7.8	0.41				
72	4.0	1.08	4.9	0.78	6.6	0.49				

[A]Branch pipe of any profile with specified thickness as required by A 796/A 796M.

TABLE 42 Requirements for Longitudinal Reinforcement of Fittings in 1800 mm Diameter Main Pipe with 19 by 25 by 292 mm Ribs[A]

Equivalent Fill Depth for Which No Longitudinal Reinforcement is Required, H_{nlr}, and Incremental Longitudinal Reinforcement Area, A_{li}										
	1.63 mm Thick Main Pipe		2.01 mm Thick Main Pipe		2.77 mm Thick Main Pipe		3.51 mm Thick Main Pipe		4.27 mm Thick Main Pipe	
Branch Dia., mm	H_{nlr}, m	A_{li}, mm²/m	H_{nlr}, m	A_{li}, mm²/m	H_{nlr}, m	A_{li}, mm²/m	H_{nlr}, m	A_{li}, mm²/m	H_{nlr}, m	A_{li}, mm²/m
600	6.2	275	7.7	212	10.5	148				
750	4.2	402	5.2	318	7.3	212				
900	3.1	572	3.9	423	5.5	296				
1050	2.4	720	3.1	572	4.5	381				
1200	2.0	974	2.6	720	3.8	466				
1350	1.7	1207	2.3	889	3.3	593				
1500	1.5	1524	2.0	1122	2.9	741				
1650	1.3	1842	1.8	1376	2.4	868				
1800	1.2	2286	1.5	1651	2.0	1037				

[A]Branch pipe of any profile with specified thickness as required by A 796/A 796M.

TABLE 43 Requirements for Longitudinal Reinforcement of Fittings in 84 in. Diameter Main Pipe with ¾ by 1 by 11-½ in. Ribs[A]

Equivalent Fill Depth for Which No Longitudinal Reinforcement is Required, H_{nlr}, and Incremental Longitudinal Reinforcement Area, A_{li}										
	0.064 in. Thick Main Pipe		0.079 in. Thick Main Pipe		0.109 in. Thick Main Pipe		0.138 in. Thick Main Pipe		0.168 in. Thick Main Pipe	
Branch Dia., in.	H_{nlr}, ft	A_{li}, in.²/ft	H_{nlr}, ft	A_{li}, in.²/ft	H_{nlr}, ft	A_{li}, in.²/ft	H_{nlr}, ft	A_{li}, in.²/ft	H_{nlr}, ft	A_{li}, in.²/ft
24			21.5	0.12	29.5	0.08	37.9	0.06		
30			14.7	0.17	20.4	0.13	26.8	0.10		
36			11.0	0.24	15.5	0.17	20.7	0.13		
42			8.8	0.31	12.5	0.21	17.0	0.17		
48			7.3	0.39	10.6	0.27	14.6	0.21		
54			6.3	0.29	9.3	0.32	12.3	0.26		
60			5.6	0.60	8.1	0.39	10.0	0.31		
66			5.0	0.73	6.6	0.46	8.2	0.36		
72			4.2	0.87	5.6	0.55	6.9	0.43		
78			3.6	1.04	4.8	0.64	5.9	0.49		
84			3.1	1.22	4.1	0.76	5.1	0.57		

[A]Branch pipe of any profile with specified thickness as required by A 796/A 796M.

TABLE 44 Requirements for Longitudinal Reinforcement of Fittings in 2100 mm Diameter Main Pipe with 19 by 25 by 292 mm Ribs[A]

Equivalent Fill Depth for Which No Longitudinal Reinforcement is Required, H_{nlr}, and Incremental Longitudinal Reinforcement Area, A_{li}										
	1.63 mm Thick Main Pipe		2.01 mm Thick Main Pipe		2.77 mm Thick Main Pipe		3.51 mm Thick Main Pipe		4.27 mm Thick Main Pipe	
Branch Dia., mm	H_{nlr}, m	A_{li}, mm²/m	H_{nlr}, m	A_{li}, mm²/m	H_{nlr}, m	A_{li}, mm²/m	H_{nlr}, m	A_{li}, mm²/m	H_{nlr}, m	A_{li}, mm²/m
600			6.6	254	9.0	169				
750			4.5	360	6.2	275				
900			3.4	508	4.7	360				
1050			2.7	656	3.8	445				
1200			2.2	826	3.2	572				
1350			1.9	614	2.8	677				
1500			1.7	1270	2.5	826				
1650			1.5	1545	2.0	974				
1800			1.3	1842	1.7	1164				
1950			1.1	2202	1.5	1355				
2100			0.9	2583	1.2	1609				

[A]Branch pipe of any profile with specified thickness as required by A 796/A 796M.

Copyright ASTM International
Provided by IHS under license with ASTM
No reproduction or networking permitted without license from IHS
Not for Resale

TABLE 45 Requirements for Longitudinal Reinforcement of Fittings in 96 in. Diameter Main Pipe with ¾ by 1 by 11-½ in. Ribs[A]

Equivalent Fill Depth for Which No Longitudinal Reinforcement is Required, H_{nlr}, and Incremental Longitudinal Reinforcement Area, A_{li}										
	0.064 in. Thick Main Pipe		0.079 in. Thick Main Pipe		0.109 in. Thick Main Pipe		0.138 in. Thick Main Pipe		0.168 in. Thick Main Pipe	
Branch Dia., in.	H_{nlr}, ft	A_{li}, in.^{2}/ft	H_{nlr}, ft	A_{li}, in.^{2}/ft	H_{nlr}, ft	A_{li}, in.^{2}/ft	H_{nlr}, ft	A_{li}, in.^{2}/ft	H_{nlr}, ft	A_{li}, in.^{2}/ft
24					25.8	0.08	33.2	0.08		
30					17.9	0.14	23.4	0.12		
36					13.6	0.18	18.1	0.14		
42					11.0	0.24	14.9	0.20		
48					9.3	0.29	12.8	0.25		
54					8.1	0.36	10.7	0.29		
60					7.1	0.43	8.7	0.35		
66					5.8	0.52	7.2	0.40		
72					4.9	0.62	6.0	0.48		
78					4.2	0.71	5.1	0.56		
84					3.6	0.84	4.4	0.64		
90					3.1	0.97	3.9	0.73		
96					2.8	1.11	3.4	0.83		

[A]Branch pipe of any profile with specified thickness as required by A 796/A 796M.

TABLE 46 Requirements for Longitudinal Reinforcement of Fittings in 2400 mm Diameter Main Pipe with 19 by 25 by 292 mm Ribs[A]

Equivalent Fill Depth for Which No Longitudinal Reinforcement is Required, H_{nlr}, and Incremental Longitudinal Reinforcement Area, A_{li}										
	1.63 mm Thick Main Pipe		2.01 mm Thick Main Pipe		2.77 mm Thick Main Pipe		3.51 mm Thick Main Pipe		4.27 mm Thick Main Pipe	
Branch Dia., mm	H_{nlr}, m	A_{li}, mm^2/m	H_{nlr}, m	A_{li}, mm^2/m	H_{nlr}, m	A_{li}, mm^2/m	H_{nlr}, m	A_{li}, mm^2/m	H_{nlr}, m	A_{li}, mm^2/m
600					7.9	169	10.1	262		
750					5.5	296	7.1	254		
900					4.1	381	5.5	296		
1050					3.4	508	4.5	423		
1200					2.8	614	3.9	529		
1350					2.5	762	3.3	614		
1500					2.2	910	2.7	741		
1650					1.8	1101	2.2	847		
1800					1.5	1313	1.8	1016		
1950					1.3	1503	1.6	1185		
2100					1.1	1778	1.3	1355		
2250					0.9	2053	1.2	1545		
2400					0.9	2350	1.0	1757		

[A]Branch pipe of any profile with specified thickness as required by A 796/A 796M.

TABLE 47 Requirements for Longitudinal Reinforcement of Fittings in 108 in. Diameter Main Pipe with ¾ by 1 by 11-½ in. Ribs[A]

Equivalent Fill Depth for Which No Longitudinal Reinforcement is Required, H_{nlr}, and Incremental Longitudinal Reinforcement Area, A_{li}										
	0.064 in. Thick Main Pipe		0.079 in. Thick Main Pipe		0.109 in. Thick Main Pipe		0.138 in. Thick Main Pipe		0.168 in. Thick Main Pipe	
Branch Dia., in.	H_{nlr}, ft	A_{li}, in.^{2}/ft	H_{nlr}, ft	A_{li}, in.^{2}/ft	H_{nlr}, ft	A_{li}, in.^{2}/ft	H_{nlr}, ft	A_{li}, in.^{2}/ft	H_{nlr}, ft	A_{li}, in.^{2}/ft
24					22.1	0.10	28.2	0.08		
30					15.0	0.14	19.5	0.12		
36					11.2	0.20	14.7	0.17		
42					8.9	0.25	11.9	0.21		
48					7.4	0.32	10.0	0.26		
54					6.4	0.41	8.8	0.32		
60					5.6	0.48	7.8	0.39		
66					5.1	0.57	6.4	0.46		
72					4.4	0.67	5.4	0.53		
78					3.7	0.78	4.6	0.61		
84					3.2	0.91	4.0	0.70		
90					2.8	1.05	3.5	0.81		
96					2.5	1.20	3.0	0.91		
102					2.2	1.37	2.7	1.03		
108					1.9	1.55	2.4	1.16		

[A]Branch pipe of any profile with specified thickness as required by A 796/A 796M.

Copyright ASTM International
Provided by IHS under license with ASTM
No reproduction or networking permitted without license from IHS
Not for Resale

TABLE 48 Requirements for Longitudinal Reinforcement of Fittings in 2700 mm Diameter Main Pipe with 19 by 25 by 292 mm Ribs[A]

Equivalent Fill Depth for Which No Longitudinal Reinforcement is Required, H_{nlr}, and Incremental Longitudinal Reinforcement Area, A_{li}										
	1.63 mm Thick Main Pipe		2.01 mm Thick Main Pipe		2.77 mm Thick Main Pipe		3.51 mm Thick Main Pipe		4.27 mm Thick Main Pipe	
Branch Dia., mm	H_{nlr}, m	A_{li}, mm²/m	H_{nlr}, m	A_{li}, mm²/m	H_{nlr}, m	A_{li}, mm²/m	H_{nlr}, m	A_{li}, mm²/m	H_{nlr}, m	A_{li}, mm²/m
600					6.7	212	8.6	262		
750					4.6	296	5.9	254		
900					3.4	423	4.5	360		
1050					2.7	529	3.6	444		
1200					2.3	677	3.0	550		
1350					2.0	868	2.7	677		
1500					1.7	1016	2.4	825		
1650					1.6	1207	2.0	974		
1800					1.3	1418	1.6	1122		
1950					1.1	1651	1.4	1291		
2100					1.0	1926	1.2	1482		
2250					0.9	2223	1.1	1714		
2400					0.8	2540	0.9	1926		
2550					0.7	2900	0.8	2180		
2700					0.6	3281	0.7	2455		

[A]Branch pipe of any profile with specified thickness as required by A 796/A 796M.

TABLE 49 Requirements for Circumferential Reinforcement of Fittings in Main Pipe with 2-⅔ by ½ in., 3 by 1 in., or 5 by 1 in. Corrugations[A]

Maximum Branch Diameter for Which No Circumferential Reinforcement is Required, d_m (in.)															
	0.064 in. Thick Main Pipe			0.079 in. Thick Main Pipe			0.109 in. Thick Main Pipe			0.138 in. Thick Main Pipe			0.168 in. Thick Main Pipe		
Main Pipe Dia., in	*He* = 10 ft	*He* = 20 ft	*He* = 30 ft	*He* = 10 ft	*He* = 20 ft	*He* = 30 ft	*He* = 10 ft	*He* = 20 ft	*He* = 30 ft	*He* = 10 ft	*He* = 20 ft	*He* = 30 ft	*He* = 10 ft	*He* = 20 ft	*He* = 30 ft
48	48	30	18	48	48	30	48	48	48	48	48	48	48	48	48
54	48	30	18	54	42	30	54	54	48	54	54	54	54	54	54
60	48	30	18	60	42	24	60	60	48	60	60	60	60	60	60
66	48	30	18	66	42	24	66	60	42	66	66	60	66	66	66
72	48	24	18	66	42	18	72	60	42	72	72	60	72	72	72
78	48	24	18	66	36	18	78	60	42	78	78	60	78	78	72
84	48	18	18	60	36	18	84	60	36	84	78	60	84	84	72
90	48	18	18	60	30	18	90	60	36	90	78	54	90	90	66
96	48	18	18	60	30	18	90	54	30	96	78	54	96	96	66
102	48	18	18	60	24	18	90	54	30	102	78	54	102	96	66
108	42	18	18	60	24	18	90	54	24	108	78	48	108	96	66
114	42	18	18	60	24	18	90	48	24	114	78	48	114	96	66
120	42	18	18	60	18	18	90	48	18	114	72	42	120	96	66
126				60	18	18	90	48	18	114	72	42	126	96	66
132				60	18	18	90	42	18	114	72	36	132	96	60
138				54	18	18	90	42	18	114	66	30	138	96	60
144							90	36	18	114	66	30	144	90	54

[A]Branch pipe of any profile with specified thickness as required by A 796/A 796M.

Copyright ASTM International
Provided by IHS under license with ASTM
No reproduction or networking permitted without license from IHS
Not for Resale

TABLE 50 Requirements for Circumferential Reinforcement of Fittings in Main Pipe with 68 by 13 mm, 75 by 25 mm, or 125 by 25 mm Corrugations[A]

Maximum Branch Diameter for Which No Circumferential Reinforcement is Required, d_m (mm)															
	1.63 mm Thick Main Pipe			2.01 mm Thick Main Pipe			2.77 mm Thick Main Pipe			3.51 mm Thick Main Pipe			4.27 mm Thick Main Pipe		
Main Pipe Dia., mm	*He* = 3 m	*He* = 6 m	*He* = 9 m	*He* = 3 m	*He* = 6 m	*He* = 9 m	*He* = 3 m	*He* = 6 m	*He* = 9 m	*He* = 3 m	*He* = 6 m	*He* = 9 m	*He* = 3 m	*He* = 6 m	*He* = 9 m
1200	1200	750	450	1200	1200	750	1200	1200	1200	1200	1200	1200	1200	1200	1200
1350	1200	750	450	1350	1050	750	1350	1350	1200	1350	1350	1350	1350	1350	1350
1500	1200	750	450	1500	1050	600	1500	1500	1200	1500	1500	1500	1500	1500	1500
1650	1200	750	450	1650	1050	600	1650	1500	1050	1650	1650	1500	1650	1650	1650
1800	1200	600	450	1650	1050	450	1800	1500	1050	1800	1800	1500	1800	1800	1800
1950	1200	600	450	1650	900	450	1950	1500	1050	1950	1950	1500	1950	1950	1800
2100	1200	450	450	1500	900	450	2100	1500	900	2100	1950	1500	2100	2100	1800
2250	1200	450	450	1500	750	450	2250	1500	900	2250	1950	1350	2250	2250	1650
2400	1200	450	450	1500	750	450	2250	1350	750	2400	1950	1350	2400	2400	1650
2550	1200	450	450	1500	600	450	2250	1350	750	2550	1950	1350	2550	2400	1650
2700	1050	450	450	1500	600	450	2250	1350	600	2700	1950	1200	2700	2400	1650
2850	1050	450	450	1500	600	450	2250	1200	600	2850	1950	1200	2850	2400	1650
3000	1050	450	450	1500	450	450	2250	1200	450	2850	1800	1050	3000	2400	1650
3150				1500	450	450	2250	1200	450	2850	1800	1050	3150	2400	1650
3300				1500	450	450	2250	1050	450	2850	1800	900	3300	2400	1500
3450				1350	450	450	2250	1050	450	2850	1650	750	3450	2400	1500
3600							2250	900	450	2850	1650	750	3600	2250	1350

[A]Branch pipe of any profile with specified thickness as required by A 796/A 796M.

TABLE 51 Requirements for Circumferential Reinforcement of Fittings in Main Pipe with ¾ by ¾ by 7-½ in. Ribs[A]

Maximum Branch Diameter for Which No Circumferential Reinforcement is Required, d_m (in.)															
	0.064 in. Thick Main Pipe			0.079 in. Thick Main Pipe			0.109 in. Thick Main Pipe			0.138 in. Thick Main Pipe			0.168 in. Thick Main Pipe		
Main Pipe Dia., in	*He* = 10 ft	*He* = 20 ft	*He* = 30 ft	*He* = 10 ft	*He* = 20 ft	*He* = 30 ft	*He* = 10 ft	*He* = 20 ft	*He* = 30 ft	*He* = 10 ft	*He* = 20 ft	*He* = 30 ft	*He* = 10 ft	*He* = 20 ft	*He* = 30 ft
48	30	18	12	42	30	18	48	48	42						
54	30	18	12	42	24	18	54	54	36						
60	30	18	12	42	24	18	60	54	36						
66				42	24	18	66	54	36						
72				42	18	18	72	48	30						
78				42	18	18	78	48	30	78	78	60			
84							78	48	24	84	78	60			
90							78	48	24	90	78	54			
96							78	42	18	96	78	54			
102							78	42	18	102	78	54			
108										108	78	48			

[A]Branch pipe of any profile with specified thickness as required by A 796/A 796M.

Copyright ASTM International
Provided by IHS under license with ASTM
No reproduction or networking permitted without license from IHS
Not for Resale

TABLE 52 Requirements for Circumferential Reinforcement of Fittings in Main Pipe with 19 by 19 by 190 mm Ribs[A]

	Maximum Branch Diameter for Which No Circumferential Reinforcement is Required, d_m (mm)														
	1.63 mm Thick Main Pipe			2.01 mm Thick Main Pipe			2.77 mm Thick Main Pipe			3.51 mm Thick Main Pipe			4.27 mm Thick Main Pipe		
Main Pipe Dia., mm	*He* = 3 m	*He* = 6 m	*He* = 9 m	*He* = 3 m	*He* = 6 m	*He* = 9 m	*He* = 3 m	*He* = 6 m	*He* = 9 m	*He* = 3 m	*He* = 6 m	*He* = 9 m	*He* = 3 m	*He* = 6 m	*He* = 9 m
1200	750	450	300	1050	750	450	1200	1200	1050						
1350	750	450	300	1050	600	450	1350	1350	900						
1500	750	450	300	1050	600	450	1500	1350	900						
1650				1050	600	450	1650	1350	900						
1800				1050	450	450	1800	1200	750						
1950				1050	450	450	1950	1200	750	1950	1950	1500			
2100							1950	1200	600	2100	1950	1500			
2250							1950	1200	600	2250	1950	1350			
2400							1950	1050	450	2400	1950	1350			
2550							1950	1050	450	2550	1950	1350			
2700										2700	1950	1200			

[A]Branch pipe of any profile with specified thickness as required by A 796/A 796M.

TABLE 53 Requirements for Circumferential Reinforcement of Fittings in Main Pipe with ¾ by 1 by 11-½ in. Ribs[A]

	Maximum Branch Diameter for Which No Circumferential Reinforcement is Required, d_m (in.)														
	0.064 in. Thick Main Pipe			0.079 in. Thick Main Pipe			0.109 in. Thick Main Pipe			0.138 in. Thick Main Pipe			0.168 in. Thick Main Pipe		
Main Pipe Dia., in	*He* = 10 ft	*He* = 20 ft	*He* = 30 ft	*He* = 10 ft	*He* = 20 ft	*He* = 30 ft	*He* = 10 ft	*He* = 20 ft	*He* = 30 ft	*He* = 10 ft	*He* = 20 ft	*He* = 30 ft	*He* = 10 ft	*He* = 20 ft	*He* = 30 ft
48	18	12	12	30	18	18	48	36	24						
54	18	12	12	30	18	18	54	36	24						
60	18	12	12	30	18	12	54	36	18						
66	18	12		30	18	12	54	36	18						
72				30	18	12	54	30	18						
78				30	18	12	54	30	18						
84				24	18		54	24	18						
90							54	24	12						
96							54	24	12						
102							54	18	12						
108							54	18	12						

[A]Branch pipe of any profile with specified thickness as required by A 796/A 796M.

TABLE 54 Requirements for Circumferential Reinforcement of Fittings in Main Pipe with 19 by 25 by 292 mm Ribs[A]

	Maximum Branch Diameter for Which No Circumferential Reinforcement is Required, d_m (mm)														
	1.63 mm Thick Main Pipe			2.01 mm Thick Main Pipe			2.77 mm Thick Main Pipe			3.51 mm Thick Main Pipe			4.27 mm Thick Main Pipe		
Main Pipe Dia., mm	*He* = 3 m	*He* = 6 m	*He* = 9 m	*He* = 3 m	*He* = 6 m	*He* = 9 m	*He* = 3 m	*He* = 6 m	*He* = 9 m	*He* = 3 m	*He* = 6 m	*He* = 9 m	*He* = 3 m	*He* = 6 m	*He* = 9 m
1200	450	300	300	750	450	450	1200	900	600						
1350	450	300	300	750	450	450	1350	900	600						
1500	450	300	300	750	450	300	1350	900	450						
1650	450			750	450	300	1350	900	450						
1800				750	450	300	1350	750	450						
1950				750	450	300	1350	750	450						
2100				600	450		1350	600	450						
2250							1350	600	300						
2400							1350	600	300						
2550							1350	450	300						
2700							1350	450	300						

[A]Branch pipe of any profile with specified thickness as required by A 796/A 796M.

Copyright ASTM International
Provided by IHS under license with ASTM
No reproduction or networking permitted without license from IHS
Not for Resale

TABLE 55 Required Saddle Plate Thickness (in.)[A]

Increased Main Pipe Thickness (in.) to Avoid Both Longitudinal and Circumferential Reinforcement Per 6.2 and 6.3	Original Main Pipe Thickness (in.) Per A 796			
	0.064	0.079	0.109	0.138
	Required Saddle Plate Thickness (in.)			
0.079	0.064	-	-	-
0.109	0.079	0.064	-	-
0.138	0.138	0.109	0.079	-
0.168	0.168	0.138	0.138	0.079

[A]Branch pipe of any profile with specified thickness as required by A 796/A 796M.

TABLE 56 Required Saddle Plate Thickness (mm)[A]

Increased Main Pipe Thickness (mm.) to Avoid Both Longitudinal and Circumferential Reinforcement Per 6.2 and 6.3	Original Main Pipe Thickness (mm) Per A 796			
	1.63	2.01	2.77	3.51
	Required Saddle Plate Thickness (mm)			
2.01	1.63	-	-	-
2.77	2.01	1.63	-	-
3.51	3.51	2.77	2.01	-
4.27	4.27	3.51	3.51	2.01

[A]Branch pipe of any profile with specified thickness as required by A 796/A 796M.

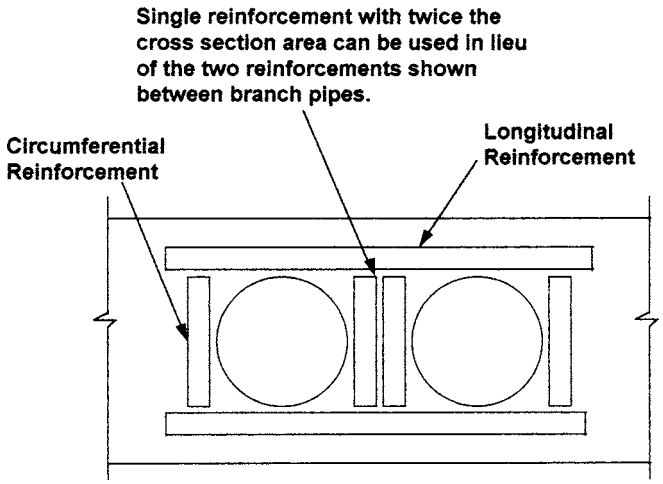

FIG. 4 Schematic of Multiple Reinforcements

12. Allowable Loads and Locations for Fasteners

12.1 *Welds*:

12.1.1 Welds shall be fillet welds with a leg size equal to the thickness of the pipe or the reinforcement, whichever is less. Any gap between the reinforcement and the pipe within the design length of the weld shall be built up with weld metal and shall not be included in the leg size.

12.1.2 The allowable load per weld (q) shall be calculated as follows:

$$q = (18\,000t_x - 67)L_w \quad [q — (0.124t_x - 0.12)L_w] \tag{9}$$

where:

t_x is the bare steel thickness of the pipe or the reinforcement, whichever is less, and

L_w is the length of the weld. For structural members, the thickness of the reinforcement is the thickness of the part of the cross section in contact with the pipe. For pipe and for reinforcement made from pipe stock, t_x shall be taken as the specified minimum thickness less 0.004 in. [0.10 mm].

12.1.3 Welds to corrugated pipe shall be located on corrugation crests. Welds to ribbed pipe shall be located in the flat portion of the cross section, approximately 1 in. [25 mm] from the ribs, for inside reinforcement, or on top of the ribs, for

Copyright ASTM International
Provided by IHS under license with ASTM
No reproduction or networking permitted without license from IHS
Not for Resale

outside reinforcement. Welds shall be placed along the edges of the reinforcement or in slots cut in the reinforcement.

12.2 *Bolts*:

12.2.1 Bolts shall conform to the requirements of Specification A 307, or Specification F 568M, Class 4.6.

12.2.2 The allowable load per bolt (q) shall be taken as the least of the following equations:

$$q = 54{,}000 t_x d_b \quad [q = 0.372 t_x d_b] \tag{10}$$

$$q = 7850 (d_b)^2 \quad [q = 0.0541 (d_b)^2] \tag{11}$$

where: d_b is the nominal bolt diameter.

12.2.3 Bolts shall be located on corrugation crests. Bolts to corrugated pipe shall be located on corrugation crests. Bolts to ribbed pipe shall be located in the flat portion of the cross section, approximately 1 in. [25 mm] from the ribs, for inside reinforcement, or on top of the ribs, for outside reinforcement. If more than one row of bolts is required, the bolts shall be placed in rows spaced at least $3d_b$ apart. The center of the first and last bolts in each row shall be at least $1.5d_b$ from the end of the reinforcement. The minimum distance from the center of bolts to the longitudinal edges of the reinforcement shall be 4/3 times the bolt diameter for sheet material and 5/3 times the bolt diameter for structural members.

12.3 *Screws*:

12.3.1 Screws shall be self tapping and shall meet the minimum mechanical and quality requirements for tapping screws in accordance with SAE J978. Screw nominal diameters shall be ¼ in. [6.3 mm], No. 12, or No. 10.

12.3.2 The allowable load per screw (q) shall not exceed 1000 lbf [4.45 *kN*] for a ¼ in. diameter [6.3 mm] screw, 770 lbf [3.42 *kN*] for a No. 12 screw, or 547 lbf [2.43 kN] for a No. 10 screw. In addition, the allowable load per screw shall not exceed the least of Eq 12-14, as applicable, depending on the ratio of the bare steel thickness of the pipe to that of the reinforcement in contact with the pipe (t_{np}/t_{nr}).

When $t_{np}/t_{nr} \leq 1$

$$q = 85{,}500 \sqrt{t_{np}^3 d_s} \quad [q = 0.590 \sqrt{t_{np}^3 d_s}] \tag{12}$$

$$q = 54{,}000 t_{np} d_s \quad [q = 0.372 t_{np} d_s] \tag{13}$$

When $t_{np}/t_{nr} \geq 2.5$

$$q = 54{,}000 t_{nr} d_s \quad [q = 0.372 t_{nr} d_s \tag{14}$$

where d_s is the nominal screw diameter taken as follows: ¼ in. nominal dia. - 0.250 [6.3 mm]; No. 12 - 0.216 in. [5.49 mm], or No. 10 - 0.190 in. [4.83 mm]. For values of $1 < (t_{np}/t_{nr}) < 2.5$, interpolation shall be used.

12.3.3 Screws to corrugated pipe shall be located on corrugation crests. Screws to ribbed pipe shall be located in the flat portion of the cross section, approximately 1 in. [25 mm] from the ribs, for inside reinforcement, or on top of the ribs, for outside reinforcement. If more than one row of screws is required, the screws shall be placed in rows spaced at least 1 in. [25 mm] apart. The center of the first and last screws in each row shall be at least ¾ in. [19 mm] from the end of the reinforcement. The minimum distance from the center of screws to the longitudinal edges of the reinforcement shall be ½ in. [12 mm].

13. Keywords

13.1 buried applications; corrugated steel pipe; pipe fittings; reinforcement; steel pipe structural design

APPENDIX

(Nonmandatory Information)

X1. Background Information

X1.1 This practice is based mainly on the results of three dimensional finite element analyses[7] of main pipes with openings cut for branch pipes. The longitudinal reinforcements at the top and bottom of the branch pipe reduce the longitudinal tension stresses that concentrate in the main pipe at these locations. The circumferential reinforcements at the sides of the branch pipe reduce the circumferential ring compression stresses that concentrate in the main pipe. For the identified cases where the concentrations are not excessive, no reinforcement is required. The strength contribution of the branch pipe stub, fully welded to the main pipe, with an assumed thickness of 0.064 in. was considered.

[7] Brockenbrough, R.L., "Fittings Reinforcement in Corrugated Steel Pipe," paper presented at A2C06 Session on Latest Advances in Metal Culvert Design and Construction, Transportation Research Board, 1999 Annual Meeting, Washington, DC.

Copyright ASTM International
Provided by IHS under license with ASTM
No reproduction or networking permitted without license from IHS
Not for Resale

ASTM International takes no position respecting the validity of any patent rights asserted in connection with any item mentioned in this standard. Users of this standard are expressly advised that determination of the validity of any such patent rights, and the risk of infringement of such rights, are entirely their own responsibility.

This standard is subject to revision at any time by the responsible technical committee and must be reviewed every five years and if not revised, either reapproved or withdrawn. Your comments are invited either for revision of this standard or for additional standards and should be addressed to ASTM International Headquarters. Your comments will receive careful consideration at a meeting of the responsible technical committee, which you may attend. If you feel that your comments have not received a fair hearing you should make your views known to the ASTM Committee on Standards, at the address shown below.

This standard is copyrighted by ASTM International, 100 Barr Harbor Drive, PO Box C700, West Conshohocken, PA 19428-2959, United States. Individual reprints (single or multiple copies) of this standard may be obtained by contacting ASTM at the above address or at 610-832-9585 (phone), 610-832-9555 (fax), or service@astm.org (e-mail); or through the ASTM website (www.astm.org).

--`,,```,,,,````-`-`,,`,,`,`,,`---

Copyright ASTM International
Provided by IHS under license with ASTM
No reproduction or networking permitted without license from IHS

Not for Resale