Designation: A 981 – 97 (Reapproved 2007)

Standard Test Method for Evaluating Bond Strength for 15.2 mm (0.6 in.) Diameter Prestressing Steel Strand, Grade 270, Uncoated, Used in Prestressed Ground Anchors[1]

This standard is issued under the fixed designation A 981; the number immediately following the designation indicates the year of original adoption or, in the case of revision, the year of last revision. A number in parentheses indicates the year of last reapproval. A superscript epsilon (ε) indicates an editorial change since the last revision or reapproval.

1. Scope

1.1 This test method describes procedures to establish the relative bond strength of 15.2 mm (0.6 in.) diameter, Grade 270 prestressing steel strand in cement grout as used in prestressed ground anchors for the purpose of evaluating the effects of manufacturing practices on bond strength.

1.2 The bond strength values obtained shall not be used to design the bond length of ground anchors that depend on field conditions.

1.3 This test method is not intended to be used as a bond test for pretensioned concrete applications.

1.4 The values stated in SI units are to be regarded as the standard. The values given in parentheses are for information only.

1.5 *This standard does not purport to address all of the safety concerns, if any, associated with its use. It is the responsibility of the user of this standard to establish appropriate safety and health practices and determine the applicability of regulatory limitations prior to use.*

2. Referenced Documents

2.1 *ASTM Standards:* [2]

A 416/A 416M Specification for Steel Strand, Uncoated Seven-Wire for Prestressed Concrete

C 150 Specification for Portland Cement

C 511 Specification for Mixing Rooms, Moist Cabinets, Moist Rooms, and Water Storage Tanks Used in the Testing of Hydraulic Cements and Concretes

C 1019 Test Method for Sampling and Testing Grout

E 4 Practices for Force Verification of Testing Machines

3. Terminology

3.1 *Definitions of Terms Specific to This Standard:*

3.1.1 *bond strength*—maximum measured load in a pull test on a 15.2 mm (0.6 in.) diameter prestressing steel strand embedded in cement grout.

3.1.2 *bonded length*—the length of the test strand that is in contact with the cement grout.

4. Apparatus

4.1 *Equipment*—A suitable tensile test machine or load frame shall be used. The loading system shall be calibrated in accordance with Practices E 4. The test system shall have sufficient capacity to prevent yielding of its various components and shall ensure that the applied tensile load remains parallel to the axis of the prestressing steel strand during testing.

4.2 *Strand Displacement Measurements*—Displacements of the free end of the prestressing steel strand shall be measured with respect to the loaded surface of the test specimen using suitable measurement devices. Dial gages having the smallest division of not more than 25 μm (0.001 in.) or linear variable differential transformers (LVDTs) with equal or superior accuracy are examples of satisfactory devices.

5. Test Specimen

5.1 *Prestressing Steel Strand*—shall be 15.2 mm (0.6 in.) diameter, Grade 270 and comply with Specification A 416 and shall be cut from standard production coils. The surface of the test samples shall not be wiped or cleaned in order to preserve their original condition. Minimum recommended sample length is 750 mm (30 in.).

5.2 *Strand Bond Test Specimen*—The test specimen shall consist of the prestressing steel strand embedded in cement grout and centered inside a steel pipe, 125 mm (5 in.) O.D. with a 3 mm (0.125 in.) wall, 450 mm (18 in.) long with a 150 by 150 by 6 mm (6 by 6 by 0.25 in.) base plate welded, or otherwise leakproof connected to one end of the steel pipe. Other mold designs, including reusable molds, shall be permissible, provided that the dimensions and confinement in regard to circumferential stress provided for the grout body are the same. A hole in the base plate shall allow the strand to pass through. A 50 mm (2 in.) long debonding tube shall be positioned on the strand above the base plate and the strand

[1] This test method is under the jurisdiction of ASTM Committee A01 on Steel, Stainless Steel and Related Alloys and is the direct responsibility of Subcommittee A01.05 on Steel Reinforcement.

Current edition approvedSept. 1, 2007. Published September 2007. Originally approve din 1997. Last previous edition approved in 2002 as A 981 – 97 (2002).

[2] For referenced ASTM standards, visit the ASTM website, www.astm.org, or contact ASTM Customer Service at service@astm.org. For *Annual Book of ASTM Standards* volume information, refer to the standard's Document Summary page on the ASTM website.

Copyright © ASTM International, 100 Barr Harbor Drive, PO Box C700, West Conshohocken, PA 19428-2959, United States.

Copyright ASTM International
Provided by IHS under license with ASTM
No reproduction or networking permitted without license from IHS
Not for Resale

shall protrude at least 50 ± 10 mm (2 ± 0.5 in.) from the top of the grouted steel tube. A typical test specimen is illustrated in Fig.1.

5.3 *Test Specimen Preparation*—The untensioned strand specimen shall be installed and centered inside the steel pipe as shown in Fig. 1. A sealing agent shall be applied around the hole in the base plate to prevent leakage of grout from the sample during casting.

5.3.1 The grout shall be made solely from fresh portland cement conforming to Specification C 150, Type I with a water/cement ratio of 0.45. Water shall be potable. The cement shall be added to the water. Mixing of the grout shall continue until the grout is free of lumps and undispersed cement. The grout then shall be poured into the steel tube to completely fill it.

5.4 *Test Specimen Conditioning*—The test specimen including the grout test cubes, shall be cured according to Specification C 511 at a 23 ± 1.7°C (74 ± 3°F) temperature and minimum 95 percent relative humidity until the grout strength, as determined according to Test Method C 1019 on at least two 50 by 50 by 50 mm (2 by 2 by 2 in.) test cubes, has reached a compressive strength of 24 to 28 MPa (3500 to 4000 psi). The seal around the hole in the base plate may be removed once the grout has set.

5.5 The loss in height of the cured test cylinder because of grout bleed or drainage of water, or both, through the interstices of the seven-wire strand shall not be more that 13 mm (0.5 in.). Test cylinders with a height loss of more than 13 mm (0.5 in.) shall be discarded and new test cylinders prepared using a more thorough mixing of the grout or sealing the interstices of the seven-wire strand, or both, within the 50 mm (2 in.) wide tape bond breaker zone shown in Fig. 1. However, tests performed successfully on test cylinders shorter than the allowed minimum length, shall be deemed acceptable.

6. Pull Test

6.1 *Pull Test Setup*—With the test specimen supported with its base plate on the table of the test machine or load frame, the free strand protruding from the base plate shall be gripped by the jaws of the test machine or load frame with a minimum of 300 mm (12 in.) of free strand in between the base plate and the jaws.

6.1.1 A dial gage or other suitable measuring device shall be positioned to measure the longitudinal displacement at the unloaded end of the test specimen. A suitable test setup is shown in Fig. 2.

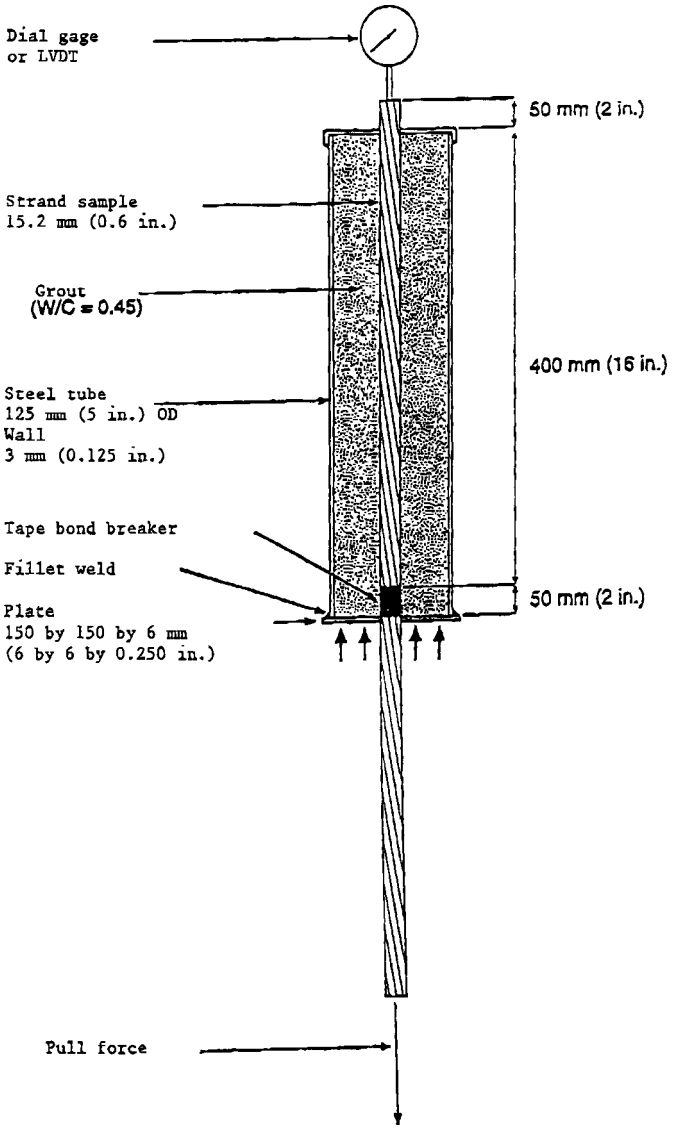

FIG. 1 Untensioned Strand Specimen

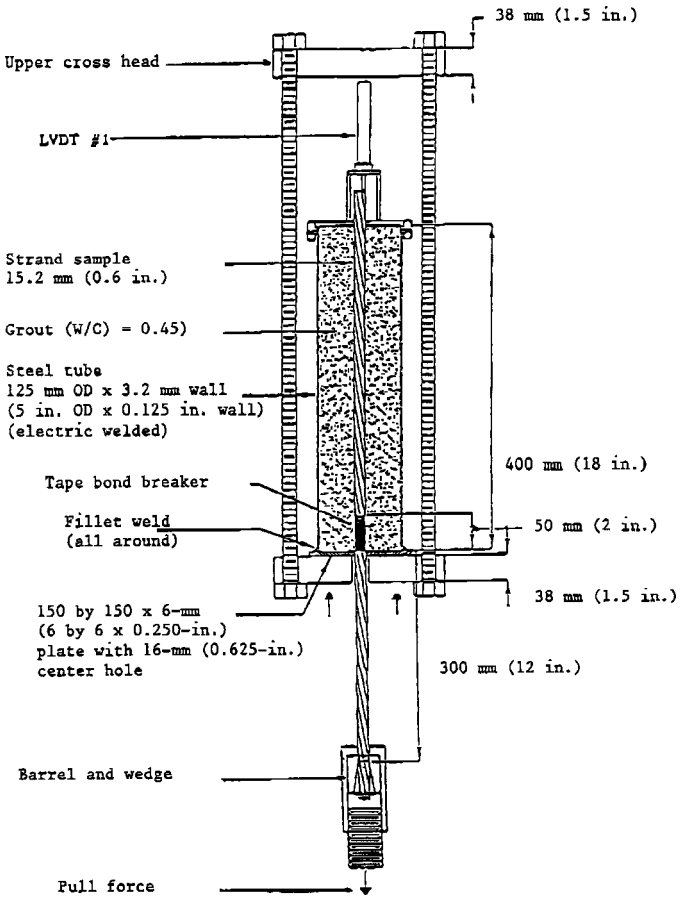

FIG. 2 Pull Test Setup

Copyright ASTM International
Provided by IHS under license with ASTM
No reproduction or networking permitted without license from IHS
Not for Resale

6.2 *Pull Test Procedure*—Testing shall not commence before the grout has reached a compressive strength of 24 MPa (3500 psi), but before reaching a 28 MPa (4000 psi) strength.

6.2.1 The pull force shall be applied to the test specimen at a rate of 2.5 mm (0.1 in.) per minute, with a tolerance of ± 25%, until the displacement at the unloaded end of the strand sample reaches 0.25 mm (0.01 in.) at which point the force shall be recorded.

NOTE 1—Although not required, it is advisable to use a continuous load/displacement recording device. The shape of the load/displacement curve may yield valuable insight on the bond behavior of the strand sample.

7. Report

7.1 Report the following information:

7.1.1 Date of test and report,

7.1.2 Identification of the prestressing steel strand:

7.1.2.1 Strand size and grade,

7.1.2.2 Manufacturer of strand,

7.1.2.3 Date of strand manufacture,

7.1.2.4 Coil or lot number,

7.1.3 Any presence of corrosion on the strand tested shall be reported.

7.1.4 Description of any deviations from the fabrication of the test specimen and testing procedures specified.

7.1.5 Description of the grout used, including mix design, compressive strength at a time of test (average of a minimum of two cubes), and

7.1.6 Individual load value (bond strength), in *N* (lb), for each test specimen at a displacement of 0.25 mm (0.01 in.).

8. Precision and Bias

8.1 No statement is made on the precision or bias of this test method since the test results indicate only whether there is conformance to given criteria and since no generally accepted method for determining precision and bias of this test method is currently available. General guidelines provided herein for the specimens, instrumentation and procedures make the results intractable to calculation of meaningful values by statistical analysis for precision and bias at this time.

9. Keywords

9.1 bond test; ground anchors; prestressing steel strand

ASTM International takes no position respecting the validity of any patent rights asserted in connection with any item mentioned in this standard. Users of this standard are expressly advised that determination of the validity of any such patent rights, and the risk of infringement of such rights, are entirely their own responsibility.

This standard is subject to revision at any time by the responsible technical committee and must be reviewed every five years and if not revised, either reapproved or withdrawn. Your comments are invited either for revision of this standard or for additional standards and should be addressed to ASTM International Headquarters. Your comments will receive careful consideration at a meeting of the responsible technical committee, which you may attend. If you feel that your comments have not received a fair hearing you should make your views known to the ASTM Committee on Standards, at the address shown below.

This standard is copyrighted by ASTM International, 100 Barr Harbor Drive, PO Box C700, West Conshohocken, PA 19428-2959, United States. Individual reprints (single or multiple copies) of this standard may be obtained by contacting ASTM at the above address or at 610-832-9585 (phone), 610-832-9555 (fax), or service@astm.org (e-mail); or through the ASTM website (www.astm.org).

Copyright ASTM International
Provided by IHS under license with ASTM
No reproduction or networking permitted without license from IHS
Not for Resale