Designation: A 976 – 03

Standard Classification of Insulating Coatings for Electrical Steels by Composition, Relative Insulating Ability and Application[1]

This standard is issued under the fixed designation A 976; the number immediately following the designation indicates the year of original adoption or, in the case of revision, the year of last revision. A number in parentheses indicates the year of last reapproval. A superscript epsilon (ε) indicates an editorial change since the last revision or reapproval.

1. Scope

1.1 This document classifies insulating coatings for electrical steels according to their composition, relative insulating ability, and functionality. The purpose of this classification is to assist users of insulating coatings by providing general information about the chemical nature and use of the coatings, as well as to provide important data concerning limits to their use, that is, relative insulating ability, punchability, temperature stability, weldability, and fabricability. Specific surface insulation resistivity values for each coating are not included in this classification. The user is referred to the flat-rolled electrical steel specifications noted in 1.2 should more detailed information concerning surface insulation resistivity values be required.

1.2 This classification is to be used in conjunction with the various specifications for flat-rolled electrical steels under the jurisdiction of Committee A06, including Specifications A 345, A 677, A 683, A 726, A 840, and A 876. However, in those instances in which the coating descriptions and characteristics differ between this classification and any of the specifications, this classification shall supersede the specification.

1.3 The values stated in customary (cgs-emu and inch-pound) units are to be regarded as standard. The values given in parentheses are mathematical conversions to SI units which are provided for information only and are not considered standard.

1.4 *This standard does not purport to address all of the safety concerns, if any, associated with its use. It is the responsibility of the user of this standard to establish appropriate safety and health practices and determine the applicability of regulatory limitations prior to use.*

2. Referenced Documents

2.1 *ASTM Standards:* [2]

A 345 Specification for Flat-Rolled Electrical Steels for Magnetic Applications

A 677 Specification for Nonoriented Electrical Steel Fully Processed Types

A 683 Specification for Nonoriented Electrical Steel, Semiprocessed Types

A 717/A 717M Test Method for Surface Insulation Resistivity of Single Strip Specimens

A 726 Specification for Cold Rolled Magnetic Lamination Quality Steel, Semiprocessed Types

A 840 Specification for Fully Processed Magnetic Lamination Steel

A 876 Specification for Flat Rolled, Grain Oriented, Silicon Iron, Electrical Steel, Fully Processed Types

A 937/A 937M Test Method for Determining Interlaminar Resistance of Insulating Coatings Using Two Adjacent Test Surfaces

3. Terminology

3.1 *Definitions of Terms Specific to This Standard:*

3.1.1 *interlaminar resistance, n*—the average resistance of two adjacent insulating surfaces in contact with each other, in accordance with Test Method A 937/A 937M.

3.1.2 *stress-relief anneal, n*—heat treatment that improves the magnetic properties of electrical steel by relieving internal stresses which are introduced during fabrication of magnetic cores.

3.1.3 *surface insulation resistivity, n*—the effective resistivity of a single insulating layer tested between applied bare metal contacts and the base metal of the insulated test specimen, in accordance with Test Method A 717/A 717M.

4. Significance and Use

4.1 This classification establishes categories of insulating coatings based on their chemical nature, relative insulating ability, and typical applications. These categories describe general physical and chemical characteristics of the coatings that are useful in making broad estimates of their insulating ability and suitability for various applications.

[1] This classification is under the jurisdiction of ASTM CommitteeA06 on Magnetic Properties and is the direct responsibility of Subcommittee A06.02 on Material Specifications.

Current edition approved Oct. 1, 2003. Published November 2003. Originally published in 1997. Last previous edition approved in 1997 as A 976 – 97.

[2] For referenced ASTM standards, visit the ASTM website, www.astm.org, or contact ASTM Customer Service at service@astm.org. For Annual Book of ASTM Standards volume information, refer to the standard's Document Summary page on the ASTM website.

Copyright © ASTM International, 100 Barr Harbor Drive, PO Box C700, West Conshohocken, PA 19428-2959, United States.

Copyright ASTM International
Provided by IHS under license with ASTM
No reproduction or networking permitted without license from IHS
Not for Resale

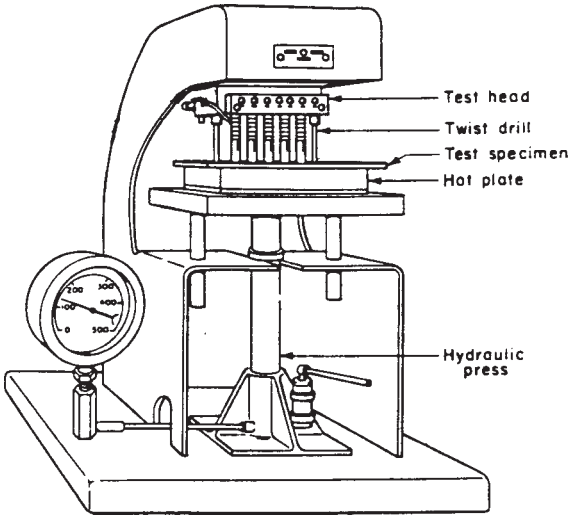

FIG. 1 Apparatus of Surface Insulation Resistivity Measurement for Franklin Test

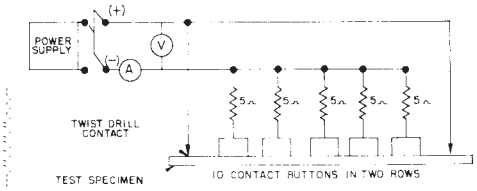

FIG. 2 Diagram of Connections for Contacts and Resistors for Franklin Test

5. Basis of Classification

5.1 The insulating coatings are categorized according to general composition, relative insulating ability, and functionality (Table 1). The purpose of this classification is to create a nomenclature for the various coating types. It is not the intent of this classification to specify coating requirements. Specific properties required by coating users should be negotiated with the steel producer.

5.2 To reduce confusion regarding the various categories of coatings, this classification follows the "C" type of designation initially used by the American Iron and Steel Institute for describing insulating coatings.[3] The "C" is included in the coating designation because insulating coatings for electrical steels have been historically referred to as "coreplate" coatings. This classification includes new coatings and test methods not included in the most recent edition of the AISI classification. Note that the electrical steel committee of the AISI is no longer active, and the 1983 edition of the coating classification document was the last edition of the coating classification to be published.[4]

6. Test Methods

6.1 The surface insulation resistivity of an insulating layer may be measured using Test Methods A 717/A 717M. In this test method, ten metallic contacts of fixed area are applied to one of the surfaces of the test specimen, and electrical contact is made with the base metal by two drills (Fig. 1 and Fig. 2). The effectiveness of the coating (surface insulation) then is indicated by a measurement of the average electrical current flowing between the contacts and the base metal under specified applied voltage. This current value often is referred to as the "Franklin Current" and may be used directly as an indicator of the quality of the insulation. Specifically, a Franklin Current of zero corresponds to a perfect insulator. A Franklin Current of 1 ampere corresponds to a perfect conductor. If desired, an apparent surface insulation resistivity value for the insulating layer may be calculated as follows:

$$R_i = 6.45\ \{(1/I) - 1\}\ \text{in}\ \Omega\cdot\text{cm}^2/\text{lamination} \quad (1)$$

or

$$R_i = 645\ \{(1/I) - 1\}\ \text{in}\ \Omega\cdot\text{mm}^2/\text{lamination} \quad (2)$$

where:

R_i = surface insulation resistivity of test sample (two surfaces in series) in $\Omega\cdot\text{cm}^2$/lamination or $\Omega\cdot\text{mm}^2$/lamination and

I = ammeter reading in A (also known as Franklin Current).

Note that this test method often is referred to as the Franklin test. The Franklin test is a widely used method for evaluating the effectiveness of surface insulation on electrical steels.

6.2 The average resistance of two adjacent insulating surfaces in contact with each other, interlaminar resistance, may be measured using Test Method A 937/A 937M. Because the interlaminar resistance is influenced by coating-to-coating contact, this test method is particularly useful for providing an estimate of the interlaminar resistance in a stacked or wound core in which coated surfaces are in contact with each other. Furthermore, this test method is particularly useful for electrical steels coated with insulating coatings having surface insulation resistivities in excess of 300 $\Omega\cdot\text{cm}^2$ (30 $\text{k}\Omega\cdot\text{mm}^2$) (that is, less than 0.02 A when measured according to Test Method A 717/A 717M). In this Two-Surface test method, intimate physical contact of these surfaces is achieved by means of test heads that force a defined surface area into contact under a specified pressure. For the interlaminar resistance measurement, electrical contact is established between the test specimen and a constant direct current source using metallic contacts. The tester uses two sets of metallic contacts, which penetrate the exposed test surfaces into the base metal, to form a four–probe configuration (Fig. 3). A continuous electrical path is formed between the contacts and the constant current source when the metallic contacts penetrate through the coating on the exposed test surfaces to the underlying base metal. When current flows in the circuit, the dc voltage developed in the circuit is measured with a voltmeter. The resistance of the insulation is then determined by Ohm's law.

[3] *Steel Products Manual on Flat–Rolled Electrical Steel*, American Iron and Steel Institute, 1101 17th St., N.W., Washington, DC 20036–4700, January 1983.

[4] Loudermilk, D. S. and Murphy, R. A., "Overview of Technology of Insulating Coatings for Grain–Oriented and Nonoriented Electrical Steels," Fifteenth Annual Conference on Properties and Applications of Magnetic Materials, Illinois Institute of Technology, Chicago, IL, May 1996.

Copyright ASTM International
Provided by IHS under license with ASTM
No reproduction or networking permitted without license from IHS
Not for Resale

TABLE 1 Classification of Insulating Coatings for Electrical Steels

Coating Name	Coating Description/Characteristics
C-0	Oxide that is formed naturally on the steel surface during mill processing. This oxide layer is thin, tightly adherent, and provides sufficient insulating quality for most small cores. The oxide layer will withstand normal stress-relief annealing temperatures. The insulation quality is affected by the oxidizing potential of the user's anneal, that is, the oxidized surface condition may be enhanced by controlling the atmosphere to be more or less oxidizing to the surface. It is not appropriate to assert a maximum acceptable Franklin test current for this coating.
C-1	User-formed oxide that is created on the steel surface by contact with an oxidizing furnace atmosphere at the end of the heat-treating cycle. This coating usually is bluish to gray in color and used for various electrical steel applications. It is not appropriate to assert a maximum acceptable Franklin test current for this coating.
C-2	Inorganic insulating coating predominantly comprised of magnesium silicate and used on grain-oriented electrical steel. The coating is formed from the reaction of the annealing separator with the steel surface during high-temperature annealing. The resulting coating often is referred to as "mill glass" or "glass film"even though the coating is not technically a glass. The coating is very abrasive, and hence, is not typically used for stamped laminations. The primary application of this coating is air-cooled or oil-immersed wound distribution transformers. This coating will withstand normal stress-relief annealing temperatures. It is not appropriate to assert a maximum acceptable Franklin test current for this coating.
C-3	Organic varnish/enamel coating that is applied to the steel surface and cured by heating. Used for fully processed nonoriented and other electrical steels. It is appropriate to designate a maximum Franklin test current for this type of coating. The required Franklin test current is subject to agreement between the producer and user. This coating generally improves the punchability of the steel, and hence, is quite suitable for stamped laminations. This coating will not withstand typical stress-relief annealing temperatures. The coating normally is suitable for operating temperatures up to about 350°F (180°C).
C-4	Coating formed by chemical treating or phosphating of the steel surface followed by an elevated temperature curing treatment. This type of coating is used in applications requiring moderate levels of insulation resistance. This coating will withstand normal stress-relief annealing temperatures, but some reduction of surface insulation resistivity may occur during the anneal. It is appropriate to specify a maximum acceptable Franklin test current with a value agreed to by the producer and user.
C-4-AS	Thin film of C-4-type coating used primarily for preventing sticking of semiprocessed nonoriented electrical steel or cold-rolled motor lamination steel during quality anneals. This coating often is referred to as "anti-stick." It is not appropriate to specify a maximum acceptable Franklin test current for this coating.
C-5	Inorganic or mostly inorganic coating similar to C-4, to which ceramic fillers or film-forming inorganic components have been added to increase the insulating ability of the coating. The coating typically is a phosphate, chromate, or silicate coating, or combination thereof. Such coatings are applied to the steel surface and cured by heating. The coatings can be applied to grain-oriented electrical steels, nonoriented electrical steels, and cold-rolled motor lamination steels. A C-5 coating may be applied over top of a C-2 coating for applications in which extra surface insulation is required, for example, sheared laminations of grain-oriented electrical steel for cores of power transformers. C-5 coatings are used for applications requiring a high-surface resistivity. It is appropriate to designate a maximum Franklin test current for this type of coating before stress-relief annealing. The required Franklin test current is subject to agreement between the producer and user. The coating will withstand stress-relief annealing up to 1550°F (840°C) in neutral or slightly reducing furnace atmospheres, but some reduction in surface insulation resistivity may occur during the anneal. The coating will withstand burn-off treatments at 600-1000°F (320-540°C) used to remove stator winding insulation during rebuilding of motors. The coating can be used in air-cooled or oil-immersed cores. In some cases, organic components may be added to C-5 coatings to enhance punchability. The applications, use, and properties of such coatings are similar to those of inorganic C-5 coatings. The user should consult the producer if there are particular concerns with coating off-gassing during welding or elevated temperature exposure of the coated steel.
C-5-AS	Thin film of C-5-type coating used primarily for preventing sticking of semiprocessed nonoriented electrical steel and cold-rolled motor lamination steel during quality anneals. This coating often is referred to as "anti-stick." It is not appropriate to assert a maximum acceptable Franklin test current for this coating.
C-6	Organic-based coating to which inorganic fillers have been added to increase the insulating ability of the coating. The coating is applied to the steel surface and cured by heating. C-6 coatings typically are used for fully processed nonoriented electrical steels. It is appropriate to designate a maximum Franklin test current for this type of coating. The required Franklin test current is subject to agreement between the producer and user. The coating will withstand burn-off treatments used to remove stator winding insulation during rebuilding of motors, done at 600-1000°F (320-540°C), but is not considered to be a coating that will withstand normal stress-relief annealing. The coating generally improves the punchability of the steel, and hence, is suitable for stamped laminations.

Copyright ASTM International
Provided by IHS under license with ASTM
No reproduction or networking permitted without license from IHS
Not for Resale

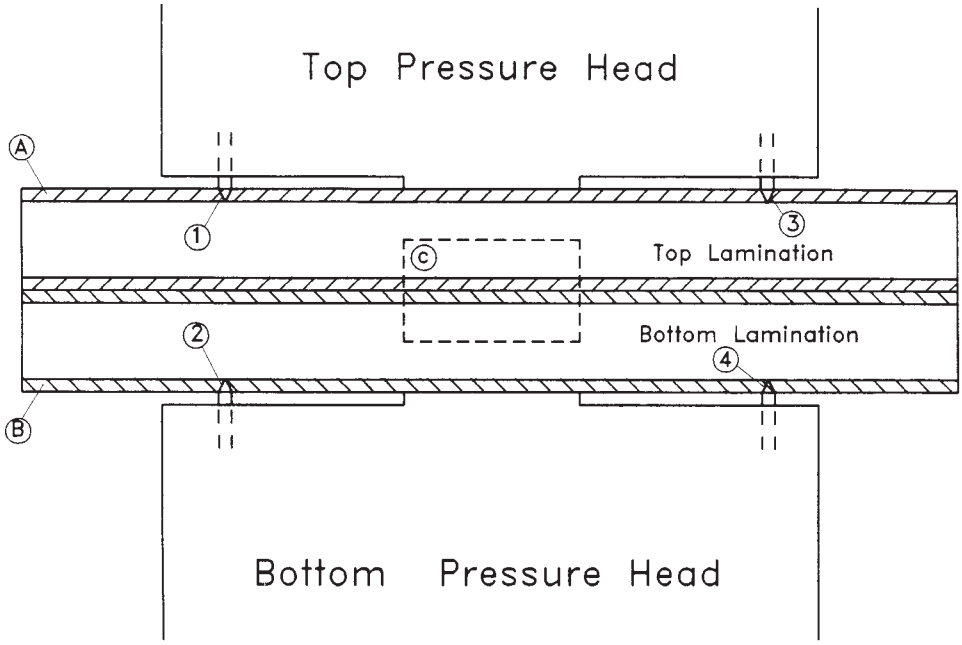

Exposed Test Surfaces:	A and B
Insulating Coating Layers Under Test:	C
Metallic Contacts Carrying Current:	1 and 2
Metallic Contacts Measuring Voltage:	3 and 4

Note: Contacts pierce insulating coating and contact substrate

NOTE 1—Contacts pierce insulating coating and contact substrate

FIG. 3 Schematic Illustration of Four-Probe Configuration for Two-Surface Test

7. Keywords

7.1 coating; coreplate; Franklin test; insulation; insulating coating; interlaminar resistance; steel; surface insulation resistivity; Two–Surface test; varnish

ASTM International takes no position respecting the validity of any patent rights asserted in connection with any item mentioned in this standard. Users of this standard are expressly advised that determination of the validity of any such patent rights, and the risk of infringement of such rights, are entirely their own responsibility.

This standard is subject to revision at any time by the responsible technical committee and must be reviewed every five years and if not revised, either reapproved or withdrawn. Your comments are invited either for revision of this standard or for additional standards and should be addressed to ASTM International Headquarters. Your comments will receive careful consideration at a meeting of the responsible technical committee, which you may attend. If you feel that your comments have not received a fair hearing you should make your views known to the ASTM Committee on Standards, at the address shown below.

This standard is copyrighted by ASTM International, 100 Barr Harbor Drive, PO Box C700, West Conshohocken, PA 19428-2959, United States. Individual reprints (single or multiple copies) of this standard may be obtained by contacting ASTM at the above address or at 610-832-9585 (phone), 610-832-9555 (fax), or service@astm.org (e-mail); or through the ASTM website (www.astm.org).

Copyright ASTM International
Provided by IHS under license with ASTM
No reproduction or networking permitted without license from IHS
Not for Resale