Designation: A 974 – 97 (Reapproved 2003)

Standard Specification for Welded Wire Fabric Gabions and Gabion Mattresses (Metallic-Coated or Polyvinyl Chloride (PVC) Coated)[1]

This standard is issued under the fixed designation A 974; the number immediately following the designation indicates the year of original adoption or, in the case of revision, the year of last revision. A number in parentheses indicates the year of last reapproval. A superscript epsilon (ε) indicates an editorial change since the last revision or reapproval.

1. Scope

1.1 This specification covers gabions and gabion mattresses produced from metallic-coated welded wire fabric, and metallic-coated wire for spiral binders, lacing wire, and stiffeners used to assemble the product. The metallic-coated fabric may be polyvinyl chloride (PVC) coated after fabrication. The spiral binders, lacing wire, and stiffeners may be PVC coated after metallic coating. Polyvinyl chloride hereinafter will be designated as PVC.

1.2 Welded wire fabric for gabions and gabion mattresses is produced in five styles, based on the kind of coating, as described in Section 4.

1.3 The values stated in inch-pound units are to be regarded as the standard. The values given in brackets are for information only.

1.4 This specification references notes and footnotes which provide explanatory material. These notes and footnotes (excluding those in tables and figures) shall not be considered as requirements of this specification.

1.5 The following safety hazards caveat pertains only to the test methods portion, Section 13, of this specification: *This standard does not purport to address all of the safety concerns, if any, associated with its use. It is the responsibility of the user of this standard to establish appropriate safety and health practices and determine the applicability of regulatory limitations prior to use.*

2. Referenced Documents

2.1 *ASTM Standards:*

A 90/A 90M Test Method for Weight (Mass) of Coating on Iron and Steel Articles with Zinc or Zinc-Alloy Coating[2]

A 185 Specification for Steel Welded Wire Fabric, Plain, for Concrete Reinforcement[3]

A 370 Test Methods and Definitions for Mechanical Testing of Steel Products[4]

A 428 Test Method for Weight of Coating on Aluminum Coated Iron and Steel Articles[2]

A 641 Specification for Zinc Coated (Galvanized) Carbon Steel Wire[2]

A 809 Specification for Aluminum Coated (Aluminized) Steel Wire[2]

A 853 Specification for Steel Wire, Carbon, for General Use[4]

A 856/A 856M Specification for Zinc-5 % Aluminum-Mischmetal Alloy-Coated Carbon Steel Wire[2]

A 902 Terminology Relating to Metallic Coated Steel Products[2]

B 117 Practice for Operating Salt Spray (Fog) Testing Apparatus[5]

D 638 Test Method for Tensile Properties of Plastics[6]

D 746 Test Method for Brittleness Temperature of Plastics and Elastomers by Impact[6]

D 792 Test Method for Specific Gravity (Relative Density) and Density of Plastics by Displacement[6]

D 1242 Test Methods for Resistance of Plastic Materials to Abrasion[6]

D 1499 Practice for Operating Light- and Water-Exposure Apparatus (Carbon-Arc Type) for Exposure of Plastics[6]

D 2240 Test Method for Rubber Property-Durometer Hardness[7]

G 23 Practice for Operating Light-Exposure Apparatus (Carbon-Arc Type) With and Without Water for Exposure of Nonmetallic Materials[8]

3. Terminology

3.1 *Definitions*—Refer to Terminology A 902 for general terminology relating to metallic-coated steel products.

3.2 *Definitions of Terms Specific to This Standard:*

3.2.1 *gabion, n*—a wire fabric container, uniformly partitioned, of variable size, interconnected with other similar containers, and filled with stone at the site of use, to form flexible, permeable, monolithic structures such as retaining

[1] This specification is under the jurisdiction of ASTM Committee A05 on Metallic Coated Iron and Steel Products and is the direct responsibility of Subcommittee A05.12 on Wire Specifications.

Current edition approved May 10, 2003. Published June 2003. Originally approved in 1997. Last previous edition approved in 1997 as A 974 - 97.

[2] *Annual Book of ASTM Standards*, Vol 01.06.

[3] *Annual Book of ASTM Standards*, Vol 01.04.

[4] *Annual Book of ASTM Standards*, Vol 01.03.

[5] *Annual Book of ASTM Standards*, Vol 03.02.

[6] *Annual Book of ASTM Standards*, Vol 08.01.

[7] *Annual Book of ASTM Standards*, Vol 09.01.

[8] *Annual Book of ASTM Standards*, Vol 14.02.

Copyright © ASTM International, 100 Barr Harbor Drive, PO Box C700, West Conshohocken, PA 19428-2959, United States.

Copyright ASTM International
Provided by IHS under license with ASTM
No reproduction or networking permitted without license from IHS
Not for Resale

walls, sea walls, channel linings, revetments, and weirs for erosion control (see Fig. 1). Typical gabion sizes are shown in Table 1.

3.2.2 *gabion mattress*, *n*—a gabion with relatively small height in relation to the lateral dimensions, generally used for lining channels (see Fig. 2). Typical gabion mattress sizes are shown in Table 2.

3.2.3 *lacing wire*, *n*— *for gabions and gabion mattresses*, a metallic-coated steel wire or metallic-coated steel wire with PVC coating used to assemble and interconnect empty gabion units, and to close and secure stone-filled units, used as an alternate to spiral binders.

3.2.4 *spiral binder*, *n*— *for gabions and gabion mattresses*, a length of metallic-coated steel wire or metallic-coated steel wire with PVC coating preformed into a spiral, used to assemble and interconnect empty gabion units, and to close and secure stone-filled units, used as an alternate to lacing wire.

3.2.5 *stiffener*, *n*—*for gabions*, a length of metallic-coated steel wire or metallic-coated steel wire with PVC coating used for support by forming a diagonal brace across the corners, inside of the gabion container. Stiffeners are produced using lacing wire for on-site applications or shipped preformed using heavier wire gage as shown in Table 3.

3.2.6 *welded wire fabric*, *n*—material composed of a series of longitudinal and transverse steel wires arranged substantially at right angles to each other, and welded together at the points of intersection by electrical resistance welding to form fabricated sheets.

4. Classification

4.1 Welded wire gabions are classified according to coating, as follows:

4.1.1 *Style 1*, consists of welded wire fabric made from wire which is zinc-coated before being welded into fabric. Spiral binders, lacing wire, and stiffeners are produced from zinc-coated wire.

4.1.2 *Style 2*, consists of welded wire fabric which is made from uncoated wire and the fabric is subsequently zinc-coated after fabrication. Spiral binders, lacing wire, and stiffeners are produced from zinc-coated wire.

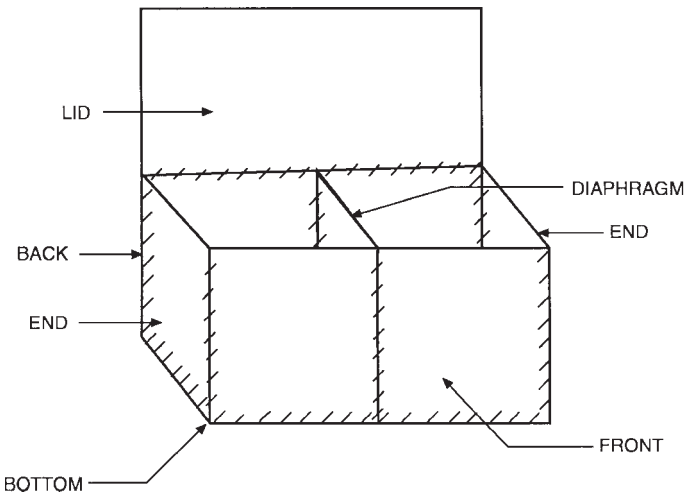

FIG. 1 Gabion

4.1.3 *Style 3*, consists of welded wire fabric made from wire which is coated with zinc-5 % aluminum-mischmetal alloy (Zn-5Al-MM) before being welded into fabric. Spiral binders, lacing wire, and stiffeners are also produced from zinc-5 % aluminum-mischmetal alloy (Zn-5Al-MM) coated wire.

4.1.4 *Style 4*, consists of welded wire fabric made from wire which is aluminum-coated before being welded into fabric. Spiral binders, lacing wire, and stiffeners are also produced from aluminum-coated (aluminized) wire.

4.1.5 *Style 5*, consists of welded wire fabric, spiral binders, lacing wire, and stiffeners as Styles 1, 2, 3, or 4, and overcoated with PVC.

5. Ordering Information

5.1 Orders for material to this specification should include the following information:

5.1.1 Quantity (number of units) as shown on plan,

5.1.2 Gabions or gabion mattresses,

5.1.3 Size (length by width by height),

5.1.4 Style of coating (Section 4), including the specific style to be furnished, or all acceptable styles,

5.1.5 ASTM designation and year of issue,

5.1.6 Any special requirements (see 8.2.5 and Note 2), and

5.1.7 Certification, if required (see 15.1).

NOTE 1—A typical ordering description is as follows: 100 gabions, 6 by 3 by 3 ft, as shown on plans; Style 1, 2, 3, or 4; with required spiral binders, lacing wire, and stiffeners; conforming to ASTM A 974.

6. Material and Manufacture

6.1 The wire used in the manufacture of welded wire fabric for use in gabions shall conform to the specifications in 6.1.1 as appropriate for the style ordered, except the tensile strength shall conform to 7.1. The wire may be produced from any grade of steel listed in Specification A 853.

6.1.1 Style 1 welded wire fabric shall be manufactured from zinc-coated steel wire conforming to Specification A 641. Style 2 welded wire fabric shall be manufactured from uncoated steel wire conforming to Specification A 853, and the fabric subsequently zinc-coated by the hot-dip process. Style 3 welded wire fabric shall be manufactured from Zn-5Al-MM coated steel wire conforming to Specification A 856/A 856M. Style 4 welded wire fabric shall be manufactured from aluminum-coated steel wire conforming to Specification A 809.

6.2 Spiral binders, lacing wire, and stiffeners shall be made of wire having a tensile strength in accordance with 7.1, having the same coating material as the welded wire fabric furnished on the order, and conforming to Specification A 641, A 856/A 856M, or A 809, as appropriate

6.3 Wire for welded wire fabric shall be assembled by automatic machines or other suitable mechanical means that will ensure accurate spacing and alignment of all members of the finished fabric. Longitudinal and transverse members of the welded wire fabric shall be connected at every intersection in accordance with the requirements of 7.2 by the process of electric resistance welding, which employs the principle of fusion combined with pressure.

6.4 The PVC coating used in the manufacture of PVC-coated gabions and gabion mattresses shall conform to the properties in 8.2 and 8.3

Copyright ASTM International
Provided by IHS under license with ASTM
No reproduction or networking permitted without license from IHS
Not for Resale

TABLE 1 Typical Gabion Sizes

Length, ft [cm]	Width, ft [cm]	Height, ft [cm]	Number of Cells	Capacity, yd^3 [m^3]
6 [182.9]	3 [91.4]	3 [91.4]	2	2.0 [1.53]
9 [274.3]	3 [91.4]	3 [91.4]	3	3.0 [2.29]
12 [365.8]	3 [91.4]	3 [91.4]	4	4.0 [3.06]
6 [182.9]	3 [91.4]	1.5 [45.7]	2	1.0 [0.765]
9 [274.3]	3 [91.4]	1.5 [45.7]	3	1.5 [1.15]
12 [365.8]	3 [91.4]	1.5 [45.7]	4	2.0 [1.53]
6 [182.9]	3 [91.4]	1 [30.5]	2	0.66 [0.50]
9 [274.3]	3 [91.4]	1 [30.5]	3	1.0 [0.765]
12 [365.8]	3 [91.4]	1 [30.5]	4	1.33 [1.02]

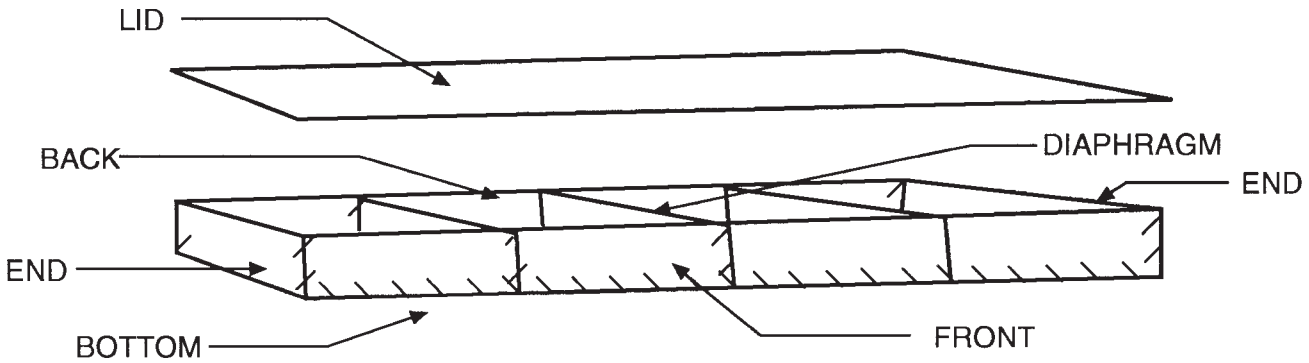

FIG. 2 Gabion Mattress

TABLE 2 Typical Gabion Mattress Sizes

Length, ft [cm]	Width, ft [cm]	Height, ft [cm]	Number of Cells	Area, yd^2 [m^2]
9 [274.3]	6 [182.9]	0.5 [15.2]	3	6.0 [5.2]
12 [365.8]	6 [182.9]	0.5 [15.2]	4	8.0 [6.69]
9 [274.3]	6 [182.9]	0.75 [22.9]	3	6.0 [5.2]
12 [365.8]	6 [182.9]	0.75 [22.9]	4	8.0 [6.69]
9 [274.3]	6 [182.9]	1.0 [30.0]	3	6.0 [5.2]
12 [365.8]	6 [182.9]	1.0 [30.0]	4	8.0 [6.69]

TABLE 3 Wire Diameters

	Minimum Nominal Diameter, Metallic-Coated Wire, in. [mm][A]	Minimum Diameter PVC-Coated Wire (Including Coating), in. [mm][B]	Nominal Diameter, PVC-Coated Wire (Including Coating), in. [mm][C]
Wire for PVC-coated gabions	0.106 [2.7]	0.136 [3.5]	0.146 [3.7]
Wire for metallic-coated gabions	0.120 [3.05]	N/A	N/A
Wire for gabion mattresses	0.087 [2.2]	0.117 [3.0]	0.127 [3.2]
Spiral binders for gabions:			
PVC-coated	0.106 [2.7]	0.136 [3.5]	0.146 [3.7]
Metallic-coated	0.120 [3.05]	N/A	N/A
Spiral binders for gabion mattresses, metallic- or PVC-coated	0.087 [2.2]	0.117 [3.0]	0.127 [3.2]
Lacing wire	0.087 [2.2]	0.117 [3.0]	0.127 [3.2]
Stiffeners:			
Lacing wire	0.087 [2.2]	0.117 [3.0]	0.127 [3.2]
Preformed	0.120 [3.05]	0.150 [3.8]	0.160 [4.0]

[A]The metallic-coated wire shall have the size tolerances in accordance with Specifications A 641, A 856/A 856M, and A 809, as applicable.
[B]The minimum thickness of PVC which covers the wire shall be 15 mils [0.015 in. or 0.38 mm], measured radially at any cross section transverse to the wire length.
[C]The nominal thickness of PVC which covers the wire shall be 20 mils [0.020 in. or 0.51 mm], measured radially at any cross section transverse to the wire length.

6.4.1 The PVC-coated welded wire fabric shall have the PVC coating fused and bonded onto the metallic-coated welded wire fabric after fabrication of mesh. No cutting of the panels closer than ¼ ± ⅛ in. [6 ± 3.18 mm] to the weld shall be permitted after fabrication in order to prevent exposure near the welds.

6.4.2 The PVC-coated wire for spiral binders, lacing wire, and stiffeners shall have the PVC coating fused and bonded or extruded and adhered, onto the metallic-coated wire.

6.5 Gabions and gabion mattresses shall be manufactured with all components mechanically connected at the production facility with the exception of the mattress lid which is produced

Copyright ASTM International
Provided by IHS under license with ASTM
No reproduction or networking permitted without license from IHS
Not for Resale

separately from the base (Fig. 1 and Fig. 2). All gabions (Fig. 3) and gabion mattresses (Fig. 4) shall be supplied in the collapsed form, either folded and bundled or rolled, for shipping.

7. Mechanical Properties

7.1 *Tensile Strength*— The tensile strength of the wire used for the welded wire fabric, spiral binders, lacing wire, and stiffeners shall be soft or medium in accordance with the requirements of Specifications A 641 (Style 1), A 856/A 856M (Style 3), and A 809 (Style 4) or hard drawn in accordance with Specification A 853 (Style 2). The cross-sectional area of the test specimen shall be based on the diameter of the metallic coated wire. All the wires used in the fabrication of gabions and gabion mattresses must use the same temper wire per given order.

7.2 *Weld Shear Strength*—The minimum average shear value in pounds-force shall be 70 % of the breaking strength of the wire or as indicated in the table as follows, whichever is greater, when tested in accordance with 13.4 (see Specification A 185). Typical minimum average shear strengths as specified are as follows:

Wire Diameter, in. [mm]	Minimum Average Shear Strength, lb [N]	Minimum Shear Strength, lb [N]
0.087 [2.2]	292 [1300]	225 [1000]
0.106 [2.7]	472 [2100]	360 [1600]
0.120 [3.05]	584 [2600]	450 [2000]

7.2.1 *Conformance to Requirement*—The material shall be deemed to conform with the requirements for weld shear strength if the average of the test results of the first four specimens tested complies with the value in 7.2, or if the average of the test results for all welds tested complies with the value in 7.2.

7.3 *Panel to Panel Joint Strength*—The minimum strength of the joined panels, when tested as described in 13.5, shall be as follows:

	Exterior Panels, lb/ft [kN/m]	Diaphragm Panels, lb/ft [kN/m]
Gabions	1400 [20.4]	600 [8.7]
Gabion mattresses	600 [8.7]	300 [4.35]

8. Physical Properties

8.1 *Metallic Coating*— The coating weights shall conform to the requirements of Specification A 641 Class 3 for zinc coating (including the zinc coating on the Style 2 fabric), Specification A 856/A 856M Class 3 for Zn-5Al-MM coating, or Specification A 809 for aluminum coating.

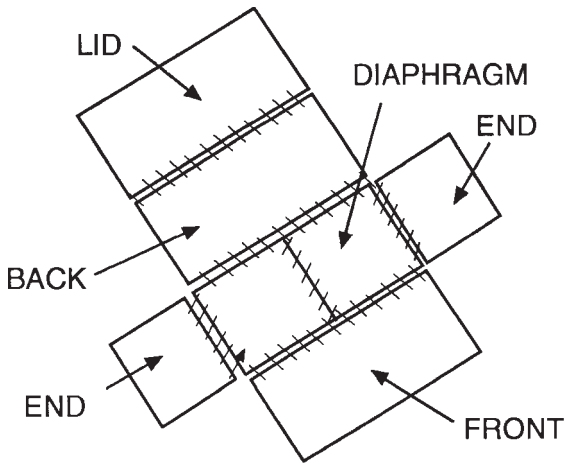

FIG. 3 Pre-Assembled Gabion

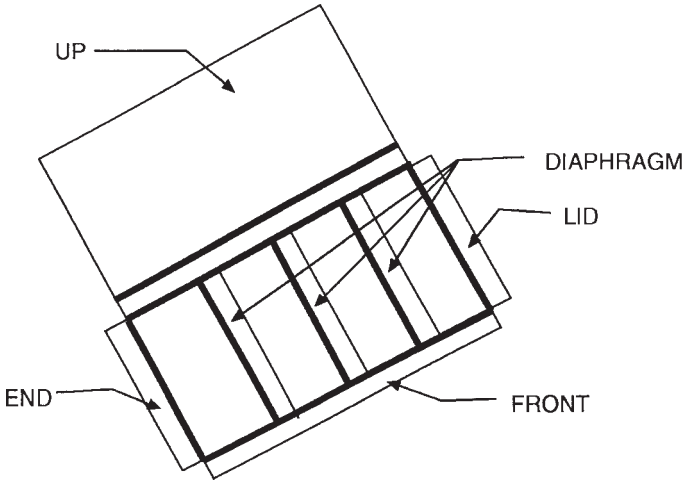

FIG. 4 Pre-Assembled Gabion Mattress

8.2 *PVC for Coating*— The initial properties of PVC coating material shall have a demonstrated ability to conform to the following requirements:

8.2.1 *Specific Gravity*— In the range from 1.20 to 1.40, when tested in accordance with Test Method D 792.

8.2.2 *Tensile Strength*— Not less than 2275 psi [15.7 MPa], when tested in accordance with Test Method D 638.

8.2.3 *Modulus of Elasticity*—Not less than 1980 psi [13.7 MPa] at 100 strain, when tested in accordance with Test Method D 638.

8.2.4 *Hardness*—Shore" A" not less than 75, when tested in accordance with Test Method D 2240.

8.2.5 *Brittleness Temperature*—Not higher than 15°F [-9°C], or lower temperature when specified by the purchaser, when tested in accordance with Test Method D 746.

NOTE 2—The maximum brittleness temperature should be at least 15°F [8°C] below the minimum temperature at which the gabions will be handled or filled.

8.2.6 *Resistance to Abrasion*—The percentage of the weight loss shall be less than 12 %, when tested in accordance with Test Methods D 1242, Method B, at 200 cycles, CSI-A abrader tape, 80 grit.

8.2.7 *Salt Spray Exposure and Ultraviolet Light Exposure*:

8.2.7.1 The PVC shall show no effect after 3000 h of salt spray exposure in accordance with Practice B 117.

8.2.7.2 The PVC shall show no effect of exposure to ultraviolet light with test exposure of 3000 h, using apparatus Type E and 63°C, when tested in accordance with Practices D 1499 and G 23.

8.2.7.3 *Evaluation of Coating After Salt Spray and Ultraviolet Exposure Test*—After the salt spray test and exposure to ultraviolet light as specified in 8.2.7.1 and 8.2.7.2, the PVC coating shall not show cracks nor noticeable change of color, or blisters or splits. In addition, the specific gravity, tensile strength, modulus of elasticity, and resistance to abrasion shall not change more than 6 %, 25 %, 25%, and 10 %, respectively, from their initial values.

Copyright ASTM International
Provided by IHS under license with ASTM
No reproduction or networking permitted without license from IHS

Not for Resale

8.3 *PVC Coating on Wire*—The initial properties of the PVC coating on the wire and welded wire fabric shall have a demonstrated ability to conform to the following requirements:

8.3.1 *Adhesion*—The PVC coating shall adhere to the wire such that the coating breaks rather than separates from the wire when tested in accordance with 13.3.

8.3.2 *Mandrel Bend*— The PVC-coated wire when subjected to a single 360° bend at -0°F [-18°C] around a mandrel ten times the diameter of the wire, shall not exhibit breaks or cracks in the PVC coating.

9. Dimensions and Tolerances

9.1 The diameter of metallic-coated wire shall conform to Table 1

9.2 The minimum thickness of the PVC coating and the wire shall be as shown in Table 1.

9.3 Gabions shall have a mesh opening of 3 by 3 in. [76 by 76 mm]. Gabion mattresses shall have a mesh opening of 1½ by 3 in. [38 by 76 mm]. Mesh opening shall be considered to be center-to-center distance between two consecutive longitudinal or transverse wires. The permissible tolerance is ±⅛ in. [±3.2 mm] maximum.

9.4 Spiral binders shall have the maximum inside diameter of 2½ in. [63.5 mm] and a maximum pitch of 3 in. [76.2 mm].

9.5 The width, height, and length of the gabion as assembled shall not differ more than ±5 % from the ordered size prior to filling.

9.6 The width and length of the gabion mattress as assembled shall not differ more than ±5 %, and the height shall not differ more than ±10 % from the ordered size prior to filling.

10. Workmanship

10.1 Wire of proper grade and quality, when fabricated in the manner herein required, shall result in a strong, serviceable mesh-type product having substantially square or rectangular openings. It shall be fabricated and finished in a workmanlike manner, as determined by visual inspection, and shall conform to this specification.

11. Sampling

11.1 Samples for determining the mechanical and physical properties of welded wire fabric shall be obtained by cutting from the finished fabric a full-width section of sufficient length to perform the testing. Samples for determining the mechanical and physical properties of coated wire used for spiral binders, lacing wire, and stiffeners shall be selected at random in sufficient number to perform the testing.

12. Number of Tests

12.1 Perform a minimum of four tests for conformance to tensile strength of metallic-coated wire, weld shear strength, wire and fabric dimensions, metallic coating weight, PVC coating thickness, adhesion of PVC coating, and mandrel bend from each 200 000 ft^2 [19 000 m^2] of fabric or remaining fraction thereof. Perform a minimum of four tests for conformance to tensile strength , wire dimensions, coating weight, PVC coating thickness, adhesion of PVC coating, and mandrel bend from the wire accessories used with each 200 000 ft^2 of fabric. The lot will be acceptable if the results of all four tests conform to the requirements.

13. Test Methods

13.1 *Metallic Coating Weight*—Perform coating weight tests in accordance with Test Methods A 90/A 90M or A 428 as applicable. For coating weight tests on wire of the welded wire fabric, secure multiple lengths between welds, including both longitudinal and transverse wire, and cut no closer than ¼ in. [6.4 mm] from any weld. The combined length shall be 12 in. [305 mm], minimum, but preferably about 24 in. [610 mm].

13.2 *PVC Coating Thickness*:

13.2.1 Determine the thickness of the PVC coating on an individual piece of wire removed from the fabric.

13.2.2 Determine the diameter of the metallic coated wire after stripping the PVC coating by chemical means. Determine the thickness of the PVC coating by scraping the coating from one side of the wire and measuring the reduced diameter with a micrometer. The thickness of the coating at this point is the difference between the measurement thus obtained and the measured diameter of the metallic coated wire. Determine the thickness of the coating at right angles to the first determination in a similar manner. When removing the PVC coating by scraping, take care not to remove any of the metallic surface.

13.3 *PVC Adhesion Test*—Make two cuts parallel to the axis of the wire through the coating, approximately 1/16 in. [1.6 mm] apart, at least ½ in. [12.7 mm] long. With a knife, peel back a section of the coating between ⅛ in. [3.2 mm] and ¼ in. [6.4 mm] long to produce a tab. Attempt to remove the 1/16 -in. strip of coating by pulling the tab. The lot shall be acceptable if the coating breaks rather than separates from the core wire on all four specimens.

13.4 *Weld Shear Strength of Fabric*:

13.4.1 *Scope*—This test method covers the procedure for determining the strength of welded intersections of welded wire fabric.

13.4.2 *Significance and Use*—The weld shear strength is a measure of the ability of welds in wire fabric to resist the forces imposed on the wires tending to pull them apart.

13.4.3 *Apparatus*—Use a testing fixture such as shown in Fig. 5, which is intended to stress the vertical wire close to its centerline, and to prevent rotation of the horizontal wire. This fixture can be used in most tensile testing machines and should be hung in a ball and socket arrangement at the center of the machine. This or a similarly effective fixture designed on the same principle, is acceptable (see Specification A 185).

13.4.4 *Test Specimens*— Test specimens shall be obtained by cutting, from the finished fabric, a full-width section including at least two transverse wires.

13.4.4.1 The transverse wire of each specimen shall extend approximately 1 in. [25 mm] on each side of the longitudinal wire. The longitudinal wire of each test specimen shall be of such length below the transverse wire so as to be adequately engaged by the grips of the testing machine. It shall be of such length above the transverse wire that its end shall be above the centerline of the upper bearing of the testing device.

13.4.4.2 A test specimen shall consist of four welds selected at random from one transverse wire for weld shear strength. If

Copyright ASTM International
Provided by IHS under license with ASTM
No reproduction or networking permitted without license from IHS
Not for Resale

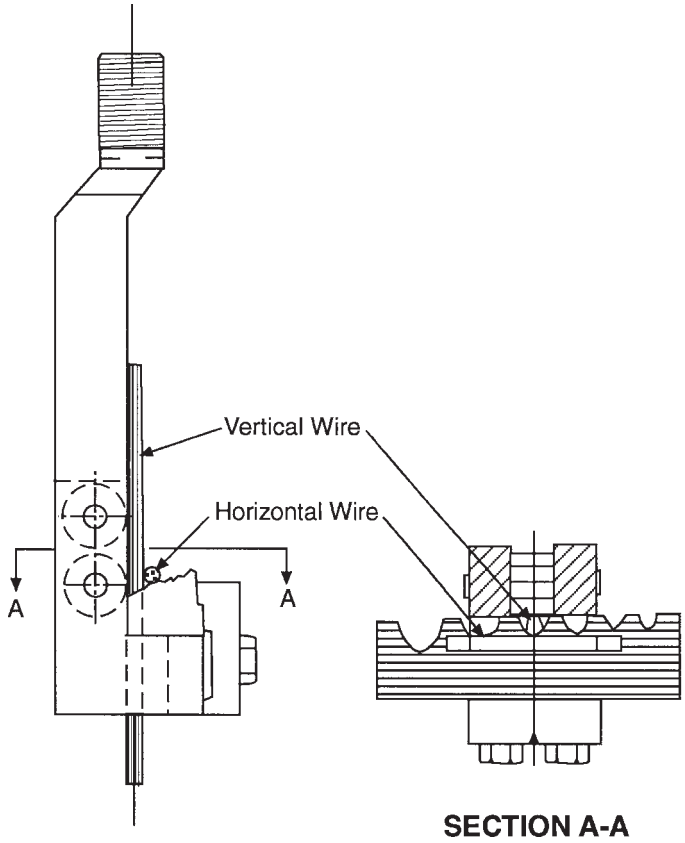

NOTE 1—See Specification A 185 for additional information on weld shear testing. A detailed drawing showing complete dimensions of testing fixture may be obtained from ASTM. Order Adjunct No. 12-101850-00.

FIG. 5 Welded Wire Fabric Weld Tester

the width of the fabric is such as to not include four welds that are suitable for testing, additional welds shall be taken from a second transverse wire to total four. (Welds at the edge wire are excluded from testing as there is no overhang to permit proper testing). If the average weld shear strength from the four specimens does not conform to the requirement of 7.2, test all the welds across the width (excluding edge welds) on one transverse wire, or on two transverse wires if some of the initial specimens were from the second transverse wire.

13.4.5 *Weld Shear Test Procedure*—Insert the long end of the vertical wire through the notch in the anvil. The vertical wire shall be in contact with the surface of the free-rotating rollers while the horizontal wires shall be supported by the anvil on each side of the slot. The bottom jaws of the testing machine shall grip the lower end of the vertical wire and the load shall be applied at a rate of stressing not to exceed 100 000 psi/min [689 MPa/min]

13.4.6 *Report*—Report the test results to the nearest 5 lbf [25 N] for both individual results and the average of all tests.

13.4.7 *Precision and Bias*—The precision and bias of this test method for measuring weld shear strength are as specified in the test method included in Specification A 185.

13.5 *Panel to Panel Connection*—Join a set of two identical rectangular gabion panels, each with a width of 36 in. and a minimum length of 9 in., by any of the following methods:

13.5.1 *Lacing Wire*—Lacing wire shall be alternately single- and double-looped with spacing not to exceed 6 in. Secure ends with two complete revolutions and finish with a one-half hitch.

13.5.2 *Spiral Binders*—Spiral binders shall pass through the openings. Securely tie at both ends to prevent unraveling when a load is applied in accordance with the minimum strength requirements of 7.3.

13.5.3 Mount each of the two panels on a loading machine with grips or clamps such that panels are uniformly secured along the full-width. The grips or clamps shall be designed to transmit only tension forces. The load then will be applied at a uniform rate not exceeding 50 lb/s until maximum load is obtained. The maximum load is reached when a drop of strength is observed with subsequent loading.

14. Inspection

14.1 Unless otherwise specified in the contract or purchase order, the producer is responsible for the performance of all inspection and test requirements of this specification. The producer may use his own or any other suitable facilities for the performance of the tests unless disapproved by the purchaser at the time the order is placed. The purchaser at their own expense shall have the right to perform any of the inspections and tests set forth in this specification when such tests are deemed necessary to ensure that the material conforms to the prescribed requirements.

Copyright ASTM International
Provided by IHS under license with ASTM
No reproduction or networking permitted without license from IHS
Not for Resale

15. Certification

15.1 When specified in the purchase order or contract, a producer's or supplier's certification shall be furnished to the purchaser that the material was manufactured, sampled, tested, and inspected in accordance with this specification and has been found to meet the requirements. When specified in the contract or purchase order, a report of the test results shall be furnished.

16. Keywords

16.1 gabion mattresses; gabions; metallic-coated fabric; PVC-coated fabric; steel wire; welded wire fabric

ASTM International takes no position respecting the validity of any patent rights asserted in connection with any item mentioned in this standard. Users of this standard are expressly advised that determination of the validity of any such patent rights, and the risk of infringement of such rights, are entirely their own responsibility.

This standard is subject to revision at any time by the responsible technical committee and must be reviewed every five years and if not revised, either reapproved or withdrawn. Your comments are invited either for revision of this standard or for additional standards and should be addressed to ASTM International Headquarters. Your comments will receive careful consideration at a meeting of the responsible technical committee, which you may attend. If you feel that your comments have not received a fair hearing you should make your views known to the ASTM Committee on Standards, at the address shown below.

This standard is copyrighted by ASTM International, 100 Barr Harbor Drive, PO Box C700, West Conshohocken, PA 19428-2959, United States. Individual reprints (single or multiple copies) of this standard may be obtained by contacting ASTM at the above address or at 610-832-9585 (phone), 610-832-9555 (fax), or service@astm.org (e-mail); or through the ASTM website (www.astm.org).

Copyright ASTM International
Provided by IHS under license with ASTM
No reproduction or networking permitted without license from IHS
Not for Resale