Designation: A 957/A 957M – 08

Standard Specification for Investment Castings, Steel and Alloy, Common Requirements, for General Industrial Use[1]

This standard is issued under the fixed designation A 957/A 957M; the number immediately following the designation indicates the year of original adoption or, in the case of revision, the year of last revision. A number in parentheses indicates the year of last reapproval. A superscript epsilon (ε) indicates an editorial change since the last revision or reapproval.

1. Scope*

1.1 This specification covers a group of requirements that are mandatory for castings produced by the investment casting process to meet the metallurgical requirements of the following steel casting specifications issued by ASTM.

ASTM Designation	Title of Specification
A 27/A 27M	Steel Castings, Carbon, for General Application
A 148/A 148M	Steel Castings, High-Strength, for Structural Purposes
A 297/A 297M	Steel Castings, Iron-Chromium and Iron-Chromium-Nickel, Heat-Resistant, for General Application
A 447/A 447M	Steel Castings, Chromium-Nickel-Iron Alloy (25-12 Class), for High-Temperature Service
A 494/A 494M	Castings, Nickel and Nickel Alloy
A 560/A 560M	Castings, Chromium-Nickel Alloy
A 732/A 732M	Castings, Investment, Carbon and Low Alloy Steel for General Application, and Cobalt Alloy for High Strength at Elevated Temperatures
A 743/A 743M	Castings, Iron-Chromium, Iron-Chromium-Nickel, Corrosion-Resistant, for General Application
A 744/A 744M	Castings, Iron-Chromium-Nickel, Corrosion Resistant, for Severe Service
A 747/A 747M	Steel Castings, Stainless, Precipitation Hardening
A 890/A 890M	Castings, Iron-Chromium-Nickel-Molybdenum Corrosion-Resistant, Duplex (Austenitic/Ferritic) for General Application
A 915/A 915M	Steel Castings, Carbon and Alloy, Chemical Requirements Similar to Standard Wrought Grades

1.2 This specification also covers a group of supplementary requirements that may be applied to the above specifications as indicated therein. These are provided for use when additional testing or inspection is desired and apply only when specified individually by the purchaser in the order.

1.3 When investment castings are ordered, the requirements stated in this specification form an integral part of the material specification. In cases of conflict, the requirements of this specification shall take precedence over the individual material specification requirements.

1.4 The values stated in either inch-pound or SI units are to be regarded separately as standard. Within the text, the SI units are shown in brackets. The values stated in each system are not exact equivalents; therefore, each system must be used independently of the other. Combining values from the two systems may result in nonconformance with the specification. Inch-pound units are applicable for material ordered to Specification A 957 and SI units for material ordered to Specification A 957M.

2. Referenced Documents

2.1 *ASTM Standards:* [2]

A 27/A 27M Specification for Steel Castings, Carbon, for General Application

A 148/A 148M Specification for Steel Castings, High Strength, for Structural Purposes

A 297/A 297M Specification for Steel Castings, Iron-Chromium and Iron-Chromium-Nickel, Heat Resistant, for General Application

A 370 Test Methods and Definitions for Mechanical Testing of Steel Products

A 447/A 447M Specification for Steel Castings, Chromium-Nickel-Iron Alloy (25-12 Class), for High-Temperature Service

A 488/A 488M Practice for Steel Castings, Welding, Qualifications of Procedures and Personnel

A 494/A 494M Specification for Castings, Nickel and Nickel Alloy

A 560/A 560M Specification for Castings, Chromium-Nickel Alloy

A 609/A 609M Practice for Castings, Carbon, Low-Alloy, and Martensitic Stainless Steel, Ultrasonic Examination Thereof

A 732/A 732M Specification for Castings, Investment, Carbon and Low Alloy Steel for General Application, and Cobalt Alloy for High Strength at Elevated Temperatures

[1] This specification is under the jurisdiction of ASTM Committee A01 on Steel, Stainless Steel and Related Alloys and is the direct responsibility of Subcommittee A01.18 on Castings.

Current edition approved March 1, 2008. Published April 2008. Originally approved in 1996. Last previous edition approved in 2006 as A 957 – 06.

[2] For referenced ASTM standards, visit the ASTM website, www.astm.org, or contact ASTM Customer Service at service@astm.org. For *Annual Book of ASTM Standards* volume information, refer to the standard's Document Summary page on the ASTM website.

***A Summary of Changes section appears at the end of this standard.**

Copyright © ASTM International, 100 Barr Harbor Drive, PO Box C700, West Conshohocken, PA 19428-2959, United States.

Copyright ASTM International
Provided by IHS under license with ASTM
No reproduction or networking permitted without license from IHS
Not for Resale

A 743/A 743M Specification for Castings, Iron-Chromium, Iron-Chromium-Nickel, Corrosion Resistant, for General Application

A 744/A 744M Specification for Castings, Iron-Chromium-Nickel, Corrosion Resistant, for Severe Service

A 747/A 747M Specification for Steel Castings, Stainless, Precipitation Hardening

A 751 Test Methods, Practices, and Terminology for Chemical Analysis of Steel Products

A 800/A 800M Practice for Steel Casting, Austenitic Alloy, Estimating Ferrite Content Thereof

A 890/A 890M Specification for Castings, Iron-Chromium-Nickel-Molybdenum Corrosion-Resistant, Duplex (Austenitic/Ferritic) for General Application

A 903/A 903M Specification for Steel Castings, Surface Acceptance Standards, Magnetic Particle and Liquid Penetrant Inspection

A 915/A 915M Specification for Steel Castings, Carbon, and Alloy, Chemical Requirements Similar to Standard Wrought Grades

A 941 Terminology Relating to Steel, Stainless Steel, Related Alloys, and Ferroalloys

A 991/A 991M Test Method for Conducting Temperature Uniformity Surveys of Furnaces Used to Heat Treat Steel Products

A 997 Practice for Investment Castings, Surface Acceptance Standards, Visual Examination

E 29 Practice for Using Significant Digits in Test Data to Determine Conformance with Specifications

E 94 Guide for Radiographic Examination

E 125 Reference Photographs for Magnetic Particle Indications on Ferrous Castings

E 165 Test Method for Liquid Penetrant Examination

E 186 Reference Radiographs for Heavy-Walled (2 to 4 ½ in. [51 to 114-mm]) Steel Castings

E 192 Reference Radiographs of Investment Steel Castings for Aerospace Applications

E 280 Reference Radiographs for Heavy-Walled (4 ½ to 12-in. [114 to 305-mm]) Steel Castings

E 353 Test Methods for Chemical Analysis of Stainless, Heat-Resisting, Maraging, and Other Similar Chromium-Nickel-Iron Alloys

E 354 Test Methods for Chemical Analysis of High-Temperature, Electrical, Magnetic, and Other Similar Iron, Nickel, and Cobalt Alloys

E 446 Reference Radiographs for Steel Castings Up to 2 in. [51 mm] in Thickness

E 709 Guide for Magnetic Particle Examination

2.2 *SAE Aerospace Recommended Practice:*[3]

ARP 1341 Determining Decarburization and Carburization in Finished Parts of Carbon and Low-Alloy Steel

3. Terminology

3.1 *Definitions*—The definitions in Test Methods and Definitions A 370, Test Methods, Practices, and Terminology A 751, and Terminology A 941 are applicable to this specification and to those listed in 1.1.

3.2 *Definitions of Terms Specific to This Standard:*

3.2.1 *investment casting*, *n*—a metal casting that is produced in a mold obtained by investing (surrounding) an expendable pattern with a ceramic slurry that is allowed to solidify. The expendable pattern may consist of wax, plastic, or other material and is removed prior to filling the mold with liquid metal.

3.2.2 *master heat*, *n*—a quantity of metal processed in a single furnace or refining vessel at one time in such a manner as to produce the desired composition and properties.

3.2.3 *sub-heat*, *n*—a portion of a master heat remelted without additional processing for pouring into castings. Synonyms: melt, production heat.

4. Materials and Manufacture

4.1 *Melting Process*—Master heats shall be made by the electric furnace process with or without separate refining such as argon-oxygen-decarburization (AOD), vacuum-oxygen-degassing (VOD), vacuum-induction-melting (VIM), and so forth, unless otherwise specified in the individual specification or agreed upon between the customer and producer. Master heats may be used directly for producing castings or converted into ingot, bar, shot, or other suitable form, not including gates and risers from casting production, for later remelting as a sub-heat.

4.2 *Re-Melting Process*—Sub-heats shall be produced from master heat metal in suitable batch sizes by electric induction furnace with or without atmosphere protection such as vacuum or inert gas unless otherwise specified in the individual specification or agreed upon between the customer and producer. Revert (gates, sprues, risers, and rejected castings) shall not be re-melted except in master heats.

4.3 *Sampling*:

4.3.1 If castings are poured directly from one or more master heats, then the samples for chemical and other required testing shall also be poured directly from each of the master heats.

4.3.2 If castings are poured from a sub-heat, then the samples for chemical and other required testing shall also be poured from a sub-heat of that same master heat, but not necessarily from the same sub-heat as the castings. The

[3] Available from Society of Automotive Engineers (SAE), 400 Commonwealth Dr., Warrendale, PA 15096-0001, http://www.sae.org.

Copyright ASTM International
Provided by IHS under license with ASTM
No reproduction or networking permitted without license from IHS
Not for Resale

sub-heat used for the test samples shall be produced using the same practices and additions as used for the castings.

4.3.3 Unless otherwise specified by the purchaser, test specimens may be taken from castings or from coupons cast integrally with the castings, in the same molds as the castings, or in separate molds.

4.4 *Heat Treatment*:

4.4.1 Castings shall be heat treated in the working zone of a furnace that has been surveyed in accordance with Test Method A 991/A 991M.

4.4.2 When castings are heat treated at temperatures above 2000°F (1100°C), then the working zone shall have been established by a survey performed at not more than 25°F (15°C) below nor more than 200°F (110°C) above the minimum heat treatment temperature specified for the grade. If a minimum heat treatment temperature is not specified for the grade, then the survey temperature shall be not more than 50°F (30°C) below nor more than 175°F (100°C) above the furnace set point used.

4.4.3 The maximum variation in measured temperature as determined by the difference between the highest temperature and the lowest temperature shall be as agreed between the purchaser and producer except that during production heat treatment, no portion of the furnace shall be below the minimum specified temperature nor above the maximum specified temperature for the grade being processed.

5. Chemical Composition

5.1 *Chemical Analysis*—Chemical analysis of materials covered by this specification shall be in accordance with Test Methods, Practices, and Terminology A 751.

5.2 *Heat Analysis*—An analysis of samples obtained in accordance with 4.3 or Supplementary Requirement S17 as appropriate, shall be made by the manufacturer to determine the percentages of the elements specified in the individual specification for the grade being poured. When drillings are used, they shall be taken not less than 1/16 in. [1.6 mm] beneath the surface. The chemical composition thus determined shall conform to the requirements in the individual specification for the grade being poured.

5.3 *Product Analysis*—A product analysis may be made by the purchaser from material representing each master heat, sub-heat, lot, or casting. The analysis shall be made on representative material. Samples for carbon analysis of carbon and alloy steel shall be taken no closer than 1/16 in. [1.6 mm] to a cast surface, except that castings too thin for this shall be analyzed on representative material. The chemical composition thus determined shall meet the requirements specified in the applicable specification for the grade involved, or shall be subject to rejection by the purchaser, except that the chemical composition determined for carbon and low alloy steel castings may vary from the specified limits by the amounts shown in Table 1. The product analysis tolerances of Table 1 are not applicable as acceptance criteria for heat analysis by the casting manufacturer. When comparing product and heat analysis for other than carbon and low alloy steels, the reproducibility Data R2, in Test Methods E 353 or E 354, as applicable, shall be taken into consideration.

TABLE 1 Product Analysis Tolerances

Element	Range, %[A]	Tolerances[B,C] Over Maximum or Under Minimum Limit, %
C	up to 0.65	0.03 × % C_L + 0.02
	above 0.65	0.04
Mn	up to 1	0.08 × % Mn_L + 0.01
	above 1	0.09
Si	up to 0.60	0.22 × % Si_L – 0.01
	above 0.60	0.15
P	all	0.13 × % P_L + 0.005
S	all	0.36 × % S_L + 0.001
Ni	up to 2	0.10 × % Ni_L + 0.03
	above 2	0.25
Cr	up to 2	0.07 × % Cr_L + 0.04
	above 2	0.18
Mo	up to 0.6	0.04 × % Mo_L + 0.03
	above 0.6	0.06
V	up to 0.25	0.23 × % V_L + 0.004
	above 0.25	0.06
W	up to 0.10	0.08 × % W_L + 0.02
	above 0.10	0.02
Cu	up to 0.15	0.18 × % Cu_L + 0.02
	above 0.15	0.05
Al	up to 0.10	0.08 × % Al_L + 0.02
	above 0.10	0.03

[A] The range denotes the composition limits up to which tolerances are computed by the equation, and above which the tolerances are given by a constant.

[B] The subscript L for the elements in each equation indicates that the limits of the element specified by the applicable specification are to be inserted into the equation to calculate the tolerance for the upper limit and the lower limit (if applicable), respectively. Examples of computing tolerances are presented in footnote C.

[C] To illustrate the computation of the tolerance, consider the manganese maximum of 0.70 for an 0.30 carbon grade 65-35 in Specification A 27/A 27M. The maximum permissible deviation is (0.08 × 0.70 + 0.01) = 0.066. Therefore, the highest acceptable product analysis is 0.766. Similarly, for an 0.20 carbon grade 70-40 in Specification A 27/A 27M, the maximum manganese content is 1.40; thus, the highest acceptable product analysis is (1.40 + 0.09) = 1.49.

5.4 *Unspecified Elements*—When chemical analysis for elements not specified for the grade ordered is desired, Supplementary Requirement S13 may be specified.

NOTE 1—All commercial metals contain small amounts of various elements in addition to those that are specified. It is neither practical nor necessary to specify limits for every unspecified element that might be present, despite the fact that the presence of many of these elements is often routinely determined by the producer.

5.5 The substitution of a grade or composition different from that specified by the purchaser is prohibited.

6. Mechanical Requirements

6.1 The individual product specifications vary as to whether mechanical tests are required; for this reason, and to determine specific test requirements, the individual product specification should be reviewed. If mechanical testing is required by the product specification, sampling shall be in accordance with 4.3 or with Supplementary Requirement S18 as appropriate.

6.2 Unless otherwise specified by the purchaser, when mechanical properties are required by the product specification, test coupons may be taken from castings, may be cast integrally with the castings, or may be cast in separate molds of the same type and material as those used for the castings, in accordance with Fig. 1, Fig. 2, Fig. 3, or Fig. 4, except when Supplementary Requirement S15 is specified. The test coupon

Copyright ASTM International
Provided by IHS under license with ASTM
No reproduction or networking permitted without license from IHS
Not for Resale

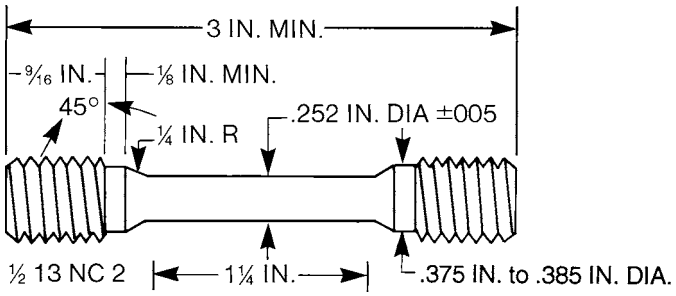

SI Equivalents

In.	[mm]
1/8 *	[3*]
1/4	[5]
.252 ± .005	[6.40 ± 0.15]
.375 to .385*	[9.50-9.75*]
9/16 *	[15*]
1¼	[30]
3*	[75*]
½ 13 NC 2*	[as needed to fit machine]

*Suggested dimension

FIG. 1 Design and Dimensions of the ICI Test Bar

in Fig. 4 shall be employed only for austenitic alloy castings with cross sections less than 2½ in.[65 mm].[4]

6.3 The coupon from which the test specimen is taken shall be heat treated in production furnaces to the same procedure as the castings it represents.

6.4 The specimens may be cast to shape or machined from coupons to dimensions in accordance with Test Methods and Definitions A 370 or the ICI bar shown in Fig. 1.

6.5 If any specimen shows defective machining or develops flaws, it may be discarded and another substituted from the same master heat.

6.6 To determine conformance with the tension test requirements, an observed value or calculated value shall be rounded off in accordance with Practice E 29 to the nearest 500 psi [5 MPa] for yield and tensile strength and to the nearest 1 % for elongation and reduction of area.

7. Workmanship, Finish, and Appearance

7.1 All castings shall be made in a workmanlike manner and shall conform to the dimensions on drawings furnished by the purchaser before manufacture is started. If the pattern is supplied by the purchaser or is produced using a die supplied by the purchaser, the dimensions of the casting shall be as predicated by the pattern or die.

8. Quality

8.1 The surface of the casting shall be free of adhering ceramic, scale, cracks, and hot tears as determined by visual examination. Other surface discontinuities shall meet the visual acceptance standards specified in the order. Practice A 997 or other visual standards may be used to define acceptable surface discontinuities and finish. Unacceptable visual surface discontinuities shall be removed and their removal verified by visual examination of the resultant cavities.

8.2 When additional inspection is desired, Supplementary Requirements S1, S2, S3, S4, or S5 may be specified.

9. Repair

9.1 Repair by welding shall be in accordance with the requirements of the individual specification using procedures and welders qualified in accordance with Practice A 488/A 488M.

10. Inspection

10.1 The manufacturer shall afford the purchaser's inspector all reasonable facilities necessary to satisfy that the material is being produced and furnished in accordance with the applicable specification. Foundry inspection by the purchaser shall not interfere unnecessarily with the manufacturer's operations. All tests and inspections, with the exception of product analysis (5.3), are the responsibility of the manufacturer.

11. Rejection

11.1 Subsequent to acceptance at the manufacturer's works, material that is found to be unacceptable as determined by requirements specified in the order may be rejected by the purchaser. The manufacturer should be notified of such rejection. If the manufacturer is dissatisfied with the results of any tests performed by the purchaser, he may make claim for a rehearing.

12. Keywords

12.1 casting; investment casting; master heat; steel; sub-heat

[4] Information on the relationship of mechanical properties determined on test coupons obtained as specified in 6.2 with those obtained from the casting may be found in "The Steel Casting Handbook," Fifth Edition, Steel Founders' Society of America, 1980, pp. 15–35 through 15–43.

Copyright ASTM International
Provided by IHS under license with ASTM
No reproduction or networking permitted without license from IHS
Not for Resale

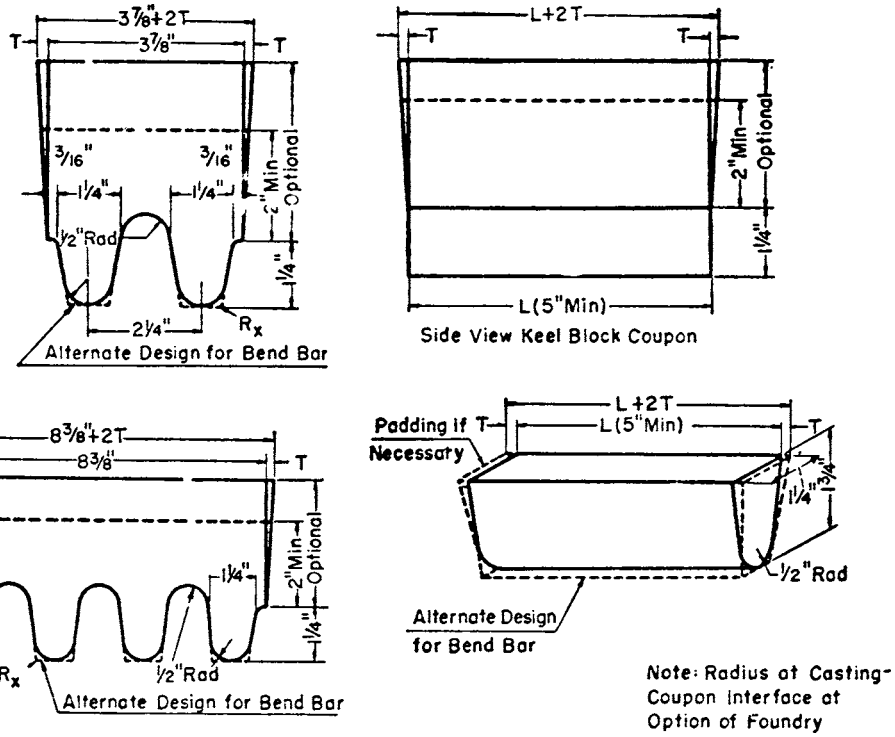

Metric Equivalents									
in.	3/16	½	1¼	1¾	2	2¼	3⅞	5	8⅜
[mm]	[4.8]	[13]	[32]	[45]	[51]	[57]	[98]	[127]	[213]

	Leg Design [125 mm]		Riser Design	
1.	*L* (length)	A 5 in. [125 mm] minimum length will be used. This length may be increased at the option of the foundry to accommodate additional test specimens (see Note 1).	1. *L* (length)	The length of the riser at the base will be the same as the top length of the leg. The length of the riser at the top therefore depends on the amount of taper added to the riser.
2.	End Taper	Use of and size of end taper is at the option of the foundry.	2. Width	The width of the riser at the base of a multiple-leg coupon shall be *n* (2¼) [57 mm] - ⅝ [16 mm] where *n* equals the number of legs attached to the coupon. The width of the riser at the top is therefore dependent on the amount of taper added to the riser.
3.	Height	1¼ in. [32 mm]		
4.	Width (at top)	1¼ [32 mm] (see Note 1).		
5.	Radius (at bottom)	½ in. [13 mm], max		
6.	Spacing between legs	A ½-in. [13-mm] radius will be used between the legs.	3. *T* (riser taper) Height	Use of and size is at the option of the foundry. The minimum height of the riser shall be 2 in. [51 mm]. The maximum height is at the option of the foundry for the following reasons: (*a*) many risers are cast open, (*b*) different compositions may require variation in risering for soundness, and (*c*) different pouring temperatures may require variation in risering for soundness.
7.	Location of test specimens	The tensile, bend, and impact specimens will be taken from the lower portion of the leg (see Note 2).		
8.	Number of legs	The number of legs is at the option of the foundry providing they are equi-spaced according to Item 6.		
9.	R_s	Radius from 0 to approximately 1/16 in. [2 mm].		

NOTE 1—*Test Coupons for Large and Heavy Steel Castings*—The test coupons in Fig. 2 are to be used for large and heavy steel castings. However, at the option of the foundry the cross-sectional area and length of the standard coupon may be increased as desired.

NOTE 2—*Bend Bar*—If a bend bar is required, an alternate design (as shown by dotted lines in Fig. 2) is indicated.

FIG. 2 Test Coupons for Castings with Details of Design

Copyright ASTM International
Provided by IHS under license with ASTM
No reproduction or networking permitted without license from IHS
Not for Resale

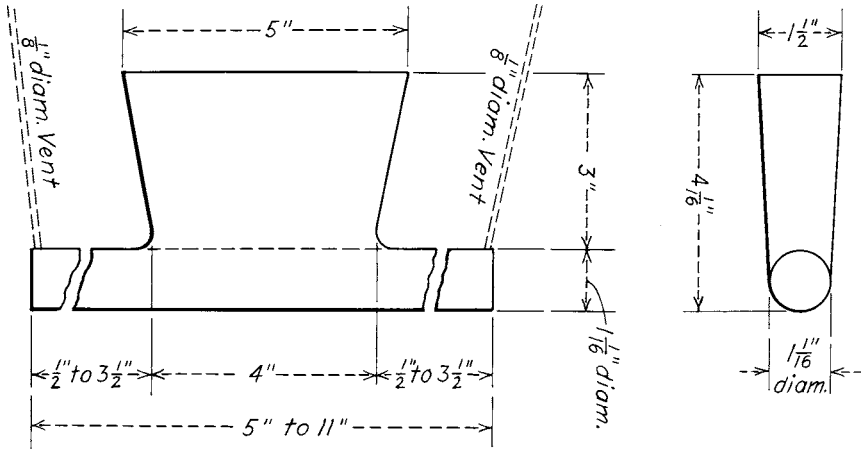

Metric Equivalents

in.	[mm]	in.	[mm]
⅛	[3.2]	3½	[88.9]
½	[12.7]	4	[101.6]
1 1⁄16	[27.0]	4 1⁄16	[103.2]
1½	[38.1]	5	[127.0]
3	[76.2]	11	[279.4]

NOTE—Pour through head; cover molten head with powdered charcoal, coke dust, and so forth, immediately after pouring, in order to keep head fluid as long as possible.

FIG. 3 Test Block for Tension Test Specimen

Copyright ASTM International
Provided by IHS under license with ASTM
No reproduction or networking permitted without license from IHS
Not for Resale

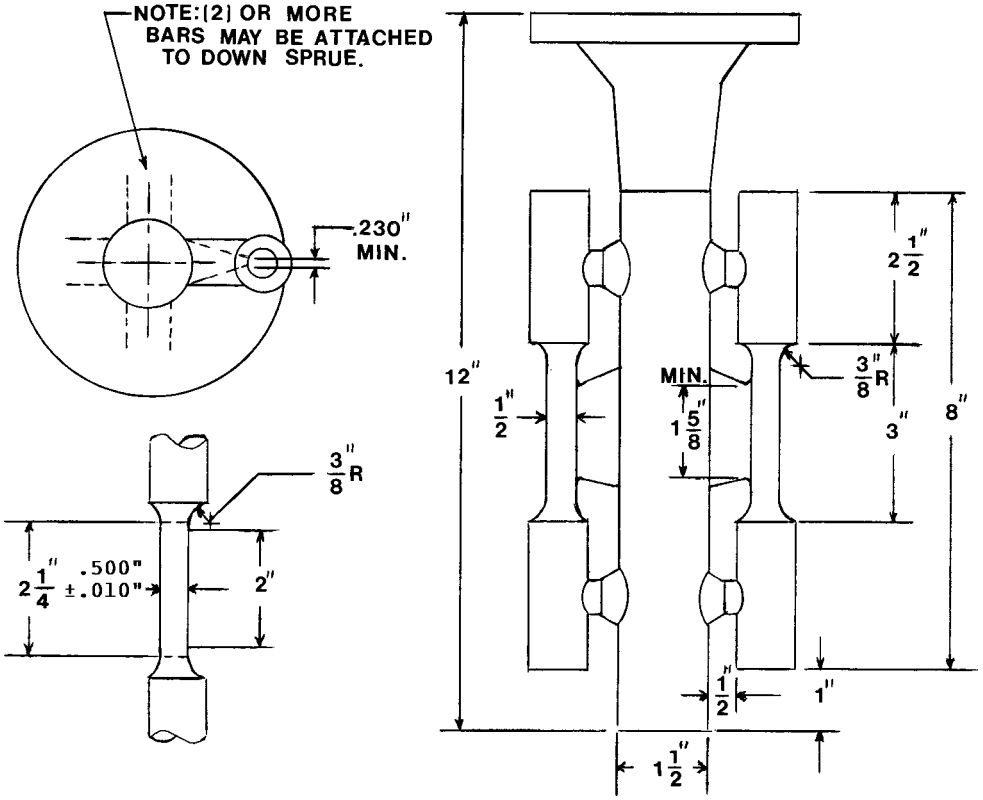

SI Equivalents

In.	[mm]
.230*	[5.842*]
⅜	[9.525]
½ *	[12.7*]
.500 ± .010	[12.5 ± 0.25]
1*	[25.4*]
1 ½ *	[38.1*]
1⅝ *	[41.275*]
2¼	[57.15]
2½ *	[63.5*]
3*	[76.2*]
8*	[203.2*]
12*	[304.8*]

*Suggested dimension

NOTE—Coupons produced in this manner are suitable for austenitic alloys only. The mold may be preheated for pouring to produce a sound coupon.

FIG. 4 Cast-To-Shape Test Coupon for Tension Specimen

SUPPLEMENTARY REQUIREMENTS

Supplementary requirements shall be applied only when specified by the purchaser. Details of the supplementary requirements shall be agreed upon between the manufacturer and purchaser. The specified tests shall be performed by the manufacturer prior to shipment of the castings.

S1. Magnetic Particle Examination

S1.1 Castings shall be examined for surface and near-surface discontinuities by magnetic particle examination. The examination shall be in accordance with Practice E 709. The extent of examination and the basis for acceptance shall be agreed upon between the manufacturer and the purchaser. Specification A 903/A 903M may be used as a basis for such agreement.

S2. Radiographic Examination

S2.1 Castings shall be examined for internal defects by means of X-rays or gamma rays. The procedure shall be in accordance with Guide E 94, and types and degrees of discontinuities considered shall be judged by Reference Radiographs E 186, E 192, E 280, or E 446. Extent of examination and basis for examination shall be agreed upon between the manufacturer and purchaser.

Copyright ASTM International
Provided by IHS under license with ASTM
No reproduction or networking permitted without license from IHS
Not for Resale

S3. Liquid Penetrant Examination

S3.1 Castings shall be examined for surface discontinuities by means of liquid penetrant examination. The examination shall be in accordance with Practice E 165. Areas to be inspected, methods and types of liquid penetrants to be used, developing procedure, and basis for acceptance shall be agreed upon between the manufacturer and purchaser. Specification A 903/A 903M may be used as a basis for such agreement.

S4. Ultrasonic Examination

S4.1 Castings shall be examined for internal defects by means of ultrasonic examination. The examination procedure shall be in accordance with Practice A 609/A 609M. Extent of examination, methods of testing, and basis for acceptance shall be agreed upon between the manufacturer and purchaser.

S5. Examination of Weld Preparation

S5.1 Magnetic particle or liquid penetrant examination of cavities prepared for welding shall be performed to verify removal of those discontinuities found unacceptable by the examination method specified for the casting. Unless other degrees of shrinkage or types of discontinuities found in the cavities are specified, Type II, Internal Shrinkage, of Reference Photographs E 125, of Degree 2 in sections up to 2 in. [50 mm] thick and of Degree 3 in sections over 2 in. [50 mm] thick shall be acceptable.

S6. Certification

S6.1 The manufacturer's certification shall be furnished to the purchaser stating that the material was manufactured, sampled, tested, and inspected in accordance with the material specification (including year date) and was found to meet the requirements.

S7. Prior Approval of Major Weld Repairs

S7.1 Major weld repairs as defined and agreed upon between the manufacturer and purchaser shall be subject to the prior approval of the purchaser.

S8. Marking

S8.1 The castings shall be marked for identification or traceability, or both. The content of the marking and the method of marking, including size, location, and style, shall be as agreed upon between the purchaser and the producer.

S9. Charpy Impact Test

S9.1 Charpy impact test properties shall be determined from a set of three Charpy V-notch specimens made from a test coupon in accordance with Test Methods and Definitions A 370, and tested at a test temperature agreed upon between the manufacturer and the purchaser. The sampling requirements shall be agreed upon between the manufacturer and purchaser (see 4.3). The acceptance requirements shall be energy absorbed, lateral expansion, or percent shear area, or any combination thereof, and shall be that agreed upon between the manufacturer and purchaser. Test specimens shall be prepared and tested in accordance with Test Methods and Definitions A 370.

S9.2 *Absorbed Energy*—Average energy value of three specimens shall be not less than specified, with not more than one value permitted to fall below the minimum specified and no value permitted below the minimum specified for a single specimen.

S9.3 *Lateral Expansion*—Lateral expansion value shall be agreed upon between the manufacturer and purchaser.

S9.4 *Percent Shear Area*—Percent shear area shall be agreed upon between the manufacturer and purchaser.

S10. Hardness Test

S10.1 Hardness measurements at specified locations on the castings shall be made in accordance with Test Methods and Definitions A 370 and reported.

S11. Specified Ferrite Range

S11.1 The chemical composition of the heat shall be controlled such that the ferrite content, as determined by the chemical composition procedure of Practice A 800/A 800M shall be in conformance with the specified ferrite content range.

S11.2 The specified ferrite content shall be as agreed upon between the manufacturer and the purchaser. If both minimum and maximum ferrite contents are specified, the minimum specified ferrite content range shall be 10 %. The minimum specified ferrite content shall be no lower than the percent necessary to achieve the minimum mechanical properties required for the alloy.

S11.3 Should the purchaser wish to have the ferrite content determined by either the magnetic response or metallographic methods, the purchaser should impose Supplementary Requirement S1 or S2 of Practice A 800/A 800M.

S12. Test Report

S12.1 The manufacturer shall supply a test report to the purchaser giving the results of all tests required to be performed, including chemical analysis.

S13. Unspecified Elements

S13.1 Chemical analysis and limits for elements not specified for the grade ordered shall be as agreed upon between the manufacturer and purchaser.

S14. Tension Test from Castings

S14.1 In addition to the tension test required by the material specification, test material shall be cut from the casting. The mechanical properties and location for the test material shall be agreed upon between the manufacturer and purchaser.

S15. Alternate Mechanical Test Coupons and Specimen Locations for Castings (in lieu of Test Bars Poured from Special Coupons)

S15.1 Test coupons may be cast integrally with the mold in which the castings are produced or in separate molds. Test coupons shall be heat treated together with the castings they represent.

S15.2 The dimensions of the test coupon, the number and locations of the specimens, and the limits for the mechanical properties shall be agreed upon between the manufacturer and purchaser.

Copyright ASTM International
Provided by IHS under license with ASTM
No reproduction or networking permitted without license from IHS
Not for Resale

S16. Weld Repair Charts

S16.1 Weld repairs made to correct leakage on hydrostatic testing, or weld repairs for which the depth of the cavity required for welding exceeds 20 % of the actual wall thickness or 1 in. [25 mm], whichever is smaller, or weld repairs for which the area of the cavity required for welding exceeds approximately 10 $in.^2$ [65 mm^2] shall be documented.

S16.2 Weld repairs requiring documentation shall be documented on sketches or photographs, or both. The sketches or photographs shall show the location and major dimensions of cavities prepared for weld repair. The weld repair documentation shall be submitted to the purchaser at the completion of the order.

S17. Increased Testing Frequency—Chemical Analysis

S17.1 Frequency of chemical analysis shall be as agreed upon between the purchaser and manufacturer.

S18. Increased Testing Frequency—Tensile Testing

S18.1 Frequency of tension tests shall be as agreed upon between the purchaser and manufacturer.

S19. Decarburization

S19.1 A representative casting or coupon shall be evaluated for total or complete decarburization, or both, in accordance with ARP 1341.

S19.2 The basis for acceptance shall be agreed upon between the purchaser and manufacturer. An example of an acceptance specification is: zero total decarburization and no more than 0.020 in. partial decarburization.

S20. Metallurgical Cleanliness

S20.1 After polishing, each casting shall be visually inspected for nonmetallic inclusions and porosity.

S20.2 The details of the method for inspection and the basis for acceptance shall be agreed upon between the purchaser and manufacturer.

S20.3 It is realized that the foundry may be unable to perform the inspection for metallurgical cleanliness prior to shipment, or that the purchaser may wish to defer inspection until after additional work or machining has been performed on the casting. However, the foundry is responsible for the satisfactory performance of the castings under the final inspection required in S20.1.

S21. Hot Isostatic Pressing (HIPing)

S21.1 Castings shall be processed by Hot Isostatic Pressing (HIPing). Unless specified by the purchaser in the purchase order or contract, the HIPing time, temperature, pressure, and other parameters shall be at the discretion of the producer.

SUMMARY OF CHANGES

Committee A01 has identified the location of selected changes to this standard since the last issue (A 957 – 06) that may impact the use of this standard. (Approved March 1, 2008.)

(*1*) Added SI equivalents in the text, tables, and figures where they did not already exist.

(*2*) Designated certain dimensions in Fig. 1 and Fig. 4 as "suggested."

ASTM International takes no position respecting the validity of any patent rights asserted in connection with any item mentioned in this standard. Users of this standard are expressly advised that determination of the validity of any such patent rights, and the risk of infringement of such rights, are entirely their own responsibility.

This standard is subject to revision at any time by the responsible technical committee and must be reviewed every five years and if not revised, either reapproved or withdrawn. Your comments are invited either for revision of this standard or for additional standards and should be addressed to ASTM International Headquarters. Your comments will receive careful consideration at a meeting of the responsible technical committee, which you may attend. If you feel that your comments have not received a fair hearing you should make your views known to the ASTM Committee on Standards, at the address shown below.

This standard is copyrighted by ASTM International, 100 Barr Harbor Drive, PO Box C700, West Conshohocken, PA 19428-2959, United States. Individual reprints (single or multiple copies) of this standard may be obtained by contacting ASTM at the above address or at 610-832-9585 (phone), 610-832-9555 (fax), or service@astm.org (e-mail); or through the ASTM website (www.astm.org).

Copyright ASTM International
Provided by IHS under license with ASTM
No reproduction or networking permitted without license from IHS
Not for Resale