Designation: A 944 – 05

Standard Test Method for Comparing Bond Strength of Steel Reinforcing Bars to Concrete Using Beam-End Specimens[1]

This standard is issued under the fixed designation A 944; the number immediately following the designation indicates the year of original adoption or, in the case of revision, the year of last revision. A number in parentheses indicates the year of last reapproval. A superscript epsilon (ε) indicates an editorial change since the last revision or reapproval.

1. Scope*

1.1 This test method describes procedures to establish the relative bond strength of steel reinforcing bars in concrete.

1.2 This test method is intended to determine the effects of surface preparation or condition (such as bar coatings) on the bond strength of deformed steel reinforcing bars (of sizes ranging from No. 10 to No. 36 [No. 3 to No. 11]) to concrete.

1.3 The bond strengths obtained using this test method are not directly applicable to the design of reinforced concrete members.

NOTE 1—The bond strengths obtained using this test method are generally higher than obtained in development or splice tests using beams with the same embedment lengths. The results obtained using this test method should only be used for comparisons with results for other reinforcing bars tested using this method.

1.4 The values stated in SI units are to be regarded as the standard. The values given in brackets are for information only.

1.5 *This standard does not purport to address all of the safety concerns, if any, associated with its use. It is the responsibility of the user of this standard to establish appropriate safety and health practices and determine the applicability of regulatory limitations prior to use.*

2. Referenced Documents

2.1 *ASTM Standards:* [2]

A 775/A 775M Specification for Epoxy-Coated Steel Reinforcing Bars

C 192/C 192M Practice for Making and Curing Concrete Test Specimens in the Laboratory

E 4 Practices for Force Verification of Testing Machines

E 575 Practice for Reporting Data from Structural Tests of Building Constructions, Elements, Connections, and Assemblies

3. Terminology

3.1 *Definitions of Terms Specific to This Standard:*

3.1.1 *bond strength*, *n*—maximum measured load in a tensile bond test of a steel reinforcing bar.

3.1.2 *bonded length*, *n*—the length of the test bar that is in contact with concrete.

3.1.3 *concrete cover*, *n*—minimum distance between the surface of the test bar and the top or bottom of the test specimen.

3.1.4 *embedment length*, *n*—the distance from the surface of the concrete test specimen to the installed end of the steel reinforcing bar. This equals the sum of the lead length and the bonded length.

3.1.5 *lead length*, *n*—the length of the test bar that is not in contact with concrete but is between the surface of the concrete test specimen and the bonded length.

3.1.6 *relative rib area*, *n*—ratio of the projected rib area normal to bar axis to the product of the nominal bar perimeter and the center-to-center rib spacing.

3.2 *Symbols:*

C_b = Concrete cover, mm [in.].

d_b = Nominal diameter of reinforcing bar, mm [in.].

l_e = Embedment length, mm [in.].

4. Apparatus

4.1 *Equipment*—A schematic of a suitable testing system is shown in Fig. 1. The loading system shall be capable of measuring the forces to an accuracy within ±2 % of the applied load, when calibrated in accordance with Practices E 4. The test system shall have sufficient capacity to prevent yielding of its various components and shall ensure that the applied tensile load remains parallel to the axis of the steel reinforcing bar during testing.

4.2 *Compression Reaction Plate*—The compression reaction plate shall be placed a minimum clear distance equal to 0.9 l_e measured from the center of the test bar to the edge of the reaction plate.

4.3 *Bar Displacement Measurements*—Displacements of the loaded and free ends of the steel reinforcing bar shall be measured with respect to the loaded and free surfaces, respectively, of the concrete using suitable measurement devices. Dial gages having the smallest division of not more than 25 μm

[1] This test method is under the jurisdiction of ASTM Committee A01 on Steel, Stainless Steel, and Related Alloys and is the direct responsibility of Subcommittee A01.05 on Steel Reinforcement.

Current edition approved Oct. 1, 2005. Published October 2005. Originally approved in 1995. Last previous edition approved in 2004 as A 944 – 99 (2004).

[2] For referenced ASTM standards, visit the ASTM website, www.astm.org, or contact ASTM Customer Service at service@astm.org. For *Annual Book of ASTM Standards* volume information, refer to the standard's Document Summary page on the ASTM website.

***A Summary of Changes section appears at the end of this standard.**

Copyright © ASTM International, 100 Barr Harbor Drive, PO Box C700, West Conshohocken, PA 19428-2959, United States.

Copyright ASTM International
Reproduced by IHS under license with ASTM
No reproduction or networking permitted without license from IHS
Not for Resale
Reproduction authorized per License Agreement with Kathe Hooper (ASTMIHS Account); Mon Oct 17 15:00:58 EDT 2005

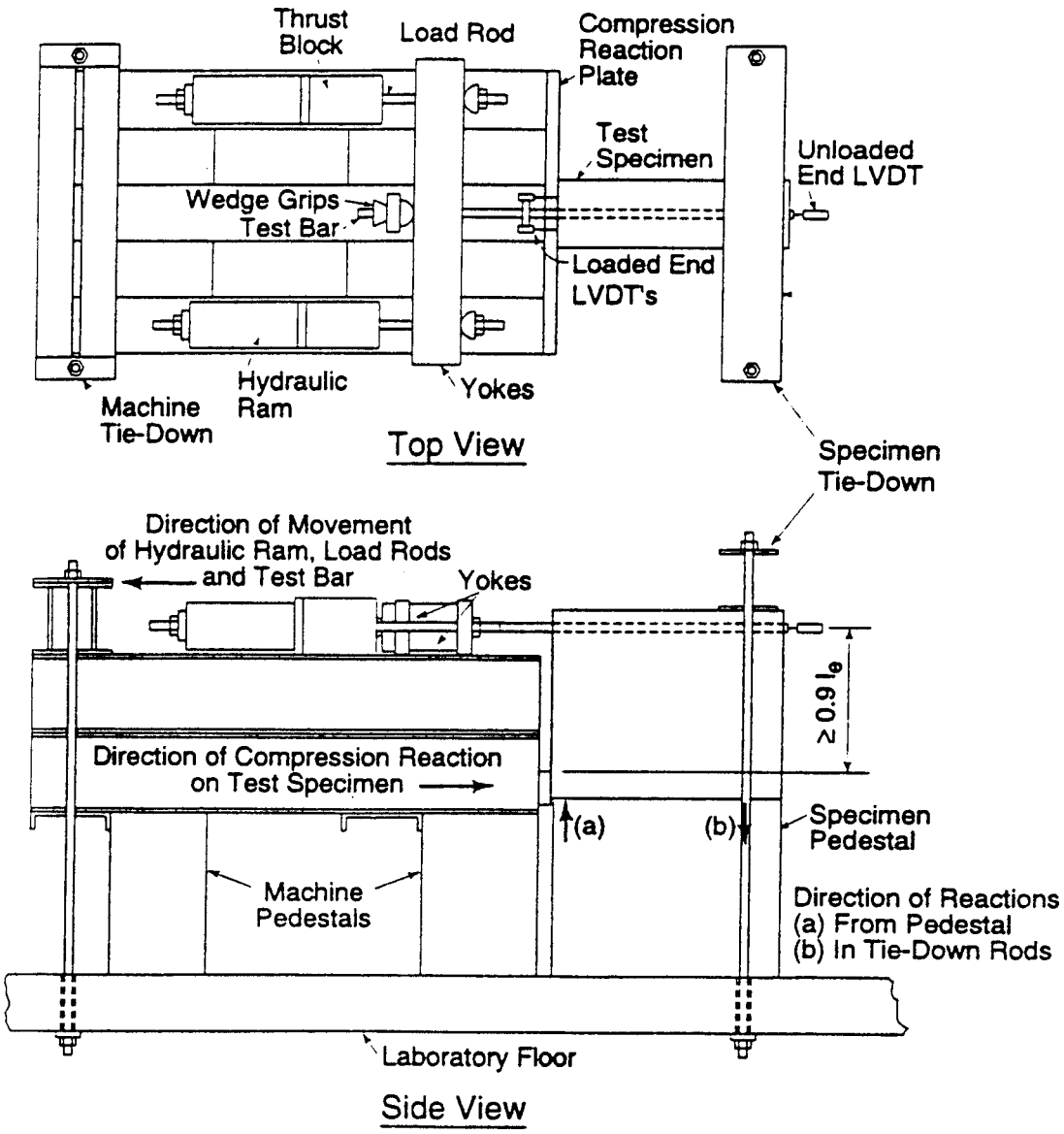

FIG. 1 Schematic of Test Apparatus

[0.001 in.] or linear variable differential transformers (LVDTs) with equal or superior accuracy are examples of satisfactory devices.

5. Test Specimen

5.1 *Beam-End Specimen*—The test specimen shall consist of the test bar cast in a block of reinforced concrete 600 ± 25 mm [24 ± 1 in.] long by d_b+ 200 ± 13 mm [d_b+ 8 ± ½ in.] wide by a minimum of d_b+ C_b+ l_e+ 60 mm [d_b+ C_b+ l_e+ 2½ in.] high. A typical test specimen is illustrated in Fig. 2. The specimen shall be reinforced by four closed stirrups oriented parallel to the sides of the specimen and two flexural steel reinforcing bars parallel to the test bar, as shown in Fig. 2. Transverse steel reinforcing bars similar to those illustrated in Fig. 2 may be used to aid in fabrication and testing. The test bar shall extend from the front surface a distance that is compatible with the test system. Two polyvinyl chloride (PVC) pipes shall be used as bond breakers to control the bonded length of the bar and to avoid a localized cone-type failure of the concrete at the loaded end of the specimen. The free end of the test bar shall butt against a hollow steel conduit or other device to provide access to the free end for measuring slip during the test. The closed stirrups shall be fabricated from Grade 420 [Grade 60] No. 10 [No. 3] bars for test bars up to and including No. 25 [No. 8] and No. 13 [No. 4] bars for test bars larger than No. 25 [No. 8]. The two flexural steel reinforcing bars shall be selected so as to provide a total area not less than that of the test bar.

NOTE 2—The lead length, shown in Fig. 2, is typically between 13 and 100 mm [0.5 and 4 in.]. This unbonded region is used to prevent a cone-type pullout failure at the surface of the concrete. Increases in lead length generally result in an increase in bond strength.

5.2 *Fabrication*—The concrete block shall be fabricated using concrete designed to produce a strength at the time of test between 31 and 38 MPa [4500 and 5500 psi]. The specimen shall be cast in approximately equal layers not exceeding 250

Copyright ASTM International
Reproduced by IHS under license with ASTM
No reproduction or networking permitted without license from IHS
by ASTM Int'l (all rights reserved);
Reproduction authorized per License Agreement with Kathe Hooper (ASTMIHS Account); Mon Oct 17 15:00:58 EDT 2005
Not for Resale

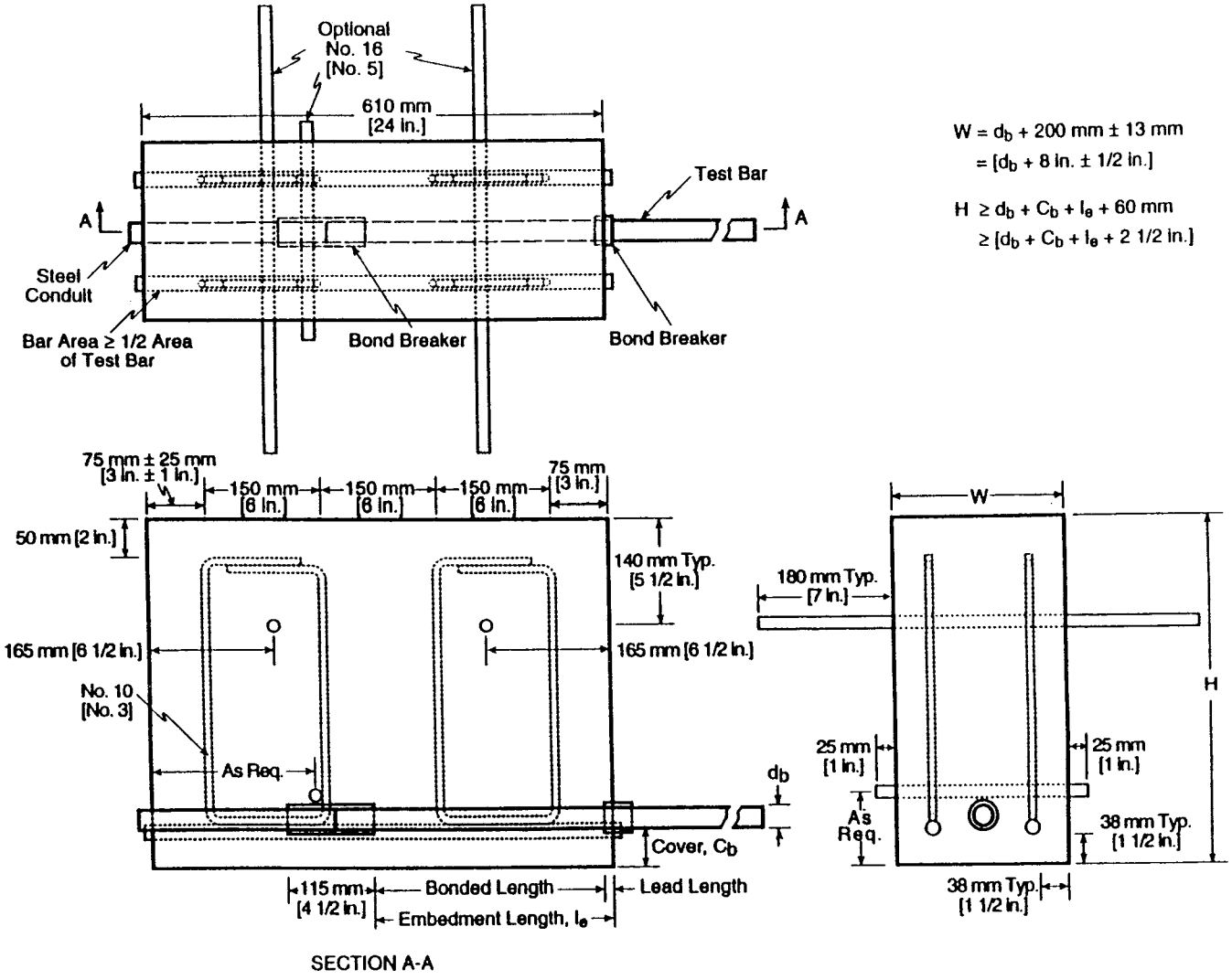

FIG. 2 Beam-End Test Specimens

mm [9 in.] in depth. Each layer shall be adequately consolidated with an internal vibrator to ensure removal of entrapped air.

NOTE 3—The nominal maximum size course aggregate should be less than or equal to ¾ of the minimum clear space between reinforcement or between reinforcement and the concrete surface of the beam-end specimen.

NOTE 4—The properties of concrete tend to vary, even for concrete from a single ready-mix truck. Therefore, the order of casting specimens should be selected to limit differences in bond strength caused by differences in concrete from different portions of the same batch. For example, when this test is used to evaluate the effect of epoxy coatings on bond strength, as required by Specification A 775/A 775M, specimens containing epoxy-coated bars and uncoated bars should be alternated during casting.

6. Conditioning

6.1 *Specimen Conditioning and Curing*—The test specimen shall be cured in the forms using a curing compound or a plastic membrane, or both, to prevent rapid evaporation of water until the concrete has attained a strength of at least 14 MPa [2000 psi]. Specimen conditioning and curing shall be such that the concrete strength shall be between 31 and 38 MPa [4500 and 5500 psi] at the time of test, unless another concrete strength is required. Standard concrete cylinders shall be prepared in accordance with Practice C 192 using a representative sample of the concrete used to make the test specimen. The concrete cylinders shall be cured adjacent to and in the same manner as the test specimen. A minimum of two test cylinders are required.

7. Procedure

7.1 A tensile load shall be applied to the test bar, as illustrated in Fig. 1. The loading rate shall be such that failure will not occur prior to 3 min after starting to load the test specimens. Data recorded for a test shall include, as a minimum, the initial load and displacement readings and the maximum load.

NOTE 5—The load rate should be between 10 to 33 % of the bond strength per min. At least 10 intermediate displacement and load readings should be taken.

Copyright ASTM International
Reproduced by IHS under license with ASTM
No reproduction or networking permitted without license from IHS
Not for Resale
Reproduction authorized per License Agreement with Kathe Hooper (ASTMIHS Account); Mon Oct 17 15:00:58 EDT 2005

8. Report

8.1 The report shall include the applicable information listed in Practice E 575, and shall specifically include the following:

8.1.1 Dates of test and report,

8.1.2 Test sponsor and agency,

8.1.3 Identification of the bars tested: size, grade, mean deformation height, mean deformation spacing, and, if required, the relative rib area,

8.1.4 Description of the steel reinforcing bar surface condition and coating (if used): manufacturer, trade name, and coating designation,

8.1.5 Description of the fabrication and testing procedures, if these deviated in any way from this test method,

8.1.6 Description of the concrete used, including mix design, aggregate type, compressive strength at the time of test (average of a minimum of two cylinders), and age of the concrete at the time of test,

8.1.7 Moisture condition of the concrete at the time of test: saturated surface dry, air dry,

8.1.8 Concrete cover, embedment length and lead length of the installed reinforcement, in mm [in.],

8.1.9 Description of the test method, loading procedure used, the displacements measured at each load step, and the actual rate of loading,

8.1.10 Individual maximum load value (bond strength), in N [lb], for each test specimen,

8.1.11 Photographs, sketches, word descriptions, or combinations thereof, of the failure modes observed, and

8.1.12 Summary of findings.

9. Precision and Bias

9.1 No statement is made on the precision or bias of this test method since the test results indicate only whether there is conformance to given criteria and since no generally accepted method for determining precision and bias of this test method is currently available. General guidelines provided herein for the specimens, instrumentation, and procedures make the results intractable to calculation of meaningful values by statistical analysis for precision and bias at this time.

10. Keywords

10.1 beam-end test; coatings; concrete bond; steel reinforcing bars

SUMMARY OF CHANGES

Committee A01 has identified the location of selected changes to this standard since the last issue (A 944 – 99 (2004) that may impact the use of this standard.

(1) Added section 1.3 , Note 1, and Note 4.

ASTM International takes no position respecting the validity of any patent rights asserted in connection with any item mentioned in this standard. Users of this standard are expressly advised that determination of the validity of any such patent rights, and the risk of infringement of such rights, are entirely their own responsibility.

This standard is subject to revision at any time by the responsible technical committee and must be reviewed every five years and if not revised, either reapproved or withdrawn. Your comments are invited either for revision of this standard or for additional standards and should be addressed to ASTM International Headquarters. Your comments will receive careful consideration at a meeting of the responsible technical committee, which you may attend. If you feel that your comments have not received a fair hearing you should make your views known to the ASTM Committee on Standards, at the address shown below.

This standard is copyrighted by ASTM International, 100 Barr Harbor Drive, PO Box C700, West Conshohocken, PA 19428-2959, United States. Individual reprints (single or multiple copies) of this standard may be obtained by contacting ASTM at the above address or at 610-832-9585 (phone), 610-832-9555 (fax), or service@astm.org (e-mail); or through the ASTM website (www.astm.org).

Copyright ASTM International
Reproduced by IHS under license with ASTM
No reproduction or networking permitted without license from IHS
Copyright by ASTM Int'l (all rights reserved);
Reproduction authorized per License Agreement with Kathe Hooper (ASTMIHS Account); Mon Oct 17 15:00:58 EDT 2005
Not for Resale