Designation: A 937/A 937M – 06

Standard Test Method for Determining Interlaminar Resistance of Insulating Coatings Using Two Adjacent Test Surfaces[1]

This standard is issued under the fixed designation A 937/A 937M; the number immediately following the designation indicates the year of original adoption or, in the case of revision, the year of last revision. A number in parentheses indicates the year of last reapproval. A superscript epsilon (ε) indicates an editorial change since the last revision or reapproval.

1. Scope

1.1 This test method covers a means of testing the interlaminar resistance of electrically insulating coatings as applied to adjacent laminations of flat-rolled electrical steel, under predetermined conditions of voltage, pressure and temperature. It indicates the effectiveness of surface coatings on electrical sheet steels for limiting interlaminar losses in electrical machinery. The interlaminar resistance is measured directly in units of resistance (kΩ).

1.2 This test method is particularly useful for, but not limited to, electrical steels coated with inorganic insulating coatings.

1.3 The values and equations stated in customary (cgs-emu and inch-pound) or SI units are to be regarded separately as standard. Within this standard, SI units are shown in brackets. The values stated in each system may not be exact equivalents; therefore, each system shall be used independently of the other. Combining values from the two systems may result in nonconformance with this standard.

1.4 *This standard does not purport to address all of the safety concerns, if any, associated with its use. It is the responsibility of the user of this standard to establish appropriate safety and health practices and determine the applicability of regulatory limitations prior to use.*

2. Referenced Documents

2.1 *ASTM Standards:* [2]

A 34/A 34M Practice for Sampling and Procurement Testing of Magnetic Materials

A 717/A 717M Test Method for Surface Insulation Resistivity of Single-Strip Specimens

A 718 Test Method for Surface Insulation Resistivity of Multi-Strip Specimens[3]

3. Terminology

3.1 *Definitions of Terms Specific to This Standard:*

3.1.1 *bad contact*—a contact which results in a voltage drop in excess of 0.6 V as described in 6.1.3.

3.1.2 *exposed test surface*—the insulating top surface of the top lamination or the insulating bottom surface of the bottom lamination of the test specimen.

3.1.3 *four-terminal measuring technique, often referred to as four-probe measuring technique*—a common method to measure resistance when a high degree of accuracy is required.[4] In this standard, the circuit configuration for this technique is referred to as a *four-probe configuration*. In the two-surface tester, this configuration features two probes connected to the top lamination test surface and two probes connected to the bottom lamination test surface. One of the probes in each pair carries the measuring current, and the other provides a contact for the voltage measurement. Because of the extremely high impedance of the measuring circuit, very little current flows through the voltage contacts, and thus very little voltage is produced across the contacts to influence the true reading, that is, any effect from contact resistance is avoided or reduced to a negligible amount. The two-surface tester has provision to check the integrity of the contacts made between the probes and the test surfaces.

3.1.4 *interlaminar resistance*—the average resistance of two adjacent insulating surfaces in contact with each other, under conditions specified in this standard.

3.1.5 *surface insulation resistivity—a*) the effective resistivity of a single insulating layer tested between applied bare metal contacts and the base metal of the insulated test specimen, as per Test Method A 717/A 717M; *b*) the resistance of a unit area per test strip calculated from a measurement of the electrical resistance of a stack of strips as per Test Method A 718.

3.1.6 *test specimen*—two electrical steel laminations, each having a minimum size of 25 × 25 cm [250 × 250 mm] and each having an electrically insulating coating on both sides. The two electrical steel laminations are placed one on top of the other for the interlaminar resistance measurement, Fig. 1.

[1] This test method is under the jurisdiction of ASTM Committee A06 on Magnetic Properties and is the direct responsibility of Subcommittee A06.01 on Test Methods.

Current edition approved Nov. 1, 2006. Published November 2006. Originally approved in 1995. Last previous edition approved in 2001 as A 937/A 937M – 01.

[2] For referenced ASTM standards, visit the ASTM website, www.astm.org, or contact ASTM Customer Service at service@astm.org. For *Annual Book of ASTM Standards* volume information, refer to the standard's Document Summary page on the ASTM website.

[3] Withdrawn.

[4] Harris, F. K., *Electrical Measurements*, Robert E. Krieger Publishing Company, Huntington, New York, 1975, pp. 220–224.

Copyright © ASTM International, 100 Barr Harbor Drive, PO Box C700, West Conshohocken, PA 19428-2959, United States.

Copyright ASTM International
Provided by IHS under license with ASTM
No reproduction or networking permitted without license from IHS
Not for Resale

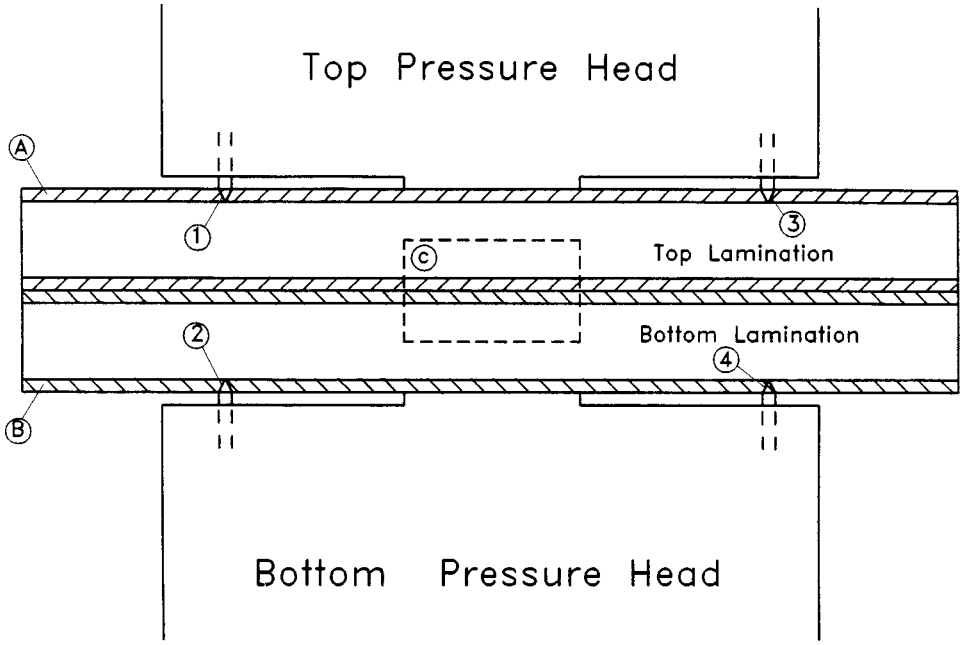

Exposed Test Surfaces: A and B
Insulating Coating Layers Under Test: C

Metallic Contacts Carrying Current: 1 and 2
Metallic Contacts Measuring Voltage: 3 and 4

Note: Contacts pierce insulating coating and contact substrate

FIG. 1 Schematic Illustration of Four-Probe Configuration

3.1.7 *two-surface tester*—the apparatus used in this test method.

4. Summary of Test Method

4.1 The test method measures the average resistance of two adjacent insulating surfaces. Intimate physical contact of these surfaces is achieved via test heads which force a defined surface area into contact under a specified pressure. For the interlaminar resistance measurement, electrical contact is established between the test specimen and a constant direct current source using metallic contacts (drill bits). The tester utilizes two sets of metallic contacts which penetrate the exposed test surfaces into the base metal, to form a four-probe configuration, Fig. 1. A continuous electrical path is formed between the contacts and constant current source when the metallic contacts penetrate through the coating on the exposed test surfaces to the underlying base metal, and the insulating surfaces are held in intimate contact by the test head. When current flows in the circuit, the dc voltage developed in the circuit may be easily measured by means of a digital voltmeter. A block diagram of the two-surface test system is illustrated in Fig. 2.

NOTE 1—The current range settings for the two-surface tester are 1-μA dc and 10-μA dc, thus enabling the resistance to be read directly from the voltmeter. The current select switch is designed to shift the decimal point appropriately so as to provide a resistance reading in units of kΩ.

5. Significance and Use

5.1 This test method is particularly suitable for quality control in the application of insulating coatings. This test method measures the interlaminar resistance of insulating coatings, as defined in 3.1.4. Interlaminar resistance is the measure of the insulating quality of the coating. Interlaminar resistance is reported in units of kΩ.

5.2 The interlaminar resistance determined in accordance with this test method is not the same quantity determined by Test Method A 717/A 717M or Test Method A 718.

5.3 This test method is particularly useful for electrical steels coated with inorganic insulating coatings having surface

Copyright ASTM International
Provided by IHS under license with ASTM
No reproduction or networking permitted without license from IHS
Not for Resale

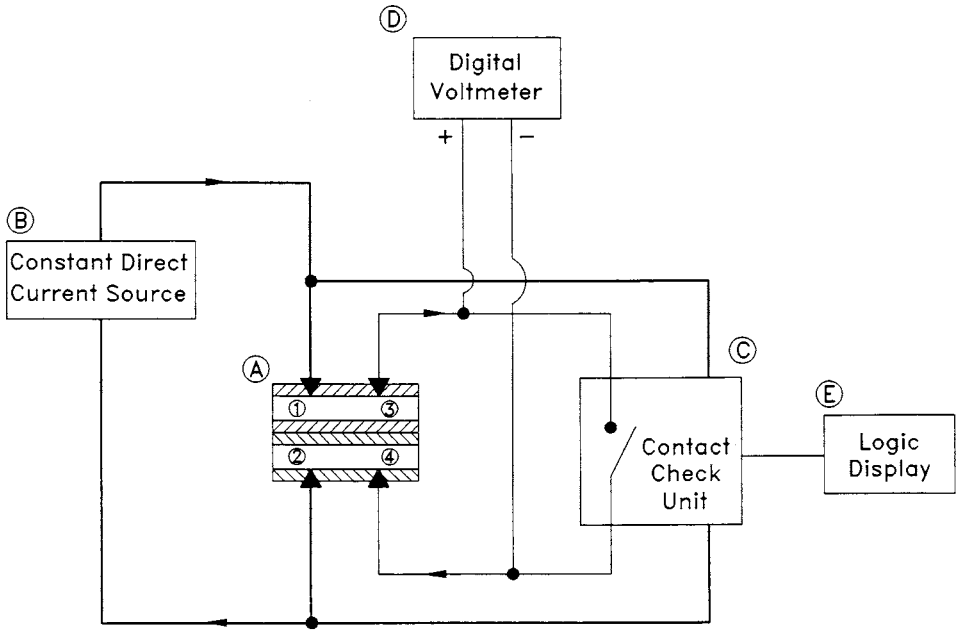

A Test Specimen and Measuring Probes in Four–Probe Configuration. (As shown in Figure 1)

B Constant Direct Current Source with Two Current Settings: 1 μA and 10 μA.

C Contact Check Unit: Circuit which verifies that contact resistance of test probes will not interfere with coating resistance measurement.

D Digital Voltmeter: Voltmeter measuring voltage drop through contacts or coating.

Calibration Module: The module is a set of precision resistors which substitutes known resistances for the purpose of calibration. (Not shown.)

FIG. 2 Block Diagram of Two-Surface Test System

insulation resistivities in excess of 0.3 kΩ·cm^2 [30 kΩ·mm^2] when tested using Test Method A 717/A 717M (a Franklin current less than 0.02 A). This test method can readily be extended to any range of insulation resistivity that the equipment comprising the two-surface tester allows. For the equipment specified herein, the maximum measurable resistance is 1200 kΩ for the 10-μA current setting and 12 000 kΩ for the 1-μA current setting; the maximum voltage for the test system is 12 V.

5.4 Repeat readings on the same set of two electrical steel laminations using different contact positions, as well as the testing of multiple laminations from the same lot of electrical steel, are recommended. Several readings are suggested because the coating thickness may vary across the surface of a given electrical steel lamination. Additionally, the coating thickness may vary across several laminations taken from the same lot of electrical steel. Such variations in coating thickness are likely to yield variations in the measured interlaminar resistance. The required number of readings depends on the nature of the coating and the accuracy required.

6. Apparatus

6.1 The two-surface tester measures the resistance between two laminations that are in intimate contact with one another as shown in Fig. 1. The two-surface tester shall consist of two pressure pads, each of which is mounted to one of the heads of a hydraulic or pneumatic press. The diameter of each pressure pad is 3.57 cm [35.7 mm], giving a nominal area of 10 cm^2 [1000 mm^2]. The diameter of the pressure head is 11.50 cm [115 mm]. Each pressure head circumscribes two metallic contacts (drill bits) which are used to make contact with the test specimen. A schematic diagram of the pressure head, pads and metallic contacts is shown in Fig. 3. Commercially available rollnut actuators, which convert rotary to linear motion, can be used to house and rotate the drill bit through the coating on the exposed surfaces of the test specimen, Fig. 4.

6.1.1 The associated measuring equipment, which may be remotely located, includes an electronic voltmeter with a digital readout, a source of constant current, a contact check unit, a calibration module and a display unit. A block diagram

Copyright ASTM International
Provided by IHS under license with ASTM
No reproduction or networking permitted without license from IHS
Not for Resale

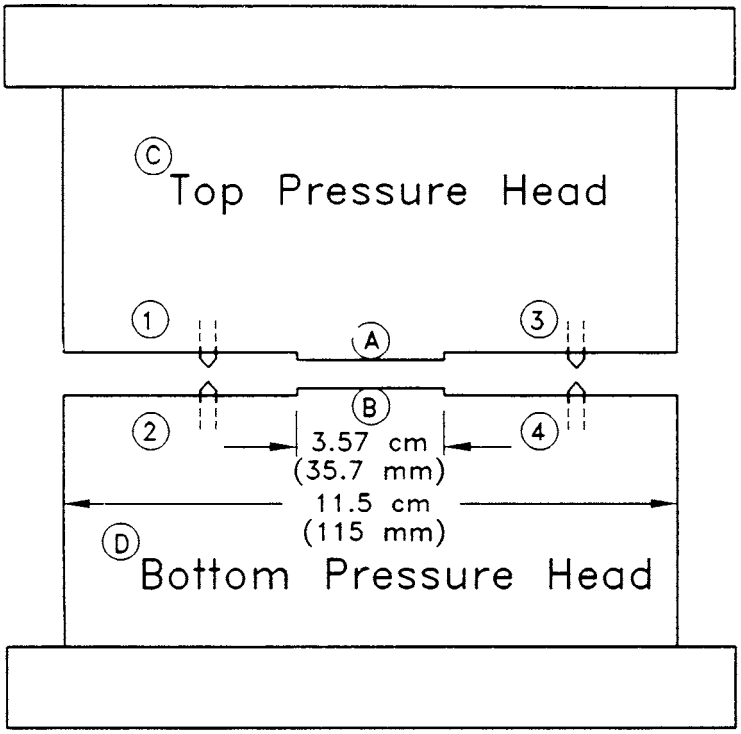

A and B: Circular Pressure Pads Making Contact with Test Specimen. The area of each pressure pad is 10 cm^2[1000 mm^2].

1 – 4: Metallic Contact/Rollnut Actuator Assemblies.

FIG. 3 Diagram of Pressure Head Assembly

of the electronic system for the two-surface tester is shown in Fig. 2. A computer compatible interface, although not mandatory, is recommended for data collection and analysis. This function is a standard feature on many commercial electronic voltmeters.

6.1.1.1 The two-surface tester measures the interlaminar resistance as follows: The constant current source of the tester forces a constant current through the insulation. The voltage which results is measured by a suitable voltmeter. The resistance of the insulation is then determined by Ohm's law. The results are communicated to the operator via a display.

6.1.2 *Constant Direct Current Source*—The use of a source which supplies constant measuring current, independent of surface resistance, is recommended. The use of a properly adjusted dc constant current source enables resistance to be read directly in units of resistance (kΩ).

6.1.2.1 In the two-surface tester, constant direct current is supplied using a feedback circuit incorporating a high gain operational amplifier. Current is set by means of an adjustable resistor. Once set, the current is held constant by means of the feedback control circuit. The test system is configured such that an indicator light will turn on if the current goes out of regulation.

6.1.2.2 Furthermore, the test system described herein is equipped with two constant current range settings, 10 and 1 μA. For interlaminar resistance values less than 1200 kΩ, the 10-μA range is suitable. For interlaminar resistance values greater than 1200 kΩ, the 1-μA range is recommended to optimize the accuracy of the measurement. This system is equipped with an indicator light that warns the operator if the current range is not appropriate for a given specimen (because the current goes out of regulation).

6.1.2.3 Because the current source setting is an exact multiple of ten, the resistance of the test specimen is numerically equal to the voltage reading to within a multiple of ten. Therefore, the resistance, in kΩ, may be directly read on the voltmeter. The decimal point is properly positioned by the current range select switch.

Copyright ASTM International
Provided by IHS under license with ASTM
No reproduction or networking permitted without license from IHS
Not for Resale

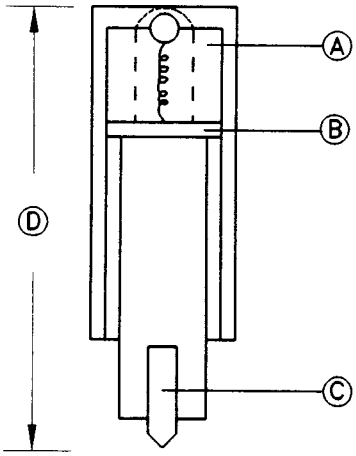

A: Ball Bearing and Spring Assembly

B: Plunger

C: Carbide Tipped Drill Bit (0.32 cm [3.2 mm] diameter drill bit)

D: Rollnut Actuator Housing and Assembly

FIG. 4 Schematic Diagram of Metallic Contact/Rollnut Actuator Assembly

6.1.3 *Contact Check Unit*—The contact check unit serves to verify the integrity of the contacts and to ensure that bad contacts do not interfere with the coating resistance measurement. The contact resistance is measured using the four-probe configuration shown in Fig. 1. Note that there are two current probes and two voltage probes. The contact resistance is measured at the start of a test by temporarily connecting the voltage contacts together with a switch. This causes current to be diverted as shown in Fig. 5. The contacts are considered acceptable if the voltage across either pair of probes is less than 5 % of the product of the maximum measurable resistance for the selected current and the selected current, that is, an associated voltage drop of 0.6 V for either current range. (Specifically, $V = i \times R$. For a current setting of 1 μA and a maximum measurable resistance of 12 000 kΩ; $0.05 \times (1\ \mu A \times 12\,000\ k\Omega) = 0.6$ V. Similarly, $0.05 \times (10\ \mu A \times 1200\ k\Omega) = 0.6$ V.) If either contact shows a voltage drop in excess of 0.6 V, a *bad contact* indicator light is lit and the measurement of interlaminar resistance is inhibited. The penetrations may be reestablished until satisfactory results are obtained. If the measurable voltage drop is less than 0.6 V, subsequent interlaminar resistance measurement is enabled.

6.1.3.1 Once suitable contact resistance values are obtained, the switch connecting the voltage contacts is opened, and current is redirected to flow through the insulation instead of the switch, Fig. 6. The interlaminar resistance can then be measured.

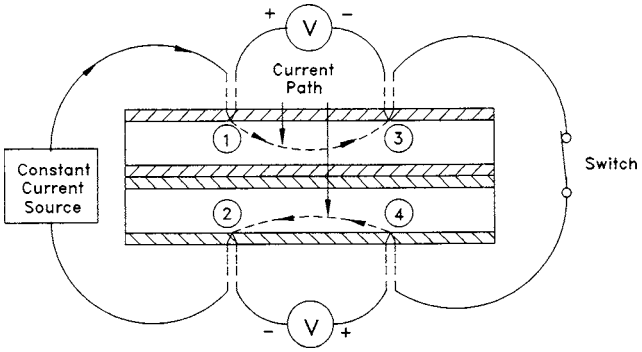

NOTE—When the switch of the Contact Check Unit (Item C–Fig. 2) is in the "closed" position, the voltage contacts are temporarily connected. The voltage drop across contacts between 1 and 3, and between 2 and 4 is evaluated. A "bad contact" indicator light is triggered if this voltage drop is in excess of 0.6 V. The measurement of the coating's interlaminar resistance is inhibited under "bad contact" conditions.

FIG. 5 Current Path During the Contact Check Process

6.1.4 *Calibration Module*—The calibration module is provided to allow precise calibration of the two-surface tester. The module is simply a set of precision resistors, and some variable resistors which may be connected to the two-surface tester by means of cables. The calibration module substitutes precisely known values of resistance for the insulation under test. It also substitutes a variable contact resistance for each of the upper and lower contacts, allowing the operation of the contact

Copyright ASTM International
Provided by IHS under license with ASTM
No reproduction or networking permitted without license from IHS
Not for Resale

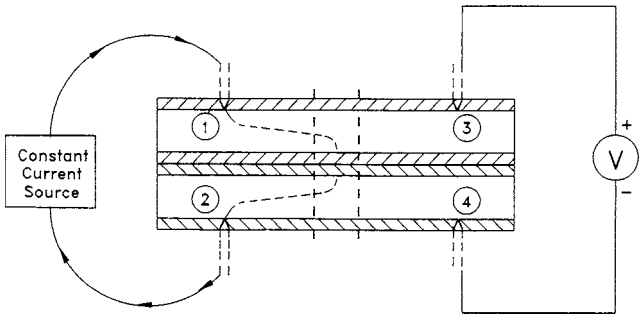

NOTE—When the switch of the Contact Check Unit (Item C–Fig. 2) is in the "open" position, the voltage drop across the "Insulation Coating Layers Under Test–(Item C–Fig. 1)" is measured. (The contacts 1 and 3 are at the same potential. The contacts 2 and 4 are at the same potential.)

FIG. 6 Current Path During the Measurement of the Coating Interlaminar Resistance Value

resistance system to be independently verified. By selecting the appropriate jumper, a precision resistor is substituted for the insulation. The meter reading should correctly read the value selected by the jumper (provided that it is within the range of measurable resistances for the given current setting).

7. Sampling

7.1 Specimens shall be representative of the coated electrical steel in the final condition to be used in the application. Specimens shall be prepared in an appropriate manner which assures representative sampling as described in Practice A 34/A 34M.

8. Test Specimen

8.1 A test specimen consists of two laminations in intimate contact. For measuring interlaminar resistance as defined in 3.1.4, each lamination should have a minimum size of 25 × 25 cm [250 × 250 mm]; each having an electrically insulating coating on both sides.

8.2 The number of specimens to be tested should be agreed upon by the producer and the user.

8.3 Special care should be taken to ensure that edge burrs, if present, do not influence the measurement. (It is preferred to have all edge burrs removed from the test specimen.)

9. Procedure

9.1 It is recommended that test specimens and metallic contacts be cleaned before testing using an appropriate solvent. This will help to avoid any measurement error resulting from the creation of point contacts by particle contamination.

9.2 Connect the test head to the electronic measurement package using cables as shown in Fig. 2.

9.3 Using the method outlined in 6.1.4, verify the electronic measuring system is calibrated and functioning properly before testing.

9.4 The recommended standard pressure for the purpose of comparative tests shall be 300 ± 15 psi [2.1 ± 0.1 MPa]. Other pressures, depending upon the intended application, may be agreed upon by the producer and the user. If more than one test pressure is to be used, apply the pressures in ascending order.

9.5 The recommended standard test temperature is 25 ± 5°C. (Capability for elevated temperature testing has not yet been developed for this unit and will not be discussed herein.)

9.6 Place the test specimen between the upper and lower pressure heads. Lower the top pressure head so that the pressure on the test specimen is that agreed upon by the producer and the user.

9.7 Assure that the appropriate measuring current range is selected using the indicator light system.

9.8 Verify the integrity of the contacts using the contact check unit as described in 6.1.3.

9.9 Once the appropriate current range has been selected and the contact integrity verified, measure the voltage developed as the measuring current passes through the insulation under test. The resistance of the insulation is then determined by Ohm's law. As described in 6.1.2, the resistance, in kΩ, may be directly read on the voltmeter.

10. Calculations

10.1 For the purpose of quality control efforts which require a quick and efficient method to provide quantitative information for grading coating insulating quality, the resistance measurement made at the specified pressure is useful. If a surface insulation resistivity value per unit area is indeed necessary, the measured resistance can be expressed in units of kΩ·cm^2 per lamination [kΩ·mm^2 per lamination] as follows:

R_{TS} = Two-Surface Insulation Resistivity (see Note 2), kΩ·cm^2 per lamination [kΩ·mm^2 per lamination] between two adjacent laminations,

A_S = contact area, cm^2 [mm^2] (A_S is 10 cm^2 [1000 mm^2] for the system described herein.) (See Note 3.)

R = measured resistance of two adjacent laminations, kΩ.

$$R_{TS} = A_S R$$

NOTE 2—Two-Surface Insulation Resistivity (R_{TS}) is defined as the surface insulation resistivity as measured using the two-surface test method.

NOTE 3—Note that the actual contact area which participates in conduction is dependent on the stiffness of the substrate, that is, a more pliable substrate will more accurately produce an area equal to that of the pressure pad. Therefore, some error in the true contact area is possible due to substrate stiffness effects. For comparing coating insulating quality for a given substrate type, the stiffness of the substrate would be expected to remain quite constant, and hence, the area should not be a variable in the test.

11. Precision and Bias

11.1 The two-surface test method as described herein eliminates one of the major sources of measurement error, namely the contact resistance. However, the variation in interlaminar resistance from sample to sample for nominally identical material is typically 10 % or more. (This variation is mainly due to variations in coating thickness.) Therefore, electronic instrumentation of the two-surface tester having an accuracy of ±3 % is sufficient.

11.2 Because the repeatability and reproducibility of the test method is significantly influenced by the nature of the surfaces

Copyright ASTM International
Provided by IHS under license with ASTM
No reproduction or networking permitted without license from IHS
Not for Resale

of the test specimens, it is not considered possible to state meaningful values for repeatability and reproducibility that are universally applicable.

11.3 *Bias*—Since there is no accepted reference material for determining the bias for the procedure in this test method for measuring resistance, bias has not been determined.

12. Keywords

12.1 electrical steel; insulating coating; interlaminar resistance; two-surface test

ANNEX

(Mandatory Information)

A1. APPARATUS

A1.1 *Pressure Head*—There are two circular pressure heads, between which are inserted the test sheets for measurement, Fig. 1. Each pressure head shall conform to the following:

A1.1.1 Each pressure head is circular and shall have a diameter of 11.5 cm [115 mm]. The pressure pad (contact area) for each head is circular and shall have a diameter of 3.57 cm [35.7 mm] and thus a cross-sectional area of 10 cm^3 [1000 mm^3]. The pressure heads must remain parallel during testing and must apply uniform pressure across the area being tested.

A1.1.2 The pressure heads and pressure pads should be smooth, flat, and free from sharp edges that may penetrate the coating and influence the measurement. Furthermore, the pressure pads should be electrically isolated from the metallic contacts and test frame so as not to interfere with the resistance measurement. The pressure heads and pads should be made from materials not subject to attack by solvents or oxidation.

A1.1.3 As shown in Fig. 3, each pressure head circumscribes two penetrating metallic contacts (drill bits). Rollnut actuators are recommended to house the drill bits and to twist the drill bits through the insulating coating of the exposed test surfaces. The drill bits and actuators should be selected so as to ensure penetration through the insulating coating of the exposed test surfaces, under the conditions outlined in this test method. Carbide tipped drill bits (0.32-cm [3.2-mm] diameter) are recommended.

A1.2 *Direct Current Source*—Constant direct current should apply no more than 15 V with an accuracy of ±3 % for the applied constant current. Ranges of 1 and 10 μA are recommended. Other ranges of current could be selected, but an appropriate conversion would have to be made to calculate the resistance (on the display unit) in ohms (to a power of ten). The interpretation of the result would become needlessly cumbersome.

A1.2.1 In principle, a constant voltage source is permissible. However, the practicality of using constant current for measuring resistivity or resistance is obvious, in that voltage developed at constant current is directly proportional to the resistance of the circuit.

A1.3 *Digital Voltmeter/Display Unit*—Unit should have high input resistance, >400 MΩ. A 3½ digit resolution and accuracy of ±3 % is sufficient. Full scale is 19.99 V.

A1.4 The *pneumatic or hydraulic press*, which is an integral part of this test, should have mounting fixtures to accommodate the test heads and sufficient force capacity to provide conditions appropriate to simulate forces that the insulation will encounter during operation. The press must provide a smooth, flat, rigid support for the test specimen.

NOTE A1.1—The press must supply 450 lbf (2100 N) to test at the recommended pressure of 300 psi (2.1 MPa) referred to in 9.4.

ASTM International takes no position respecting the validity of any patent rights asserted in connection with any item mentioned in this standard. Users of this standard are expressly advised that determination of the validity of any such patent rights, and the risk of infringement of such rights, are entirely their own responsibility.

This standard is subject to revision at any time by the responsible technical committee and must be reviewed every five years and if not revised, either reapproved or withdrawn. Your comments are invited either for revision of this standard or for additional standards and should be addressed to ASTM International Headquarters. Your comments will receive careful consideration at a meeting of the responsible technical committee, which you may attend. If you feel that your comments have not received a fair hearing you should make your views known to the ASTM Committee on Standards, at the address shown below.

This standard is copyrighted by ASTM International, 100 Barr Harbor Drive, PO Box C700, West Conshohocken, PA 19428-2959, United States. Individual reprints (single or multiple copies) of this standard may be obtained by contacting ASTM at the above address or at 610-832-9585 (phone), 610-832-9555 (fax), or service@astm.org (e-mail); or through the ASTM website (www.astm.org).

Copyright ASTM International
Provided by IHS under license with ASTM
No reproduction or networking permitted without license from IHS
Not for Resale