Designation: A 900/A 900M – 01 (Reapproved 2006)

# Standard Test Method for Lamination Factor of Amorphous Magnetic Strip[1]

This standard is issued under the fixed designation A 900/A 900M; the number immediately following the designation indicates the year of original adoption or, in the case of revision, the year of last revision. A number in parentheses indicates the year of last reapproval. A superscript epsilon (ε) indicates an editorial change since the last revision or reapproval.

## 1. Scope

1.1 This test method covers measurements of lamination factor (Note 1) of a specimen composed of strips cut from amorphous magnetic material. It is suitable for the determination of lamination factor for thin, flat case, metallic strip ranging in width from 0.25 to 8.00 in. [6.35 mm to 203 mm] and in thickness from 0.0005 to 0.005 in. [12.7 to 127 μm].

NOTE 1—Lamination factor is also termed space factor or stacking factor.

1.2 The values and equations stated in customary (egs-emu and inch-pound) or SI units are to be regarded separately as standard. Within this standard, SI units are shown in brackets. The values stated in each system may not be exact equivalents; therefore, each system shall be used independently of the other. Combining values from the two systems may result in nonconformance with this standard.

1.3 *This standard does not purport to address all of the safety concerns, if any, associated with its use. It is the responsibility of the user of this standard to establish appropriate safety and health practices and determine the applicability of regulatory limitations prior to use.*

## 2. Summary of Test Method

2.1 The laminated test specimen is oriented and aligned, then subjected to pressure in a compression device. The resulting volume is then determined from the measured specimen height, width, and length. An equivalent solid volume is calculated from the specimen mass and the true density of the specimen material. The ratio of the calculated (equivalent solid) volume to the measured volume is the lamination factor.

## 3. Significance and Use

3.1 Lamination factor *S* indicates the deficiency of effective material volume which is due to the presence of oxides, roughness, insulating coatings, and other conditions affecting the strip surface.

3.2 This test method is used to predict the fraction of metal that is included in the volume of the firm coil wound from the specimen tape.

## 4. Interferences

4.1 This test method is predicated on correctly aligned test strips and uniform compression during test. Both of these conditions are difficult to meet whenever the test specimens have one or more elevated ridges running lengthwise along the surface of the strip.

4.2 This test method also presupposes that the test specimens are free from other defects, such as camber and waviness, that may affect the lamination factor.

## 5. Apparatus

5.1 *Micrometers*—Two types of micrometers are included for use in this test method as follows:

5.1.1 *Motor-Operated, Deadweight (Not Spring) Actuated Micrometer*, conforming to the following requirements:

5.1.1.1 The micrometer shall be a deadweight digital- or dial-type micrometer, having two ground and lapped circular surfaces with a capacity of not less than 0.030 in. [0.75 mm]. The movable face or presser foot shall have an area of 0.25 to 0.33 in.$^2$ [160 to 215 mm$^2$] and corresponding to a diameter of approximately 0.56 to 0.65 in. [14.2 to 16.5 mm]. The fixed face or anvil shall be of such size that the whole area of the presser foot is in contact with the anvil in the zero position.

5.1.1.2 The surface shall be parallel to within 0.000 05 in. [0.0012 mm] and the presser foot shall move on an axis perpendicular to the anvil.

5.1.1.3 The presser foot shall exert a steady pressure on the specimen of 7.0 to 8.0 psi [48 to 55 kPa].

5.1.1.4 A digital readout is preferred. If an analog gauge is used, the dial shall be at least 2 in. [51 mm] in diameter. It shall be continuously graduated to read directly to 0.0001 in. [0.0025 mm] and shall be required with a telltale hand, if necessary, recording the number of complete revolutions of the large hand.

5.1.1.5 The micrometer shall be capable of repeating its readings to 0.000 05 in. [0.0012 mm] at zero setting or on a steel gauge block.

[1] This test method is under the jurisdiction of ASTM Committee A06 on Magnetic Properties and is the direct responsibility of Subcommittee A06.01 on Test Methods.

Current edition approved May 1, 2006. Published May 2006. Originally approved in 1991. Last previous edition approved in 2001 as A 900/A 900M – 01.

Copyright © ASTM International, 100 Barr Harbor Drive, PO Box C700, West Conshohocken, PA 19428-2959, United States.



Copyright ASTM International
Provided by IHS under license with ASTM
No reproduction or networking permitted without license from IHS
Copyright by ASTM Int'l (all rights reserved);
Reproduction authorized per License Agreement with Monique Tyler (ASTMIHS Account); Tue May 30 13:50:53 EDT 2006
Not for Resale

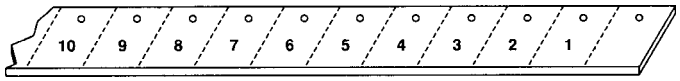


**FIG. 1 Ribbon Length for Lamination Factor Testing With Reference Marks**

5.1.1.6 The deviations for the parts of the scale corresponding to the specimen thickness measured shall be applied as corrections to the thickness reading.

5.1.1.7 The frame of the micrometer shall be of such rigidity that a load of 3 lb [1.5 kg] applied to the dial housing, out of contact with either the weight or the presser foot spindle, will produce a deflection of the frame not greater than 0.0001 in. [0.0025 mm], as indicated on the micrometer dial.

5.2 *Manually Operated Deadweight (Not Spring) Actuated Dial-Type Micrometer*, conforming to the general requirements of 5.1.1 to 5.1.1.7.

5.3 *Holding Fixture*, to facilitate the aligning of the test strips and to hold them aligned during the test, is included for use on this test method. A sample design is given in Appendix X1.

## 6. Sampling and Test Specimens

6.1 Samples shall be obtained from both the beginning and end of spool (or material lot as mutually agreed upon between producer and consumer) and undergo testing separately.

6.2 The test specimen shall consist of a stack of identical length test strips, cut from the sample coil, and shall be between 10 and 30 in number, depending on the strip thickness, as indicated in 6.5. The strip shall be cut consecutively from the sample coil as shown in Fig. 1 and the identical length selection shall be within the range of 3 to 5 in. [76 to 127 mm].

6.3 Amorphous alloys are manufactured by pouring molten metal on a rapidly spinning chill-wheel and periodic thickness variations, if any, will be related to the position on the wheel circumference. To ensure that such variations are properly averaged, the total length of tape used in this test should be in multiples of the wheel circumference.

6.4 If the exact chill-wheel diameter is not known, it can be assumed to be 15 in., that is, 47.12 in. [120 cm] in circumference. Most of the material currently made requires 20 strips for the lamination factor test; therefore, 12-cm-long test strips would use exactly two wheel circumferences of sample tape.

6.5 The number of laminations needed to maintain the stack height in the 15- to 30-mil range is indicated as follows:

| Thickness of Tape, mils (μm) | Number of Strips Needed |
|---|---|
| 0.50–0.74 (13–19) | 30 |
| 0.74–1.50 (20–38) | 20 |
| 1.51–3.00 (39–76) | 10 |

## 7. Procedure

7.1 Select a representative segment from each sample of material to be tested and cut the required number of strips as specified in 6.5 to a length as specified in 6.2.

7.2 Stack the test strips directly on top of one another in the aligning fixture. Maintain the proper directionally as in Fig. 2.

7.3 Align the edges of the strips and secure the stack by clamping.

7.4 Determine the maximum thickness of the specimen stack by making multiple measurements across the entire width, at intervals slightly smaller than the presser foot of the micrometer, to ensure a small overlap in the area covered. The maximum height measured is recorded and used in the lamination factor computation.

## 8. Calculation

8.1 Using the thickness value measured in 7.4, calculate the percent lamination factor as follows:

$$S = \frac{m}{lw\delta hk}$$

where:

$S$ = lamination factor, % [%];
$m$ = mass of specimen, g [kg];
$w$ = width, mm [mm];
$h$ = thickness, μm [μm];
$\delta$ = density of specimen material, g/cm$^3$ [kg/m$^3$];
$l$ = length of test strips, cm [m]; and
$k$ = equation constant, $10^{-7}$ [$10^{-11}$].

8.2 Length and width dimensions should be known to an accuracy of at least ±0.25 % and preferably to ±0.1 %.

## 9. Precision and Bias

9.1 It has been statistically determined that a firm toroid (or coil) of amorphous ribbon with precisely aligned edges, will have a lamination factor within ±2.0 % of the value predicted by this test method.

9.2 The bias of measurement with this method may decrease to ±5.0 % if the thickness variation across the strip width is more than 10 %.

## 10. Keywords

10.1 amorphous material; lamination factor; space factor; stacking factor

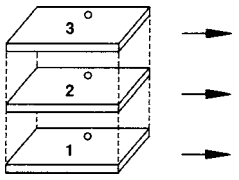


**FIG. 2 Orientation of Stack Specimen**



Copyright ASTM International
Provided by IHS under license with ASTM
No reproduction or networking permitted without license from IHS
Copyright by ASTM Int'l (all rights reserved);
Reproduction authorized per License Agreement with Monique Tyler (ASTMIHS Account); Tue May 30 13:50:53 EDT 2006
Not for Resale

## APPENDIX

**(Nonmandatory Information)**

## X1. APPARATUS

X1.1 *Automatic Micrometer*—To measure the lamination factor on a large number of samples, an automatic micrometer may be preferred. Such equipment has been designed for measuring paper thickness (see Fig. X1.1 and Fig. X1.2).

X1.2 *Holding Fixture*—A drill-press vise can be modified to serve as a suitable sample holder by extending the jaws to conform with the width of the test material (see Fig. X1.3).

X1.2.1 The two steel plates should be parallel to each other and normal to the base. Stainless steel is prefered to avoid corrosion. The plates should be of sufficient thickness to prevent flexing. A good rule is to use 1⁄16 in. [1.6 mm] of thickness per 1 in. [25 mm] of extension above the vise.

X1.2.2 The blunt end of the vise should be ground parallel to the jaw plates and the thickness adjusted to align the bottom of the sample stack with the anvil of the micrometer (See Fig. X1.2).

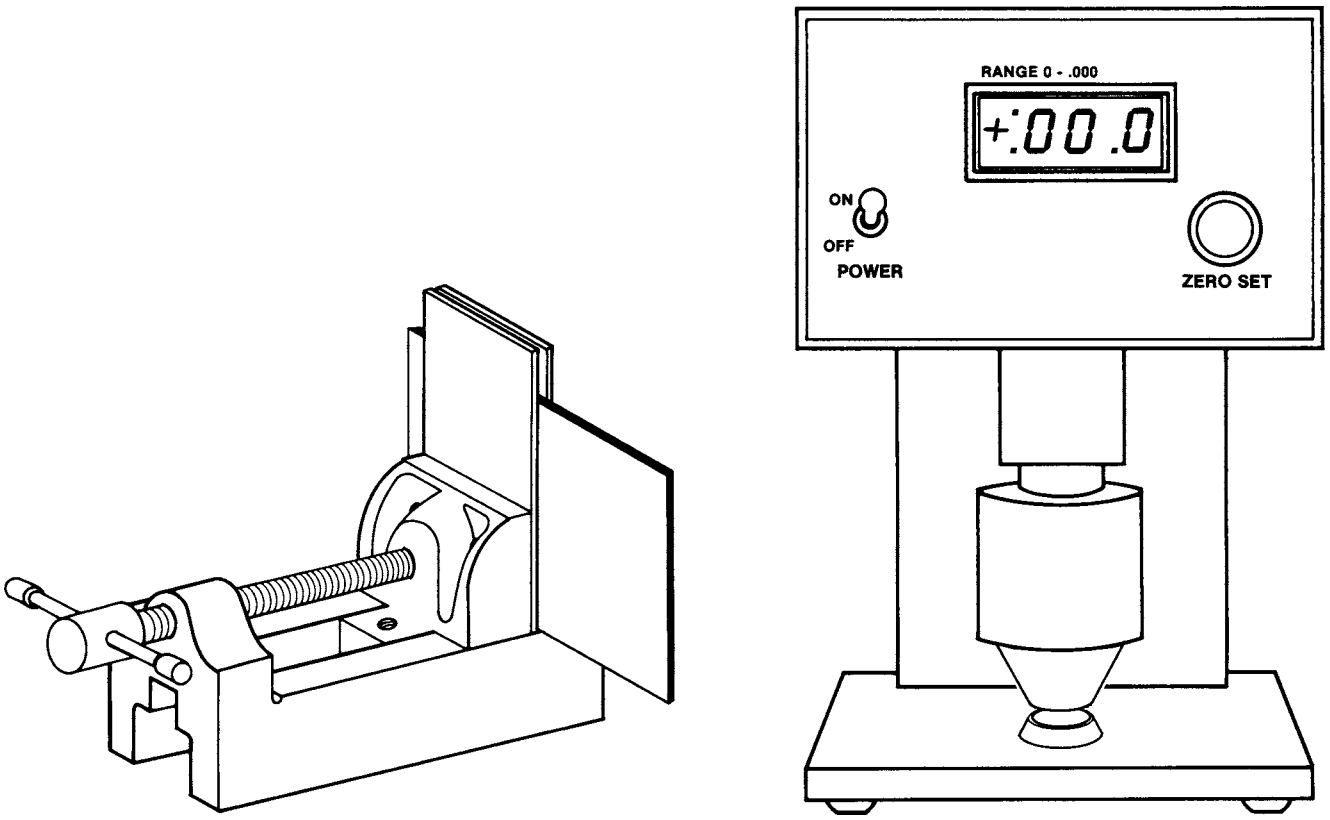


NOTE—On the left is a lathe vise, modified with steel plates to extend the reach of jaws, in position for loading and aligning the strips.

**FIG. X1.1 Automatic Digital Micrometer for Thickness Measurement**



Copyright ASTM International
Provided by IHS under license with ASTM
No reproduction or networking permitted without license from IHS
Copyright by ASTM Int'l (all rights reserved);
Reproduction authorized per License Agreement with Monique Tyree (ASTMIHS Account); Tue May 30 13:50:53 EDT 2006
Not for Resale

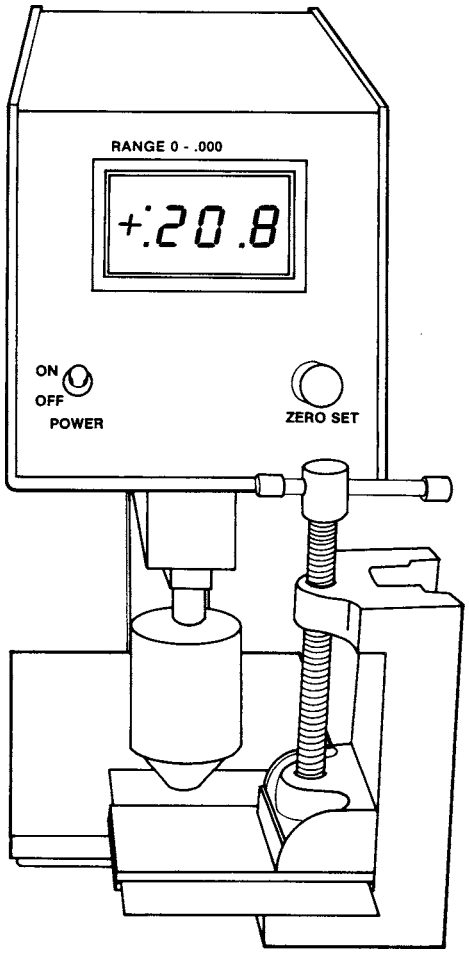


NOTE—The amorphous strips extend over the anvil of the micrometer.

**FIG. X1.2 Holding Fixture in Position for Thickness Measurement**

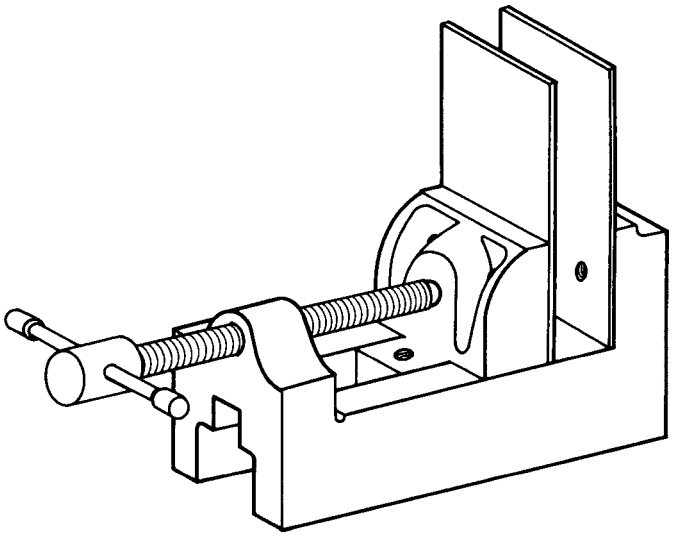

**FIG. X1.3 Drill-Press Vise Modified With Long Jaws to Serve as a Sample Holder for Thickness Measurement**

*ASTM International takes no position respecting the validity of any patent rights asserted in connection with any item mentioned in this standard. Users of this standard are expressly advised that determination of the validity of any such patent rights, and the risk of infringement of such rights, are entirely their own responsibility.*

*This standard is subject to revision at any time by the responsible technical committee and must be reviewed every five years and if not revised, either reapproved or withdrawn. Your comments are invited either for revision of this standard or for additional standards and should be addressed to ASTM International Headquarters. Your comments will receive careful consideration at a meeting of the responsible technical committee, which you may attend. If you feel that your comments have not received a fair hearing you should make your views known to the ASTM Committee on Standards, at the address shown below.*

*This standard is copyrighted by ASTM International, 100 Barr Harbor Drive, PO Box C700, West Conshohocken, PA 19428-2959, United States. Individual reprints (single or multiple copies) of this standard may be obtained by contacting ASTM at the above address or at 610-832-9585 (phone), 610-832-9555 (fax), or service@astm.org (e-mail); or through the ASTM website (www.astm.org).*



Copyright ASTM International
Provided by IHS under license with ASTM
No reproduction or networking permitted without license from IHS
Copyright by ASTM Int'l (all rights reserved);
Reproduction authorized per License Agreement with Monique Tyree (ASTMIHS Account); Tue May 30 13:50:53 EDT 2006
Not for Resale