Designation: A 897/A 897M – 06

Standard Specification for Austempered Ductile Iron Castings[1]

This standard is issued under the fixed designation A 897/A 897M; the number immediately following the designation indicates the year of original adoption or, in the case of revision, the year of last revision. A number in parentheses indicates the year of last reapproval. A superscript epsilon (ε) indicates an editorial change since the last revision or reapproval.

1. Scope

1.1 This specification covers ductile iron castings that are subsequently heat treated by an austempering process as defined in 10.1.

1.2 The application of the austempering heat treatment extends the range of properties achievable in ductile iron castings.

1.3 No precise quantitative relationship can be stated between the properties of the iron in various locations of the same casting or between the properties of castings and those of a test specimen cast from the same iron (see Appendix X1). However, austempering heat treatment will tend to diminish any differences in mechanical properties.

1.4 The production of castings, machining (if required), and the austempering heat treatments may be performed by different manufacturers, as covered in Section 15. The purchaser should establish by contract agreement, at the time of ordering, the responsibility of the various parties for meeting the specification requirements.

1.5 The values stated in either inch-pound or SI units are to be regarded separately as standard. Within the text, the SI units are shown in brackets [ ]. The values stated in each system are not exact equivalents; therefore, each system shall be used independently of the other. Combining values from the two systems may result in nonconformance with the specification.

2. Referenced Documents

2.1 *ASTM Standards:* [2]

A 247 Test Method for Evaluating the Microstructure of Graphite in Iron Castings

A 370 Test Methods and Definitions for Mechanical Testing of Steel Products

A 732/A 732M Specification for Castings, Investment, Carbon and Low Alloy Steel for General Application, and Cobalt Alloy for High Strength at Elevated Temperatures

A 834 Specification for Common Requirements for Iron Castings for General Industrial Use

E 8 Test Methods for Tension Testing of Metallic Materials

E 10 Test Method for Brinell Hardness of Metallic Materials

E 23 Test Methods for Notched Bar Impact Testing of Metallic Materials

2.2 *Military Standard:*

MIL-STD-129 Military Marking for Shipment and Storage[3]

3. Ordering Information

3.1 Orders for material to this specification shall include the following information:

3.1.1 ASTM designation, with year of issue,

3.1.2 Grade of austempered ductile iron required (see Table 1 and Sections 6 and 7),

3.1.3 Chemical composition requirements, if any (see Section 4),

3.1.4 Heat treated microstructure restrictions (see Section 10),

3.1.5 Test coupon criteria (see Section 12),

3.1.6 Lot size and tests per lot (see 12.6 and Section 15),

3.1.7 Special requirements, if desired, including hardness, radiographic soundness, magnetic particle inspection, pressure tightness, dimensions, or surface finish (see Section 9),

3.1.8 Certification, if required (see Section 16),

3.1.9 Special preparation for delivery, if required (see Section 17).

4. Chemical Composition

4.1 Although this specification has no specific chemical requirements, such requirements may be agreed upon between the manufacturer, heat treater, and the purchaser.

[1] This specification is under the jurisdiction of ASTM Committee A04 on Iron Castings and is the direct responsibility of Subcommittee A04.02 on Malleable and Ductile Iron Castings.

Current edition approved Feb. 1, 2006. Published February 2006. Originally approved in 1990. Last previous edition approved in 2003 as A 897/A 897M - 03.

[2] For referenced ASTM standards, visit the ASTM website, www.astm.org, or contact ASTM Customer Service at service@astm.org. For *Annual Book of ASTM Standards* volume information, refer to the standard's Document Summary page on the ASTM website.

[3] Available from Standardization Documents Order Desk, DODSSP, Bldg. 4, Section D, 700 Robbins Ave., Philadelphia, PA 19111-5098.

Copyright © ASTM International, 100 Barr Harbor Drive, PO Box C700, West Conshohocken, PA 19428-2959, United States.

Copyright ASTM International
Provided by IHS under license with ASTM
No reproduction or networking permitted without license from IHS
Not for Resale
Reproduction authorized per License Agreement with Monique Tyree (ASTMIHS Account); Mon Feb 27 12:18:54 EST 2006

TABLE 1 Mechanical Property Requirements of Grades

Inch-pound units	Grade 110/70/11	Grade 130/90/09	Grade 150/110/07	Grade 175/125/04	Grade 200/155/02	Grade 230/185/01
Tensile strength, min, ksi	110	130	150	175	200	230
Yield strength, min, ksi	70	90	110	125	155	185
Elongation in 2 in., min, %	11	9	7	4	2	1
Impact energy, ft-lb[A]	80	75	60	45	25	15
Typical hardness, HBW, kg/mm^2[B]	241–302	269–341	302–375	341–444	388–477	402–512

[A]Unnotched charpy bars tested at 72 ± 7°F. The values in the table are a minimum for the average of the highest three test values of the four tested samples.
[B]Hardness is not mandatory and is shown for information only.

SI units	Grade 750/500/11	Grade 900/650/09	Grade 1050/750/07	Grade 1200/850/04	Grade 1400/1100/02	Grade 1600/1300/01
Tensile strength, min, MPa	750	900	1050	1200	1400	1600
Yield strength, min, MPa	500	650	750	850	1100	1300
Elongation in 50 mm, min, %	11	9	7	4	2	1
Impact energy, J[A]	110	100	80	60	35	20
Typical hardness, HBW, kg/mm^2[B]	241–302	269–341	302–375	341–444	388–477	402–512

[A] Unnotched charpy bars tested at 22 ± 4°C. The values in the table are a minimum for the average of the highest three test values of the four tested samples.
[B]Hardness is not mandatory and is shown for information only.

5. Microstructure

5.1 The graphite component of the microstructure shall consist of a minimum 80 % spheroidal graphite conforming to Types I and II per Test Method A 247.

5.2 The matrix microstructure shall substantially consist of ausferrite (acicular ferrite and high carbon, stable austenite). Proeutectoid ferrite will also be present in Grade 110/70/11 [750/500/11].

5.3 The cooling rate within some sections may not be sufficient to avoid the formation of pearlite or other high temperature transformation products. In some cases, the maximum acceptable quantities of these microconstituents and the location(s) within the casting may be established by agreement between the manufacturer, heat treater, and the purchaser.

5.4 Martensite may be present in minor amounts in the microstructures of Grades 200/155/02 [1400/1100/02] and 230/185/01 [1600/1300/01]. Acceptable quantities of martensite may be established by agreement between the manufacturer, heat treater, and the purchaser.

5.5 The microstructure shall be substantially free of undesirable microconstituents, the details of which shall be agreed upon by the manufacturer, heat treater, and the purchaser.

5.6 The manufacturer, heat treater, and the purchaser may agree upon special chemical compositions or processing requirements to limit the microconstituents described in 5.3, 5.4, and 5.5.

6. Mechanical Properties

6.1 Tensile property requirements include tensile strength, yield strength, and elongation and apply only after austempering heat treatment.

6.2 The iron represented by the test specimens shall conform to the requirements as presented in Table 1.

6.3 The yield strength shall be determined by the 0.2 % offset method (see Test Methods E 8).

7. Impact Requirements

7.1 The iron represented by the test specimens shall conform to the impact properties presented in Table 1.

7.2 Impact energy requirements apply only after test material has been austempered. The impact test specimens must be finish ground to required dimensions after heat treatment.

8. Hardness

8.1 The area or areas on the castings where hardness is to be checked shall be established by agreement between the manufacturer and purchaser, or the manufacturer and the end user.

8.2 Brinell hardness shall be determined according to Test Method E 10 after sufficient material has been removed from the casting surface to insure representative hardness readings. The 10 mm ball and 3000 kg load shall be used unless otherwise specified and agreed upon.

9. Special Requirements

9.1 When specified in the contract or purchase order, castings shall meet special requirements as to hardness, chemical composition, microstructure, pressure tightness, radiographic soundness, magnetic particle inspection, dimensions, and surface finish. Refer to Specification A 834 for a list of common requirements for iron castings not specifically referenced elsewhere in this specification.

9.2 When specified in the contract or purchase order, castings shall meet special requirements prior to the austempering heat treatment operation.

10. Heat Treatment

10.1 Castings produced in accordance with this specification shall be heat treated by an austempering process consisting of heating the castings to a fully austenitic, homogeneous condition or an austenite/ferrite condition for Grade 110/70/11 [750/500/11], cooling (at a rate usually sufficient to avoid the formation of pearlite) to a temperature above the martensite start temperature, and isothermally transforming the matrix structure for a time sufficient to produce the desired properties. This process shall produce a microstructure that is substantially ausferrite or ausferrite/proeutectoid ferrite for Grade 110/70/11 [750/500/11].

10.2 Upon agreement between the manufacturer and the purchaser, tension test specimens described in Section 13 may

Copyright ASTM International
Provided by IHS under license with ASTM
No reproduction or networking permitted without license from IHS
Copyright by ASTM Int'l (all rights reserved);
Reproduction authorized per License Agreement with Monique Tyree (ASTMIHS Account); Mon Feb 27 12:18:54 EST 2006
Not for Resale

be machined prior to the austempering heat treatment. In this case, heat treatment shall be performed in an inert or carbon controlled environment so as to prevent carburization, decarburization, or scaling. Handling and fixturing must be such as to prevent test bar distortion (see X1.4).

10.3 Re-austempering of castings or any deviation from the established heat treating process is only permissable with the approval of the casting purchaser.

11. Workmanship, Finish, and Appearance

11.1 The surfaces of castings shall be clean and free of adhering molding material, heat treatment oils or salts, cracks, hot tears, or other injurious defects such as slag and surface porosity. Dimensions shall conform to drawings or patterns supplied by the purchaser.

11.2 Castings shall not have chilled corners or center chill in areas to be machined.

11.3 Welding repair is not acceptable on austempered castings.

12. Test Coupons

12.1 Separately cast test coupons from which the tension test and Charpy test specimens are machined shall be cast to the size and shape shown in Fig. 1 or Fig. 2. A modified keel block cast from the mold shown in Fig. 3 may be substituted for the 1-in. [25-mm] Y-block or the 1-in. [25-mm] keel block. The test coupons shall be cast in open molds made of suitable core sand having a minimum wall thickness of 1½ in. [38-mm] for the ½-in. [13-mm] and 1-in. [25-mm] sizes and 3 in. [76-mm] for the 3-in. [76-mm] size. The coupons shall be left in the mold until they have cooled to a black color (900°F [480°C] or less). The size and type of coupon cast to represent the casting shall be at the option of the purchaser. In case no option is expressed, the manufacturer shall make the choice.

12.2 When investment castings are made in accordance with this specification, the manufacturer may use cast-to-size test

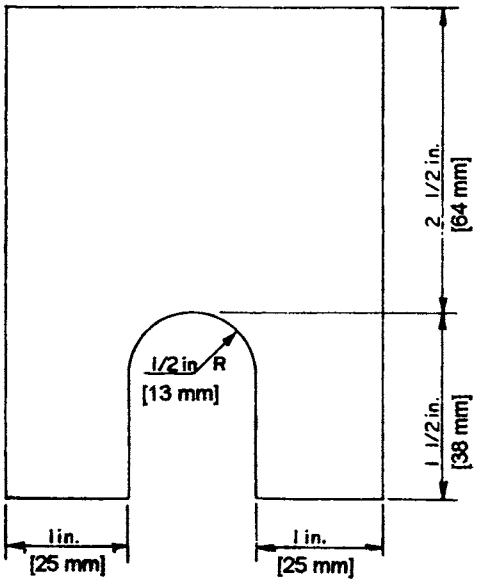

NOTE—The length of the keel block shall be 6 in. [150 mm].

FIG. 1 Keel Block for Test Coupons

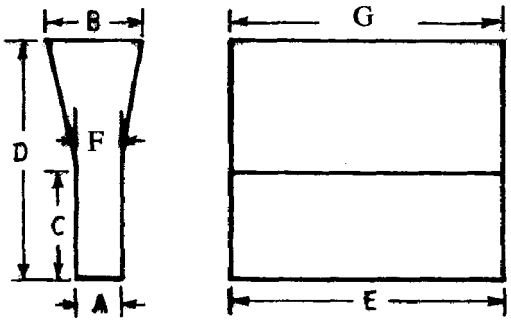

Dimensions	"Y" Block Size		
	For Castings of Thickness Less Than ½ in. [13 mm]	For Castings of Thickness ½ to 1½ in. [13 to 38 mm]	For Castings of Thickness of 1½ in. [38 mm] and Over
	in. [mm]	in. [mm]	in. [mm]
A	½ [13]	1 [25]	3 [75]
B	1⅝ [40]	2⅛ [55]	5 [125]
C	2 [50]	3 [75]	4 [100]
D	4 [100]	6 [150]	8 [200]
E	7 [175] approx	7 [175] approx	7 [175] approx
F	9⁄16 [14]	1 1⁄16 [27]	3 1⁄16 [78]
G	7 ⅛ [180] approx	7 ⅛ [180] approx	7 ⅛ [180] approx

FIG. 2 Y-Blocks for Test Coupons

specimens that are either incorporated in the mold with the castings or separately cast using the same type of mold and the same thermal conditions that are used to produce the castings. The test specimens shall be made to the dimensions shown in Fig. 1 of Specification A 732 or Fig. 5 of Test Methods and Definitions A 370. The exact procedure to be used for producing test specimens shall be agreed upon by the manufacturer and the purchaser.

12.3 When castings made in accordance with this specification are produced by nodularization directly in the mold, the manufacturer may use either separately cast test coupons or test specimens cut from castings. If test bars are to be cut from castings, test bar location shall be agreed upon by the purchaser and the manufacturer and indicated on the casting drawing. When separately cast test coupons are used, selection shall be as outlined in 12.1 and shown in Figs. 1-6. Appendix X2 provides guidelines for selection of coupons with mold cooling rates representative of various casting sections.

12.4 Test coupons shall be poured from the same ladle or heat as the castings they represent and, unless otherwise agreed upon by the manufacturer and the purchaser, shall be subject to the same post inoculation and alloying practice.

12.5 Test coupons shall be heat treated with the castings they represent.

12.6 The number of test coupons and the number of tests required per order or lot size shall be established at the time of ordering. This agreement should include a definition of lot size. Lot size can be defined to include the entire order, a specified portion of that order, a specified manufacturing production period, or a specified quantity of parts shipped to the purchaser.

12.7 If any test specimen shows obvious defects, another may be cut from the same test block or from another test block

Copyright ASTM International
Provided by IHS under license with ASTM
No reproduction or networking permitted without license from IHS
Not for Resale
Copyright by ASTM Int'l (all rights reserved);
Reproduction authorized per License Agreement with Monique Tyree (ASTMIHS Account); Mon Feb 27 12:18:54 EST 2006

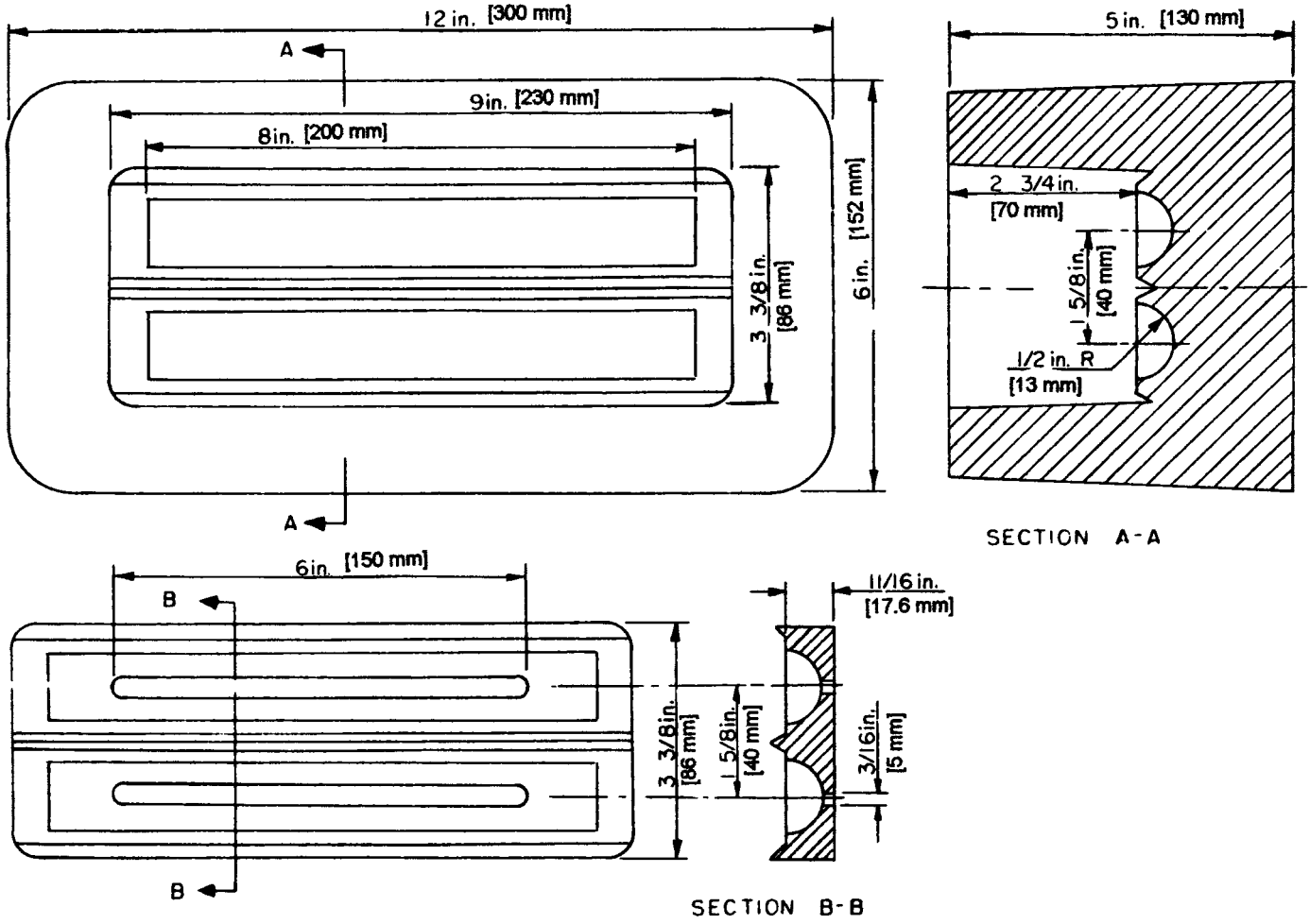

FIG. 3 Mold for Modified Keel Block

representing the same metal. Positions other than "A" or "B" in Fig. 4 shall not be used. In those cases where removal of test bars from actual castings has been agreed upon (see 12.2 and 12.3), a second test bar may be obtained from an alternate location of equivalent section or from a second casting processed in the same lot.

13. Tension Test Specimens

13.1 The standard round tension test specimen with a 2-in. [50-mm] gage length shown in Fig. 5 shall be used, except when the ½-in. [13-mm] Y-block coupon is used. In this case, either of the test specimens shown in Fig. 6 shall be satisfactory. Tension test specimens shall be machined only from Positions A (preferred) or B in Fig. 4. The test bars may be machined before or after heat treatment in accordance with 10.2.

14. Impact Test Specimens

14.1 The unnotched Charpy impact strength shall be determined according to Test Methods E 23 with the following variations: Specimens are to be prepared unnotched to dimensions in Fig. 9 of Test Methods E 23. Blanks from which test specimens are machined shall be cut only from Positions A or B in Fig. 4. Test temperature shall be 72 ± 7°F [22 ± 4°C]. Four specimens shall be tested, with the lowest impact energy value discarded and the remaining three values averaged. The average impact energy shall meet the requirement of Table 1.

15. Responsibility for Quality and Inspection

15.1 At the time of an order, the purchaser should establish an agreement for quality and inspection requirements with the manufacturers. The form of this agreement depends upon which of the conditions in 15.2 or 15.3 are determined to exist.

15.2 If all manufacturing operations are performed by a single manufacturer, that manufacturer is responsible for performance of all quality and inspection requirements covered herein.

15.3 If, at the time of ordering, the purchaser determines that more than one manufacturer will contribute to the casting, machining, and heat treatment operations, in any sequential fashion, an agreement should be negotiated that defines and assigns individual responsibility for each specific quality and inspection requirement. This does not prevent an agreement wherein any one manufacturer in the chain of sequential operations can agree to assume full responsibility for all quality and inspection requirements.

15.4 To avoid future disputes, the purchaser can require that all companies in the manufacturing chain be identified.

Copyright ASTM International
Provided by IHS under license with ASTM
No reproduction or networking permitted without license from IHS
Not for Resale
Reproduction authorized per License Agreement with Monique Tyree (ASTMIHS Account); Mon Feb 27 12:18:54 EST 2006

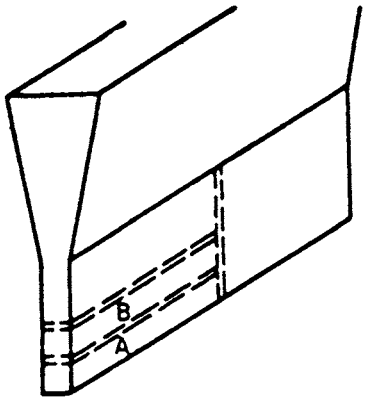

(a) ½-in. [13-mm] Y-Block—Two blanks for 0.252-in. [6.5-mm] diameter tension test specimens.

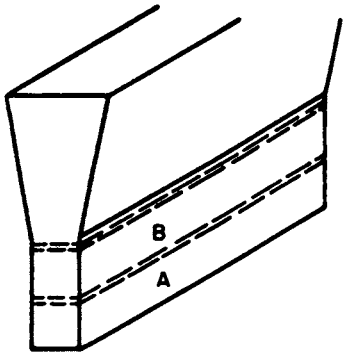

(b) 1-in. [25-mm] Y-Block—Two blanks for 0.50-in. [13-mm] diameter tension test specimens.

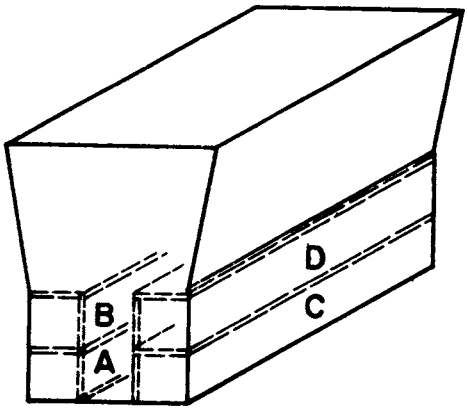

(c) 3-in. [75-mm] Y-Block—Two blanks for 0.50-in. [13-mm] diameter tension test specimens.

FIG. 4 Sectioning Procedure for Y-Blocks

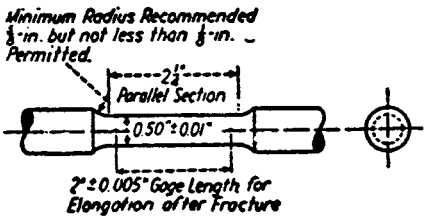

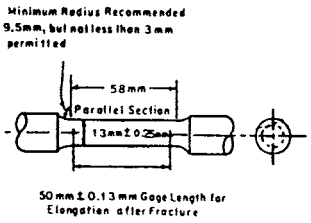

NOTE—The gage length and fillets shall be as shown but the ends may be of any shape to fit the holders of the testing machine in such a way that the load shall be axial. The reduced section shall have a gradual taper from the ends toward the center, with the ends 0.003 to 0.005 in. [0.08 to 0.13 mm] larger in diameter in the center.

FIG. 5 Standard Round Tension Test Specimen with 2-in. [50-mm] Gage Length

Changes shall not be made without approval of the purchaser. The manufacturer(s) may require the purchaser to provide written agreement for any changes mutually agreed upon.

15.5 Unless specified to the contrary by the purchaser, any of the manufacturers in the chain may use his or her own or any other facilities for performance of the inspection requirements. Responsibility for meeting the specified properties remains with the parties defined in 15.2 or 15.3. This shall not prevent the purchaser from also performing any or all of the quality and inspection requirements.

16. Certification

16.1 Where required by contract, the manufacturer's certification shall be furnished to the purchaser stating that the material was manufactured, sampled, tested, and inspected in accordance with the material specification and was found to

Copyright ASTM International
Provided by IHS under license with ASTM
Copyright by ASTM Int'l (all rights reserved);
No reproduction or networking permitted without license from IHS
Not for Resale
Reproduction authorized per License Agreement with Monique Tyree (ASTMIHS Account); Mon Feb 27 12:18:54 EST 2006

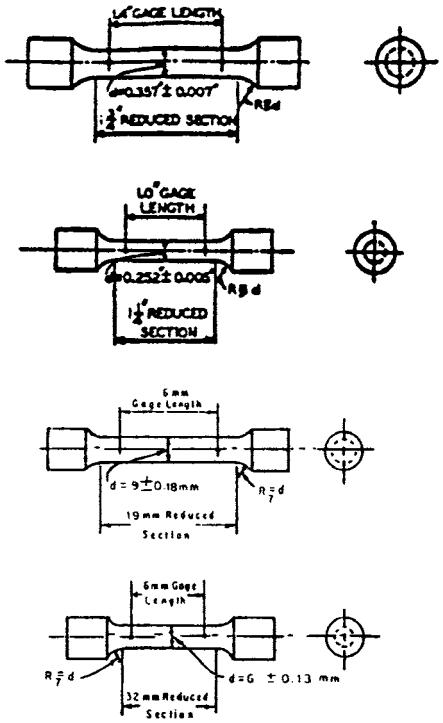

NOTE—If desired, the length of the reduced section may be increased to accommodate an extensometer.

FIG. 6 Examples of Small-Size Specimens Proportional to Standard ½-in. [13-mm] Round Specimen

meet the requirements. The certification shall include the results of all tests performed.

17. Preparation for Delivery

17.1 Unless otherwise specified in the contract or purchase order, cleaning, drying, preservation, and packaging of castings shall be in accordance with the manufacturer's commercial practice. Packaging and marking shall be adequate to ensure safe delivery by the carrier.

17.2 *Government Procurement*—When specified in the contract or purchase order, marking for shipment shall be in accordance with the requirements of MIL-STD-129.

18. Keywords

18.1 Ausferrite; Austempering; Ductile Cast Iron; Hardenability; Heat Treatment; Proeutectoid Ferrite

APPENDIXES

(Nonmandatory Information)

X1. MECHANICAL PROPERTIES OF CASTINGS

X1.1 In order to achieve the required mechanical properties in castings, or test coupons, the iron must have a chemical composition that provides sufficient hardenability to fully respond in the austempering heat treatment cycle. The response to heat treatment is affected by the effective section size, graphite nodule count, and chemical composition. It also depends on the capabilities of the specific heat treater's equipment. The heavier the effective section size and the more massive the casting, the slower will be the cooling or quenching rate in the austempering cycle. This quenching rate must exceed some critical value to attain the correct microstructure (ausferrite or ausferrite and proeutectoid ferrite).

X1.2 Published literature and commercial heat treaters as well as many foundries can provide information on required alloy additions needed for specific parts, casting section sizes, or masses. Austempered Ductile Iron can be successfully produced from ductile iron castings with a wide range of chemical compositions and configurations. There is no optimum recipe; however those produced to the following parameters have been shown to yield excellent results.

X1.2.1 The castings should be free of non-metallic inclusions, carbides, shrink and dross. Proper purchasing, storage and use of charge materials will minimize the occurrence of carbides and gas defects. Proper molding control will minimize surface defects and other sub-surface discontinuities. The castings should be properly gated and poured using consistent and effective treatment and inoculation techniques to yield shrink free castings. Any of the aforementioned non-conforming conditions will reduce the toughness of an ADI component, even if adequate for conventional ductile iron. The following should be met as a minimum: Nodule Count 100/mm2 and Nodularity 80%.

X1.2.2 The carbon equivalent (CE) can be approximated by the relationship: CE = %C + 1/3 (%Si). It should be controlled as follows in Table X1.1.

X1.3 Alloying elements such as Molybdenum, Copper, Nickel and additional Manganese above the base metal level should be added only when additional hardenability is required for heavy sections. Increased hardenability is only required to avoid the formation of pearlite during quenching. The amount of alloying required (if any) will be a function of the alloy

Copyright ASTM International
Provided by IHS under license with ASTM
No reproduction or networking permitted without license from IHS
Copyright by ASTM Int'l (all rights reserved);
Reproduction authorized per License Agreement with Monique Tyler (ASTMIHS Account); Mon Feb 27 12:18:54 EST 2006
Not for Resale

TABLE X1.1 Suggested Carbon Equivalent Ranges for Various Section Sizes

Section Size	CE Range
0 to ½ in. (0 to 13 mm)	4.4 to 4.6
½ to 2 in. (13 to 51 mm)	4.3 to 4.6
Over 2 in. (51 mm)	4.3 to 4.5

content in the base metal, the part configuration and the austempering process used. The proper alloy composition should be determined jointly by the foundry and the heat treating source. Addition of alloying elements when not required does not enchance the properties of ADI and merely adds to the cost of the iron. Composition guidelines are recommended in Table X1.2 and Table X1.3.

X1.3.1 Other nodulizing elements like beryllium, calcium, strontium, barium, yttrium, lanthanum and cerium should be present only to the extent that they are used to replace Mg in treatment. The amount of residual Mg plus the amounts of these elements should not exceed 0.06%. Carbide forming elements (like Cr, Ti , V) tend to be additive in effect with Mn and/or Mo; thus, one should take note of this in alloy design to avoid the formation of carbides in the casting.

X1.3.2 The preceding guidelines are intended to be useful parameters for production. Good ADI can, and is, being produced from ductile iron not meeting these criteria, however,

TABLE X1.2 Suggested Targets and Control Ranges for Intentionally Added Elements

Element	Recommended Range
Carbon Carbon should be controlled within the recommended range except when deviations are required to produce a defect-free casting. If too high levels of carbon are present, carbon flotation can occur and reduce the apparent strength levels of ADI.	3.60 % ± 0.20 %
Silicon Silicon is one of the most important elements in ADI because it promotes graphite formation, decreases the solubility of carbon in austenite, increases the eutectoid temperature and inhibits the formation of bainitic carbide. Excessively high levels of Si can suppress ausferrite in localized areas by stabilizing ferrite.	2.50 % ± 0.20 %
Magnesium Magnesium is added to create the conditions for graphite nodules to form. Excessively high levels will promote carbide formation while low levels promote nonspheroidal graphite.	(% S x 0.76) + 0.025 % ± 0.005 %
Manganese Manganese additions above that of the base metal composition are not recommended because Mn segregates to the last to freeze regions of the casting and will retard the formation of ausferrite if the nodule count is not sufficiently high to break up the Mn segregated region. In section sizes up to ½ in. or 13 mm, Mn targets as high as 0.60 % have been used due to high nodule counts. In section sizes over ½ in. (13 mm) or in the presence of Mo other carbide formers, the Mn target should be reduced to 0.35 % or less to minimize the formation of cell boundary carbides which may negatively affect component machinability or ductility, or both.	0.35% ± 0.05 %
Copper Copper may be added to ADI to increase hardenability in additions up to 0.80 %. Above this level, Cu creates a diffusion barrier around the graphite nodules, thus inhibiting carbon mobility during austenitizing.	0.80 % maximum, only as needed ± 0.05 %
Nickel Nickel may be used to increase the hardenability of ductile iron in additions up to 2.0 %. Because of the costs associated with the use of Ni, larger additions may be cost prohibitive.	2.0 % maximum, only as needed ± 0.10 %
Molybdenum Molybdenum is the most potent hardenability agent in ADI and may be necessary in heavy section castings to prevent the formation of pearlite. Both tensile strength and ductility decrease as the Mo content increases beyond that required for hardenability. This deterioration in properties is likely caused by the segregation of Mo to cell boundaries and the formation of carbides. The level of Mo should be restricted to not more than 0.30 % in heavy section castings.	0.30 % maximum (only as needed) ± 0.03 %

Copyright ASTM International
Provided by IHS under license with ASTM
No reproduction or networking permitted without license from IHS
Copyright by ASTM Int'l (all rights reserved);
Reproduction authorized per License Agreement with Monique Tyree (ASTMIHS Account); Mon Feb 27 12:18:54 EST 2006
Not for Resale

TABLE X1.3 Suggested Targets and Control Ranges for Trace or Tramp Elements

Trace or Tramp Elements	Suggested Target (or maximum)	Typical Control Range
Sn Tin	0.02% maximum	± 0.003 %
Sb Antimony	0.002% maximum	± 0.0003 %
P Phosphorus	0.04% maximum	
S Sulfur	0.02% maximum	
O Oxygen	50 ppm maximum	
Cr Chromium	0.10% maximum	
Ti Titanium	0.040 % maximum	
V Vanadium	0.10% maximum	
Al Aluminium	0.050% maximum	
As Arsenic	0.020% maximum	
Bi Bismuth	0.002% maximum	
B Boron	0.0004% maximum	
Cd Cadmium	0.005% maximum	
Pb Lead	0.002% maximum	
Se Selenium	0.030% maximum	
Te Tellurium	0.003% maximum	

these criteria represent sound, commercial practices known to produce good results. They do not constitute a guarantee of final properties.

X1.4 Machining of tension test specimens after austempering may be difficult, particularly for the higher strength grades. For this reason, some manufacturers prefer to machine the test bars to size or near net size (with some final grinding allowances) before the austempering operation. (**Warning—** Achieving the required mechanical properties and austempered microstructure in the smaller cross sections of a premachined test bar does not ensure the correct response in the heavier sections of actual parts, as explained in X1.1. When premachined test bars are to be used, it is recommended that adequate austempering be verified. This can be done by sectioning a casting, examining the microstructure in that section, and then comparing the results with that of a premachined test bar that has been austempered in the same furnace load. When inadequate austempering response is identified, increased alloying as discussed in X1.3 may be required.)

X2. Y-BLOCK SELECTION

X2.1 Table X2.1 provides guidelines for the selection of Y-blocks that have cooling rates that are representative of equivalent shapes having the dimensions shown.

TABLE X2.1 Equivalent Geometric Shapes Corresponding to Y-Blocks[A]

Y-Block Size, in. [mm]	Infinite Plate Thickness, in. [mm]	Round Diameter, in. [mm]	Cube Edge, in. [mm]
0.5 [13]	0.5 [13]	1.2 [30]	1.8 [46]
1.0 [25]	0.9 [22]	1.8 [46]	2.8 [72]
3.0 [76]	1.6 [40]	3.1 [80]	4.8 [120]

[A] For castings with cross sections that would require a Y-block greater than 3 in. [76mm], alloy requirements must be based upon experimental trials with test castings or previous experience with similar parts. Test coupons should be selected upon agreement between the producer and the purchaser.

ASTM International takes no position respecting the validity of any patent rights asserted in connection with any item mentioned in this standard. Users of this standard are expressly advised that determination of the validity of any such patent rights, and the risk of infringement of such rights, are entirely their own responsibility.

This standard is subject to revision at any time by the responsible technical committee and must be reviewed every five years and if not revised, either reapproved or withdrawn. Your comments are invited either for revision of this standard or for additional standards and should be addressed to ASTM International Headquarters. Your comments will receive careful consideration at a meeting of the responsible technical committee, which you may attend. If you feel that your comments have not received a fair hearing you should make your views known to the ASTM Committee on Standards, at the address shown below.

This standard is copyrighted by ASTM International, 100 Barr Harbor Drive, PO Box C700, West Conshohocken, PA 19428-2959, United States. Individual reprints (single or multiple copies) of this standard may be obtained by contacting ASTM at the above address or at 610-832-9585 (phone), 610-832-9555 (fax), or service@astm.org (e-mail); or through the ASTM website (www.astm.org).

Copyright ASTM International
Provided by IHS under license with ASTM
No reproduction or networking permitted without license from IHS
Copyright by ASTM Int'l (all rights reserved);
Reproduction authorized per License Agreement with Monique Tyler (ASTMIHS Account); Mon Feb 27 12:18:54 EST 2006
Not for Resale