Designation: A 804/A 804M – 04

Standard Test Methods for Alternating-Current Magnetic Properties of Materials at Power Frequencies Using Sheet-Type Test Specimens[1]

This standard is issued under the fixed designation A 804/A 804M; the number immediately following the designation indicates the year of original adoption or, in the case of revision, the year of last revision. A number in parentheses indicates the year of last reapproval. A superscript epsilon (ε) indicates an editorial change since the last revision or reapproval.

1. Scope

1.1 These test methods cover the determination of specific core loss and peak permeability of single layers of sheet-type specimens tested with normal excitation at a frequency of 50 or 60 Hz.

NOTE 1—These test methods have been applied only at the commercial power frequencies, 50 and 60 Hz, but with proper instrumentation and application of the principles of testing and calibration embodied in the test methods, they are believed to be adaptable to testing at frequencies ranging from 25 to 400 Hz.

1.2 These test methods use calibration procedures that provide correlation with the 25-cm [250-mm] Epstein test.

1.3 The range of test magnetic flux densities is governed by the properties of the test specimen and by the available instruments and other equipment components. Normally, nonoriented electrical steels can be tested over a range from 8 to 16 kG [0.8 to 1.6 T] for core loss. For oriented electrical steels, the normal range extends to 18 kG [1.8 T]. Maximum magnetic flux densities in peak permeability testing are limited principally by heating of the magnetizing winding and tests are limited normally to a maximum ac magnetic field strength of about 150 Oe [12 000 A/m].

1.4 These test methods cover two alternative procedures as follows:

Test Method 1—Sections 6-12

Test Method 2—Sections 13-19

1.4.1 Test Method 1 uses a test fixture having (*1*) two windings that encircle the test specimen, and (*2*) a ferromagnetic yoke structure that serves as the flux return path and has low core loss and low magnetic reluctance.

1.4.2 Test Method 2 uses a test fixture having (*1*) two windings that encircle the test specimen, (*2*) a third winding located inside the other two windings and immediately adjacent to one surface of the test specimen, and (*3*) a ferromagnetic yoke structure which serves as the flux-return path and has low magnetic reluctance.

1.5 The values and equations stated in customary (cgs-emu and inch-pound) units or SI units are to be regarded separately as standard. Within this standard, SI units are shown in brackets except for the sections concerning calculations where there are separate sections for the respective unit systems. The values stated in each system may not be exact equivalents; therefore, each system shall be used independently of the other. Combining values from the two systems may result in nonconformance with this standard.

1.6 *This standard does not purport to address all of the safety concerns, if any, associated with its use. It is the responsibility of the user of this standard to establish appropriate safety and health practices and determine the applicability of regulatory limitations prior to use.*

2. Referenced Documents

2.1 *ASTM Standards:* [2]

A 34/A 34M Practice for Sampling and Procurement Testing of Magnetic Materials

A 340 Terminology of Symbols and Definitions Relating to Magnetic Testing

A 343/A 343M Test Method for Alternating-Current Magnetic Properties of Materials at Power Frequencies Using Wattmeter-Ammeter-Voltmeter Method and 25-cm Epstein Test Frame

A 677/A 677M Specification for Nonoriented Electrical Steel Fully Processed Types

A 683/A 683M Specification for Nonoriented Electrical Steel, Semiprocessed Types

A 876 Specification for Flat-Rolled, Grain-Oriented, Silicon-Iron Electrical Steel, Fully Processed Types

3. Terminology

3.1 *Definitions:*

3.1.1 *General*—The definitions of terms, symbols, and conversion factors relating to magnetic testing found in Definitions A 340 are used in these methods.

[1] These methods are under the jurisdiction of ASTM Committee A06 on Magnetic Properties and are the direct responsibility of Subcommittee A06.01 on Test Methods.

Current edition approved May 1, 2004. Published May 2004. Originally approved in 1982. Last previous edition approved in 1999 as A 804/A 804M – 99.

[2] For referenced ASTM standards, visit the ASTM website, www.astm.org, or contact ASTM Customer Service at service@astm.org. For *Annual Book of ASTM Standards* volume information, refer to the standard's Document Summary page on the ASTM website.

Copyright © ASTM International, 100 Barr Harbor Drive, PO Box C700, West Conshohocken, PA 19428-2959, United States.

Copyright ASTM International
Reproduced by IHS under license with ASTM
No reproduction or networking permitted without license from IHS
Not for Resale

3.2 *Definitions of Terms Specific to This Standard:*

3.2.1 *sheet specimen*—a rectangular specimen comprised of a single piece of material or paralleled multiple strips of material arranged in a single layer.

4. Significance and Use

4.1 *Materials Evaluation*—These test methods were developed to supplement the testing of Epstein specimens for applications involving the use of flat, sheared laminations where the testing of Epstein specimens in either the as-sheared or stress-relief-annealed condition fails to provide the most satisfactory method of predicting magnetic performance in the application. As a principal example, the methods have been found particularly applicable to the control and evaluation of the magnetic properties of thermally flattened, grain-oriented electrical steel (Condition F5, Specification A 876) used as lamination stock for cores of power transformers. Inasmuch as the methods can only be reliably used to determine unidirectional magnetic properties, the methods have limited applicability to the testing of fully processed nonoriented electrical steels as normally practiced (Specification A 677/A 677M).

4.2 *Specification Acceptance*—The reproducibility of test results and the accuracy relative to the 25-cm [250-mm] Epstein method of test are considered such as to render the methods suitable for materials specification testing.

4.3 *Interpretation of Test Results*—Because of specimen size, considerable variation in magnetic properties may be present within a single specimen or between specimens that may be combined for testing purposes. Also, variations may exist in test values that are combined to represent a test lot of material. Test results reported will therefore, in general, represent averages of magnetic quality and in certain applications, particularly those involving narrow widths of laminations, deviations in magnetic performance from those expected from reported data may occur at times. Additionally, application of test data to the design or evaluation of a particular magnetic device must recognize the influence of magnetic circuitry upon performance and the possible deterioration in magnetic properties arising from construction of the device.

4.4 *Recommended Standard Tests*—These methods have been principally applied to the magnetic testing of thermally flattened, grain-oriented electrical steels at 50 and 60 Hz. Specific core loss at 15 or 17 kG [1.5 or 1.7 T] and peak permeability (if required) at 10 Oe [796 A/m] are the recommended parameters for evaluating this class of material.

5. Sampling

5.1 *Lot Size and Sampling*—Unless otherwise established by mutual agreement between the manufacturer and the purchaser, determination of a lot size and the sampling of a lot to obtain sheets for specimen preparation shall follow the recommendations of Practice A 34, Sections 4 and 5.

METHOD 1 TWO-WINDING YOKE-FIXTURE TEST METHOD

6. Basic Test Circuit

6.1 Fig. 1 provides a schematic circuit diagram for the test method. A power source of precisely controllable ac sinusoidal voltage is used to energize the primary circuit. To minimize flux-waveform distortion, current ratings of the power source and of the wiring and switches in the primary circuit shall be such as to provide very low impedance relative to the impedance arising from the test fixture and test specimen. Ratings of switches and wiring in the secondary circuit also shall be such as to cause negligible voltage drop between the terminals of the secondary test winding and the terminals of the measuring instruments.

7. Apparatus

7.1 The test circuit shall incorporate as many of the following components as are required to perform the desired measurements.

7.2 *Yoke Test Fixture*—Fig. 2 and Fig. 3 show line drawings of a single-yoke fixture and a double-yoke fixture, respectively. A double-yoke fixture is preferred in this method but a single-yoke fixture is permitted. Directions concerning the design, construction, and calibration of the fixture are given in 7.2.1, 7.2.2, Annex A1, and Annex A2.

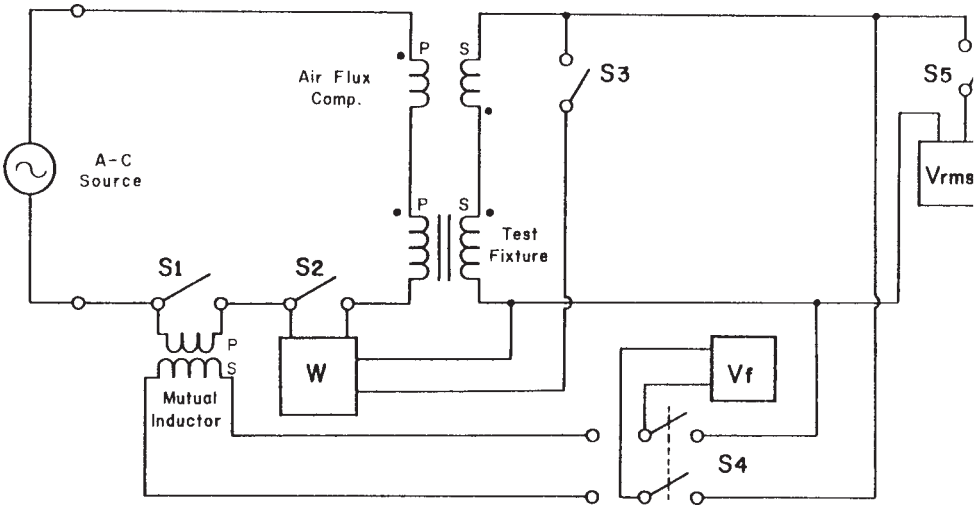

FIG. 1 Basic Circuit Diagram for Method 1

Copyright ASTM International
Reproduced by IHS under license with ASTM
No reproduction or networking permitted without license from IHS
Not for Resale

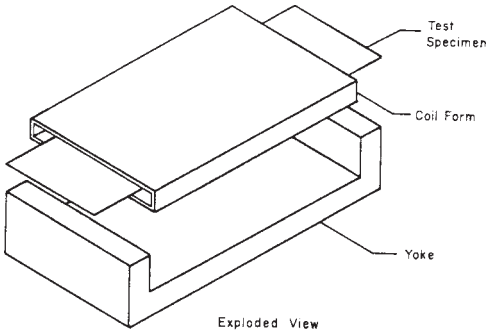

FIG. 2 Single-Yoke Fixture (Exploded View)

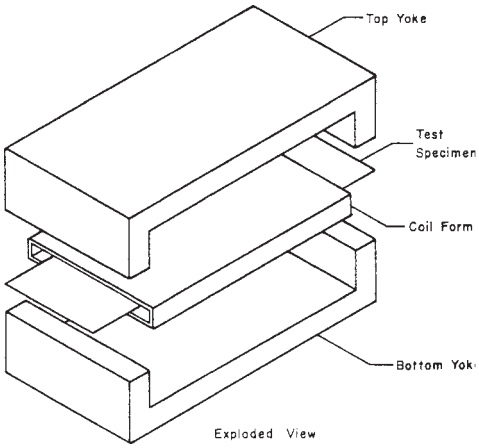

FIG. 3 Double-Yoke Fixture (Exploded View)

7.2.1 *Yoke Structure*—Various dimensions and fabrication procedures in construction are permissible. Since the recommended calibration procedure provides correlation with the 25-cm [250-mm] Epstein test, the minimum inside dimension between pole faces must be at least 22 cm [220 mm]. The thickness of the pole faces should be not less than 2.5 cm [25 mm]. It is recognized that pole faces as narrow as 1.9 cm [19 mm] are being used with nickel-iron yoke systems with good results. To minimize the influences of coil-end and pole-face effects, the yokes should be longer than the recommended minimum. For calibration purposes, it is suggested that the width of the fixture be such as to accommodate a specimen of at least 36-cm [360-mm] width which corresponds to the combined width of twelve Epstein-type specimens. Should the fixture width be less than 36 cm [360 mm], it will be necessary to test each calibration specimen in two parts and average the results.

7.2.2 *Test Windings*—The test windings, which shall consist of a primary (exciting) winding and a secondary (potential) winding, shall be uniformly and closely wound on a nonmagnetic, nonconducting coil form and each shall span the greatest practicable distance between the pole faces of the yoke fixture. It is recommended that the number of turns in the primary and secondary windings be equal. The number of turns may be chosen to suit the instrumentation, mass of specimen and test frequency. The secondary winding shall be the innermost winding and, with instrumentation of suitably high input resistance, normally may consist of a single layer. To reduce self-impedance and thereby minimize flux-waveform distortion, it is recommended that the primary winding consist of multiple layers of equal turns connected in parallel. The number of such layers should be optimized based on consideration of a reduction in winding resistance versus an increase in inductive reactance at the third harmonic of the principal test frequency used. The primary and secondary turns shall be wound in the same direction from a common starting point at one end of the coil form. Also, to minimize self-impedances of the windings, the opening in the coil form should be no greater than required to allow easy insertion of the test specimen. Construction and mounting of the test coil assembly must be such that the test specimen will be maintained without mechanical distortion in the plane established by the pole faces of the yoke(s) of the test fixture.

7.3 *Air-Flux Compensator*—To provide a means of determining intrinsic induction in the test specimen, an air-core mutual inductor shall constitute part of the test-coil system. The respective primary and secondary windings of the air-core inductor and the test-specimen coil shall be connected in series and the voltage polarities of the secondary windings shall be in opposition. By proper adjustment of the mutual inductance of the air-core inductor, the average of the voltage developed across the combined secondary windings is proportional to the intrinsic induction in the test specimen. Directions for construction and adjustment of the air-core mutual inductor for air-flux compensation are found in Annex A3.

7.4 *Flux Voltmeter, V_f*—A full-wave, true-average voltmeter, with scale reading in average voltage times 1.111 so that its indications will be identical with those of a true rms voltmeter on a pure sinusoidal voltage, shall be provided for evaluating the peak value of the test magnetic flux density. To produce the estimated precision of test under this method, the full-scale meter errors shall not exceed 0.25 % (Note 2). Meters of 0.5 % or more error may be used at reduced accuracy. Either digital or analog flux voltmeters are permitted. The normally high input impedance of digital voltmeters is desirable to minimize loading effects and to reduce the magnitude of instrument loss compensations. The input resistance of an analog flux voltmeter shall not be less than 1000 Ω/V of full-scale indication. A resistive voltage divider, a standard-ratio transformer, or other variable scaling device may be used to cause the flux voltmeter to indicate directly in units of magnetic flux density if the combination of basic instrument and scaling device conforms to the specifications stated above.

NOTE 2—Inaccuracies in setting the test voltage produce percentage errors approximately two times as large in the specific core loss. Care should also be taken to avoid errors caused by temperature and frequency effects in the instrument.

7.4.1 If used with a mutual inductor as a peak ammeter at magnetic flux densities well above the knee of the magnetization curve, the flux voltmeter must be capable of accurately measuring the extremely nonsinusoidal (peaked) voltage that is induced in the secondary winding of the mutual inductor. Additionally, if so used, an analog flux voltmeter should have an input resistance of 5000 to 10 000 Ω/V of full-scale indication.

7.5 *RMS Voltmeter, V_{rms}*—A true rms-indicating voltmeter shall be provided for evaluating the form factor of the voltage

Copyright ASTM International
Reproduced by IHS under license with ASTM
No reproduction or networking permitted without license from IHS
Not for Resale

induced in the secondary winding of the test fixture and for evaluating the instrument losses. The accuracy of the rms voltmeter shall be the same as that specified for the flux voltmeter. Either digital or analog rms voltmeters are permitted. The normally high input impedance of digital voltmeters is desirable to minimize loading effects and to reduce the magnitude of instrument loss compensations. The input resistance of an analog rms voltmeter shall not be less than 500 Ω/V of full-scale indication.

7.6 *Wattmeter, W*—The full-scale accuracy of the wattmeter must be better than ±0.25 % at the frequency of test and at unity power factor. The power factor encountered by a wattmeter during a core loss test on a specimen is always less than unity and, at magnetic flux densities far above the knee of the magnetization curve, approaches zero. The wattmeter must maintain adequate accuracy (better than ±1 % of reading) even at the most severe (lowest) power factor that is presented to it. Variable scaling devices may be used to cause the wattmeter to indicate directly in units of specific core loss if the combination of basic instrument and scaling devices conforms to the specifications stated here.

7.6.1 *Electrodynamometer Wattmeter*—A reflecting-type dynamometer is recommended among this class of instruments, but, if the specimen mass is sufficiently large, a direct-indicating electrodynamometer wattmeter of the highest available sensitivity and lowest power-factor capability may be used.

7.6.1.1 The sensitivity of the electrodynamometer wattmeter must be such that the connection of the potential circuit of the wattmeter, during testing, to the secondary winding of the test fixture does not change the terminal voltage of the secondary by more than 0.05 %. Also, the resistance of the potential circuit of the wattmeter must be sufficiently high that the inductive reactance of the potential coil of the wattmeter in combination with the leakage reactance of the secondary circuit of the test fixture does not result in appreciable defect angle errors in the measurements. Should the impedance of this combined reactance at the test frequency exceed 1 Ω per 1000 Ω of resistance in the wattmeter-potential circuit, the potential circuit must be compensated for this reactance.

7.6.1.2 The impedance of the current coil of the electrodynamometer wattmeter should not exceed 1 Ω. If flux waveform distortion otherwise tends to be excessive, this impedance should be not more than 0.1 Ω. The rated current-carrying capacity of the current coil must be compatible with the maximum rms primary current to be encountered during core-loss testing. Preferably the current-carrying capacity should be at least 10 rms amperes.

7.6.2 *Electronic Digital Wattmeter*—Electronic digital wattmeters have been developed that have proven satisfactory for use under the provisions of this test method. Usage of a suitable electronic digital wattmeter is permitted as an alternative to an electrodynamometer wattmeter in this test method. An electronic digital wattmeter oftentimes is preferred in this test method because of its digital readout and its capability for direct interfacing with electronic data acquisition systems.

7.6.2.1 The voltage input circuitry of the electronic digital wattmeter must have an input impedance sufficiently high that connection of the circuitry, during testing, to the secondary winding of the test fixture does not change the terminal voltage of the secondary by more than 0.05 %. Also the voltage input circuitry must be capable of accepting the maximum peak voltage that is induced in the secondary winding during testing.

7.6.2.2 The current input circuitry of the electronic digital wattmeter must have an input impedance of no more than 1 Ω. Preferably the input impedance should be no more than 0.1 Ω if the flux waveform distortion otherwise tends to be excessive. Also the current input circuitry must be capable of accepting the maximum rms current and the maximum peak current drawn by the primary winding of the test fixture when core loss tests are being performed. In particular, since the primary current will be very nonsinusoidal (peaked) if core-loss tests are performed on a specimen at magnetic flux densities above the knee of the magnetization curve, the crest factor capability of the current input circuitry should be three or more.

7.7 *Devices for Peak-Current Measurement*—A means of determining the peak value of the exciting current is required if an evaluation of peak permeability is to be made by the peak-current method.

7.7.1 An air-core mutual inductor and a flux voltmeter comprise the apparatus most frequently used to measure peak exciting current. Use of this apparatus is based on the same theoretical considerations that indicate the use of a flux voltmeter on the secondary of the test fixture to measure the peak magnetic flux density; namely, that when a flux voltmeter is connected to a test coil, the flux voltmeter indications are proportional to the peak value of the flux linking the coil. In the case of an air-core mutual inductor, the peak value of flux (and hence the indications of the flux voltmeter connected to its secondary winding) will be proportional to the peak value of its primary current. A mutual inductor used for this purpose must have reasonably low primary impedance so that its insertion will not materially affect the primary circuit conditions and yet must have sufficiently high mutual inductance to provide a satisfactorily high voltage to the flux voltmeter for primary currents corresponding to the desired range in peak magnetic field strength. The mutual inductor secondary impedance should be low if any significant secondary current is drawn by a low impedance flux voltmeter. The addition of the flux voltmeter should not change the mutual inductor secondary terminal voltage by more than 0.25 %. It is important that the mutual inductor be located in the test equipment in such a position that its windings will not be linked by ac leakage flux from other apparatus. Care should be taken to avoid locating it so close to any magnetic material or any conducting material that its calibration and linearity might be affected. Directions for construction and calibration of the mutual inductor for peak-current measurement are given in Annex A4.

7.7.2 *Peak-to-Peak Ammeter*—Even at commercial power frequencies, there can be appreciable error in the measurement of peak exciting current if winding capacitances and inductances and flux voltmeter errors begin to become important at some of the high-harmonic frequencies occasioned by the extremely nonsinusoidal character of the voltage waveform induced in the secondary of the mutual inductor by the nonsinusoidal exciting-current waveform. In such cases, the

Copyright ASTM International
Reproduced by IHS under license with ASTM
No reproduction or networking permitted without license from IHS
Not for Resale

peak-current measurement may be made with a voltmeter whose indications are proportional to the peak-to-peak value of the voltage drop across a low value of standard resistance connected in series with the primary winding of the test fixture. This peak-to-peak-reading voltmeter should have a nominal full-scale accuracy of better than ±3 % at the test frequency and be able to accommodate voltages with a crest factor of up to approximately 5. Care must be exercised that the standard resistor (usually in the range from 0.1 to 1.0 Ω) carrying the exciting current has adequate current-carrying capacity and is accurate to at least 0.1 % in value. It must have negligible temperature and frequency dependence under the conditions applying in this method. If desired, the value of the resistor may be such that the peak-reading voltmeter indicates directly in terms of peak magnetic field strength provided that the resistor conforms to the limitations stated previously. Normally this resistor will replace the mutual inductor in the circuit of Fig. 1 and the shorting switch, S_1, is used to remove this extra resistance from the primary circuit when not in use.

7.8 *Power Supply*—A precisely controllable source of sinusoidal test voltage with sufficient current and voltage capability, low internal impedance, and excellent stability is mandatory. Voltage amplitude and frequency stability should be maintained within ±0.1 %. Electronic power sources using negative feedback from the secondary winding of the test fixture to reduce flux waveform distortion have been found to perform quite satisfactorily in this test method.

8. Specimen Preparation

8.1 The type of test fixture and its dimensions govern the dimensions of permissible test specimens. The minimum length of a specimen shall be no less than the outside dimension of the distance between pole faces of the test fixture. With a double-yoke fixture, the amount of projection of the specimen beyond the pole faces is not critical but should be no longer than necessary for convenient loading and unloading of the specimen. For a single-yoke fixture, the length of the specimen must equal the length of the specimens used in calibration of the fixture. This length preferably is the minimum permissible length. For maximum accuracy, the specimen width should, as nearly as practicable, be the maximum that can be accommodated by the opening of the test coil. As a minimum, it is recommended that the specimen width be at least one half of the maximum width that can be accommodated by the test coil.

8.2 The specimens shall be sheared as rectangular as practicable to a length tolerance not exceeding ±0.1 %. Excessive burr and mechanical distortion are to be avoided in the shearing operation. For tests of grain-oriented electrical steel parallel to the direction of rolling, the angular deviation of the specimen length axis from the rolling direction shall not exceed 1.0°.

8.3 Where it is desirable to minimize the effects of slitting or shearing strains on the magnetic properties of an as-sheared test specimen, minimum width shall not be less than 100 mm.

8.4 Unless otherwise agreed upon between the producer and the user, it is recommended that sufficient specimens be prepared so as to represent substantially the entire width of the sheet samples taken from a test lot. If such samples are of less than optimum width (see 8.1), the samples should be of sufficient length that consecutive specimens may be prepared for testing in a paralleled, single-layer configuration.

9. Procedure

9.1 *Initial Determinations*—Before testing, check length of each specimen for conformity within ±0.1 % of the desired length. Discard specimens showing evidence of mechanical abuse. Weigh and record the mass of each specimen to an accuracy of ±0.1 %.

9.2 *Specimen Loading*—When loaded into the test fixture, the test specimen must be centered on the longitudinal and transverse axes of the test coil. When using a single-yoke fixture, sufficient pressure from nonmagnetic weights shall be used to bring the specimen into close contact with the pole faces of the yoke.

9.3 *Demagnetization*—The specimen should be demagnetized before measurements of any magnetic property are made. With the required apparatus connected as shown in Fig. 1 and with switches S_1 and S_2 closed, S_4 closed to the test fixture side, and S_3 and S_5 open, accomplish this demagnetization by initially applying a voltage from the power source to the primary circuit that is sufficient to magnetize the specimen to a magnetic flux density above the knee of its magnetization curve (magnetic flux density may be determined from the reading of the flux voltmeter by means of the equation of 10.1 or the equation of 11.1) and then decrease the voltage slowly and smoothly (or in small steps) to a very low magnetic flux density. After this demagnetization, test promptly for the desired test points. When multiple test points are required, perform the test in order of increasing magnetic flux density values.

9.4 *Setting Magnetic Flux Density*—With switches S_1 and S_3 closed, S_4 closed to the test fixture side, and S_2 and S_5 open, increase the voltage of the power supply until the flux voltmeter indicates the value of voltage calculated to give the desired test magnetic flux density in accordance with the equation of 10.1 or the equation of 11.1. Because the action of the air-flux compensator causes a voltage equal to that which would be induced in the secondary winding by the air flux to be subtracted from that induced by the total flux in the secondary, the magnetic flux density calculated from the voltage indicated by the flux voltmeter will be the intrinsic induction, B_i. In most cases, the values of intrinsic induction, B_i, are not sufficiently different from the corresponding values of normal induction, B, to require that any distinction be made. Where $\Gamma_m H_p$ is no longer insignificantly small compared to B_i, as at very high magnetic flux densities, determine the value of B by adding to B_i either the measured value of $\Gamma_m H_p$ or a nominal value known to be reasonably typical of the class of material being tested.

9.5 *Core Loss*—When the voltage indicated by the flux voltmeter has been adjusted to the desired value, read the wattmeter. Some users, particularly those having wattmeters compensated for their own losses (or burden), will desire to open switch S_4 before reading the wattmeter to eliminate the flux voltmeter burden from the wattmeter indication. Others will likely choose to have S_4 and S_5 closed when measuring the losses, so that all instruments may be read at the same time. In the latter case, the combined resistance load of the flux

Copyright ASTM International
Reproduced by IHS under license with ASTM
No reproduction or networking permitted without license from IHS
Not for Resale

voltmeter, rms voltmeter, and potential circuit of the wattmeter will constitute the total instrument burden on the wattmeter. Exercise care so that the combined current drain of the instruments does not cause an appreciably large voltage drop in the secondary circuit impedance of the test fixture. In such a case, the true magnetic flux density in the specimen may be appreciably higher than is apparent from the voltage measured at the secondary terminals of the test fixture. In any event, power as a result of any current drain in the secondary circuit at the time of reading the wattmeter must be known so it can be subtracted from the wattmeter indication to obtain the net watts caused by core loss.

9.6 *Specific Core Loss*—Obtain the specific core loss of the specimen in watts per unit mass at a specified frequency by dividing the net watts by that portion of the mass of the specimen constituting the active magnetic flux path in the specimen. Equations and instructions for computing the active mass of the specimen and the specific core loss are given in 10.2 and 11.2.

9.7 *Secondary RMS Voltage*—Read the rms voltmeter with the switch S_4 closed to the test fixture side, switch S_5 closed, and the voltage indicated by the flux voltmeter adjusted to the desired value. On truly sinusoidal voltage, both voltmeters will indicate the same value, showing that the form factor of the induced voltage is 1.111. When the voltmeters give different readings, the ratio of the rms value to the value indicated by the flux voltmeter reveals the amount by which the form factor of the induced voltage deviates from the desired value of 1.111. Determining the magnetic flux density from the reading of a flux voltmeter assures that the correct value of peak magnetic flux density is achieved in the specimen and, hence, that the hysteresis component of the core loss is correct even if the waveform is not strictly sinusoidal. However, the eddy-current component of the core loss (caused by current resulting from a nonsinusoidal voltage induced in the cross section of the strip) will be in error depending on the deviation of the induced voltage from the desired sinusoidal wave shape. This error in the eddy-current component of loss can be readily corrected by calculations based on the observed form factor and the approximate percentage of eddy-current loss for the grade of material being tested if the correction is reasonably small. The equations involved in determining this correction are given in 10.3 and 11.3.

9.8 *Peak Current*:

9.8.1 *Mutual Inductor*—When peak permeability at a given peak magnetic field strength is required, open S_1 to insert the primary of the mutual inductor, close S_2 to protect the wattmeter from the possibility of excessive current, open S_3 and S_5 to minimize secondary loading, and close S_4 toward the mutual-inductor side. Then adjust the voltage of the power supply such that the flux voltmeter indicates that the necessary value of the peak exciting current (calculated using the equations of 10.4.1 and 10.5 or the equations of 11.4 and 11.5) has been established. At this point, throw S_4 towards the test-fixture side and observe on the flux voltmeter the value of flux volts induced in the secondary winding of the test fixture. The magnetic flux density corresponding to the observed flux volts may be computed using the equation of 10.1 or the equation of 11.1. The equation for determining peak permeability is given in 10.6 and in 11.6.

9.8.2 *Peak-Reading Voltmeter*—If the peak-reading voltmeter and standard resistor are used instead of the mutual inductor and flux voltmeter for determining peak current, follow the same procedure as in 9.8.1 except use S_4 only on the test-fixture side and adjust the voltage of the power supply such that the peak-reading voltmeter indicates that the necessary value of the peak exciting current (calculated using the equations of 10.4.2 and 10.5 or the equations of 11.4 and 11.5) has been established. The equation for determining peak permeability is given in 10.6 and in 11.6.

10. Calculations (Customary Units)

10.1 *Flux Voltage*—Calculate the flux voltage, E_f in volts, induced in the secondary winding of the test fixture corresponding to the desired intrinsic test induction in the test specimen from the equation as follows:

$$E_f = \sqrt{2}\pi B_i A N_2 f \times 10^{-8} \quad (1)$$

where:

B_i = maximum intrinsic induction, G;
A = effective cross-sectional area of the test specimen, cm^2;
N_2 = number of turns in secondary winding; and
f = frequency, Hz.

Cross-sectional area, A in square centimetres, of the test specimen is determined as follows:

$$A = m/\ell\delta \quad (2)$$

where:

m = total mass of specimen, g;
ℓ = actual length of specimen, cm; and
δ = standard assumed density of specimen material, g/cm^3.

NOTE 3—Information on standard assumed densities for commonly used magnetic materials can be found in Practice A 34/A 34M, Section 8.

10.2 *Specific Core Loss*—To obtain specific core loss in watts per unit mass of the specimen, power expended in the secondary of the test circuit and included in the wattmeter indication must be eliminated prior to dividing by the active mass of the specimen. The equation for calculating specific core loss, $P_c(B;f)$ in watts per pound, for a specified magnetic flux density, B, and frequency, f, is as follows:

$$P_{c(B;f)} = 453.6\,(N_1 P_c/N_2 - E^2/R)/m_1 \quad (3)$$

where:

P_c = core loss indicated by the wattmeter, W;
E = rms value of secondary voltage, V;
R = parallel resistance of wattmeter potential circuit and all other loads connected to the secondary circuit, Ω;
N_1 = number of turns in primary winding;
N_2 = number of turns in secondary winding; and
m_1 = active mass of specimen, g.

The active mass, m_1 in grams, of the specimen is determined as follows:

$$m_1 = \ell_{1m/\ell} \quad (4)$$

Copyright ASTM International
Reproduced by IHS under license with ASTM
No reproduction or networking permitted without license from IHS
Not for Resale

where:

ℓ_1 = effective core-loss path length as determined by the calibration procedures of Annex A2, cm;
m = total mass of specimen, g; and
ℓ = actual length of specimen, cm.

10.3 *Form Factor Correction* —When the percent error in form factor exceeds ±1.0 %, the specific core loss shall be corrected to determine the value that would be obtained under sinusoidal-flux test conditions (Note 4). The percent error in form factor is given by the equation as follows:

$$\%\ \text{error in}\ ff = (100E/E_f) - 100 \quad (5)$$

Corrected specific core loss is obtained from the equation:

$$\text{Corrected}\ P_{c(B;f)} = 100\ (\text{observed}\ P_{c(B;f)}/(h + Ke) \quad (6)$$

where:

observed $P_{c(B;f)}$ = specific core loss calculated in 10.2;
h = percent hysteresis loss at magnetic flux density, B, and frequency, f;
e = percent eddy loss at magnetic flux density, B, and frequency, f; and
K = $(E/E_f)^2$.

Obviously, $h = 100 - e$ if residual losses are considered negligible. When the form-factor error is small, the values of h and e are not critical. The values of e commonly used for electrical steels are given in Table 1. Test conditions resulting in a form-factor error in excess of 10 % are to be avoided because even the corrected core loss is apt to be in error by an excessive amount.

NOTE 4—A discussion of assumptions underlying the correction of core loss for form-factor error can be found in Test Method A 343/A 343M, Section 6.3.

10.4 *Peak Current*:

10.4.1 The peak exciting current, I_p in amperes, may be computed from measurements made using the mutual inductor as follows:

$$I_p = \frac{\sqrt{2}}{2\pi} E_{fm}/f L_m \quad (7)$$

where:

E_m = flux volts induced in secondary winding of mutual inductor;
f = frequency, Hz; and
L_m = mutual inductance of mutual inductor as determined by the calibration procedures of Annex A4, H.

10.4.2 The peak exciting current, I_p in amperes, may be computed from measurements made using the standard resistor and peak-reading voltmeter as follows:

$$I_p = E_{p-p}/2R_1 \quad (8)$$

$E_{p\text{-}p}$ = peak-to-peak voltage indicated by peak reading voltmeter, V and
R_1 = resistance of standard resistor, Ω.

10.5 *Peak Magnetic Field Strength*—The peak magnetic field strength, H_p in oersteds, may be calculated as follows:

$$H_p = 0.4\pi\ N_1\ I_p/\ell_2 \quad (9)$$

where:

N_1 = number of turns in primary winding of test fixture;
I_p = peak exciting current, A; and
ℓ_2 = effective peak magnetic field strength path length as determined by calibration procedures of Annex A2, cm.

10.6 *Peak Permeability*—To obtain correspondence with dc determinations, H_p values for calculating peak permeability are customarily determined only at magnetic flux densities that are sufficiently above the knee of the magnetization curve that the core-loss component of exciting current has negligible influence on the peak value of exciting current. Relative peak permeability,μ_p, is determined as follows:

$$\text{Relative}\ \mu_p = B_i/\Gamma_m H_p \quad (10)$$

where:

B_i = intrinsic induction, G;
H_p = peak magnetic field strength, Oe; and
Γ_m = 1 G/Oe.

NOTE 5—For convenience in calculation of peak permeability, the value of B_i (intrinsic induction) is used instead of B (normal induction) under most circumstances of testing. This entails no loss of accuracy until H_p becomes appreciable in magnitude relative to B_i. If greater accuracy is required, B (equal to $B_i + H_p$) should be used in place of B_i in the permeability equation of 10.6.

10.7 *Averaging of Test Data*—If the reporting of data for a test lot requires averaging of data on test specimens of different widths and if the data vary substantially in value, weighted averaging of the test values shall be used. Weighted averaging is achieved as follows:

$$\text{Weighted average} = (W_1X_1 + W_2X_2 + ...)/(W_1 + W_2 + ...) \quad (11)$$

TABLE 1 Assumed Percent Eddy-Current Loss Applicable at 50 or 60 Hz

Material	Specimen	Assumed Percent Eddy-Current Loss, for Strip Thicknesses in in. (mm) [A]						
		0.007 [0.18]	0.009 [0.23]	0.011 [0.27]	0.012 [0.30]	0.014 [0.35]	0.019 [0.47]	0.025 [0.64]
Nonoriented silicon steel [B]	parallel	...	...	...	...	25	35	45
Oriented silicon steel [C]	parallel	35	45	50	50	55	...	...

[A] Values were obtained by the frequency separation method in which the frequencies were not less than 25 Hz and not greater than 120 Hz.
[B] These eddy-current percentages were developed for and are appropriate for use with nonoriented silicon steels as described in Specifications A 677/A 677M and A 683/A 683M where (%SI + 1.7 × %Al) is in the range 1.40 to 3.70.
[C] These eddy-current percentages were developed for and are appropriate for use with oriented silicon steels as described in Specifications A 876.

Copyright ASTM International
Reproduced by IHS under license with ASTM
No reproduction or networking permitted without license from IHS
Not for Resale

where:
W = width of an individual test specimen and
X = test value for an individual specimen.

11. Calculation (SI Units)

11.1 *Flux Voltage*—Calculate the flux voltage, E_f in volts, induced in the secondary winding of the test fixture corresponding to the desired intrinsic test induction in the test specimen as follows:

$$E_f = \sqrt{2}\pi\, B_i A N_2 f \quad (12)$$

where:
B_i = maximum intrinsic flux density, T;
A = effective cross-sectional area of the test specimen, m^2;
N_2 = number of turns in secondary winding; and
f = frequency, Hz.

Cross-sectional area, A in square metres, of the test specimen is determined as follows:

$$A = m/\ell\delta \quad (13)$$

where:
m = total mass of specimen, kg;
ℓ = actual length of specimen, m; and
δ = standard assumed density of specimen material, kg/m^3.

NOTE 6—Information on standard assumed densities for commonly used magnetic materials can be found in Practice A 34/A 34M, Section 8.

11.2 *Specific Core Loss*—To obtain specific core loss in watts per unit mass of the specimen, power expended in the secondary of the test circuit and included in wattmeter indication must be eliminated before dividing by the active mass of the specimen. The equation for calculating specific core loss, $P_{c(B;f)}$in watts per kilogram, for a specified magnetic flux density, B, and frequency, f, is as follows:

$$P_{c(B;f)} = (N_1 P_c/N_2 - E^2/R)/m_1 \quad (14)$$

where:
P_c = core loss indicated by the wattmeter, W;
E = rms volts for the secondary circuit;
R = parallel resistance of wattmeter potential circuit and all other loads connected to the secondary circuit, Ω;
N_1 = number of turns in primary winding;
N_2 = number of turns in secondary winding; and
m_1 = active mass of specimen, kg.

The active mass, m_1 in kilograms, of the specimen is determined as follows:

$$m_1 = \ell_1 m/\ell \quad (15)$$

where:
ℓ_1 = effective core-loss path length as determined by the calibration procedures of Annex A2, m;
m = total mass of specimen, kg; and
ℓ = actual length of specimen, m.

11.3 *Form-Factor Correction*—See 10.3.

11.4 *Peak Current*—See 10.4.

11.5 *Peak Magnetic Field Strength*—The peak magnetic field strength, H_p in amperes per metre, may be calculated as follows:

$$H_p = N_1 I_p/\ell_2 \quad (16)$$

where:
N_1 = number of turns in primary winding of test fixture;
I_p = peak exciting current, A; and
ℓ_2 = effective peak magnetic field strength path length as determined by calibration procedures of Annex A2, m.

11.6 *Peak Permeability*—To obtain correspondence with dc determinations, H_p values for calculating peak permeability are customarily determined only at magnetic flux densities that are sufficiently above the knee of the magnetization curve that the core-loss component of exciting current has negligible influence on the peak value of exciting current. Relative peak permeability, μ_p, is determined as follows:

$$\text{Relative } \mu_p = B_i/\Gamma_m H_p \quad (17)$$

where:
B_i = intrinsic induction, T;
H_p = peak magnetic field strength, A/m; and
Γ_m = $4\pi \times 10^{-7}$ H/m.

NOTE 7—For convenience in calculation of peak permeability, the value of B_i (intrinsic induction) is used instead of B (normal induction) under most circumstances of testing. This entails no loss of accuracy until $\Gamma_m H_p$ becomes appreciable in magnitude relative to B_i. If greater accuracy is required, B (equal to $B_i + \Gamma_m H_p$) should be used in place of B_i in the permeability equation of 11.6.

11.7 *Averaging of Test Data*—See 10.7.

12. Precision

12.1 For the recommended standard specific core loss tests (see 4.4), the precision is estimated to be ±2.0 %.

12.2 For the recommended standard peak permeability tests (see 4.4), the precision is estimated to be ±1.0 %.

METHOD 2 THREE-WINDING YOKE-FIXTURE TEST METHOD

13. Basic Test Circuit

13.1 Fig. 4 provides a block diagram for the test method. A power source of precisely controllable ac sinusoidal voltage is used to energize the primary circuit. To minimize flux waveform distortion in the primary circuit, current ratings of the power source and of the wiring and switches in the primary circuit shall be such as to provide very low impedance relative to the impedance arising from the test fixture and test specimen.

14. Apparatus

14.1 The test circuit shall incorporate as many of the following components as are required to perform the desired measurements.

14.2 *Yoke-Test Fixture*—Measurements of core loss and permeability may be made basically by a method capable of simultaneously sensing the magnetic field strength applied to the test specimen and the magnetic flux density in the test specimen. The construction of the test fixture must be such that a uniform magnetic field is produced in that volume of the magnetic material whose ac magnetic properties are to be measured. The magnetic field strength applied to the test

Copyright ASTM International
Reproduced by IHS under license with ASTM
No reproduction or networking permitted without license from IHS
Not for Resale

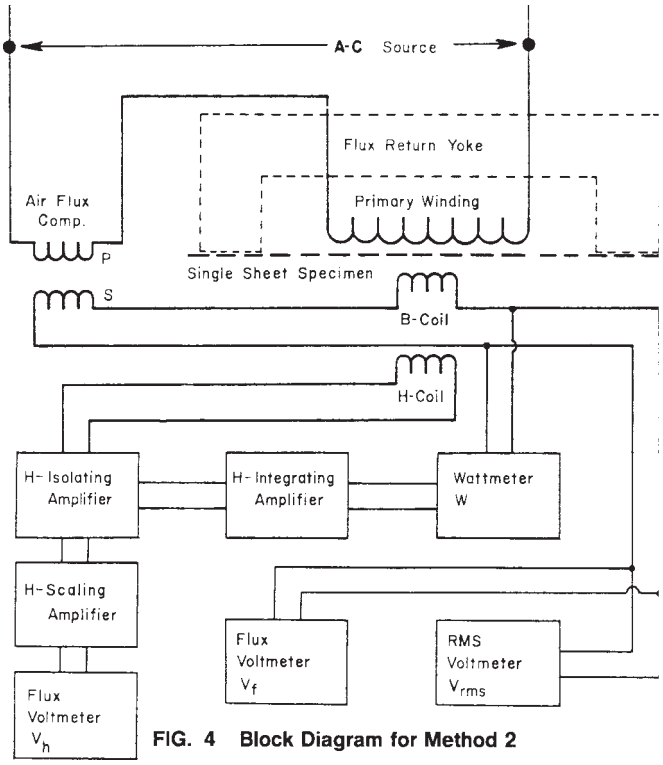

FIG. 4 Block Diagram for Method 2

specimen is measured directly by an air-core search winding. To perform this measurement accurately, this search winding must be as close to the specimen surface as possible. Also the variation in magnetic field strength along the direction parallel to the direction of magnetization must be kept as small as possible by using a long magnetizing winding relative to the search winding and by using a properly designed yoke structure. Fig. 2 shows a line drawing of a yoke fixture for this test method. Directions concerning the design, construction, and calibration of the fixture are given in 14.2.1, 14.2.2, Annex A1, and Annex A5.

14.2.1 A flux return yoke is provided to aid in achieving uniform magnetic flux density in the active volume of the test specimen. Various dimensions and fabrication procedures in construction are permissible. Since the recommended calibration procedure provides correlation with the 25-cm [250-mm] Epstein test, the minimum inside dimension between the pole faces must be at least 22 cm [220 mm]. The thickness of the pole faces should not be less than 2.5 cm [25 mm]. For calibration purposes, it is suggested that the width of the fixture be such as to accommodate a specimen of at least 36-cm [360-mm] width that corresponds to the combined width of twelve Epstein-type strips. Should the fixture width be less than 36 cm [360 mm], it will be necessary to test each calibration specimen in two parts and average the results.

14.2.2 The test windings shall consist of a primary (exciting) winding, a secondary (potential) winding, and a flat air-flux search winding (hereafter called the H-coil). The axis of each winding is to be parallel to the length of the test specimen. The number of turns in each winding may be chosen to best suit the intended test conditions. The primary and secondary windings shall be wound on a common nonmagnetic, nonconducting coil form that encircles the test specimen and the H-coil. The primary and secondary turns shall be wound in the same direction on the coil form. The secondary winding is to be inside the primary winding. The length of the secondary winding shall not be greater than the distance over which uniform flux density is achieved in the specimen. The primary winding shall span the greatest practicable distance between the pole faces of the yoke fixture. To reduce self-impedance and thereby minimize flux waveform distortion, the primary winding may consist of multiple layers of equal turns connected in parallel. The number of such layers should be optimized based on consideration of a reduction in winding resistance versus an increase in inductive reactance at the third harmonic of the principal test frequency used. To minimize self-impedances of the windings, the opening in the coil form for the primary and secondary windings should be no greater than required to allow installation of the H-coil and also permit easy insertion of the largest test specimen. The H-coil shall be uniformly and closely wound on a solid nonmagnetic, nonconducting coil form. The width of the H-coil should not be greater than the width of the narrowest specimen that is to be tested and preferably should be somewhat less. The length of the H-coil should be the same as that of the secondary winding. The height of the H-coil must be such that it can be fitted within the opening in the coil form for the primary and secondary windings. Mounting of the entire test-coil assembly must be such that the test specimen will be maintained without mechanical distortion in the plane established by the pole faces of the magnetic flux-return yoke.

14.3 *Air-Flux Compensator*—To provide a means of determining intrinsic induction in the test specimen, air flux compensation is desirable. The conventional method of connecting the respective primary and secondary windings of an air-core inductor and the test-specimen coil in series and the voltage polarities of the secondary windings in opposition, may be used. By proper adjustment of the mutual inductance of the air-core inductor, the average of the voltage developed across the combined secondary windings is proportional to the intrinsic induction in the test specimen. Directions for construction and adjustment of the air-core mutual inductor for air-flux compensation will be found in Annex A3. Air flux compensation also may be achieved by connecting a section of the H-coil in series opposition with the secondary winding of the test fixture.

14.4 *Flux Voltmeter, V_f*—See 7.4.

14.5 *RMS Voltmeter, V_{rms}*—See 7.5.

14.6 *Flux Voltmeter,V_h*—A full-wave, true average voltmeter with scale reading in average voltage times 1.111, so that its indications will be identical with those of a true rms meter on a pure sinusoidal voltage, shall be provided for evaluating the peak value of the magnetic field strength applied to the test specimen. To produce the estimated accuracy of test under this method, the full-scale meter errors shall not exceed 0.25 %. Meters of 0.5 % or more error may be used at reduced accuracy. Either digital or analog flux voltmeters are permitted. The normally high input impedance of digital flux voltmeters is

Copyright ASTM International
Reproduced by IHS under license with ASTM
No reproduction or networking permitted without license from IHS
Not for Resale

desirable to minimize loading effects. The resistance of an analog flux voltmeter shall not be less than 1000 Ω/V of full-scale indication.

14.7 *Wattmeter, W*—See 7.6.

14.8 *Secondary Winding (B-Coil) Signal Circuit*—When the test specimen is magnetized to the desired flux density, there should be enough turns in the B-coil to provide a voltage signal large enough for the signal to be measured and used to drive the potential circuit of the wattmeter without amplification. The B-coil voltage can then be measured and used as in Method 1. If, however, it is desired to make the equipment semiautomatic and provide waveform correction to obtain sinusoidal flux in the sample, stable, low-distortion amplifiers may be used for processing the B-coil voltage signal. The B-coil is connected across a precision high-impedance (megohms) voltage divider. The signal obtained from the voltage divider should be isolated from the associated circuits by an integrated circuit operational amplifier. The integrated circuit has a high input impedance (~1 MΩ) and low-output impedance (~1 Ω) enabling the amplifier to drive the associated circuits. The output signal of the isolation amplifier is filtered to remove the fundamental and then summed with a predetermined sine wave signal to provide the power supply with the negative feedback required for waveform correction. This signal is also supplied to precision potentiometers that may be used to multiply or divide the B signal in proportion to the mass and length parameters of the test sample. The B signal can also be summed with the H signal to obtain the B signal that is corrected for air flux in the B-coil. The corrected B signal can then be used to drive the wattmeter and the flux voltmeter. The forward gain of any given amplification stage should be maintained below ten to minimize drift and retain a high degree of stability. The selected system should be comprised of highly stable, low-drift components.

14.9 *H-Coil Signal Circuit*—The H-coil voltage is proportional to dH/dt and is normally too small to drive conventional instruments without amplification. The magnitude of the H-coil signal is proportional to the area turns of the H-coil that must be accurately determined. The space restrictions within the B-coil and the requirement that the H-coil be positioned in proximity to the test sample of necessity limits the area that the H-coil encloses. The input impedance and gain of the first stage of amplification must be carefully matched to the output voltage of the H-coil. The H-coil signal is isolated from the associated circuits by an integrated circuit precision instrumentation amplifier. This type of amplifier has a very high input impedance (hundreds of megohms) and utilizes dual inputs plus ground that is used for reducing common mode noise and for remote ground referencing. The amplifier is very stable and has a low-output impedance (~0.1 Ω) enabling the unit to drive several other circuits requiring the H signal. After isolation, the H-coil signal may be scaled and summed with the B-coil signal to correct for the air flux encircled by the B-coil. The signal may also be amplified and scaled to produce a measurable voltage whose rectified average value is proportional to the peak magnetic field strength applied to the test sample. To obtain a signal from the H-coil that can be used to drive the wattmeter, the voltage signal must be integrated, scaled, and matched to the wattmeter selected to measure the power loss of the sample. If the wattmeter is an electrodynamometer type, a current follower operational amplifier is used. If the wattmeter is an electronic watt converter, a conventional voltage amplifier with a high input impedance (megohms) is used. The forward gain of any amplification stage should be maintained below ten to minimize drift and retain a high degree of stability. The selected system should be comprised of highly stable, low-drift components that are now a state of the art in the electronics industry.

14.10 *Power Supply*—See 7.8.

15. Specimen Preparation

15.1 The type of test fixture and its dimensions govern the dimensions of permissible test specimens. The minimum length of a specimen shall be no less than the dimension between the outside edges of the pole faces of the yoke. The maximum theoretical accuracy is obtained when the specimen width is the maximum that can be accommodated by the test coils and the yoke. The minimum specimen width is determined by the width of the H-coil. The permissible width is determined by the calibration procedure described in Annex A5. If the precision limits of the test method (see 19.1 and 19.2) are not exceeded as the specimen width varies between the maximum and minimum widths determined by the test fixture, then the permissible widths of the test specimen are between these limits. If however the precision limits of the test method are exceeded as the specimen width varies, the permissible widths are only those widths that are within the precision limits.

15.2 The specimens shall be sheared as rectangular as practicable to a length tolerance not exceeding 0.1 %. Excessive burr and mechanical distortion are to be avoided in the shearing operation. For tests of grain-oriented electrical steel parallel to the direction of rolling, the angular deviation from the rolling direction produced by shearing shall not exceed 1.0°.

15.3 Where it is desirable to minimize the effects of slitting or shearing strains on the magnetic properties of an as-sheared test specimen, minimum width shall not be less than 100 mm.

15.4 Unless otherwise agreed upon between the producer and user, it is recommended that sufficient specimens be prepared so as to represent substantially the entire width of the sheet samples taken from a test lot. If such samples are of less than optimum width (see 15.1), the samples should be of sufficient length that consecutive specimens may be prepared for testing in a paralleled, single-layer configuration.

16. Procedure

16.1 *Initial Determinations*—See 9.1.

16.2 *Specimen Loading*—See 9.2.

16.3 *Demagnetization*—The specimens should be demagnetized before measurements of any magnetic property are made. With the required apparatus connected as shown in Fig. 4, accomplish this demagnetization by initially applying a voltage from the power supply to the primary circuit which is sufficient to magnetize the specimen to a magnetic flux density above the knee of its magnetization curve (magnetic flux density may be determined from the reading of the flux voltmeter by means of

Copyright ASTM International
Reproduced by IHS under license with ASTM
No reproduction or networking permitted without license from IHS
Not for Resale

the equation of 17.1 or the equation of 18.1) and then decrease the voltage slowly and smoothly (or in small steps) to a very low magnetic flux density. After this demagnetization, test promptly for the desired test point(s). When multiple test points are required, perform the tests in order of increasing magnetic flux density values.

16.4 *Setting Magnetic Flux Density*—Increase the voltage of the power supply to the primary winding until the flux voltmeter on the secondary winding indicates the value of the voltage calculated to give the desired test magnetic flux density in accordance with the equation of 17.1 or the equation of 18.2. In most cases, the values of the intrinsic induction, B_i, are not sufficiently different from the corresponding values of normal induction, B, to require that any distinction be made. In those instances where $\Gamma_m H_p$ is no longer insignificantly small compared to B_i as at very high magnetic flux densities, determine the value of B by adding to B_i the measured value of $\Gamma_m H_p$.

16.5 *Specific Core Loss*—When the voltage indicated by the flux voltmeter has been adjusted to the desired value, read the wattmeter. Exercise care that the combined current drain of the instruments connected to the secondary circuit of the test fixture does not cause an appreciably large voltage drop in the secondary circuit impedance. Instructions and equations for calculating specific core loss from the wattmeter reading are given in 17.2 and 18.2.

16.6 *Secondary RMS Voltage*—Measure the rms value of the secondary voltage with the voltage indicated by the flux voltmeter on the secondary circuit adjusted to the desired value. On truly sinusoidal voltage, both voltmeters will indicate the same value, showing that the form factor of the induced voltage is 1.111. When the voltmeters give different readings, the ratio of the rms value to the value indicated by the flux voltmeter reveals the amount by which the form factor of the induced voltage deviates from the desired value of 1.111. Determining the magnetic flux density from the readings of a flux voltmeter ensures that the correct value of peak magnetic flux density is achieved in the specimen and, hence, that the hysteresis component of the core loss is correct even if the waveform is not strictly sinusoidal. However, the eddy-current component of the core loss will be in error depending on the deviation of the induced voltage from the desired sinusoidal wave shape. This error in the eddy-current component of loss can be readily corrected by calculations based on the observed form factor and the approximate percentage of eddy-current loss for the grade of the material being tested if the correction is reasonably small. The equations involved in determining this correction are given in 17.3 and 18.3.

16.7 *Peak Magnetic Field Strength*—To permit determination of the peak magnetic field strength applied to the specimen, observe the reading of the flux voltmeter connected to the H-coil. The peak magnetic field strength may then be calculated from the equation of 17.4 or the equation of 18.4.

17. Calculations (Customary Units)

17.1 *Flux Voltage*—See 10.1.

17.2 *Specific Core Loss*—Calculate the specific core loss, $Pc_{c(B;f)}$ in watts per pound, for a specified magnetic flux density, B, and frequency, f, using the following equation:

$$P_{c(B;f)} = 3.610 \times 10^{10}\, K_1 \int P / G_1 G_2 N_2 N_3 A_{3m} \tag{18}$$

where:

K_1 = core loss calibration factor as determined by the calibration procedures of Annex A5;
ℓ = actual length of specimen, cm;
P = watts indicated by the wattmeter;
G_1 = voltage gain of H-isolation amplifier;
G_2 = integration constant of H-integrating amplifier, 1/s;
N_2 = number of turns in secondary winding;
N_3 = number of turns in H-coil;
A_3 = cross-sectional area of H-coil, cm ^{2}; and
m = total mass of specimen, g.

17.3 *Form Factor Correction*—See 10.3.

17.4 *Peak Magnetic Field Strength*—The peak magnetic field strength, H_p in oersteds, applied to the specimen is calculated as follows:

$$H_p = 2.251 \times 10^{7}\, K_2 E_h / G_1 G_3 A_3 N_3 f \tag{19}$$

where:

K_2 = peak magnetic field strength calibration factor as determined by the calibration procedures of Annex A5;
E_h = flux volts indicated by flux voltmeter connected to H-coil;
G_1 = voltage gain of H-isolation amplifier;
G_3 = voltage gain of H-scaling amplifier;
A_3 = effective cross-sectional area of the H-coil, cm ^{2};
N_3 = number of turns in H-coil; and
f = frequency, Hz.

17.5 *Peak Permeability—H—$_p$*values for calculating peak permeability are customarily determined only at magnetic flux densities that are well above the knee of the magnetization curve. Relative peak permeability is determined as follows:

$$\text{Relative } \mu_p = B_i / \Gamma_m H_p \tag{20}$$

where:

B_i = intrinsic induction, G;
H_p = peak magnetic field strength, Oe; and
Γ_m = 1 G/Oe.

NOTE 8—For convenience in calculation of peak permeability, the value of B_i (intrinsic induction) is used instead of B (normal induction) under most circumstances of testing. This entails no loss of accuracy until H_p becomes appreciable in magnitude relative to B_i. If greater accuracy is required, B (equal to $B_i + H_p$) should be used in place of B_i in the permeability equation of 17.5.

17.6 *Averaging of Test Data*—See 10.7.

18. Calculations (SI Units)

18.1 *Flux Voltage*—See 11.1.

18.2 *Specific Core Loss*—Calculate the specific core loss, $P_{c(B;f)}$ in watts per kilogram, for a specified magnetic flux density, B, and frequency, f, using the following equation:

$$P_{c(B;f)} = 7.958 \times 10^{5}\, K_1 \ell\, P / G_1 G_2 N_2 N_3 A_3 m \tag{21}$$

where:

K_1 = core loss calibration factor as determined by the calibration procedures of Annex A5;
ℓ = actual length of specimen, m;

--`,,`-`-`,,`,,`,`,,`---

Copyright ASTM International
Reproduced by IHS under license with ASTM
No reproduction or networking permitted without license from IHS
Not for Resale

P = watts indicated by the wattmeter;
G_1 = voltage gain of H-isolation amplifier;
G_2 = integration constant of H-integrating amplifier, l/s;
N_2 = number of turns in secondary winding;
N_3 = number of turns in H-coil;
A_3 = cross-sectional area of H-coil, m^2; and
m = total mass of specimen, kg.

18.3 *Form-Factor Correction*—See 17.3.

18.4 *Peak Magnetic Field Strength*—The peak magnetic field strength, H_p in amperes per metre, applied to the specimen is calculated as follows:

$$H_p = 1.791 \times 10^5 K_2 E_h / G_1 G_3 A_3 N_3 f \quad (22)$$

where:
K_2 = peak magnetic field strength calibrating factor as determined by the calibration procedures of Annex A5;
E_h = flux volts indicated by flux voltmeter connected to H-coil;
G_1 = voltage gain of H-isolation amplifier;
G_3 = voltage gain of H-scaling amplifier;
A_3 = effective cross-sectional area of the H-coil, m^2;
N_3 = number of turns in H-coil; and
f = frequency, Hz.

18.5 *Peak Permeability—H_p* values for calculating peak permeability are customarily determined only at magnetic flux densities that are well above the knee of the magnetization curve. Relative peak permeability is determined as follows:

$$\text{Relative } \mu_p = B_i / \Gamma_m H_p \quad (23)$$

where:
B_i = intrinsic induction, T;
H_p = peak magnetic field strength, A/m; and
Γ_m = $4\pi \times 10^{-7}$ H/m.

NOTE 9—For convenience in calculation of peak permeability, the value of B_i (intrinsic induction) is used instead of B (normal induction) under most circumstances of testing. This entails no loss of accuracy until $\Gamma_m H_p$ becomes appreciable in magnitude relative to B_i. If greater accuracy is required, B (equal to $B_i + \Gamma_m H_p$) should be used in place of B_i in the permeability equation of 18.5.

18.6 *Averaging of Test Data*—See 17.6.

19. Precision and Bias

19.1 The precision and bias of this test method have not been established by interlaboratory testing.

19.2 *Precision*:

19.2.1 For the recommended standard specific core loss tests (see 4.4), the precision is estimated to be ±2 %.

19.2.2 For the recommended standard peak permeability tests (see 4.4), the precision is estimated to be ±1.0 %.

19.3 *Bias*—Since there is no accepted reference material, method, or laboratory suitable for measuring the magnetic properties determined using this test method, no statement of bias is being made.

20. Keywords

20.1 alternating current; ammeter; core loss; magnetic; magnetic flux density; magnetic material; magnetic test; permeability; power frequency; sheet; wattmeter; voltmeter

ANNEXES

(Mandatory Information)

A1. CONSTRUCTION OF YOKE FIXTURES

A1.1 Grain-oriented electrical steels used in the preferred direction of orientation or nickel-iron alloys (approximately 50 % Ni-50 % Fe or 80 % Ni-20 % Fe) in thicknesses not exceeding 0.014 in. [0.35 mm] have proven successful as core materials for yoke construction. Typically, the grain-oriented electrical steels have been used in bent-core designs (Fig. A1.1), while the nickel-iron alloys lend themselves to either a bent-core design or the construction of yokes produced from punched laminations (Fig. A1.2). Most often they have been used in the latter.

A1.2 To avoid interlaminar losses, the individual laminations comprising the yoke must be electrically insulated from each other. Also, to provide the lowest losses and highest

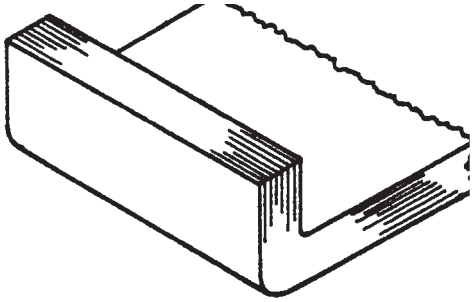

FIG. A1.1 Bent Core

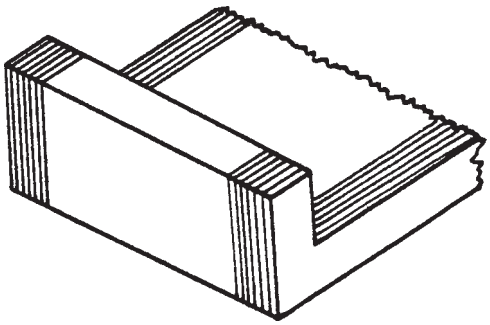

FIG. A1.2 Stacked Core

Copyright ASTM International
Reproduced by IHS under license with ASTM
No reproduction or networking permitted without license from IHS
Not for Resale

permeability in the yoke, the influence of fabricating strains must be minimized in construction or eliminated by suitable heat treatment of the laminations or yoke structure.

A1.3 Typical construction of a yoke from grain-oriented electrical steel involves the steps of bending laminations from thermally flattened materials (Condition F5, Specification A 876), stress-relief annealing and bonding the laminations together to form the yoke, machining the pole faces to be in a common plane, and lightly etching the pole faces to eliminate interlaminar shorting from the machining operation. Construction of a yoke from nickel-iron material customarily involves the steps of punching the laminations, heat treating to develop magnetic properties, insulating the laminations, bonding or clamping the laminations together to form the yoke structure, and lightly machining the pole faces to be in a common plane if required. Where the laminations are bonded, the bonding agent may also serve as surface insulation for the laminations.

A1.4 For either type of construction, the height of the vertical portions of the yoke should be no greater than required to accommodate the test winding structure. Mechanical means of opening the yoke structure to allow insertion and removal of the test specimen are needed in a double-yoke structure and a system that moves both yokes away from the test specimen is preferred to minimize wear of the pole faces.

A2. CALIBRATION OF YOKE FIXTURES FOR METHOD 1

A2.1 The specimens used to calibrate the yoke fixture shall consist of stress-relief-annealed strips typical of the grade of material that is to be tested in the fixture. If more than one grade is to be tested, specimens typical of each grade shall be used. At least five specimens of each grade are preferred. The number of strips in each specimen shall be an integer multiple of four and preferably should be at least twelve. The width of each strip shall be 3.0 cm [30 mm]. The minimum length of each specimen shall be no less than the outside dimension of the distance between the pole faces of the test fixture. With a double-yoke fixture, the amount of projection of the specimen beyond the pole faces is not critical, but should be no longer than necessary for convenient loading and unloading of the specimen. For a single-yoke fixture, the length of the specimens used in calibrating the fixture must equal the length of the normal test specimens.

A2.2 Each specimen shall be tested in a 25-cm [250-mm] Epstein frame per Test Method A 343/A 343M. The magnetic properties to be determined are those which the yoke fixture is to measure routinely when calibrated. Depending upon the length of the specimens, the tests may need to be made at more than one position along their length to permit evaluation of the average properties. The specimens, when substantially longer than the Epstein test frame, shall be supported to maintain an essentially stress-free state.

A2.3 Each specimen should be inserted into the yoke fixture in a paralleled single-layer configuration and tested. Tests are made by establishing the desired magnetic flux density and determining core loss, or peak exciting current, or both. If necessary, the core loss should be corrected for form factor error.

A2.4 When customary units are used, the effective core-loss path length, ℓ_1 in centimetres, of the fixture for a specimen at a specified frequency, *f*, and magnetic flux density, *B*, may be calculated as follows:

$$\ell_1 = 453.6\, P_c \ell / m P_{c(B;f)} \quad \text{(A2.1)}$$

where:

P_c = core loss by yoke fixture test, W;
ℓ = actual specimen length, cm;
m = total specimen mass, g; and
$P_{c\ (B;f)}$ = specific core loss by 25-cm [250-mm] Epstein test, W/lb.

A2.5 When SI units are used, the effective core-loss path length, ℓ_1 in metres, of the fixture for a specimen at a specified frequency, ℓ, and magnetic flux density, *B*, may be calculated as follows:

$$\ell_1 = P_c \ell / m P_{c(B;f)} \quad \text{(A2.2)}$$

where:

P_c = core loss by yoke fixture test, W;
ℓ = actual specimen length, m;
m = total specimen mass, kg; and
$Pc\ (B;f)$ = specific core loss by 25-cm [250-mm] Epstein test, W/kg.

A2.6 When customary units are used, the effective peak magnetic field strength path length, ℓ_2 in centimetres, of the fixture for a specimen at a specified frequency, *f*, and peak magnetic field strength, H_p, may be calculated as follows:

$$\ell_2 = 0.4\pi\, N_1 I_p / H_p \quad \text{(A2.3)}$$

where:

N_1 = number of turns in primary winding of yoke test fixture;
I_p = peak exciting current in primary winding of yoke test fixture at the magnetic flux density corresponding to the peak magnetic field strength, A; and
H_p = peak magnetic field strength by 25-cm [250-mm] Epstein test, Oe.

A2.7 When SI units are used, the effective peak magnetic field strength path length, ℓ_2 in metres, of the fixture for a specimen at a specified frequency, *f*, and peak magnetic field strength, H_2, may be calculated as follows:

$$\ell_2 = N_1\, I_p / H_p \quad \text{(A2.4)}$$

where:

N_1 = number of turns in primary winding of yoke test fixture;

Copyright ASTM International
Reproduced by IHS under license with ASTM
No reproduction or networking permitted without license from IHS
Not for Resale

I_p = peak exciting current in primary winding of yoke test fixture at the magnetic flux density corresponding to the peak magnetic field strength, A;

H_p = peak magnetic field strength by 25-cm [250-mm] Epstein test, A/m.

A2.8 Experience has shown that the effective magnetic path lengths will vary with class of material, thickness of the material, property under test, and test magnetic flux density. Hence, it is generally required for each particular class of material that a mean effective magnetic path length be determined at each test point for each nominal thickness of material. Where it can be demonstrated that the individual means do not deviate by more than ±1 % from the average of the means in the measurement of specific core loss or by more than ±5 % in the measurement of peak magnetic field strength, it is permissible to use the average of the means as an effective magnetic path length.

A3. CONSTRUCTION AND ADJUSTMENT OF AIR-CORE MUTUAL INDUCTOR FOR AIR-FLUX COMPENSATION

A3.1 The air-core mutual inductor for air-flux compensation (Fig. A3.1) uses a cylindrical winding form and end disks made from nonconducting, nonmagnetic material. The primary is layer wound directly onto the winding form and the secondary is layer wound over the primary. A layer of insulating material a few thousandths of an inch thick shall be used between the primary and secondary windings.

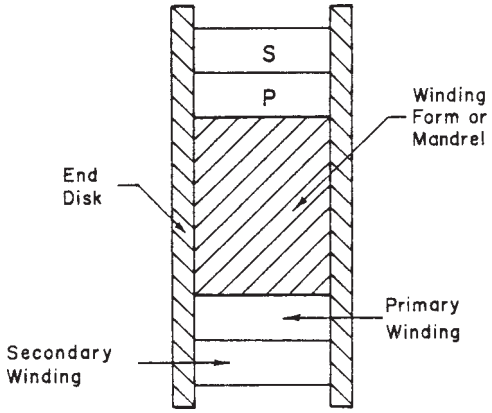

FIG. A3.1 Air-Core Mutual Inductor for Air-Flux Compensation

A3.2 To adjust the air-core mutual inductor properly, a specimen suitable for the yoke fixture and carrying a closely wound uniform winding of small-diameter wire along its length is used. The length of this winding shall be the same as that of the secondary winding of the fixture. Another winding, wound on a nonconducting, nonmagnetic form and having the same cross-sectional area, the same number of turns, and the same winding length as the winding on the specimen, must be secured to the specimen and electrically connected in series opposition with the winding on the specimen. The specimen shall be inserted in the fixture and magnetized to a high magnetic flux density. The number of secondary turns in the air-core mutual inductor shall be made such that the magnetic flux density calculated from the flux voltage at the secondary terminals of the fixture is the same as the magnetic flux density calculated from the flux voltage across the combined windings affixed to the specimen.

A4. CONSTRUCTION AND CALIBRATION OF AIR-CORE MUTUAL INDUCTOR FOR PEAK-CURRENT MEASUREMENT

A4.1 The air-core mutual inductor for peak current measurement (Fig. A4.1) shall use a cylindrical winding form and end disks made from nonconducting, nonmagnetic material and layer wound primary and secondary windings. In this inductor, the primary is split, with one half of the turns being wound directly on the winding form, followed by the full secondary winding, and finishing with the remaining half of the primary winding. A single thickness of fiber insulating material should be used between each layer of the secondary winding to facilitate winding and improve the frequency characteristics. The two halves of the primary shall be connected in series. The mutual inductance may be measured on a suitable bridge. Alternatively, a 60-Hz current of known peak value may be passed through the primary winding and the secondary voltage read with a flux voltmeter. If the secondary current is negligible at the time of measurement, the voltmeter will indicate 0.2666 flux volts per peak ampere of primary current per millihenry of mutual inductance. The mutual inductor must be so located that no appreciable externally produced leakage flux links the secondary winding in the absence of any primary current.

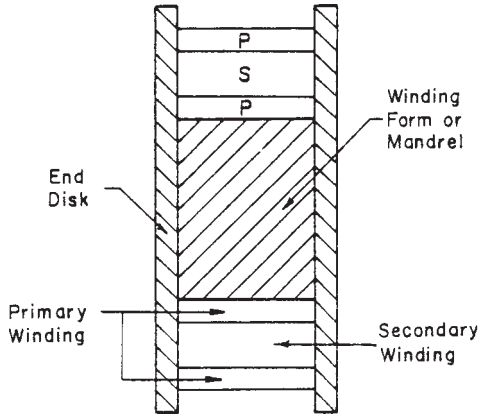

FIG. A4.1 Air-Core Mutual Inductor for Peak-Current Measurement

Copyright ASTM International
Reproduced by IHS under license with ASTM
No reproduction or networking permitted without license from IHS
Not for Resale

A5. CALIBRATION OF YOKE FIXTURES FOR TEST METHOD 2

A5.1 The specimens used to calibrate the yoke fixture shall consist of stress-relief-annealed strips typical of the grade of material that is to be tested in the fixture. If more than one grade is to be tested, specimens typical of each grade shall be used. At least five specimens of each grade are preferred. The number of strips in each specimen shall be an integer multiple of four and preferably should be at least twelve. The width of each strip shall be 3.0 cm [30 mm]. The minimum length of each specimen shall be no less than the outside dimension of the distance between the pole faces of the test fixture.

A5.2 Each specimen shall be tested in a 25-cm [250-mm] Epstein frame per Test Method A 343/A 343M. The magnetic properties to be determined are those which the yoke fixture is to measure routinely when calibrated. Depending upon the length of the specimens, the tests may need to be made at more than one position along their length to permit evaluation of the average properties. The specimens, when substantially longer than the Epstein test frame, shall be supported to maintain an essentially stress-free state.

A5.3 Each specimen should be inserted into the yoke fixture in a paralleled single-layer configuration and tested. Tests are made by establishing the desired magnetic flux density and determining the apparent specific core loss, or apparent peak magnetic field strength, or both. If necessary, the core loss should be corrected for form factor error.

A5.4 When customary units are used, the core loss calibration factor, K_1, of the fixture for a specimen at a specified frequency, f, and magnetic flux density, B, may be calculated as follows:

$$K_1 = Pc_{c(B;f)}/P_a \quad \text{(A5.1)}$$

where:

$P_{c\ (B;f)}$ = specific core loss by 25-cm [250-mm] Epstein test, W/lb and

P_a = apparent specific core loss by yoke fixture test, W/lb.

A5.5 When SI units are used, the core loss calibration factor, K_1, of the fixture for a specimen at a specified frequency, f, and magnetic flux density, B, may be calculated as follows:

$$K_1 = P_{c(B;f)}/P_a \quad \text{(A5.2)}$$

where:

$P_{c\ (B;f)}$ = specific core loss by 25-cm [250-mm] Epstein test, W/kg and

P_a = apparent specific core loss by yoke-fixture test, W/kg.

A5.6 When customary units are used, the peak magnetic field strength calibration factor, K_2, of the fixture for a specimen at a specified frequency, f, and peak magnetic field strength, H_p, may be calculated as follows:

$$K_2 = H_p/H_a \quad \text{(A5.3)}$$

where:

H_p = peak magnetic field strength by 25-cm [250-mm] Epstein test, Oe and

H_a = apparent peak magnetic field strength by yoke fixture test at the magnetic flux density corresponding to the peak magnetic field strength, Oe.

A5.7 When SI units are used, the peak magnetic field strength calibration factor, K_2, of the fixture at a specified frequency, f, and peak magnetic field strength, H_p, may be calculated as follows:

$$K_2 = H_p/H_a \quad \text{(A5.4)}$$

where:

H_p = peak magnetic field strength by 25-cm [250-mm] Epstein test, A/m and

H_a = apparent peak magnetic field strength by yoke-fixture test at the magnetic flux density corresponding to the peak magnetic field strength, A/m.

A5.8 Experience has shown that the calibration factors will vary with class of material, thickness of the material, property under test, and test magnetic flux density. Hence it is generally required for a particular class of material that a mean calibration factor be determined at each test point for each nominal thickness of material. Where it can be demonstrated that the individual means do not deviate by more than ±1 % from the average of the means in the measurement of specific core loss or by more than ±5 % in the measurement of peak magnetic field strength, it is permissible to use the average of the means as a calibration factor.

Copyright ASTM International
Reproduced by IHS under license with ASTM
No reproduction or networking permitted without license from IHS
Not for Resale

ASTM International takes no position respecting the validity of any patent rights asserted in connection with any item mentioned in this standard. Users of this standard are expressly advised that determination of the validity of any such patent rights, and the risk of infringement of such rights, are entirely their own responsibility.

This standard is subject to revision at any time by the responsible technical committee and must be reviewed every five years and if not revised, either reapproved or withdrawn. Your comments are invited either for revision of this standard or for additional standards and should be addressed to ASTM International Headquarters. Your comments will receive careful consideration at a meeting of the responsible technical committee, which you may attend. If you feel that your comments have not received a fair hearing you should make your views known to the ASTM Committee on Standards, at the address shown below.

This standard is copyrighted by ASTM International, 100 Barr Harbor Drive, PO Box C700, West Conshohocken, PA 19428-2959, United States. Individual reprints (single or multiple copies) of this standard may be obtained by contacting ASTM at the above address or at 610-832-9585 (phone), 610-832-9555 (fax), or service@astm.org (e-mail); or through the ASTM website (www.astm.org).

Copyright ASTM International
Reproduced by IHS under license with ASTM
No reproduction or networking permitted without license from IHS
Not for Resale