Designation: A 769/A 769M – 05

Standard Specification for Carbon and High-Strength Electric Resistance Forge-Welded Steel Structural Shapes[1]

This standard is issued under the fixed designation A 769/A 769M; the number immediately following the designation indicates the year of original adoption or, in the case of revision, the year of last revision. A number in parentheses indicates the year of last reapproval. A superscript epsilon (ε) indicates an editorial change since the last revision or reapproval.

1. Scope*

1.1 This specification covers carbon and high-strength steel shapes of structural quality manufactured by the electric-resistance forge-welding process from coils.

1.2 The size range covered is described in nominal dimensions for columns, beams, and tees.

	Size Range, in. (mm)
Web thickness	0.060 to 0.375 [1.5 to 10]
Flange thickness	0.060 to 0.500 [1.5 to 12.7]
Overall depth	2.00 to 24.00 [50 to 600]
Flange width	0.50 to 12.00 [12.7 to 300]

1.3 These shapes are intended for two classes of application:

1.3.1 *Class 1*— General structural use where static loading predominates.

1.3.2 *Class 2*—Structural use where fatigue loading occurs and is a principal design consideration.

NOTE 1—**Caution—**Because of the absence of smooth, integral, large radius fillets at the junctions of the webs and the flanges (see Fig. 1), fatigue limits of resistance forge-welded shapes in torsion, lateral loading, and flexure are usually lower than those for hot-rolled shapes of similar size and material. Users should consult shape manufacturers for recommended values of fatigue limits for each specific use, material, and size in cases where dynamic loading is a principal design consideration.

1.4 When the steel is to be welded, it is presupposed that a welding procedure suitable for the grade of steel and intended use or service will be utilized. See Appendix X3 of Specification A 6/A 6M for information on weldability.

1.5 The values stated in either inch-pound units or SI units are to be regarded separately as standard. Within the text, the SI units are shown in brackets. The values stated in each system are not exact equivalents. Therefore, each system must be used independently of the other. Combining values from the two systems may result in nonconformance with this specification.

1.6 The following safety hazards caveat pertains only to the test methods portion, Section 10, of this specification: *This standard does not purport to address all of the safety concerns, if any, associated with its use. It is the responsibility of the user of this standard to establish appropriate safety and health practices and determine the applicability of regulatory limitations prior to use.*

2. Referenced Documents

2.1 *ASTM Standards:*

A 6/A6M Specification for General Requirements for Rolled Structural Steel Bars, Plates, Shapes, and Sheet Piling

A 370 Test Methods and Definitions for Mechanical Testing of Steel Products

A 568/A568M Specification for Steel, Sheet, Carbon, and High-Strength, Low-Alloy, Hot-Rolled and Cold-Rolled, General Requirements for

A 700 Practices for Packaging, Marking, and Loading Methods for Steel Products for Domestic Shipment

2.2 *American Welding Society Standard:*

AWS Specification D 1.1, Structural Welding Code[2]

3. Ordering Information

3.1 Orders for material under this specification should include the following, as required, to describe the desired material adequately:

3.1.1 Quantity (total number of feet (metres) or lengths),

3.2 ASTM designation and year of issue, grade, and class,

3.3 Shape and size,

3.4 Length of each piece,

3.5 Information on intended application,

3.6 Other special requirements, and

3.7 Required certification and test reports.

4. Materials and Manufacture

4.1 The shapes shall be manufactured from coils by the electric-resistance forge-welding process. All components of a shape shall be furnished to the same grade unless otherwise specified.

4.2 For Class 1 shapes the average width of weld at the joint to the flange shall be more than 110 % of the nominal web

[1] This specification is under the jurisdiction of ASTM Committee A01 on Steel, Stainless Steel and Related Alloys and is the direct responsibility of Subcommittee A01.02 on Structural Steel for Bridges, Buildings, Rolling Stock and Ships.

Current edition approved Sept. 1, 2005. Published September 2005. Originally approved in 1979. Last previous edition approved in 2000 as A 769/A 769M – 00.

[2] Available from American Welding Society, 550 N. W. LaJeune Rd., Miami, FL 33135.

***A Summary of Changes section appears at the end of this standard.**

Copyright © ASTM International, 100 Barr Harbor Drive, PO Box C700, West Conshohocken, PA 19428-2959, United States.

Copyright ASTM International
Provided by IHS under license with ASTM
No reproduction or networking permitted without license from IHS
Not for Resale

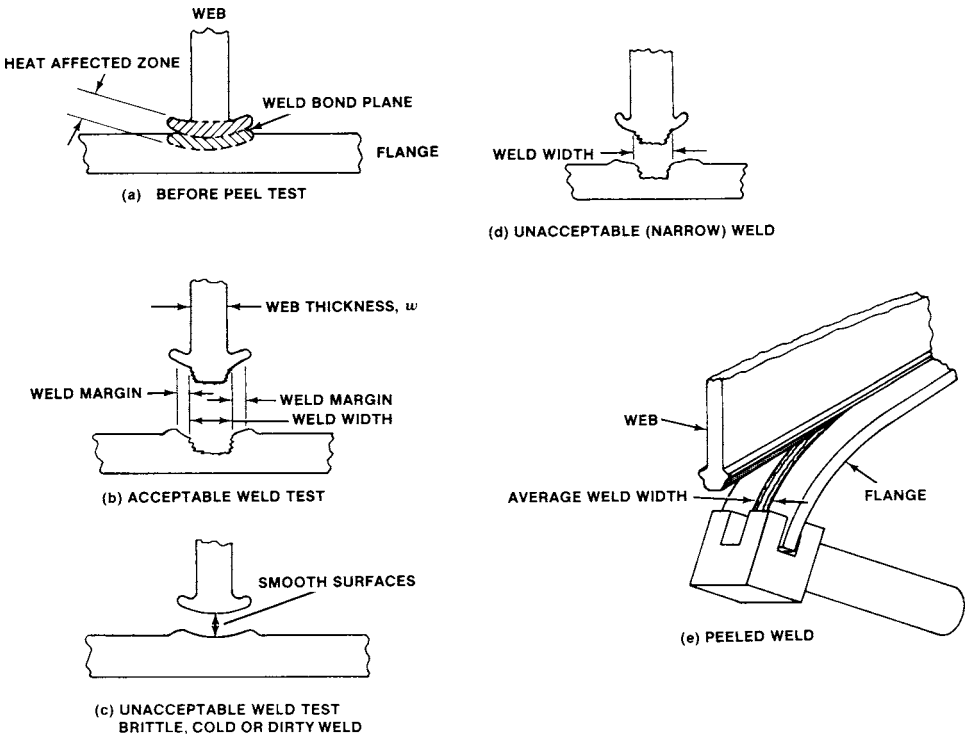

FIG. 1 Appearance of Peel Test Criteria

thickness (see Fig. 1(*b*)). The acceptability of coil-splice welds in webs and flanges shall be subject to negotiation between the purchaser and the manufacturer.

4.3 For Class 2 shapes the average width of weld at the joint to the flange shall be more than 130 % of the nominal web thickness (see Fig. 1(*b*)). Coil-splice welds shall not be permitted.

4.4 Flash caused by welding will not be removed unless indicated on the purchase order.

5. Chemical Composition

5.1 An analysis of each heat of steel shall be made by the steel manufacturer. The chemical composition thus determined shall conform to the requirements of Table 1, subject to the product analysis tolerances in Specification A 6/A 6M for plate steels or Specification A 568/A 568M for sheet steels. Heat analysis reports shall be furnished by the shape manufacturer upon request.

TABLE 1 Chemical Requirements[A]

General Limitations, %	
Carbon	0.26 max
Manganese	0.30 min to 1.65 max
Phosphorus	0.04 max
Sulfur	0.05 max
Silicon	0.60 max

[A]The choice and use of alloying elements (combined with carbon, manganese, phosphorus, and sulfur within the limits prescribed) to provide the specified mechanical properties, or to enhance the atmospheric corrosion resistance, or both, may vary with manufacturer and thickness of material. Elements commonly added include: boron, chromium, copper, molybdenum, nickel, silicon, vanadium, titanium, zirconium, and columbium. The heat analysis, including the alloying elements intentionally added, shall be reported to the purchaser. Permitted variations in product analysis shall be within the limits established in Table B of Specification A 6/A 6M.

5.2 The steel supplier, shape manufacturer, and the shape purchaser shall establish a chemical composition, which will assure the purchaser of the desired properties while providing the shape manufacturer with material that is weldable by the electric-resistance welding process.

6. *Tension Test* Tension Test

6.1 The material as represented by the test specimen shall conform to the requirements of tensile properties prescribed in Table 2.

6.2 The shape manufacturer shall furnish, upon request, test reports of tensile properties determined in accordance with Sections 8, 9, and 10.

7. Permissible Variations in Dimensions

7.1 Unless otherwise agreed upon by the shape manufacturer and the purchaser, dimensional variations shall conform to Specification A 6/A 6M (13.3 and Tables 16 to Tables 24 inclusive) for shapes of similar dimensions. Thicknesses of the shape components shall be based on nominal thicknesses conforming to Specification A 6/A 6M (Table 1, plate) or Specification A 568/A 568M (Tables 4 and Tables 5 , sheet). Nominal thickness shall be defined as the minimum thickness specified plus one half the allowable thickness tolerance as shown in the tables. The nominal weight per foot of the shape shall be calculated based on the nominal thickness and allowable variations in weight shall be equivalent to allowable variations in thickness.

8. Number of Tests

8.1 *Tension Tests*:

Copyright ASTM International
Provided by IHS under license with ASTM
No reproduction or networking permitted without license from IHS
Not for Resale

TABLE 2 Mechanical Properties

Grade	36	45	45W[A]	50	50W[A]	60	80
Tensile strength, min, psi [MPa]	53 000 [365]	60 000 [415]	65 000 [450]	65 000 [450]	70 000 [485]	75 000 [520]	90 000 [620]
Yield point, min, psi [MPa]	36 000 [250]	45 000 [310]	45 000 [310]	50 000 [345]	50 000 [345]	60 000 [415]	80 000 [550]
Elongation, min, %							
in 2 in. [50 mm]	22	19	19	17	17	17	17
in 8 in. [200 mm][B]	15	14	14	12	12	12	12

[A]The suffix "W" indicates steel grades having atmospheric corrosion resistance approximately two times that of carbon structural steel with copper.
[B] See elongation requirement adjustments under the Tension Tests section of Specification A 6/A 6M. See specimen orientation in the Tension Tests section of Specification A 6/A 6M.

8.1.1 For steel ordered from the steel manufacturer as coiled sheet to minimum mechanical properties (ASTM or equivalent), the shape manufacturer may certify his steel based on manufacturer's test reports of mechanical properties. Two tension tests, taken longitudinally, shall be made by the steel manufacturer from each heat, unless the finished material from a heat is less than 50 ton [50 Mg], in which case one tension test will be sufficient. When material rolled from one heat differs 0.050 in. [1.2 mm] or more in thickness, one tension test shall be made from both the thickest and thinnest material rolled regardless of the weight represented.

8.1.2 For heavy thickness coils ordered to minimum mechanical properties, make one tension test of the end lap either by the steel manufacturer as in 8.1.1 or by the shape manufacturer.

8.1.2.1 In addition, the shape manufacturer shall make one tension test using a specimen which is representative of the approximate middle of the original coil length. Make these tests on the product of two coils from each heat for each nominal thickness which differs by more than 0.050 in. [1.2 mm] from the thickness already tested for that heat.

8.1.3 For all steel not made to minimum mechanical properties, regardless of thickness, the shape manufacturer shall make the tests as in 8.1.2 for each coil. Specimens taken for testing from the middle of the original coil length shall, in addition, be taken from the approximate quarter point of the original coil width.

8.2 *Peel Tests*:

8.2.1 One peel test, 8.2, is required on both sides of each butt weld on the flanges and web. A short (2 to 5 ft) sample shall be cut from the section and a peel test shall be performed on both ends of the section, on both welds.

8.3 *Tee Tension Tests*—One tee tension test, 8.3, is required of each weld for each lot.

8.3.1 A lot consists of not more than 1 h of welding of material of unchanged dimensions and heat number. A new lot will be started in the event of a dimension change or start of a new heat of steel for any component of the shape.

9. Retests

9.1 If one tension test fails, run two more tension tests from an adjacent location of the same parent coil. Both retests shall conform to the requirements prescribed in this specification; otherwise, the product of all coils represented by those tests shall stand rejected.

9.2 If the results of the peel tests and tee tension tests representing any lot do not meet a requirement as specified in Section 10, make two retests, one on each side of and adjacent to the original test, from the same lot. Each retest shall meet the requirements specified, or the lot represented by the retests shall be rejected.

10. Test Methods

10.1 *Tension Test*:

10.1.1 The tension specimens required by this specification shall conform to those described in the latest issue of Test Methods A 370.

10.1.2 Take all tension test specimens longitudinally. Remove all burrs from the specimens and ensure that there are no surface imperfections that would interfere with proper determination of the tensile properties of the metal.

10.1.3 Determine the mechanical properties, Table 2, in accordance with one of the methods described in Test Methods A 370.

10.2 *Peel Test*— The peel test is conducted to determine weld width and ductility. In this test it is necessary to separate the flange from the web and the flange from the stem of tee sections mechanically for a length of approximately 2 in. (50 mm) by any method that places the weld bond plane in progressive, peeling tension. A slotted bending hook, Fig. 2(*a*), is preferred. Fracture may be initiated on the bond plane by a notch pressed or sawed into the end of the specimen along the weld bond plane (Fig. 2(*c*)). Striking of the inner surface of the flange on alternate sides of the weld with a hammer may be used to perform the peel test, if necessary, in cases where a bending hook is not appropriate. Appearance and width of the fracture are the bases for evaluating weld quality.

10.2.1 *Flange Pullout*— The usual mode of fracture causes a pullout of the surface of the flange under the weld. This is evidence of an acceptable metallurgical bond. The average width of the pullout material (Fig. 1(*b*)) expressed as a percentage of the nominal web thickness shall be: for Class 1 shapes, more than 110 %; and for Class 2 shapes, more than 130 %. Typically, the appearance of pulled out material is rough, often having a woody texture. A general nonoriented roughness or granular appearance is acceptable. Measure the weld width using an appropriate steel scale or caliper. Some variation of width is to be expected. Fracture that results in a relatively smooth surface shall be taken as an indication of a brittle or poorly bonded weld, and is unacceptable. Regions of this appearance that lie adjacent to pulled-out flange material are not to be included in estimating width of pulled-out material (see Weld Margin in Fig. 1(*b*)).

Copyright ASTM International
Provided by IHS under license with ASTM
No reproduction or networking permitted without license from IHS
Not for Resale

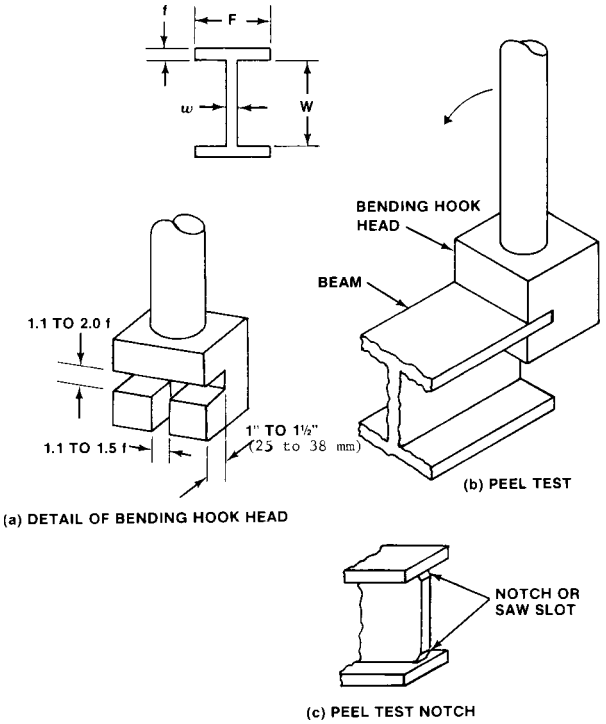

FIG. 2 Details of Peel Test

10.2.2 *Web Fracture*— Fracture will ordinarily not occur in the web or stem unless (*1*) that member is made of significantly weaker steel than the flange, or (*2*) the weld width is over 150 % of web thickness for similar materials. For (*1*) the test is not applicable, and the weld is considered acceptable. For (*2*) the weld is considered acceptable.

10.2.3 *Flange Shearing*— Flange shearing-fracture may occur by shearing the flange on both sides of the weld. In such cases, the weld is acceptable.

10.3 *Tee Tension Test*:

10.3.1 The purpose of the tee tension test is to compare the static tensile strength of the weld to the tensile strength of the web and the strength of the flange in shear.

10.3.2 The test is conducted by clamping the flange of a short length of section in a slotted holder, Fig. 3. The width of the slot should not exceed 1.5 times the flange thickness, and the flange must be clamped adequately in order to minimize bending of the flange. Welding flash must be removed if it interferes with the holder. The length of the specimen is normally about 1 in. (25 mm), but other lengths may be used.

10.3.3 The web shall be held in tapered jaw grips of suitable shape to avoid fracture in the grips.

10.3.3.1 Fracture of the specimen in web tension or flange shear is acceptable.

10.3.3.2 Fracture of the specimen in the flange near the weld is acceptable if weld width requirements are met.

10.3.3.3 Fracture in the weld bond plane is not acceptable.

10.4 *Test Specimen Preparation*:

10.4.1 Prepare the specimens for mechanical tests in such a way that the areas of interest are not significantly affected by the thermal or mechanical consequences of cutting. The areas of interest are the weld zone at the tested end of the peel test specimen and the entire tee tensile specimen.

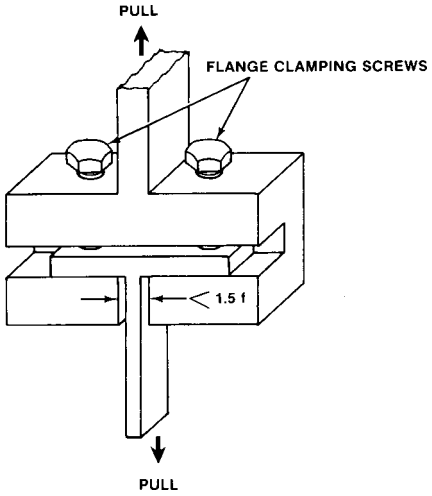

FIG. 3 Tee Tension Test

10.4.2 Cold cutting methods such as band sawing, hack sawing, wet abrasive wheel cutting, and milling are acceptable; shearing, hot sawing, torch cutting, and dry abrasive cutting are unacceptable.

11. Repair by Welding

11.1 In the case of retest under 9.2, the shape manufacturer may elect to repair by welding, or rework, or otherwise eliminate the conditions responsible for failure to meet the specified requirements. The repaired material shall be tested and shall comply with all the requirements of this specification.

11.2 Rejectable imperfections may be repaired by the shape manufacturer using practices that conform to the latest issue of AWS Specification D 1.1.

12. Inspection and Testing

12.1 The inspector representing the purchaser shall have free entry to all parts of the shape manufacturer's works that concern the manufacture of the material ordered while work on the contract of the purchaser is being performed. The shape manufacturer shall provide the inspector with all reasonable facilities to satisfy him that the material is being furnished in accordance with this specification. All tests (except heat analysis and as noted in 8.1.1) and inspection shall be made at the place of shape fabrication before shipment, unless otherwise specified, and shall be conducted so as not to interfere with the operation of the works.

13. Packaging, Marking, and Loading

13.1 Packaging, marking, and loading for shipment shall be in accordance with procedures recommended in Practices A 700. Shapes shall be marked with the size of section, length, specification designation, grade, and class. Manufacturer's name, brand or trademark, and lot identification shall be legibly marked by adhesive weatherproof label or paint stenciling or steel die indentation, preferably on the web. Small shapes with the greatest cross-sectional dimension not more than 6 in. [150 mm] may be bundled for shipment with each lift marked or tagged showing the information required above.

Copyright ASTM International
Provided by IHS under license with ASTM
No reproduction or networking permitted without license from IHS
Not for Resale

TABLE 3 Common Sizes of Electric Resistance Forge-Welded Sections

Designation			Area	Weight	Depth	Web Thickness	Flange Width	Flange Thickness
Depth	×	lb/ft	in2 [mm2]	lb/ft [kg/m]	in. [mm]	in. [mm]	in. [mm]	in. [mm]
3.50	×	3.23	0.932 [601]	3.23 [4.81]	3.5 [89]	0.095 [2.4]	3.25 [83]	0.095 [2.4]
3.63	×	3.61	1.041 [672]	3.61 [5.37]	3.625 [92]	0.105 [2.7]	3.25 [83]	0.105 [2.7]
4.00	×	3.75	1.080 [697]	3.75 [5.58]	4.00 [102]	0.105 [2.7]	3.25 [83]	0.105 [2.7]
5.50	×	3.88	1.122 [724]	3.88 [5.77]	5.50 [140]	0.095 [2.4]	3.25 [83]	0.095 [2.4]
6.00	×	4.46	1.290 [832]	4.46 [6.64]	6.00 [152]	0.105 [2.7]	3.25 [83]	0.105 [2.7]
6.50	×	4.02	1.181 [762]	4.02 [5.98]	6.50 [165]	0.090 [2.3]	2.50 [64]	0.120 [3.1]
8.00	×	6.38	1.853 [1196]	6.39 [9.51]	8.00 [203]	0.120 [3.1]	3.00 [76]	0.155 [3.9]
8.25	×	5.65	1.662 [1073]	5.65 [8.41]	8.25 [210]	0.090 [2.3]	3.00 [76]	0.095 [2.4]
10.00	×	7.59	2.208 [1425]	7.59 [11.30]	10.00 [254]	0.120 [3.1]	3.00 [76]	0.175 [4.5]
10.25	×	7.60	2.235 [1442]	7.60 [11.31]	10.25 [260]	0.100 [2.5]	3.50 [89]	0.175 [4.5]
10.25	×	8.28	2.437 [1572]	8.28 [12.33]	10.25 [260]	0.120 [3.1]	3.50 [89]	0.175 [4.5]
12.00	×	10.61	3.120 [2013]	10.61 [15.79]	12.00 [305]	0.120 [3.1]	3.50 [89]	0.245 [6.2]
12.25	×	9.90	2.911 [1878]	9.90 [14.73]	12.25 [311]	0.100 [2.5]	3.50 [89]	0.245 [6.2]
12.25	×	10.71	3.150 [2032]	10.71 [15.94]	12.25 [311]	0.120 [3.1]	3.50 [89]	0.245 [6.2]
14.00	×	11.43	3.336 [2152]	11.43 [17.01]	14.00 [356]	0.120 [3.1]	3.50 [89]	0.245 [6.2]
16.00	×	14.11	4.150 [2677]	14.11 [21.00]	16.00 [406]	0.155 [3.9]	3.50 [89]	0.245 [6.2]

14. Electric Resistance Forge-Welded Sections

14.1 A partial list of common electric resistance forge-welded sections are shown in Table 3.

15. Keywords

15.1 carbon; coils; electric resistance; fatigue loading; high-strength; shapes; static loading; steel; structural steel; welded

SUPPLEMENTARY REQUIREMENTS

S1. Supplementary requirements shall not apply unless specified in the purchase order or contract. Standardized supplementary requirements for use at the option of the purchaser are listed in Specification A 6/A 6M.

SUMMARY OF CHANGES

Committee A01 has identified the location of selected changes to this standard since the last issue (A 769/A 769M – 00) that may impact the use of this standard.

(1) Sections 1, 2, 4.1, 4.2, 5.1, 5.2, 6.2, 7.1, 8.1.1, 8.1.2, 8.1.2.1, 8.1.3, 11.1, 11.2, 12.1, and 13 were revised.
(2) Table 1 and Table 2 were revised.
(3) Table 3 was added.
(4) Section 14 was added.

ASTM International takes no position respecting the validity of any patent rights asserted in connection with any item mentioned in this standard. Users of this standard are expressly advised that determination of the validity of any such patent rights, and the risk of infringement of such rights, are entirely their own responsibility.

This standard is subject to revision at any time by the responsible technical committee and must be reviewed every five years and if not revised, either reapproved or withdrawn. Your comments are invited either for revision of this standard or for additional standards and should be addressed to ASTM International Headquarters. Your comments will receive careful consideration at a meeting of the responsible technical committee, which you may attend. If you feel that your comments have not received a fair hearing you should make your views known to the ASTM Committee on Standards, at the address shown below.

This standard is copyrighted by ASTM International, 100 Barr Harbor Drive, PO Box C700, West Conshohocken, PA 19428-2959, United States. Individual reprints (single or multiple copies) of this standard may be obtained by contacting ASTM at the above address or at 610-832-9585 (phone), 610-832-9555 (fax), or service@astm.org (e-mail); or through the ASTM website (www.astm.org).

Copyright ASTM International
Provided by IHS under license with ASTM
No reproduction or networking permitted without license from IHS
Not for Resale