Designation: A 757/A 757M – 00 (Reapproved 2004)

Standard Specification for Steel Castings, Ferritic and Martensitic, for Pressure-Containing and Other Applications, for Low-Temperature Service[1]

This standard is issued under the fixed designation A 757/A 757M; the number immediately following the designation indicates the year of original adoption or, in the case of revision, the year of last revision. A number in parentheses indicates the year of last reapproval. A superscript epsilon (ε) indicates an editorial change since the last revision or reapproval.

This standard has been approved for use by agencies of the Department of Defense.

1. Scope

1.1 This specification covers carbon and alloy steel castings for pressure-containing and other applications intended primarily for petroleum and gas pipelines in areas subject to low-ambient temperatures. Castings shall be heat treated by normalizing and tempering or liquid quenching and tempering. All classes are weldable under proper conditions. Hardenability of some grades may limit usable section size.

1.2 The values stated in either inch-pound units or SI units are to be regarded separately as standard. Within the text, the SI units are shown in brackets. The values stated in each system are not exact equivalents; therefore, each system must be used independently of the other. Combining values from the two systems may result in nonconformance with the specification. Inch-pound units are applicable for material ordered to Specification A 757 and SI units for material ordered to Specification A 757M.

2. Referenced Documents

2.1 *ASTM Standards:* [2]

A 370 Test Methods and Definitions for Mechanical Testing of Steel Products

A 488/A 488M Practice for Steel Castings, Welding, Qualifications of Procedures and Personnel

A 703/A 703M Specification for Steel Castings, General Requirements, for Pressure-Containing Parts

A 919 Terminology Relating to Heat Treatment of Metals[3]

E 29 Practice for Using Significant Digits in Test Data to Determine Conformance with Specifications

E 30 Test Methods for Chemical Analysis of Steel, Cast Iron, Open-Hearth Iron, and Wrought Iron[3]

E 38 Methods for Chemical Analysis of Nickel-Chromium and Nickel-Chromium-Iron Alloys[3]

E 94 Guide for Radiographic Examination

E 125 Reference Photographs for Magnetic Particle Indications on Ferrous Castings

E 142 Method for Controlling Quality of Radiographic Testing[3]

E 165 Test Method for Liquid Penetrant Examination

E 186 Reference Radiographs for Heavy-Walled (2 to 4½-in. [51 to 114-mm]) Steel Castings

E 208 Test Method for Conducting Drop-Weight Test to Determine Nil-Ductility Transition Temperature of Ferritic Steels

E 280 Reference Radiographs for Heavy-Walled (4½ to 12-in. [114 to 305-mm]) Steel Castings

E 350 Test Methods for Chemical Analysis of Carbon Steel, Low-Alloy Steel, Silicon Electrical Steel, Ingot Iron, and Wrought Iron

E 353 Test Methods for Chemical Analysis of Stainless, Heat-Resisting, Maraging, and Other Similar Chromium-Nickel-Iron Alloys

E 390 Reference Radiographs for Steel Fusion Welds

E 446 Reference Radiographs for Steel Castings up to 2 in. [51 mm] in Thickness

E 709 Guide for Magnetic Particle Examination

2.2 *American Society of Mechanical Engineers:*[4]

ASME Boiler and Pressure Vessel Code

2.3 *Manufacturers Standardization Society of the Valve and Fittings Industry Standards:*[5]

MSS SP-53 Quality Standard for Steel Castings for Valves, Flanges and Fittings, and Other Piping Components (Dry Powder Magnetic Particle Inspection Method)

MSS SP-54 Quality Standard for Steel Casting for Valves, Flanges and Fittings, and Other Piping Components (Radiographic Inspection Method)

[1] This specification is under the jurisdiction of ASTM Committee A01 on Steel, Stainless Steel, and Related Alloys and is the direct responsibility of Subcommittee A01.18 on Castings.

Current edition approved Oct. 1, 2004. Published October 2004. Originally approved in 1978. Last previous edition approved in 2000 as A 757/A 757M – 00.

[2] For referenced ASTM standards, visit the ASTM website, www.astm.org, or contact ASTM Customer Service at service@astm.org. For *Annual Book of ASTM Standards* volume information, refer to the standard's Document Summary page on the ASTM website.

[3] Withdrawn.

[4] Available from American Society of Mechanical Engineers (ASME), ASME International Headquarters, Three Park Ave., New York, NY 10016-5990.

[5] Available from Manufacturers Standardization Society of the Valve and Fittings Industry (MSS), 127 Park St., NE, Vienna, VA 22180-4602.

Copyright © ASTM International, 100 Barr Harbor Drive, PO Box C700, West Conshohocken, PA 19428-2959, United States.

Copyright ASTM International
Reproduced by IHS under license with ASTM
No reproduction or networking permitted without license from IHS
Not for Resale

MSS SP-55 Quality Standard for Steel Castings for Valves, Flanges and Fittings, and Other Piping Components (Visual Method)

3. Terminology

3.1 *Definitions:*

3.1.1 Definitions in Test Methods and Definitions A 370 and Terminology A 919 are applicable to this specification.

3.1.2 Definition of nominal thickness, *T*, applies to quenched and tempered castings with a thickness exceeding 2 in. [50 mm]. Nominal thickness, *T*, is the maximum thickness of the pressure-containing wall of the casting exclusive of padding added for directional solidification, flanges, appendages, and sections designated by the designer as noncritical.

4. Ordering Information

4.1 Orders for material to this specification should include the following, as required, to describe the material adequately:

4.1.1 Description of the casting by pattern number or drawing (dimensional tolerances shall be included on the casting drawing),

4.1.2 Grade,

4.1.3 Options in the specification,

4.1.4 Detailed drawing, including areas that are suitable for marking, the proposed nondestructive testing techniques and areas to be so tested, and the test dimension, *T* (see 3.1.2), and

4.1.5 Supplementary requirements desired, if any, including standards of acceptance.

5. Materials and Manufacture

5.1 *Melting Process*—The steel shall be made by the electric furnace process or other primary processes approved by the purchaser. The primary melting may incorporate separate degassing or refining and may be followed by secondary melting.

5.2 *Heat Treatment*:

5.2.1 All castings shall be heat treated by either normalizing and tempering or quenching and tempering. Tempering temperature shall be 1100°F [595°C] minimum, except grades B4N and B4Q, which shall be tempered at 1050°F [565°C] minimum.

5.2.2 E3N castings shall be heat treated by heating to 1850°F [1010°C] minimum, and air cooling to 200°F [95°C] maximum before any optional intermediate temper, but shall cool to 100°F [40°C] maximum before the final temper, which shall be between 1050 and 1150°F [565 and 620°C].

5.2.3 Furnace temperatures for heat treating shall be controlled by pyrometers.

5.2.4 Castings shall be allowed to cool below the transformation range directly after pouring and solidification before they are reheated for normalizing or liquid quenching.

6. Chemical Composition

6.1 *Heat Analysis*—An analysis of each heat shall be made by the manufacturer to determine the percentages of the elements specified in Table 1. The analysis shall be made from a test sample preferably taken during the pouring of the heat. When drillings are used, they shall be taken not less than ¼ in. [6.4 mm] beneath the surface. The chemical composition thus determined shall be reported to the purchaser or his representative, and shall conform to the requirements specified in Table 1 for the grade being poured.

6.2 *Product Analysis*—A product analysis may be made by the purchaser from material representing each heat, lot, or

TABLE 1 Chemical Requirements (Maximum Percent Unless Range is Given)

Grade	A1Q	A2Q	B2N B2Q	B3N B3Q	B4N B4Q	C1Q	D1N1 D1Q1 D1N2 D1Q2 D1N3 D1Q3	E1Q	E2N, E2Q	E3N
Type	Carbon	Carbon-Manganese	2½ Nickel	3½ Nickel	4½ Nickel	Nickel Molybdenum	Chromium Molybdenum	Nickel Chromium Molybdenum	Nickel Chromium Molybdenum	Martensitic Chromium Nickel
Carbon	0.30	0.25[A]	0.25	0.15	0.15	0.25	0.20	0.22	0.20	0.06
Manganese	1.00	1.20[A]	0.50/0.80	0.50/0.80	0.50/0.80	1.20	0.40/0.80	0.50/0.80	0.40/0.70	1.00
Phosphorus	0.025	0.025	0.025	0.025	0.025	0.025	0.025	0.025	0.020	0.030
Sulfur	0.025	0.025	0.025	0.025	0.025	0.025	0.025	0.025	0.020	0.030
Silicon	0.60	0.60	0.60	0.60	0.60	0.60	0.60	0.60	0.60	1.00
Nickel	—	—	2.0/3.0	3.0/4.0	4.0/5.0	1.5/2.0	—	2.5/3.5	2.75/3.90	3.5/4.5
Chromium	—	—	—	—	—	—	2.0/2.75	1.35/1.85	1.50/2.0	11.5/14.0
Molybdenum	—	—	—	—	—	0.15/0.30	0.90/1.20	0.35/0.60	0.40/0.60	0.40/1.0
Specified Residual Elements:										
Vanadium	0.03	0.03	0.03	0.03	0.03	0.03	0.03	0.03	0.03	—
Copper	0.50	0.50	0.50	0.50	0.50	0.50	0.50	0.50	0.50	0.50
Nickel	0.50	0.50	—	—	—	—	0.50	—	—	—
Chromium	0.40	0.40	0.40	0.40	0.40	0.40	—	—	—	—
Molybdenum	0.25	0.25	0.25	0.25	0.25	—	—	—	—	—
Tungsten	—	—	—	—	—	—	0.10	—	0.10	0.10
Total residuals (maximum %)[B]	1.00	1.00	1.00	1.00	1.00	1.00	1.00	0.70	0.70	0.50

[A] For each 0.01 % of reduction in carbon below the maximum specified, an increase of 0.04 % manganese over the maximum specified will be permitted up to 1.40 %.
[B] Total residuals includes phosphorus and sulfur.

Copyright ASTM International
Reproduced by IHS under license with ASTM
No reproduction or networking permitted without license from IHS
Not for Resale

casting. The analysis shall be made on representative material. Due to the possibility of decarburization, samples for carbon analysis shall be taken no closer than ¼ in. [6.4 mm] to a cast surface, except that castings too thin for this shall be analyzed on representative material. When a product analysis is performed, the chemical composition thus determined may vary from the specified limits in Table 1 by the amounts shown in Table 2. When the analysis exceeds the permitted variance specified in Table 2, the material shall be subject to rejection by the purchaser.

6.3 *Referee Analysis*—Test Methods E 350 or E 353 shall be used for referee purposes. Test Methods E 30 or E 38 shall be used if Test Methods E 350 or E 353 do not include a method for some element present in the material. When a comparison is made between the heat analysis and the referee analysis, the reproducibility data, R 2, in the precision statement of Test Methods E 350 or E 353 shall be used as a guide.

6.4 *Rounding*—Chemical analysis results shall be rounded, in accordance with Practice E 29, to the nearest unit in the last right-hand place of values in the table of chemical requirements.

7. Tensile Requirements

7.1 One tension test shall be made from each heat. The mechanical properties thus determined shall conform to the requirements specified in Table 3. The bar from which the tension specimen is machined shall be in accordance with Section 12.

TABLE 2 Product Analysis Tolerances

Element	Range,[A] %	Tolerances[B,C] Over Maximum or Under Minimum Limit, %
C	up to 0.65	0.03 × % C_L + 0.02
	above 0.65	0.04
Mn	up to 1	0.08 × % Mn_L + 0.01
	above 1	0.09
Si	up to 0.60	0.22 × % Si_L − 0.01
	above 0.60	0.15
P	all	0.13 × % P_L + 0.005
S	all	0.36 × % S_L + 0.001
Ni	up to 2	0.10 × % Ni_L + 0.03
	above 2	0.25
Cr	up to 2	0.07 × % Cr_L + 0.04
	above 2	0.18
Mo	up to 0.6	0.04 × % Mo_L + 0.03
	above 0.6	0.06
V	up to 0.25	0.23 × % V_L + 0.004
	above 0.25	0.06
W	up to 0.10	0.08 × % W_L + 0.02
	above 0.10	0.02
Cu	up to 0.15	0.18 × % Cu_L + 0.02
	above 0.15	0.05
A1	up to 0.10	0.08 × % Al_L + 0.02
	above 0.10	0.03

[A] The range denotes the composition limits up to which tolerances are computed by the equation and above which the tolerances are given by a constant.

[B] The subscript *L* for the elements in each equation indicates that the limits of the element specified by the applicable specification are to be inserted into the equation to calculate the tolerance for the upper limit and the lower limit (if applicable), respectively. Examples of computing tolerances are presented in the Footnote *C* below.

[C] To illustrate, consider the manganese limits 0.50 to 0.80 % of E 1Q. According to Table 4, the maximum permissible deviation of a product analysis below the lower limit 0.50 is 0.05 % = (0.08 × 0.50 + 0.01). The lowest acceptable product analysis of E 1Q, therefore, is 0.45 %. Similarly, the maximum permissible deviation above the upper limit of 0.80 % is 0.074 % = (0.08 × 0.80 + 0.01). The highest acceptable product analysis of E 1Q, therefore, is 0.874 %. For A 2Q, the maximum manganese content is 1.40 % if the carbon content is 0.20 % or lower. In this case, the highest acceptable product analysis is 1.49 % = (1.40 + 0.09).

7.2 Tension test specimens shall be machined to the form and dimensions shown in Fig. 2 of Test Methods and Definitions A 370 and tested in accordance with Test Methods and Definitions A 370.

7.3 If a specimen is machined improperly or flaws are revealed, the specimen may be discarded and another substituted from the same heat.

7.4 To determine conformance with the tension test requirements, an observed value or calculated value shall be rounded off in accordance with Practice E 29 to the nearest 500 psi [5 MPa] for yield and tensile strengths and to the nearest 1 % for elongation and reduction of area.

8. Impact Requirements

8.1 Impact properties shall be determined on each heat by testing a set of three Charpy V-notch specimens. The bar from which the impact specimens are machined shall be prepared in accordance with Section 12. The longitudinal axis of the Charpy specimens shall be parallel to the longitudinal axis of the tensile bar. Testing shall be in accordance with Test Methods and Definitions A 370 using the Charpy V-notch Type A specimen.

8.2 Test temperature and absorbed energy requirements for the grade shall be as specified in Table 4, except for those grades that have no values specified, in which case, impact energy values and test temperatures shall be agreed upon between the manufacturer and the purchaser. The average energy value of three specimens shall not be less than the minimum average specified, with only one value permitted below the minimum average specified and this value not permitted to fall below the minimum specified for a single specimen. Supplementary Requirement S8 may be specified if lateral expansion or percent shear area, or both, are desired by the purchaser.

8.3 Impact properties shall also be determined on both the heat-affected zone of the base metal and the weld metal of the welding procedure qualification test. Test temperature, energy absorption, specimen type, and test method shall be the same as specified for the base material.

8.3.1 *Coupons Representing the Weld Deposits*—Impact specimens shall be located so that the longitudinal axis of the specimen is at least one fourth of the thickness of the weld test plate, *t*, from the surface of the test assembly and is transverse to the longitudinal axis of the weld with the area of the notch located in the weld metal. The length of the notch of the Charpy specimen shall be normal to the surface of the weld (see Fig. 1).

8.3.2 *Coupons Representing the Heat-Affected Zone*:

8.3.2.1 Impact specimens in test plate thicknesses greater than ⅝ in. [16 mm] shall be from coupons removed from a location as near as practical to a point midway between the surface and center thickness. Heat-affected zone coupons for impact specimens shall be taken transverse to the weld and etched to define the heat-affected zone. The notch shall be cut

Copyright ASTM International
Reproduced by IHS under license with ASTM
No reproduction or networking permitted without license from IHS
Not for Resale

TABLE 3 Tensile Requirements

Grade	Heat Treatment[A,B]	Tensile Strength,[C] min, ksi [MPa]	Yield Strength (0.2 % offset), min, ksi [MPa]	Elongation in 2 in. [50 mm], min, %	Reduction of Area, min, %
A1Q	QT	65 [450]	35 [240]	24	35
A2Q	QT	70 [485]	40 [275]	22	35
B2N, B2Q	NT/QT[D]	70 [485]	40 [275]	24	35
B3N, B3Q	NT/QT	70 [485]	40 [275]	24	35
B4N, B4Q	NT/QT	70 [485]	40 [275]	24	35
C1Q	QT	75 [515]	55 [380]	22	35
D1N1, D1Q1	NT/QT	85 [585]	55 [380]	20	35
		115 [795]			
D1N2, D1Q2	NT/QT	95 [655]	75 [515]	18	35
		125 [860]			
D1N3, D1Q3	NT/QT	105 [725]	85 [585]	15	30
		135 [930]			
E1Q	QT	90 [620]	65 [450]	22	40
E2N1, E2Q1	NT/QT	90 [620]	70 [485]	18	35
		120 [825]			
E2N2, E2Q2	NT/QT	105 [725]	85 [585]	15	30
		135 [930]			
E2N3, E2Q3	NT/QT	115 [795]	100 [690]	13	30
		145 [1000]			
E3N	NT	110 [760]	80 [550]	15	35

[A] QT = Quenched and tempered.
[B] NT = Normalized and tempered.
[C] Minimum ksi (MPa), unless range is given.
[D] NT/QT indicates that either a normalized and tempered or quenched and tempered heat treatment may be used.

TABLE 4 Charpy V-Notch Energy Requirements for Standard Size (10 mm by 10 mm) Specimens[A]

Grade	Heat Treatment[B,C]	Effective Section Size, max, in. [mm]	Test Temperature		Energy value, ft·lbf [J], min value for two specimens and min average of three specimens	Energy Value, ft·lbf [J], min for single specimen
			°F	[°C]		
A1Q	QT	1¼ [32]	−50	[−46]	13 [17]	10 [14]
A2Q	QT	3 [75]	−50	[−46]	15 [20]	12 [16]
B2N, B2Q	NT/QT[D]	5 [125]	−100	[−73]	15 [20]	12 [16]
B3N, B3Q	NT/QT	1¼ [32]	−150	[−101]	15 [20]	12 [16]
B4N, B4Q	NT/QT	1¼ [32]	−175	[−115]	15 [20]	12 [16]
C1Q	QT	5 [125]	−50	[−46]	15 [20]	12 [16]
D1N1, D 1Q1	NT/QT	[E]	[E]	[E]	[E]	[E]
D1N2, D 1Q2	NT/QT	[E]	[E]	[E]	[E]	[E]
D1N3, D 1Q3	NT/QT	[E]	[E]	[E]	[E]	[E]
E1Q	QT	[E]	−100	[−73]	30 [41]	25 [34]
E2N1, E 2Q1	NT-QT	5 [125]	−100	[−73]	30 [41]	25 [34]
E2N2, E 2Q2	NT-QT	1¼ [32]	−100	[−73]	20 [27]	15 [20]
E2N3, E 2Q3	NT/QT	1¼ [32]	−100	[−73]	15 [20]	12 [16]
E3N	NT	1¼ [32]	−100	[−73]	20 [27]	15 [20]

[A] Hardenability and residual elements (primarily P & S levels) in some of the grades may limit the maximum section size in which these impact values can be obtained.
[B] QT = Quenched and tempered.
[C] NT = Normalized and tempered.
[D] NT/QT indicates that either a normalized and tempered or quenched and tempered heat treatment may be used.
[E] Requirements shall be subject to agreement between the manufacturer and the purchaser.

normal to the material surface in the heat-affected zone to include as much heat-affected zone as possible in the resulting fracture (see Fig. 2).

8.3.2.2 Where the material thickness permits, the axis of a specimen may be inclined to allow the root of the notch to align parallel to the fusion line (see Fig. 2).

8.4 Test temperature and impact values for section thickness in excess of those specified in Table 4 may be agreed upon between the manufacturer and the purchaser, in which case, Supplementary Requirement S22 shall be specified. Castings shall be marked with this test temperature in accordance with 17.2.

9. Workmanship, Finish, and Appearance

9.1 Castings shall conform to the shapes, tolerances, and sizes indicated by patterns or drawings submitted by the purchaser.

10. Quality

10.1 The surface of the casting shall be examined visually and shall be free of adhering sand, scale, cracks, and hot tears. Other surface discontinuities shall meet the visual acceptance standards specified in the order. Visual Method MSS SP-55 or other visual standards may be used to define acceptable surface

--`,,,,`,-`-`,,`,,`,`,,`---

Copyright ASTM International
Reproduced by IHS under license with ASTM
No reproduction or networking permitted without license from IHS

Not for Resale

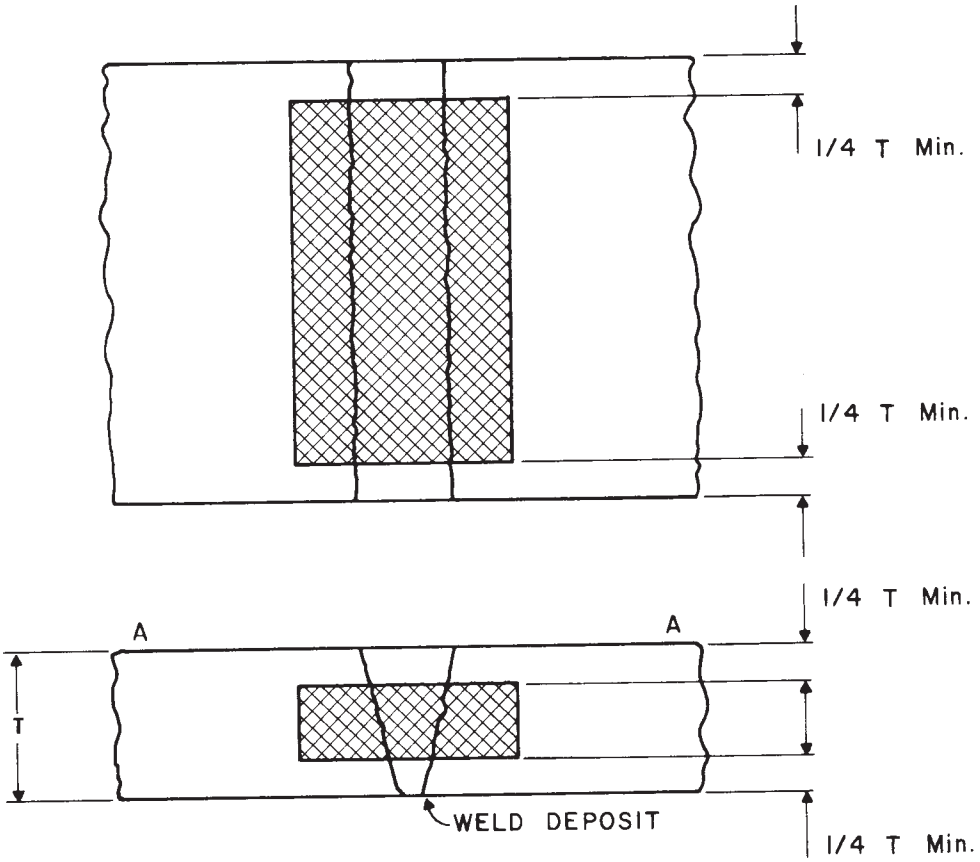

FIG. 1 Charpy V-Notch Specimen Must Be Within Cross-Hatched Zone With Notch in the Weld Metal Perpendicular to Surface A-A

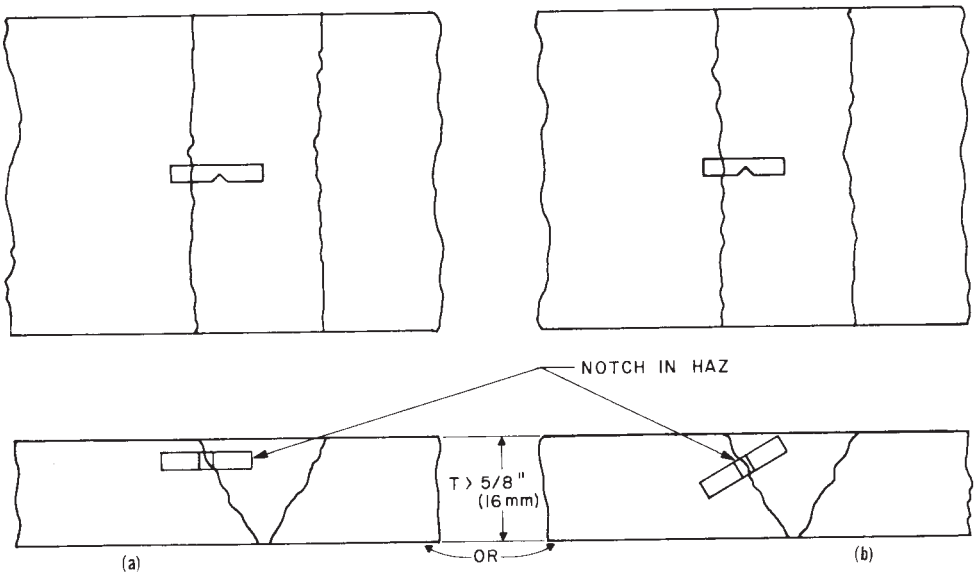

FIG. 2 Location of Notch in Charpy Specimens Shall Be In HAZ Midway Between Center and Surface

discontinuities and finish. Unacceptable visual surface discontinuities shall be removed and their removal verified by visual examination of the resultant cavities. When methods involving high temperatures are used in the removal of discontinuities, the casting shall be preheated to at least the minimum temperatures in Table 5.

10.2 When additional inspection is desired, Supplementary Requirements S4, S5, and S10 may be ordered.

11. Retests

11.1 If the results of the mechanical tests for any heat, lot, or casting do not conform to the requirements specified, retests

Copyright ASTM International
Reproduced by IHS under license with ASTM
No reproduction or networking permitted without license from IHS
Not for Resale

TABLE 5 Minimum Preheat Temperatures

Grade	Minimum Preheat Temperature	
	°F	[°C]
A1Q	50	[10]
A2Q	50	[10]
B2N, B 2Q	300	[150]
B3N, B 3Q	300	[150]
B4N, B 4Q	300	[150]
C1Q	300	[150]
D1N, D 1Q	400	[200]
E1Q	300	[150]
E2N, E 2Q	400	[200]
E3N	50	[10]

are permitted as outlined in Test Methods and Definitions A 370. At the manufacturer's option, castings may be reheat-treated and retested. When castings are reheat-treated, they may not be reaustenitized more than three times without the approval of the purchaser. Testing after reheat treatment shall consist of the full number of specimens taken from locations complying with the specification or order.

12. Test Coupons and Specimen Location

12.1 Test blocks may be cast integrally with the casting or as separate blocks. Test coupons shall be heat treated in production furnaces to the same procedure as the castings they represent.

12.2 *Normalized and Tempered Castings*— Test blocks shall be similar to those shown in Fig. 2 and Table 2 in Specification A 703/A 703M.

12.3 *Quenched and Tempered Castings $T \leq 2$ in.* [*50 mm*]—Requirements in 12.2 apply.

12.4 *Quenched and Tempered Castings $T > 2$ in.* [*350 mm*]—Requirements of 12.2 may be applied when agreed upon between the manufacturer and the purchaser, in place of 12.4.1-12.4.4, one of which otherwise shall apply.

12.4.1 The longitudinal centerline of the tensile test specimen shall be taken at least ¼ *T* from the *T* dimension surface and all of the gage length must be at least 1*T* from any other heat-treated surface, exclusive of the surface opposite the *T* dimension surface. For cylindrical castings, the longitudinal centerline of the specimens shall be taken at least ¼ *T* from the outside or inside and all of the gage length must be at least *T* from the as-heat-treated end (see Fig. 3).

12.4.2 Where separately cast test coupons are used, the dimension shall not be less than 3*T* by 3*T* by *T* and each specimen shall meet the requirements of 12.4.1. The test coupon shall be of the same heat of steel and shall receive substantially the same casting practices as the production casting it represents. Centrifugal castings may be represented by statically cast coupons (see Fig. 4).

12.4.3 Where specimens are to be removed from the body of the casting, either the requirements of 12.4.1 shall be met or a steel thermal buffer pad or thermal insulation or other thermal barriers shall be used during heat treatment. Steel thermal buffer pad shall be a minimum of *T* by *T* by 3*T* in length and shall be joined to the casting surface by a partial penetration weld completely sealing the buffered surface. Test specimens shall be removed from the casting in a location adjacent to the center third of the buffer pad. They shall be located at a minimum distance of ½ in. [13 mm] from the buffered surface and ¼ *T* from other heat-treated surfaces (see Fig. 5). When thermal insulation is used, it shall be applied adjacent to the

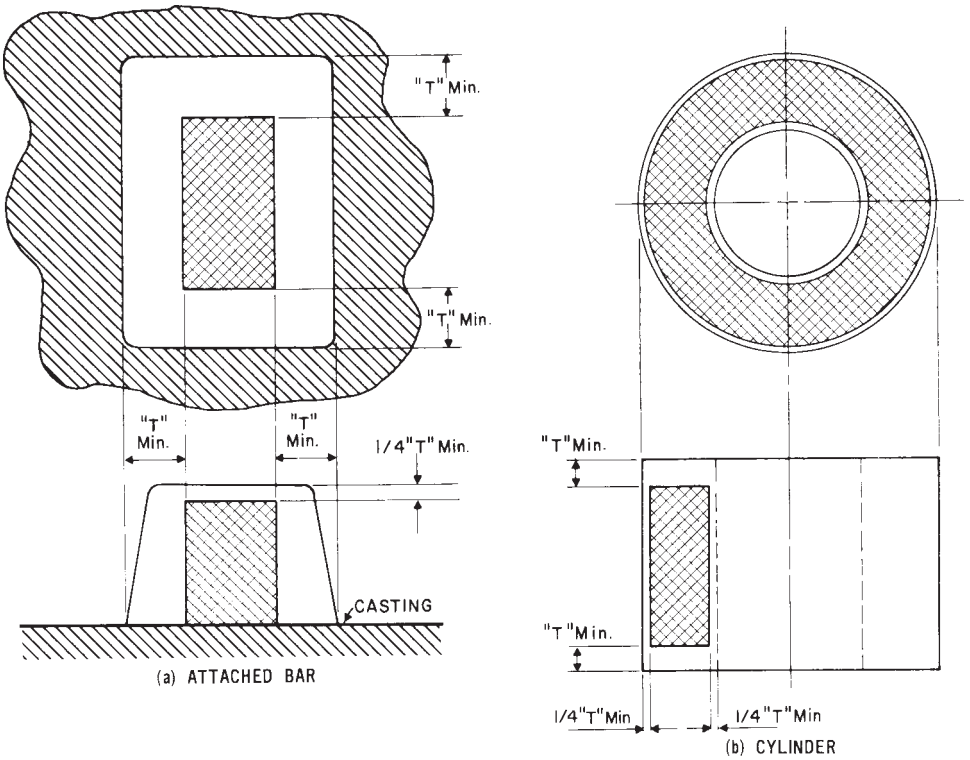

FIG. 3 Longitudinal Axis and Gage Length of Test Specimen Must Be Within Cross-Hatched Zone

Copyright ASTM International
Reproduced by IHS under license with ASTM
No reproduction or networking permitted without license from IHS
Not for Resale

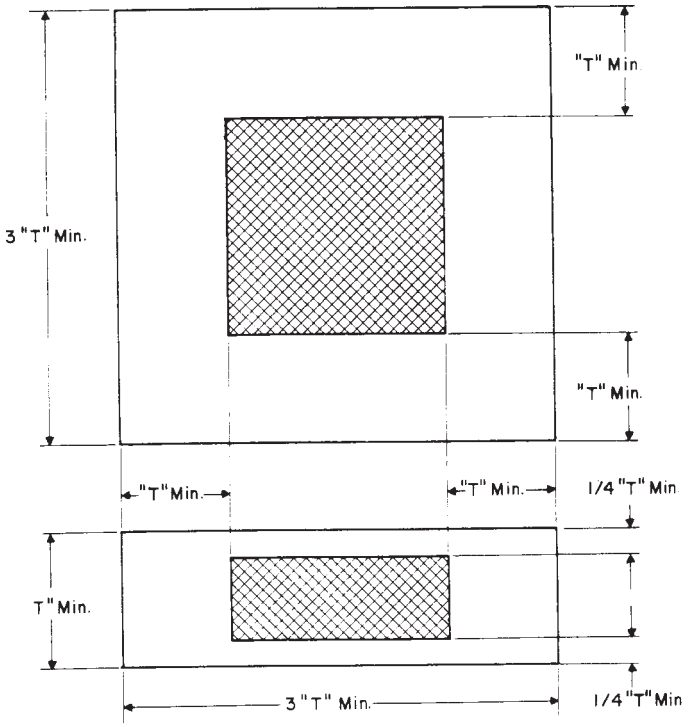

FIG. 4 Longitudinal Axis and Gage Length of Test Specimen Must Be Within Cross-Hatched Zone

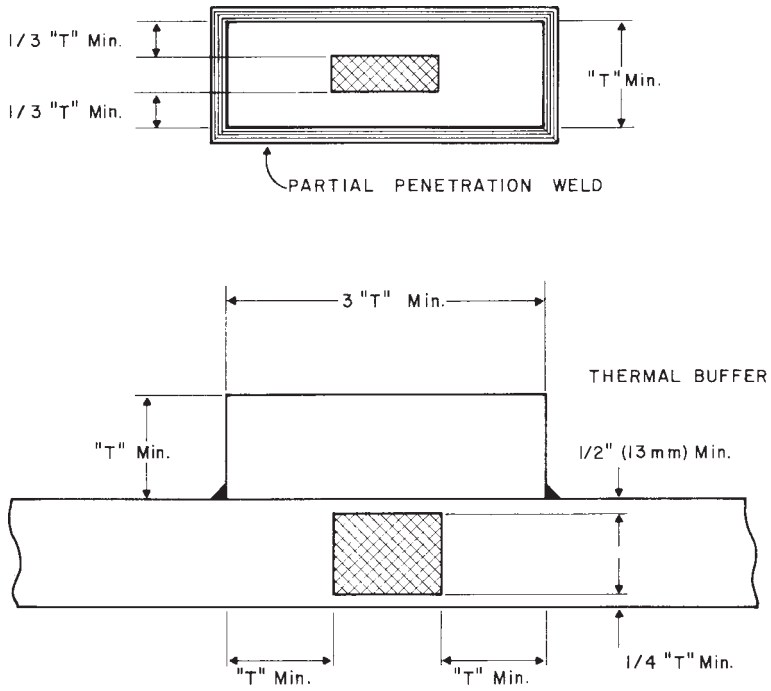

FIG. 5 Thermal Buffer Pads—Longitudinal Axis and Gage Length of Test Specimen Must be Within Cross-Hatched Zone

casting surface where the test specimens are to be removed. The producer shall demonstrate that the cooling rate of the test specimen location is no faster than that of specimens taken by the method described in 12.4.1.

12.4.4 *Test Specimens From Castings*—When agreed upon by the manufacturer and the purchaser, castings that are cast or machined to essentially the finished configuration prior to heat treatment shall have test specimens removed from a prolongation or other stock on the casting at a location below the nearest heat-treated surface indicated on the order. The specimen location shall be at a distance below the nearest heat-treated surface equivalent to at least the greatest distance that the indicated high-tensile-stress surface will be from the nearest heat-treated surface and a minimum of twice this distance from

Copyright ASTM International
Reproduced by IHS under license with ASTM
No reproduction or networking permitted without license from IHS
Not for Resale

a second heat-treated surface, except that the test specimens shall be no nearer than ¾ in. [19 mm] to a heat-treated surface and 1½ in. [38 mm] from a second heat-treated surface (see Fig. 6).

13. Hydrostatic Tests for Pressure-Containing Castings

13.1 After machining, each pressure-containing casting shall be tested by the organization specified and to the test pressure requirements specified on the drawing or the purchase order and shall not leak.

13.2 It is realized that the foundry may be unable to perform the hydrostatic test prior to shipment, or that the purchaser may wish to defer testing until additional work or machining has been performed on the casting. Castings ordered in the rough state for final machining by the purchaser may be tested hydrostatically prior to shipment by the manufacturer at pressures to be agreed upon with the purchaser. However, the foundry is responsible for the satisfactory performance of the castings under the final test required in 13.1.

14. Repair by Welding

14.1 *Qualification*—Repairs shall be made using procedures and welders qualified under Practice A 488/A 488M or in accordance with the ASME Boiler and Pressure Vessel Code, Section IX.

14.2 *Inspection*—Weld repairs shall be inspected to the same quality standards as used to inspect the casting, except when radiography (see Supplementary Requirement S5) is specified in the order for the original casting. Radiography of weld repairs shall be performed only for the examination of major repairs (see 14.3).

14.3 *Major Weld Repairs*—Weld repairs shall be considered major when the depth of the cavity prepared for welding exceeds 20 % of the wall thickness or 1 in. [25 mm], whichever is smaller, or when the extent of cavity exceeds approximately 10 in. [65 cm], or when a pressure-containing casting leaks on hydrostatic test.

14.4 *Postweld Heat Treatment*—All castings with repair welds shall be thermally stress relieved or reheat-treated completely in accordance with 5.2 and the welding procedure qualification used.

15. Inspection

15.1 The manufacturer shall afford the purchaser's inspector all reasonable facilities necessary to satisfy that the material is being produced and furnished in accordance with this specification. Foundry inspection by the purchaser shall not interfere unnecessarily with the manufacturer's operations. All tests and inspections, with the exception of product analysis and hydrostatic tests, shall be made at the place of manufacture unless otherwise agreed.

16. Rejection and Rehearing

16.1 Any rejection based on the manufacturer's test report or product analysis shall be reported to the manufacturer within 30 days from receipt of the test reports by the purchaser.

16.2 Castings that show unacceptable discontinuities subsequent to their acceptance at the manufacturer's works will be rejected, and the manufacturer shall be notified within 30 days after discovery of the rejectable condition.

16.3 Product analysis samples (6.2) representing material that does not comply with this specification shall be held for two weeks from the date of transmission of the test report. In case of dissatisfaction with the results of the tests, the manufacturer may claim for a rehearing within that time.

17. Product Marking

17.1 Castings shall be marked with the manufacturer's name or identification mark, and for material identification with the grade symbol, that is, A1Q, B2N, C1Q, etc. If stamped, low-stress stamps shall be used on a raised pad. A heat number, or a serial number that is traceable to the heat number, shall be marked individually on all castings weighing 50 lb [25 kg] or more. Castings weighing less than 50 lb shall be marked with either the heat number or a lot number that will identify the casting as to the month in which it was poured. When lot number identification is used, test reports shall show both the heat number and the lot number, and shall carry a certification that castings marked with the lot number meet all the requirements of the specification. Marking shall be in such positions as not to injure the usefulness of the casting.

17.2 Marking shall also include the test temperature, if it is other than the standard test temperature or if no test temperature is specified in Table 4. A prefix O to the test temperature shall indicate a less than 0° value.

18. Keywords

18.1 alloy steel; carbon steel; ferritic; low temperature service; martensitic stainless steel; pressure containing; stainless steel; steel castings

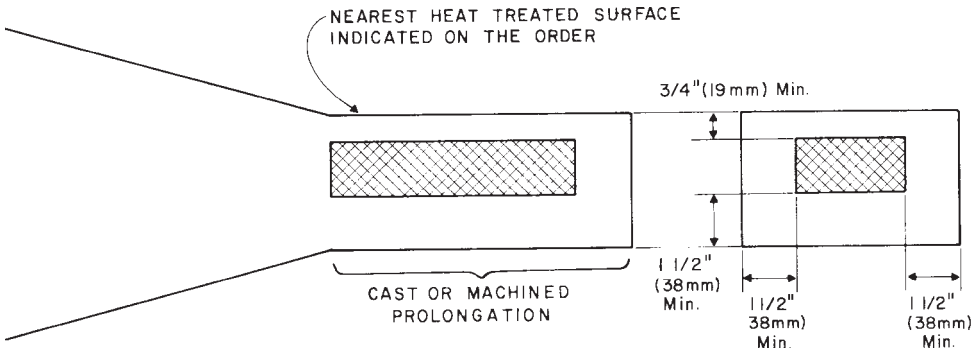

FIG. 6 Prolongation Test Specimen—Longitudinal Axis and Gage Length of Test Specimen Must Be Within Cross-Hatched Zone

Copyright ASTM International
Reproduced by IHS under license with ASTM
No reproduction or networking permitted without license from IHS
Not for Resale

SUPPLEMENTARY REQUIREMENTS

Supplementary requirements shall be applied when specified by the purchaser. Details of these supplementary requirements shall be agreed upon between the manufacturer and the purchaser. The specified tests shall be made by the manufacturer before shipment of the castings.

S1. Unspecified Elements

S1.1 Limits may be established for elements not specified for the grade ordered by agreement between the manufacturer and the purchaser. The results of the analysis for the agreed-upon elements shall be reported.

S4. Magnetic Particle Examination

S4.1 Castings shall be examined for surface and near surface discontinuities by magnetic particle test method. The examination shall be in accordance with Guide E 709, and the types and degrees of discontinuities considered may be judged by Reference Photographs E 125. The extent of examination and the basis for acceptance shall be agreed upon. A specification that may be used as a basis for such agreement is MSS SP-53.

S5. Radiographic Examination

S5.1 Castings shall be examined for internal defects by means of X rays or gamma rays. The procedure shall be in accordance with Guide E 94 and Method E 142, and the types and degrees of discontinuities considered may be judged by the Reference Radiographs E 446, E 186, or E 280, except that repair welds shall be judged by Reference Radiographs E 390. The extent of coverage and the basis for acceptance shall be agreed upon. A specification that may be used as a basis for such agreement is MSS SP-54.

S5.2 Radiography may be performed prior to heat treatment and shall be performed at the stage of manufacture defined in this subparagraph.

S5.3 Castings may be radiographed prior to finish machining at limiting thickness as follows: thicknesses less than 6 in. [150 mm] shall be radiographed within 20 % of the finished thickness, and thicknesses 6 in. [150 mm] and over shall be radiographed within 10 % of the finished thickness. Penetrameters shall be based on final thickness.

S5.4 Radiographic examination of castings for pumps and valves may be performed in the as-cast or rough-machined thickness as follows; for thicknesses over 2 in. [50 mm], acceptance shall be based on Reference Radiographs for the next lesser thickness range (for example, if the section being radiographed exceeds 4½ in. [114 mm] use Reference Radiographs E 186). The penetrameters shall be based on the thickness of the section being radiographed. For thicknesses 2 in. [50 mm] or less, Reference Radiographs E 446 shall be used with penetrameters based on the final section thickness.

S5.5 Weld ends for a minimum distance of *t* or ½ in. [13 mm], whichever is more (where *t* is the design section thickness of the weld), from the final welding end shall be radiographed at a thickness within the limits given in S5.3. As an alternative, the weld ends may be radiographed in the as-cast or rough-machined thickness in accordance with S5.4. Penetrameters shall be based on the final section thickness.

S8. Lateral Expansion and Percent Shear Area

S8.1 The test temperature, specimen location, and method of testing shall be as stated in Section 8.

S8.2 *Lateral Expansion:*

S8.2.1 Lateral expansion shall be determined and reported for information, if no minimum is specified.

S8.2.2 The lateral expansion value shall be agreed upon. The value determined shall meet the specified value and shall be reported to the purchaser.

S8.3 *Percent Shear Area:*

S8.3.1 Percent shear area shall be determined and reported for information, if no minimum is specified.

S8.3.2 The percent shear area value shall be agreed upon. The value determined shall meet the specified value and shall be reported to the purchaser.

S9. Drop Weight Test

S9.1 Drop weight test properties shall be determined from each heat by preparing and testing either Type P1, P2, or P3 specimens in accordance with Test Method E 208. The crack starter weld shall be deposited on the specimen surface that was nearest to and less than ½ in. [13 mm] from the as-cast surface. Each test shall consist of at least two specimens tested at a temperature agreed upon. Each specimen shall exhibit a "no break" performance.

S10. Examination of Weld Preparation

S10.1 Magnetic particle or liquid penetrant examination of the cavities prepared for welding shall be performed to verify removal of those discontinuities found unacceptable by the inspection method specified for the casting. The method of performing magnetic particle or liquid penetrant examination shall be in accordance with Guide E 709 or Test Method E 165. Unless other degrees of shrinkage or types of discontinuities found in the cavities are specified, Type II, Internal Shrinkage, of Reference Photographs E 125, of Degree 2 in sections up to 2 in. [50 mm] thick and of Degree 3 in sections over 2 in. thick shall be acceptable.

S11. Certification

S11.1 The manufacturer's certification shall be furnished to the purchaser stating that the material was manufactured, sampled, tested, and inspected in accordance with the material specification (including year date) and was found to meet the requirements.

S11.2 The test report shall contain the results of the actual chemical analysis, tension and impact tests, and other tests ordered by the purchaser.

Copyright ASTM International
Reproduced by IHS under license with ASTM
No reproduction or networking permitted without license from IHS
Not for Resale

S11.3 The test report shall be signed by an authorized agent of the seller or manufacturer.

S11.4 The test report shall be furnished within five working days of shipment of the castings.

S12. Prior Approval of Major Weld Repairs

S12.1 Major weld repairs shall be subject to the prior approval of the purchaser.

S13. Hardness Test

S13.1 Hardness measurements at specified locations of the castings shall be made in accordance with Test Methods and Definitions A 370 and reported.

S14. Tension Test from Each Heat and Heat-Treatment Charge

S14.1 One tension test shall be made for each heat and heat-treatment charge.

S15. Heat-Treatment Furnace Records

S15.1 Heat-treatment furnace records showing a plot of time and temperature shall be submitted to the purchaser.

S17. Tension Test from Castings

S17.1 This supplementary requirement is intended where heavy section properties are to be guaranteed. In addition to the tensile test required in Section 7, test material shall be cut from heat treated castings instead of test coupons. The mechanical properties and location for the test material shall be agreed upon.

S18. Heat Treatment

S18.1 Test specimens shall be heat treated together with the castings they represent. Heat-treated specimens shall be tested and shall meet the tensile and impact properties specified.

S18.2 The remaining test specimens from S18.1 representing the casting shall be treated thermally after the final (foundry) heat treatment to simulate heat treatments below the critical temperature, which the casting may receive during fabrication, and then tested for mechanical properties. Time, temperature, and cooling rate shall be as stated in the order. In the case of post-weld heat treatment, the total time at temperature or temperatures for the test material shall be at least 80 % of the total time at temperature or temperatures during actual postweld heat treatment of the fabrication of which the casting or castings are a part. The total time at temperature or temperatures for the test material may be performed in a single cycle. When this supplementary requirement is specified, the welding qualification test metal must be processed in the same manner.

S20. Magnetic Particle Inspection after Liquid Quench

S20.1 Castings that are liquid quenched shall be examined by magnetic particle inspection for quench cracks. Examination shall be in accordance with Supplementary Requirement S4.

S22. Charpy Impact Test

S22.1 Impact properties at temperatures other than specified in Table 3, or impact properties for grades that do not have specified test temperatures or impact values, shall be determined on each heat by testing a set of three Charpy V-notch specimens. It is preferable to select temperatures in 25°F [14°C] increments with standard test temperatures being −25°F, −50°F, −75°F, and −100°F [−32°C, −46°C, −59°C, and −73°C], etc.

S22.2 All requirements specified in Section 8 shall apply, including impact requirements for welding procedure qualification test at the specified temperature. Castings shall be marked with the lowest test temperature at which the material met the impact requirements in accordance with Section 17.

S24. Welding Materials

S24.1 Each lot or batch of welding material used shall be tested and shall conform to the ultimate tensile strength and impact property requirements of the base material.

S24.2 Test specimens shall be prepared from locations in the test coupons prepared as required by Specifications SFA-5.1 or SFA-5.5, as applicable, of ASME, Section II, Part C. Test coupons shall be postweld heat treated in the same manner as required by the welding procedure. One all-weld-metal tensile test shall be made and shall meet the tensile strength requirements of the base material specification.

S24.3 When impact tests are required for the base material, all-weld-metal impact tests shall be made and the results shall meet the requirements of the base material. When five specimens are used, the average value shall be computed by discarding the extreme lowest value and extreme highest value.

S24.4 Tests performed on welding material in the qualification of weld procedures will satisfy the test requirements for the lot, heat, or combination of heat and batch of welding material used, provided the tests meet the requirements.

S28. Weld Charts

S28.1 Major weld repairs shall be documented by means of sketches showing location and extent of the weld. Documentation shall be submitted to the purchaser at the completion of the order.

Copyright ASTM International
Reproduced by IHS under license with ASTM
No reproduction or networking permitted without license from IHS
Not for Resale

ASTM International takes no position respecting the validity of any patent rights asserted in connection with any item mentioned in this standard. Users of this standard are expressly advised that determination of the validity of any such patent rights, and the risk of infringement of such rights, are entirely their own responsibility.

This standard is subject to revision at any time by the responsible technical committee and must be reviewed every five years and if not revised, either reapproved or withdrawn. Your comments are invited either for revision of this standard or for additional standards and should be addressed to ASTM International Headquarters. Your comments will receive careful consideration at a meeting of the responsible technical committee, which you may attend. If you feel that your comments have not received a fair hearing you should make your views known to the ASTM Committee on Standards, at the address shown below.

This standard is copyrighted by ASTM International, 100 Barr Harbor Drive, PO Box C700, West Conshohocken, PA 19428-2959, United States. Individual reprints (single or multiple copies) of this standard may be obtained by contacting ASTM at the above address or at 610-832-9585 (phone), 610-832-9555 (fax), or service@astm.org (e-mail); or through the ASTM website (www.astm.org).

Copyright ASTM International
Reproduced by IHS under license with ASTM
No reproduction or networking permitted without license from IHS
Not for Resale