Designation: A 74 – 08

Endorsed by the
Cast Iron Soil Pipe Institute
American Association State
Highway and Transportation Officials Standard
AASHTO No.: M 263-77

Standard Specification for Cast Iron Soil Pipe and Fittings[1]

This standard is issued under the fixed designation A 74; the number immediately following the designation indicates the year of original adoption or, in the case of revision, the year of last revision. A number in parentheses indicates the year of last reapproval. A superscript epsilon (ε) indicates an editorial change since the last revision or reapproval.

This standard has been approved for use by agencies of the Department of Defense.

1. Scope

1.1 This specification covers cast iron soil pipe and fittings for use in gravity flow plumbing, drain, waste and vent sanitary, and storm water applications. It establishes standards covering material, manufacture, mechanical and chemical properties, coating, test methods, inspection, certification, product markings, dimensions, and dimensional tolerances for extra heavy and service cast iron soil pipe and fittings. These pipe and fittings are not intended for pressure applications as the selection of the proper size for sanitary drain, waste, vent, and storm drain systems allows free air space for gravity drainage.

1.2 This specification covers pipe and fittings of the following patterns and, when so designated, shall apply to any other patterns that conform with the applicable requirements given in this specification.

1.2.1 *Pipe*:

	Tables
Extra heavy, 2½ ft (0.75 m), 3½ ft (1.0 m), 5 ft (1.5 m), 10 ft (3.0 m) lengths	1, 2
Service, 2½ ft (0.75 m), 3½ ft (1.0 m), 5 ft (1.5 m), 10 ft (3.0 m)	1, 2
Outside dimensions (for detailing)	X1.1

1.2.2 *Fittings*:

	Tables
¼ bends; long ¼ bends	3, 4
¼ bends, long low-hub	5
¼ bends, low heel; high heel	6, 7
¼ bends, short sweep; long sweep	8
¼ bends, reducing long sweep	9
⅕ bends	10
⅙ bends	10
⅛ bends; long ⅛ bends	11
1/16 bends	11
Y branches	12, 13
Y branches, combination ⅛ bends, single	14
Y branches, combination ⅛ bends, double	14
Sanitary T branches, single	15
Sanitary T branches, double	15
Sanitary T branches, cleanout	16
Tapped sanitary T branches, single	17
Tapped sanitary T branches, double	17
T branches, single and double	18
Tapped T branches, single	19
Tapped T branches, double	19
T branches, cleanout	20
-45° offset fitting	21
Double hubs	22
Long double hubs	22
Reducers	23
Increasers	24, 25
P traps	26, 27
Deep seal P traps	28
Running traps	29
Screw plugs (brass)	30
Blind plugs	31
Iron-body ferrules	32
Side inlets	Fig. 3
Closet bends	33
Tapping bosses	34
Reducing ¼ bend SV	35
Combination Y and ⅛ bend	36
'H' branch fitting	37

1.3 The values stated in inch-pound units are to be regarded as standard. The values given in parentheses are mathematical conversions to SI units that are provided for information only and are not considered standard.

2. Referenced Documents

2.1 *ASTM Standards:* [2]

A 48/A 48M Specification for Gray Iron Castings

A 644 Terminology Relating to Iron Castings

D 1248 Specification for Polyethylene Plastics Extrusion Materials for Wire and Cable

E 8 Test Methods for Tension Testing of Metallic Materials

E 2349 Practice for Safety Requirements in Metal Casting Operations: Sand Preparation, Molding, and Core Making;

[1] This specification is under the jurisdiction of ASTM Committee A04 on Iron Castings and is the direct responsibility of Subcommittee A04.12 on Pipes and Tubes.

Current edition approved May 1, 2008. Published June 2008. Originally approved in 1917. Last previous edition approved in 2006 as A 74 – 06.

[2] For referenced ASTM standards, visit the ASTM website, www.astm.org, or contact ASTM Customer Service at service@astm.org. For *Annual Book of ASTM Standards* volume information, refer to the standard's Document Summary page on the ASTM website.

Copyright © ASTM International, 100 Barr Harbor Drive, PO Box C700, West Conshohocken, PA 19428-2959, United States.

Copyright ASTM International
Provided by IHS under license with ASTM
No reproduction or networking permitted without license from IHS
Not for Resale

Melting and Pouring; and Cleaning and Finishing

2.2 *Federal Standard:*[3]

Fed. Std. No. 123 Marking for Shipment (Civil Agencies)

2.3 *Military Standard:*[3]

MIL-STD-129 Marking for Shipment and Storage

2.4 *ANSI/ASME Standard:*[4]

B1.20 Pipe Threads

3. Terminology

3.1 *Definitions of Terms Specific to This Standard:*

3.2 *manufacturer*, *n*—the entity that casts the pipe and fittings covered by this standard.

4. Materials and Manufacture

4.1 The pipe and fittings shall be iron castings suitable for installation and service for sanitary, storm drain, waste, and vent piping applications. The pipe and fittings shall meet all applicable requirements and tests given in this specification.

4.2 The castings shall be made of cast iron, produced by an established commercial method that provides control over chemical and physical properties. Cast iron is a generic term for a series of alloys as defined in Terminology A 644 and includes gray iron as well as ductile iron. The castings shall be sound, true to pattern, and of compact close grain that permits drilling and cutting by ordinary methods. The interior surface shall be reasonably smooth and free from defects that would make the castings unfit for the use for which they are intended.

4.3 To minimize the possibility of introducing radioactive material to a melting operation, ferrous scrap, pig iron, and any recycled ferrous material shall be screened for radioactivity with suitable detection devices operated in accordance with the detection manufacturer's instructions. Written operating and maintenance procedures for the detection equipment shall be provided to the purchaser for review when requested. Records shall be maintained by load of these tests for a period of seven years.

4.4 Material that is found contaminated with radioactivity shall not be used to produce products covered by this specification.

4.5 Analysis of castings after the time of production shall not be used to determine compliance to this specification.

4.6 Foundries manufacturing products to this standard within the United States shall comply to all local, state, and national safety laws and regulations and to the requirements of E 2349.

4.7 Foundries manufacturing products to this standard outside the United States shall comply with all safety laws and regulations existing in the country where the products are being produced.

4.8 Pipe and fittings shall not be patched, filled, or welded to correct cosmetic or material defects that occur during the course of manufacturing.

5. Mechanical Properties

5.1 *Mechanical Tests for Gray Iron*—The manufacturer shall perform tests to determine mechanical properties of the gray iron used in the manufacture of gray iron soil pipe and fittings. Tension test specimens shall be employed. The manufacturer shall maintain a record of mechanical tests for a minimum of 7 years.

5.1.1 *Tensile Strength Test*—The tensile strength shall be not less than 21 000 psi (145 MPa).

5.1.2 Tension test reports shall include breaking load of test bars, machined diameter of test bar, and calculated tensile strength.

5.1.3 Analysis of castings or test bars after the time of production shall not be used as evidence of compliance to this specification.

6. Chemical Test for Gray Iron

6.1 The manufacturer shall perform tests to determine the significant chemical constituents of the gray iron used in the manufacture of gray iron soil pipe and fittings. Analysis shall be performed at the minimum of once per lot as defined in this specification. The manufacturer shall maintain a record of chemical tests performed for a minimum of 7 years. The test results shall conform to the following requirements as to chemical composition:

Phosphorous (P)	0.38 % Maximum
Sulfur (S)	0.15 % Maximum
Chromium (Cr)	0.50 % Maximum
Titanium (Ti)	0.10 % Maximum
Aluminum (Al)	0.50 % Maximum
Lead (Pb)	0.015 % Maximum
Carbon Equivalent	4.10 % Minimum by mass

Note: Carbon equivalent for gray iron = %C+%Si/3+%P/3

6.1.1 Chemical tests shall be performed at the time of production of the castings covered by this specification.

6.1.2 Analysis of castings after the time of production shall not be used as evidence of compliance to this specification.

7. Dimensions and Permissible Variations

7.1 *Pipe*:

7.1.1 Single-hub pipe shall have a hub at one end and a spigot at the other. Double-hub pipe shall have a hub at each end. Hubs shall have lead grooves. The inner end of hub shall be either with or without a centering recess, all combinations of which shall make a satisfactory leakproof joint. Hub and barrel shall be cast in one piece (see Fig. 1).

7.1.2 Single-hub pipe shall be of 2½-ft (0.75-m), 3½-ft (1.00-m), 5-ft (1.5-m), and 10-ft (3.0-m) nominal laying lengths. The laying length shall be as shown in Table 1 and shall be within the tolerances on laying length specified in Table 2. Double-hub pipe shall be of the same overall length as single-hub pipe of the same size. Its laying length shall be 5 ft minus the two telescoping lengths (dimension *Y*), or 10 ft minus the telescoping length (dimension *Y*). Other dimensions shall be as specified in Table 1 as applicable, and be within the tolerances specified in Table 2. The dimensions shall apply to pipe before any coating is applied.

7.1.3 Pipe shall be straight to the extent that any deflections in the barrel of a 2½-ft (0.75-m), 3½-ft (1.00-m), and 5-ft (1.5-m) length of pipe shall not exceed ¼ in. (6.4 mm) for sizes

[3] Available from Standardization Documents Order Desk, DODSSP, Bldg. 4, Section D, 700 Robbins Ave., Philadelphia, PA 19111-5098, http://www.dodssp.daps.mil.

[4] Available from American National Standards Institute (ANSI), 25 W. 43rd St., 4th Floor, New York, NY 10036, http://www.ansi.org.

Copyright ASTM International
Provided by IHS under license with ASTM
No reproduction or networking permitted without license from IHS
Not for Resale

4 in. (102 mm) and larger, and shall not exceed 5⁄16 in. (7.9 mm) for smaller sizes; for 10-ft lengths, deflections in the barrel shall not exceed ½ in. (12.7 mm) for sizes 4 in. and larger, nor exceed ⅝ in. (15.9 mm) for smaller sizes.

7.2 *Fittings*:

7.2.1 *Dimensions of Fittings*—All fittings shall conform to the dimensions specified for hub and spigot ends in Table 1 and Table 2, as applicable. Fittings of the patterns specified in this specification shall conform to the applicable dimensions in Tables 3-37 inclusive, and to the tolerances in Table 2. Other patterns (Note 1) shall conform to Table 1, as applicable, for hub and spigot dimensions, and for wall thickness throughout, and to dimension *R′*, Tables 15-17, for the minimum radius of any drainage inlets that such fittings shall be permitted to provide. All fittings shall have spigot ends of sufficient length to provide adequate room for making joints. All dimensions given in this specification shall apply to fittings before any coating is applied.

NOTE 1—Such as, for example, fittings known in the trade as "specials," when designated as being in conformity with this specification.

7.2.2 *Water Seal and Traps*—Traps shall have water seals as follows:

Trap Size, in. (mm)	Minimum Water seal, in. (mm)
2 (50)	2 (50)
3 to 6 (75 to 150), incl	2½ (64)
8 to 12 (200 to 300), incl	3 (75)

7.2.3 *Ends of Fittings*—Hubs shall have lead grooves. The inner end of hub shall be permitted to be either with or without a centering recess, all combinations of which shall enable the installer to make a satisfactory joint. Tapped openings shall conform to 7.2.4. It is permissible to increase the wall thickness on the inside surface of fittings having one or more plain ends. The increased thickness shall not reduce the minimum *B* dimension in Table 1 in excess of 0.10 in. for sizes 8 in. and smaller, and 0.15 in. for 10 in. and larger, and shall not extend more than 4¼ in. from the plain end. The increased thickness shall be tapered and offer no obstruction to flow. Inside diameters complying with service or extra heavy inside diameters shall be permitted on 12 and 15-in. sizes only.

7.2.4 *Pipe Threads*—Screw plugs and tapped openings in fittings shall have American Standard taper pipe threads. The threads shall be in accordance with ANSI/ASME B1.20 of the current issue.

7.2.5 Internal threads shall be chamfered on the entering end approximately to the major diameter of the thread, at an angle of approximately 45° with the axis of the thread, and the entering end of external threads shall be similarly chamfered approximately to be minor diameter of the thread, for easy entrance in making a joint and for protection of the thread. The chamfer shall be concentric with the thread and shall be included in measurements of thread length.

8. Methods of Specifying Fittings

8.1 *Method of Specifying Sizes of Fittings of More than One Size*—The sizes are designated by the order of listing, as follows:

8.1.1 Branch and tapped fittings:

8.1.1.1 Size of run (Note 2), and

8.1.1.2 Size of branch.

8.1.2 Reducers, increasers, and offset fittings:

8.1.2.1 Size of inlet or run (Note 2),

8.1.2.2 Size of outlet or offset distance,

8.1.2.3 Length, if supplied in more than one length.

NOTE 2—The run is that portion of the fitting that forms part of the main drain, waste, or vent line. The spigot end is ordinarily the outlet.

8.2 *Method of Specifying Hand of Fittings with Side Inlets and Outlets*—When placed in the position described below, if the side inlet or outlet appears on the right, it is a right-hand fitting; if on the left, it is a left-hand fitting.

8.2.1 *Bends and Offsets*—Place the fitting with hub facing toward the observer and the spigot end lower than the hub.

8.2.2 *Branch Fittings*—Place the branch toward the observer and the spigot end lower than the hub.

8.2.3 *Traps*—Place in the position in which the trap is installed, with the hub toward the observer.

8.2.4 The fittings shown in Fig. 2 have right-hand inlet or cleanout. Left-hand fittings have these openings on the side opposite to that shown. For details of side inlets, see Fig. 2.

9. Coating

9.1 The pipe and fittings shall be uniformly coated with a material suitable for the purpose, that is adherent, not brittle, and without a tendency to scale. The coating shall not contain asbestos above current MSDS reportable levels. Material safety data sheets shall be furnished by the coating manufacturer when requested. The coating shall be evenly and smoothly applied to all surfaces except threaded openings.

10. Sampling

10.1 Chemical and mechanical tests shall be made regularly and at sufficiently close intervals for adequate determinations of the significant chemical constituents and properties of the cast iron. A specimen taken from a finished product often does not produce the same results as a specimen formed by the method used for sample preparation and is not acceptable for the purpose of testing to this standard. Records of chemical analysis shall be maintained by the manufacturer by lot. Copies of these analyses shall be furnished to the purchaser when requested.

10.2 A lot shall consist of one of the following:

10.2.1 All the metal poured from a single heating in a batch type furnace,

10.2.2 All the metal from two or more batch type melting furnaces poured into a single ladle or a single casting.

10.2.3 All the metal poured from a continuous melting furnace for a given period of time between changes in charge, processing conditions, aim-for chemistry, or 4 hours, whichever is the shorter period.

11. Test Methods

11.1 *Gray Iron*:

11.1.1 *Tensile Strength Test*—Test bars shall be cast in accordance with the requirements of Specification A 48/A 48M. See Fig. 3 (Tension Test Specimens) for the machined

Copyright ASTM International
Provided by IHS under license with ASTM
No reproduction or networking permitted without license from IHS
Not for Resale

test bar dimensions and as cast test bar dimensions. The tensile strength shall be determined in accordance with Test Methods E 8.

11.1.2 Tension test reports shall include breaking load of test bars, machined diameter of test bar, and calculated tensile strength.

12. Inspection

12.1 *Inspection and Test by the Manufacturer*—Pipe and fittings shall be inspected to verify compliance with this specification. The manufacturer shall maintain a record of all inspections.

12.2 *Pipe Inspection*—At regular intervals (not to exceed 12 h) during the course of production, sample pieces of each size of pipe or pipes being produced shall be selected randomly for inspection. Each pipe selected shall be measured by suitable gages and all dimensions detailed in Tables 1 and 2 of this specification verified to comply with the requirements of this specification. The inspection records shall be maintained by the manufacturer for a period of seven years.

12.3 *Fitting Inspection*—At regular intervals (not to exceed 12 h) during the course of production, sample pieces of each size and configuration of fitting being produced shall be selected randomly for inspection. Each fitting selected shall be measured by suitable gages to verify that the laying length (as detailed in Tables 3-37), and all applicable dimensions detailed in Tables 1 and 2 of this specification comply with the requirements of this specification. The inspection records shall be maintained by the manufacturer for a period of seven years.

12.4 *Marking Inspection*—Inspection shall include verification that the markings on pipe and fittings comply with Section 14 of this specification.

13. Certification

13.1 Upon request, the purchaser shall be furnished certification, by the manufacturer, stating samples representing each lot have been tested and inspected as indicated in this specification and the requirements have been met. If requested by the purchaser, certification shall be accompanied by test reports as prepared in accordance with the Sections 11 and 12 of this specification. Tension test reports shall include breaking load machined diameters of test bars and calculated tensile strength. Certification shall include the legal name and address of the manufacturer.

14. Product Marking

14.1 Each length of pipe and each fitting shall be plainly marked with the country of origin, the manufacturer's name or registered trademark by which the manufacturer can be readily identified after installation. The markings shall be adequate identification of the manufacturer of the pipe and fittings if it readily identified the manufacturer to the end user of the product. Each length of pipe and each fitting shall be plainly marked with letters to indicate the proper classification, as follows:

XH	Extra Heavy
SV	Service

The marking shall be cast, stenciled, or otherwise applied on the pipe so as to be clear and legible after installation. The marking shall be cast with raised letters on fittings and shall be clear and legible after installation and located away from the spigot end so as not to interfere with proper joining upon installation.

14.2 Each pipe shall be marked with the date of manufacture. The marking shall be stenciled on the pipe or otherwise applied to be clear and legible. The marking shall be a minimum of ¾-in. size.

15. Packaging and Package Marking

15.1 *Government Procurement*—Unless otherwise specified in the contract, the material shall be packaged in accordance with the supplier's standard practice that will be acceptable to the carrier at lowest rates. Containers and packing shall comply with Uniform Freight Classification Rules[5] or National Motor Freight Classification Rules.[6] Marking for shipment of such material shall be in accordance with Fed. Std. No. 123 for civil agencies and MIL-STD-129 for military agencies.

16. Keywords

16.1 cast iron; fitting; hub and spigot pipe; pipe; soil pipe

[5] Available from The Uniform Classification Commission, Room 1106, 222 S. Riverside Plaza, Chicago, IL 60606.

[6] Available from National Motor Freight Traffic Association (NMFTA), 1001 N. Fairfax St., Alexandria, VA 22314, http://www.nmfta.org.

Copyright ASTM International
Provided by IHS under license with ASTM
No reproduction or networking permitted without license from IHS
Not for Resale

TABLE 1 Dimensions of Hubs, Spigots, and Barrels for Extra-Heavy and Service Cast Iron Soil Pipe and Fittings, in.

NOTE—1 in. = 25.4 mm; 1 ft = 0.3 m throughout tables.

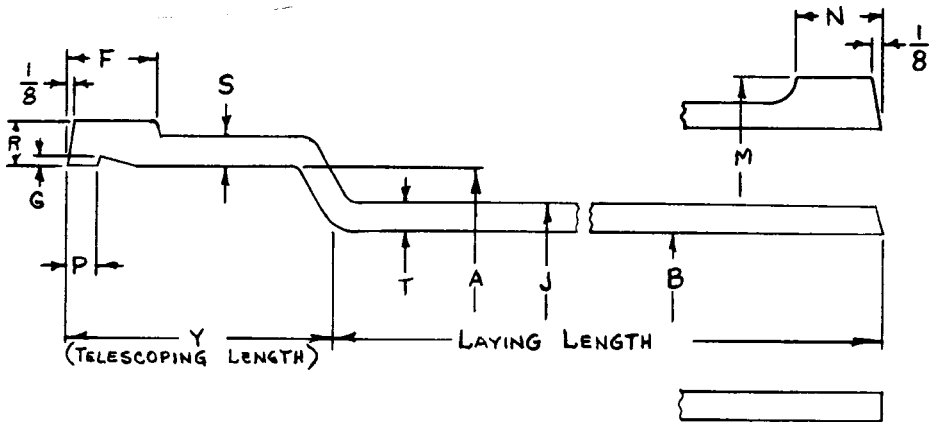

Service Cast Iron Soil Pipe:

Size[A] Availability[B]	Inside Diameter of Hub[B]	Outside Diameter of Barrel[C]	Telescoping Length[C]	Inside Diameter of Barrel[C]	Thickness of Barrel[C]	
					T	
	A	*J*	*Y*	*B*	Nom	Min
2O	2.94 [74.68]	2.30 [58.42]	2.50 [63.5]	1.96 [49.78]	0.17 [4.32]	0.14 [3.56]
3O	3.94 [100.08]	3.30 [83.82]	2.75 [69.85]	2.96 [75.18]	0.17 [4.32]	0.14 [3.56]
4O	4.94 [125.48]	4.30 [109.22]	3.00 [76.2]	3.94 [100.08]	0.18 [4.57]	0.15 [3.81]
5O	5.94 [150.88]	5.30 [134.62]	3.00 [76.2]	4.94 [125.48]	0.18 [4.57]	0.15 [3.81]
6O	6.94 [176.28]	6.30 [160.02]	3.00 [76.2]	5.94 [150.88]	0.18 [4.57]	0.15 [3.81]
8O	9.25 [234.95]	8.38 [212.85]	3.50 [88.9]	7.94 [201.68]	0.23 [5.84]	0.17 [4.32]
10O	11.38 [289.05]	10.50 [266.70]	3.50 [88.9]	9.94 [252.48]	0.28 [6.86]	0.22 [5.59]
12O	13.50 [342.9]	12.50 [317.5]	4.25 [107.95]	11.94 [303.28]	0.28 [6.86]	0.22 [5.59]
15O	16.95 [430.53]	15.88 [403.35]	4.25 [107.95]	15.16 [385.06]	0.36 [9.14]	0.30 [7.62]

Size[A]	Thickness of Hub		Width of Hub Bead[C]	Distance from Lead Groove to End, Pipe and Fittings[B]	Depth of Lead Groove	
	Hub Body	Over Bead				
	S (min)	*R* (min)	*F* (min)	*P*	*G* (min)	*G* (max)
2	0.13 [3.30]	0.34 [8.64]	0.75 (0.63) [19.05] (16.00)	0.22 [5.59]	0.10 [2.54]	0.19 [4.83]
3	0.16 [4.06]	0.37 [9.40]	0.81 (0.63) [20.57] (16.00)	0.22 [5.59]	0.10 [2.54]	0.19 [4.83]
4	0.16 [4.06]	0.37 [9.40]	0.88 (0.63) [22.35] (16.00)	0.22 [5.59]	0.10 [2.54]	0.19 [4.83]
5	0.16 [4.06]	0.37 [9.40]	0.88 (0.63) [22.35] (16.00)	0.22 [5.59]	0.10 [2.54]	0.19 [4.83]
6	0.18 [4.57]	0.37 [9.40]	0.88 (0.63) [22.35] (16.00)	0.22 [5.59]	0.10 [2.54]	0.19 [4.83]
8	0.19 [4.83]	0.44 [11.26]	1.19 (1.06) [30.23] (26.92)	0.38 [9.65]	0.15 [3.81]	0.22 [5.59]
10	0.27 [6.86]	0.53 [13.46]	1.19 (1.06) [30.23] (26.92)	0.38 [9.65]	0.15 [3.81]	0.22 [5.59]
12	0.27 [6.86]	0.53 [13.46]	1.44 (1.31) [36.58] (33.27)	0.47 [11.94]	0.15 [3.81]	0.22 [5.59]
15	0.30 [7.62]	0.58 [14.73]	1.44 (1.31) [36.58] (33.27)	0.47 [11.94]	0.15 [3.81]	0.22 [5.59]

Extra-Heavy Cast Iron Soil Pipe and Fittings:

Size[A] Availability	Inside Diameter of Hub[B]	Outside Diameter of Barrel[B]	Telescoping Length[B]	Inside Diameter of Barrel[B]	Thickness of Barrel[B]	
					T	
	A	*J*	*Y*	*B*	Nom	Min
2*	3.06 [77.72]	2.38 [60.45]	2.50 [63.5]	2.00 [50.8]	0.19 [4.83]	0.16 [4.06]
3*	4.19 [106.43]	3.50 [88.9]	2.75 [69.85]	3.00 [76.2]	0.25 [6.35]	0.22 [5.59]
4*	5.19 [131.83]	4.50 [114.3]	3.00 [76.2]	4.00 [101.6]	0.25 [6.35]	0.22 [5.59]
5*	6.19 [131.83]	5.50 [139.7]	3.00 [76.2]	5.00 [127]	0.25 [6.35]	0.22 [5.59]
6*	7.19 [182.63]	6.50 [165.1]	3.00 [76.2]	6.00 [152.4]	0.25 [6.35]	0.22 [5.59]
8*	9.50 [241.30]	8.62 [218.5]	3.50 [88.9]	8.00 [203.2]	0.31 [7.87]	0.25 [6.35]
10*	11.62 [295.15]	10.75 [273.05]	3.50 [88.9]	10.00 [254]	0.37 [9.40]	0.31 [7.87]
12*	13.75 [349.25]	12.75 [323.85]	4.25 [107.95]	12.00 [304.8]	0.37 [9.40]	0.31 [7.87]
15*	16.95 [430.53]	15.88 [403.35]	4.25 [107.95]	15.00 [381]	0.44 [11.18]	0.38 [9.65]

Copyright ASTM International
Provided by IHS under license with ASTM
No reproduction or networking permitted without license from IHS
Not for Resale

TABLE 1 *Continued*

Size[A]	Thickness of Hub		Width of Hub Bead[B,D]	Distance from Lead Groove to End, Pipe and Fittings[B]	Depth of Lead Groove	
	Hub Body	Over Bead				
	S (min)	*R* (min)	*F*	*P*	*G* (min)	*G* (max)
2	0.18 [4.57]	0.37 [9.40]	0.75 [19.05]	0.22 [5.59]	0.10 [2.54]	0.19 [4.83]
3	0.25 [6.35]	0.43 [10.92]	0.81 [20.57]	0.22 [5.59]	0.10 [2.54]	0.19 [4.83]
4	0.25 [6.35]	0.43 [10.92]	0.88 [22.35]	0.22 [5.59]	0.10 [2.54]	0.19 [4.83]
5	0.25 [6.35]	0.43 [10.92]	0.88 [22.35]	0.22 [5.59]	0.10 [2.54]	0.19 [4.83]
6	0.25 [6.35]	0.43 [10.92]	0.88 [22.35]	0.22 [5.59]	0.10 [2.54]	0.19 [4.83]
8	0.34 [8.64]	0.59 [14.99]	1.19 [30.23]	0.38 [9.65]	0.15 [3.81]	0.22 [5.59]
10	0.40 [10.16]	0.65 [16.51]	1.19 [30.23]	0.38 [9.65]	0.15 [3.81]	0.22 [5.59]
12	0.40 [10.16]	0.65 [16.51]	1.44 [36.54]	0.47 [11.94]	0.15 [3.81]	0.22 [5.59]
15	0.46 [11.68]	0.71 [18.03]	1.44 [36.54]	0.47 [11.94]	0.15 [3.81]	0.22 [5.59]

[A] Nominal inside diameter.
* Indicates this item is made in extra heavy.
[B] For tolerances, see Table 2.
[C] Hub ends and spigot ends shall be permitted to be made with or without draft.
O Indicates this item is made in service weight.
[D] Hub ends and spigot ends can be made with or without draft.

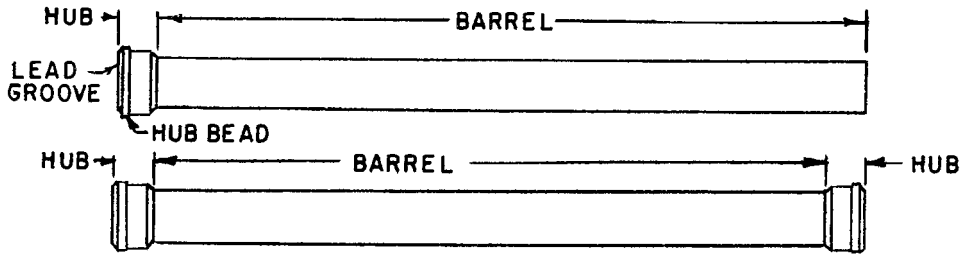

FIG. 1 Single-Hub and Double-Hub Cast Iron Soil Pipe Laying Lengths

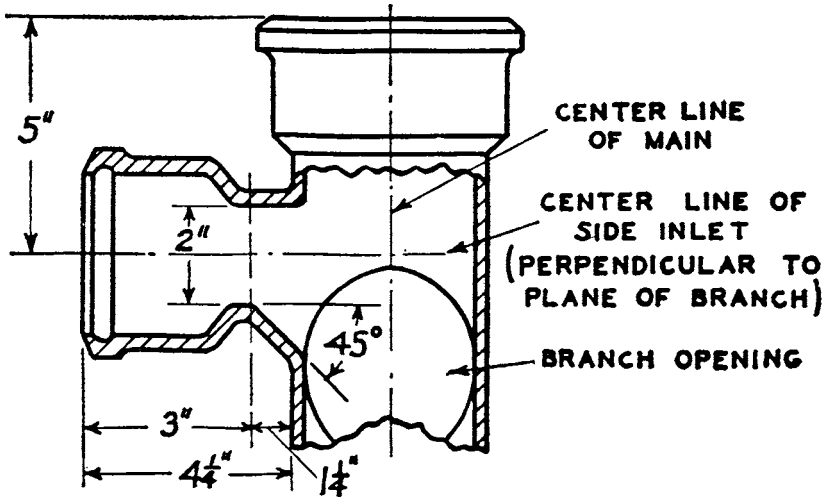

NOTE 1—1 in. = 25.4 mm.

NOTE 2—Dimensions and location of 2-in. side inlet for single or double sanitary **T** branches and **Y** branches are shown above. Single and double sanitary **T** branches and single and double **Y** branches with 2-in. side inlets are standard in the following sizes only: 4 by 3 by 2-in; 4 by 4 by 2-in.; 5 by 4 by 2-in; 6 by 4 by 2-in.

FIG. 2 Dimensions and Locations for 2-in. Side Inlets

Copyright ASTM International
Provided by IHS under license with ASTM
No reproduction or networking permitted without license from IHS
Not for Resale

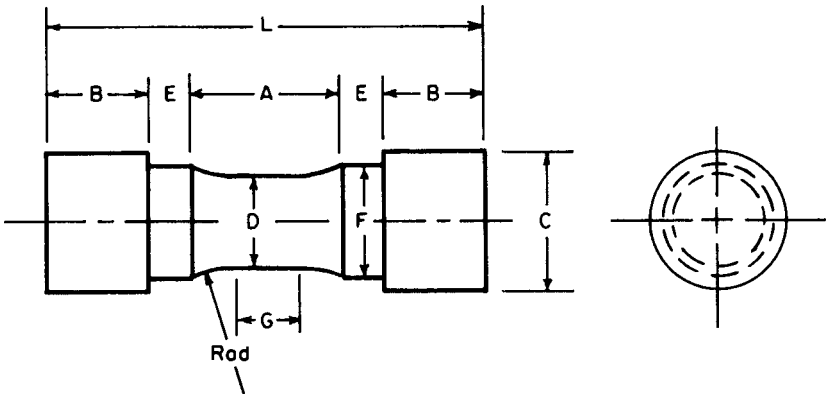

Dimensions, in. [mm]	Tension Test Specimen B
G—Length of parallel, min	0.75 [19]
D—Diameter	0.750 ± 0.015 [19.0 ± 0.38]
R—Radius of fillet, min	1 [25]
A—Length of reduced section, min	1½ [38]
L—Overall length, min	4 [100]
C—Diameter of end section, approx	1¼ [32]
E—Length of shoulder, min	¼ [6]
F—Diameter of shoulder	15/16 ± 1/64 [25 ± 0.4]
B—Length of end section	[A]

	As-Cast Diameter, in. (mm)				Length, in. (mm)
Test Bar	Nominal (Mid-Length)	Minimum (Bottom)	Maximum (Top)	Minimum (Specified)	Maximum (Recommended)
B	1.20 (30.5)	1.14 (29.0)	1.32 (33.5)	6.0 (150)	9.0 (230)

[A] Optional to fit holders on testing machine. If threaded, root diameter shall not be less than dimension *F*.

FIG. 3 Tension-Test Specimens

Copyright ASTM International
Provided by IHS under license with ASTM
No reproduction or networking permitted without license from IHS
Not for Resale

TABLE 2 Dimensional Tolerances for Extra-Heavy and Service Cast Iron Soil Pipe and Fittings, in.

NOTE 1—1 in. = 25.4 mm.

NOTE 2—The tolerances set forth in Table 2 are intended for pipe and fittings designed for use with lead and oakum joints; however, these same tolerances shall apply to pipe and fittings designed for use with a compression type gasket joint.

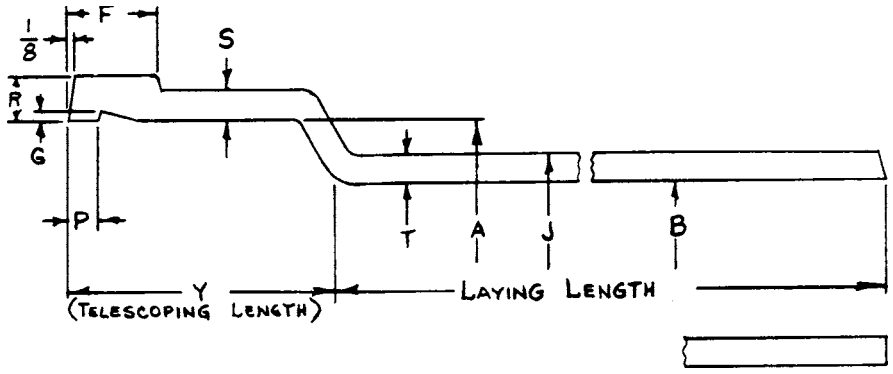

Size[A]	Inside Diameter of Hub	Outside Diameter of Barrel	Inside Diameter of Barrel	Tele-scoping Length	Laying Length			
							Fittings	
	A'	*J*	*B*	*Y*	Pipe, 2½ , 3½ , 5-ft Lengths	Pipe, 10-ft Lengths	Regular	Extra Long[B]
2	±0.06 [1.52]	±0.09 [±2.29]	±0.09 [±2.29]	±0.06 [±1.52]	±¼ [±6.35]	±½ [±12.7]	±⅛ [±3.18]	±1/16 [±1.59]
3	±0.09 [2.29] −0.06 [1.52]	±0.09 [±2.29]	±0.09 [±2.29]	±0.06 [±1.52]	±¼ [±6.35]	±½ [±12.7]	±⅛ [±3.18]	±1/16 [±1.59]
4	+0.09 [2.29] −0.06 [1.52]	±0.09 [±2.29]	±0.09 [±2.29]	±0.06 [±1.52]	±¼ [±6.35]	±½ [±12.7]	±⅛ [±3.18]	±1/16 [±1.59]
5	+0.09 [2.29] −0.06 [1.52]	±0.09 [±2.29]	±0.09 [±2.29]	±0.06 [±1.52]	±5/16 [±7.94]	±⅝ [±15.88]	±3/16 [±4.76]	±3/32 [±2.38]
6	+0.09 [2.29] −0.06 [1.52]	±0.09 [±2.29]	±0.09 [±2.29]	±0.06 [±1.52]	±5/16 [±7.94]	±⅝ [±15.88]	±3/16 [±4.76]	±3/32 [±2.38]
8	±0.13 [3.30]	±0.13 [±3.30]	±0.13 [±3.30]	±0.13 [±3.30]	±5/16 [±7.94]	±⅝ [±15.88]	±3/16 [±4.76]	±3/32 [±2.38]
10	±0.13 [3.30]	±0.13 [±3.30]	±0.13 [±3.30]	±0.13 [±3.30]	±⅜ [±9.53]	±¾ [±19.05]	±¼ [±6.35]	±⅛ [±3.18]
12	±0.13 [3.30]	±0.19 [±4.83]	±0.19 [±4.83]	±0.19 [±4.83]	±⅜ [±9.53]	±¾ [±19.05]	±¼ [±6.35]	±⅛ [±3.18]
15	±0.13 [3.30]	±0.19 [±4.83]	±0.19 [±4.83]	±0.19 [±4.83]	±⅜ [±9.53]	±¾ [±19.05]	±¼ [±6.35]	±⅛ [±3.18]

Size	Distance from Lead Groove to End, Pipe and Fittings
	P
2	±0.09 [±1.52]
3	±0.09 [±1.52]
4	±0.09 [±1.52]
5	±0.09 [±1.52]
6	±0.09 [±1.52]
8	±0.09 [±1.52]
10	±0.09 [±1.52]
12	±0.11 [±2.79]
15	±0.11 [±2.79]

[A] Nominal inside diameter.

[B] These tolerances apply to each foot of extra-long fittings in excess of regular laying lengths specified in this specification.

Copyright ASTM International
Provided by IHS under license with ASTM
No reproduction or networking permitted without license from IHS
Not for Resale

TABLE 3 Dimensions of One-Quarter Bends

NOTE 1—1 in. = 25.4 mm.
NOTE 2—Dimensions *D* and *X* are laying lengths.

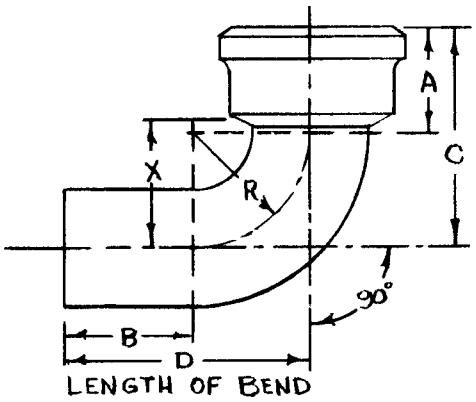

Size, in., Availability[A]	Dimensions in in.[B]					
	A	*B*	*C*	*D*	*R*	*X*
2*O	2¾ [70]	3 [76]	5¾ [146]	6 [152]	3 [76]	3¼ [83]
3*O	3¼ [83]	3½ [89]	6¾ [171]	7 [178]	3½ [89]	4 [102]
4*O	3½ [89]	4 [102]	7½ [191]	8 [203]	4 [102]	4½ [114]
5*O	3½ [89]	4 [102]	8 [203]	8½ [216]	4½ [114]	5 [127]
6*O	3½ [89]	4 [102]	8½ [216]	9 [229]	5 [127]	5½ [140]
8*O	4⅛ [105]	5½ [140]	10⅛ [257]	11½ [292]	6 [152]	6⅝ [168]
10*O	4⅛ [105]	5½ [140]	11⅛ [283]	12½ [318]	7 [178]	7⅝ [194]
12*O	5 [127]	7 [178]	13 [330]	15 [381]	8 [203]	8¾ [222]
15*O	5 [127]	7 [178]	14½ [368]	16½ [419]	9½ [241]	10¼ [260]

[A] * indicates this item is made in extra heavy.
O indicates this item is made in service weight.
[B] For details of hubs and spigots, see Table 1.

Copyright ASTM International
Provided by IHS under license with ASTM
No reproduction or networking permitted without license from IHS
Not for Resale

TABLE 4 Dimensions of Long One-Quarter Bends

NOTE 1—1 in. = 25.4 mm.
NOTE 2—Dimensions *D* and *X* are laying lengths.

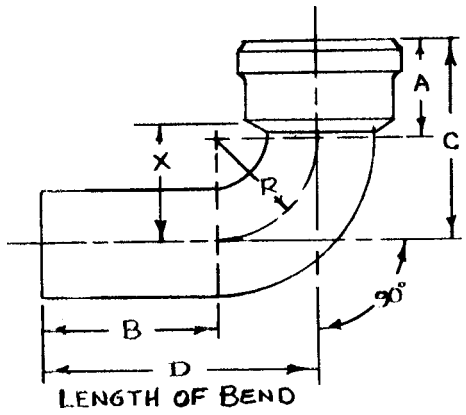

Size, in., Availability[A]	Dimensions in in.[B]					
	A	*B*	*C*	*D*	*R*	*X*
2 by 12*O	2¾ [76]	9 [229]	5¾ [146]	12 [305]	3 [76]	3¼ [83]
2 by 18*O	2¾ [76]	15 [381]	5¾ [146]	18 [457]	3 [76]	3¼ [83]
2 by 24*O	2¾ [76]	21 [533]	5¾ [146]	24 [610]	3 [76]	3¼ [83]
3 by 12*O	3¼ [83]	8½ [216]	6¾ [171]	12 [305]	3½ [89]	4 [102]
3 by 18*O	3¼ [83]	14½ [368]	6¾ [171]	18 [457]	3½ [89]	4 [102]
3 by 24*O	3¼ [83]	20½ [521]	6¾ [171]	24 [610]	3½ [89]	4 [102]
4 by 12*O	3½ [89]	8 [203]	7½ [191]	12 [305]	4 [102]	4½ [114]
4 by 18*O	3½ [89]	14 [356]	7½ [191]	18 [457]	4 [102]	4½ [114]
4 by 24*O	3½ [89]	20 [508]	7½ [191]	24 [610]	4 [102]	4½ [114]

[A] * indicates this item is made in extra heavy.
O indicates this item is made in service weight.
[B] For details of hubs and spigots, see Table 1.

TABLE 5 Dimensions of Long Low-Hub One-Quarter Bends

NOTE 1—1 in. = 25.4 mm.
NOTE 2—Dimensions *D* and *X* are laying lengths.

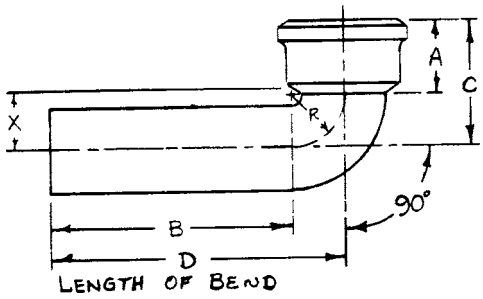

Size, in., Availability[A]	Dimensions in in.[B]					
	A	*B*	*C*	*D*	*R*	*X*
4 by 12O	3 [76]	9¼ [235]	5¾ [146]	12 [305]	2¾ [70]	2¾ [70]
4 by 14O	3 [76]	11¼ [286]	5¾ [146]	14 [356]	2¾ [70]	2¾ [70]
4 by 16O	3 [76]	13¼ [337]	5¾ [146]	16 [406]	2¾ [70]	2¾ [70]
4 by 18O	3 [76]	15¼ [387]	5¾ [146]	18 [457]	2¾ [70]	2¾ [70]

[A] O indicates this item is made in service weight.
[B] For details of hubs and spigots, see Table 1.

Copyright ASTM International
Provided by IHS under license with ASTM
No reproduction or networking permitted without license from IHS
Not for Resale

TABLE 6 Dimensions of One-Quarter Bends with Low Heel Inlet

NOTE 1—1 in. = 25.4 mm.
NOTE 2—Dimensions *D*, *X*, and *X′* are laying lengths

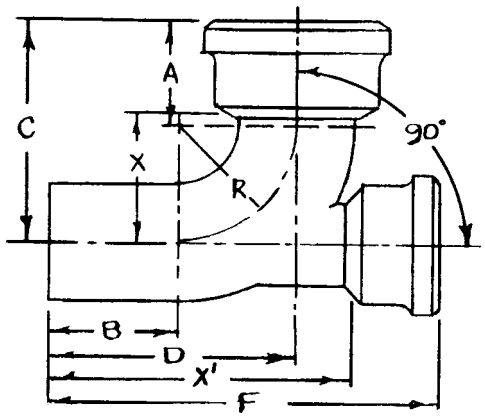

Size, in., Availability[A]	Dimensions in in.[B]							
	A	*B*	*C*	*D*	*F*	*R*	*X*	*X′*
3 by 2O	3¼ [83]	3½ [89]	6¾ [172]	7 [178]	11½ [292]	3½ [89]	4 [102]	9 [229]
4 by 2O	3½ [89]	4 [102]	7½ [191]	8 [203]	13 [330]	4 [102]	4½ [114]	10½ [267]

[A] O indicates this item is made in service weight.
[B] For details of hubs and spigots, see Table 1.

TABLE 7 Dimensions of Quarter Bends with High Heel Inlet

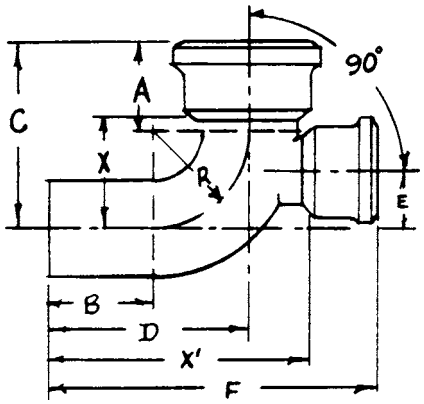

Size, in., Availability[A]	Dimensions in in.[B]								
	A	*B*	*C*	*D*	*E*	*F*	*R*	*X*	*X′*
4 by 2*O	3½ [89]	4 [102]	7½ [191]	8 [203]	2¾ [70]	13 [330]	4 [102]	4½ [114]	10½ [267]

[A] * indicates this item is made in extra heavy.
O indicates this item is made in service weight.
[B] For details of hubs and spigots, see Table 1.

Copyright ASTM International
Provided by IHS under license with ASTM
No reproduction or networking permitted without license from IHS
Not for Resale

TABLE 8 Dimensions of Short and Long Sweep Bends

NOTE 1—1 in. = 25.4 mm.
NOTE 2—Dimensions *D* and *X* are laying lengths.

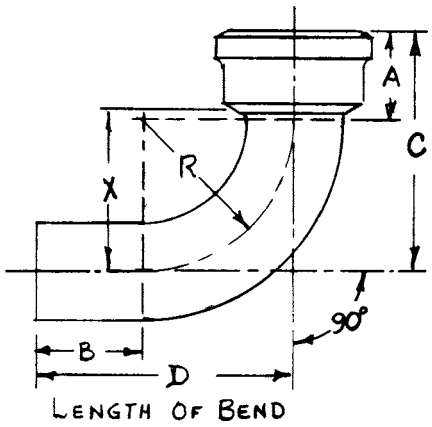

Short Sweep Bends:

Size, in.	Dimensions in in.[A]					
	A	*B*	*C*	*D*	*R*	*X*
2*O	2¾ [70]	3 [76]	7¾ [197]	8 [203]	5 [127]	5¼ [133]
3*O	3¼ [83]	3½ [89]	8¾ [222]	9 [229]	5½ [140]	6 [152]
4*O	3½ [89]	4 [102]	9½ [241]	10 [254]	6 [152]	6½ [165]
5*O	3½ [89]	4 [102]	10 [254]	10½ [267]	6½ [165]	7 [178]
6*O	3½ [89]	4 [102]	10½ [267]	11 [279]	7 [178]	7½ [191]
8*O	4⅛ [105]	5½ [140]	12⅛ [308]	13½ [343]	8 [203]	8⅝ [219]
10*O	4⅛ [105]	5½ [140]	13⅛ [333]	14½ [368]	9 [229]	9⅝ [244]
12*O	5 [127]	7 [178]	15 [381]	17 [432]	10 [254]	10¾ [273]
15*O	5 [127]	7 [178]	16½ [419]	18½ [470]	11½ [292]	12¼ [311]

[A] For details of hubs and spigots, see Table 1.

Long Sweep Bends:

Size, in., Availability[A]	Dimensions in in.[B]					
	A	*B*	*C*	*D*	*R*	*X*
2*O	2¾ [70]	3 [76]	10¾ [273]	11 [279]	8 [203]	8¼ [210]
3*O	3¼ [83]	3½ [89]	11¾ [298]	12 [305]	8½ [216]	9 [229]
4*O	3½ [89]	4 [102]	12½ [318]	13 [330]	9 [229]	9½ [241]
5*O	3½ [89]	4 [102]	13 [330]	13½ [343]	9½ [241]	10 [254]
6*O	3½ [89]	4 [102]	13½ [343]	14 [356]	10 [254]	10½ [267]
8*O	4⅛ [105]	5½ [140]	15⅛ [384]	16½ [419]	11 [279]	11⅝ [295]
10*O	4⅛ [105]	5½ [140]	16⅛ [410]	17½ [445]	12 [305]	12⅝ [321]
12*O	5 [127]	7 [178]	18 [457]	20 [508]	13 [330]	13¾ [349]
15*O	5 [127]	7 [178]	19½ [495]	21½ [546]	14½ [368]	15¼ [387]

[A] * indicates this item is made in extra heavy.
O indicates this item is made in service weight.
[B] For details of hubs and spigots, see Table 1.

Copyright ASTM International
Provided by IHS under license with ASTM
No reproduction or networking permitted without license from IHS
Not for Resale

TABLE 9 Dimensions of Reducing Long Sweep Bends

NOTE 1—1 in. = 25.4 mm.
NOTE 2—Dimensions *D* and *X* are laying lengths.

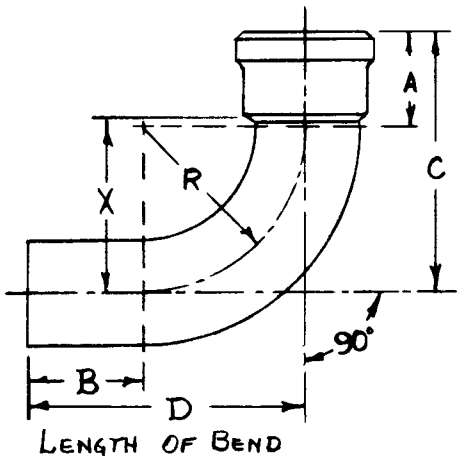

Size, in., Availability[A]	Dimensions in in.[B]					
	A	*B*	*C*	*D*	*R*	*X*
3 by 2*O	3 [76]	3½ [89]	11½ [292]	12 [305]	8½ [216]	9 [229]
4 by 3*O	3¼ [83]	4 [102]	12¼ [311]	13 [330]	9 [229]	9½ [241]

[A] * indicates this item is made in extra heavy.
O indicates this item is made in service weight.
[B] For details of hubs and spigots, see Table 1.

Copyright ASTM International
Provided by IHS under license with ASTM
No reproduction or networking permitted without license from IHS
Not for Resale

TABLE 10 Dimensions of One-Fifth and One-Sixth Bends

NOTE 1—1 in. = 25.4 mm.
NOTE 2—Dimensions *D* and *X* are laying lengths.

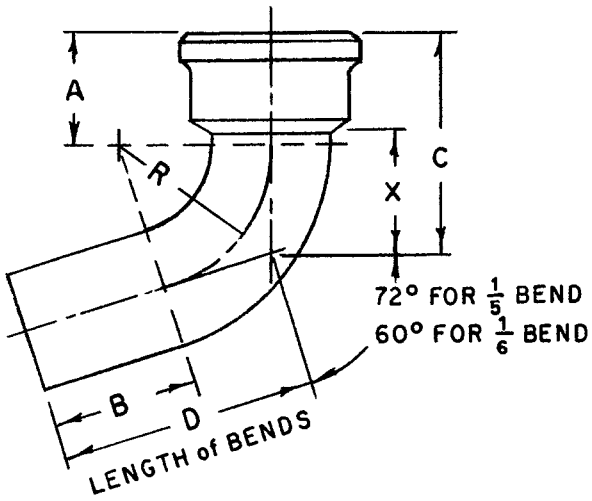

One-Fifth Bends:

Size, in. Availability[A]	Dimensions in in.[B]					
	A	*B*	*C*	*D*	*R*	*X*
3O	3¼ [83]	3½ [89]	5 13⁄16 [148]	6 1⁄16 [154]	3½ [89]	3 1⁄16 [78]
4O	3 ⅓ [85]	4 [102]	6 7⁄16 [164]	6 15⁄16 [176]	4 [102]	3 7⁄16 [87]

[A] O indicates this item is made in service weight.
[B] For details of hubs and spigots, see Table 1.

One Sixth Bends:

Size, in., Availability[A]	Dimensions in in.[B]					
	A	*B*	*C*	*D*	*R*	*X*
2*O	2¾ [70]	3 [76]	4½ [114]	4¾ [121]	3 [76]	2 [51]
3*O	3¼ [83]	3½ [89]	5¼ [133]	5½ [140]	3½ [89]	2½ [64]
4*O	3½ [89]	4 [102]	5 13⁄16 [147]	6 5⁄16 [160]	4 [102]	2 13⁄16 [71]
5*O	3½ [89]	4 [102]	6⅛ [156]	6⅝ [168]	4½ [114]	3⅛ [79]
6*O	3½ [89]	4 [102]	6⅜ [161]	6⅞ [175]	5 [127]	3⅜ [86]
8*O	4⅛ [105]	5½ [140]	7⅝ [194]	9 [229]	6 [152]	4⅛ [105]
10*O	4⅛ [105]	5½ [140]	8 3⁄16 [208]	9 9⁄16 [243]	7 [179]	4 11⁄16 [119]

[A] For details of hubs and spigots, see Table 1.
[B] * indicates this item is made in extra heavy.
O indicates this item is made in service weight.

Copyright ASTM International
Provided by IHS under license with ASTM
No reproduction or networking permitted without license from IHS
Not for Resale

TABLE 11 Dimensions of One-Eighth, Long One-Eighth Bends, and One-Sixteenth Bends

NOTE 1—1 in. = 25.4 mm.
NOTE 2—Dimensions *D* and *X* are laying lengths.

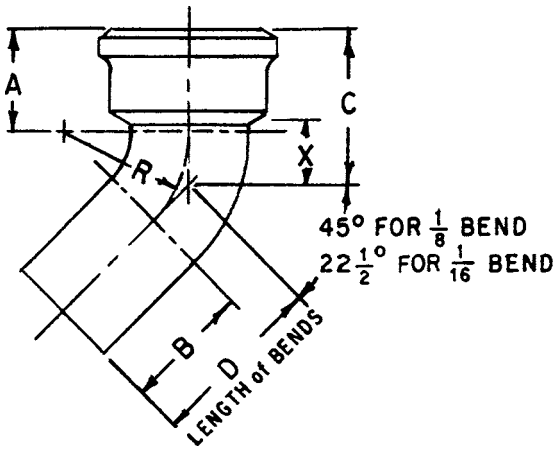

Size, In., Availability[A]	Dimensions in in.[B]					
	A	*B*	*C*	*D*	*R*	*X*
One-Eighth Bends						
2*O	2¾ [70]	3 [76]	4 [102]	4¼ [108]	3 [76]	1½ [38]
3*O	3¼ [83]	3½ [89]	4 1/16 [103]	4 15/16 [125]	3½ [89]	1 15/16 [49]
4*O	3½ [89]	4 [102]	5 3/16 [132]	5 11/16 [145]	4 [102]	2 3/16 [56]
5*O	3½ [89]	4 [102]	5⅜ [137]	5⅞ [149]	4½ [114]	2⅜ [60]
6*O	3½ [89]	4 [102]	5 9/16 [142]	6 1/16 [154]	5 [127]	2 9/16 [65]
8*O	4⅛ [105]	5½ [140]	6⅝ [168]	8 [203]	6 [152]	3⅛ [79]
10*O	4½ [114]	5½ [140]	7 [178]	8⅜ [213]	7 [178]	3½ [89]
12*O	5 [127]	7 [178]	8 5/16 [211]	10 5/16 [262]	8 [203]	4 1/16 [103]
15*O	5 [127]	7 [178]	8 15/16 [227]	10 15/16 [278]	9½ [241]	4 11/16 [119]
Long One-Eighth Bends						
2 by 12*O	2¾ [70]	10¾ [273]	4 [102]	12 [305]	3 [76]	1½ [38]
2 by 18*O	2¾ [70]	16¾ [425]	4 [102]	18 [457]	3 [76]	1½ [38]
2 by 24*O	2¾ [70]	22¾ [578]	4 [102]	24 [610]	3 [76]	1½ [38]
3 by 12*O	3¼ [83]	10 9/16 [269]	4 11/16 [119]	12 [305]	3½ [89]	1 15/16 [49]
3 by 18*O	3¼ [83]	16 9/16 [421]	4 11/16 [119]	18 [457]	3½ [89]	1 15/16 [49]
3 by 24*O	3¼ [83]	22 9/16 [573]	4 11/16 [119]	24 [610]	3½ [89]	1 15/16 [49]
4 by 12*O	3½ [89]	10 5/16 [261]	5 3/16 [12]	12 [305]	4 [102]	2 3/16 [56]
4 by 18*O	3½ [89]	16 5/16 [414]	5 3/16 [132]	18 [457]	4 [102]	2 3/16 [56]
4 by 24*O	3½ [89]	22 5/16 [567]	5 3/16 [132]	24 [610]	4 [102]	2 3/16 [56]
One-Sixteenth Bends						
2*O	2¾ [70]	3 [76]	3⅜ [86]	3⅝ [92]	3 [76]	⅞ [22]
3*O	3¼ [83]	3½ [89]	3 15/16 [100]	4 3/16 [107]	3½ [89]	1 3/16 [30]
4*O	3½ [90]	4 [102]	4 5/16 [109]	4 13/16 [122]	4 [102]	1 5/16 [33]
5*O	3½ [90]	4 [102]	4⅜ [111]	4⅞ [124]	4½ [114]	1⅜ [35]
6*O	3½ [90]	4 [102]	4½ [114]	5 [127]	5 [127]	1½ [38]
8*O	4⅛ [105]	5½ [140]	5 5/16 [135]	6 11/16 [170]	6 [152]	1 13/16 [46]
10*O	4⅛ [105]	5½ [140]	5½ [140]	6⅞ [175]	7 [178]	2 [51]
12*O	5 [127]	7 [178]	6⅝ [168]	8⅝ [219]	8 [203]	2⅜ [60]
15*O	5 [127]	7 [178]	6⅞ [175]	8⅞ [225]	9½ [241]	2⅝ [67]

[A] For details of hubs and spigots, see Table 1.
[B] * indicates this item is made in extra heavy.
O indicates this item is made in service weight.

Copyright ASTM International
Provided by IHS under license with ASTM
No reproduction or networking permitted without license from IHS
Not for Resale

TABLE 12 Dimensions of Y Branches, Single

NOTE 1—1 in. = 25.4 mm.
NOTE 2—Dimensions X^1 and X are laying lengths.

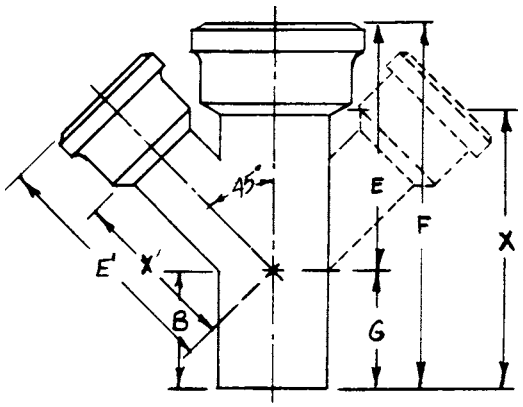

Size, in., Availability [A]	Single Dimensions in in. [B]						
	B (min)	*E*	*E'*	*F*	*G*	*X*	*X'*
2*O	3½ [88]	6½ [165]	6½ [165]	10½ [267]	4 [102]	8 [203]	4 [102]
3*O	4 [102]	8¼ [210]	8¼ [210]	13¼ [337]	5 [127]	10½ [267]	5½ [140]
4*O	4 [102]	9¾ [248]	9¾ [248]	15 [381]	5¼ [133]	12 [305] [305]	6¾ [171]
5*O	4 [102]	11 [279]	11 [279]	16½ [409]	5½ [140]	13½ [343]	8 [203]
6*O	4 [102]	12¼ [311]	12¼ [311]	18 [457]	5¾ 16]	15 [381]	9¼ [235]
8*O	5½ [140]	15⁵⁄₁₆ [389]	15⁵⁄₁₆ [389]	23 [584]	7¹¹⁄₁₆ [195]	19½ [495]	11¹³⁄₁₆ [300]
10*O	5½ [10]	18 [457]	18 [457]	26 [660]	8 [203]	22½ [572]	14½ [368]
12*O	7 [178]	21⅛ [537]	21⅛ [537]	31¼ [794]	10⅛ [257]	27 [686]	16⅞ [429]
15*O	7 [178]	25 [635]	25 [635]	35¾ [908]	10¾ [273]	31½ [800]	20¾ [527]
3 by 2*O	4 [102]	7⁹⁄₁₆ [192]	7½ [191]	11¾ [298]	4³⁄₁₆ [106]	9 [229]	5 [127]
4 by 2*O	4 [102]	8⅜ [213]	8¼ [210]	12 [305]	3⅝ [92]	9 [229]	5¾ [146]
4 by 3*O	4 [102]	9¹⁄₁₆ [230]	9 [229]	13½ [343]	4⁷⁄₁₆ [113]	10½ [267]	6¼ [159]
5 by 2*O	4 [102]	8⅞ [255]	9 [229]	12 [305]	3⅛ [79]	9 [229]	6½ [165]
5 by 3*O	4 [102]	9⅝ [244]	9¾ [248]	13½ [343]	3⅞ [98]	10½ [267]	7 [178]
5 by 4*O	4 [102]	10⁵⁄₁₆ [262]	10½ [267]	15 [381]	4¹¹⁄₁₆ [119]	12 [305]	7½ [191]
6 by 2*O	4 [102]	9⁷⁄₁₆ [240]	9¾ [248]	12 [305]	2⁹⁄₁₆ [65]	9 [229]	7¼ [184]
6 by 3*O	4 [102]	10⅛ [257]	10½ [267]	13½ [343]	3⅜ [86]	10½ [267]	7¾ [197]
6 by 4*O	4 [102]	10¹³⁄₁₆ [275]	11¼ [286]	15 [381]	4³⁄₁₆ [106]	12 [305]	8¼ [210]
6 by 5*O	4 [102]	11⁹⁄₁₆ [294]	11¾ [298]	16½ [419]	4¹⁵⁄₁₆ [125]	13½ [343]	8¾ [222]
8 by 2*O	5½ [140]	10⅞ [276]	11 [279]	14 [356]	3⅛ [79]	10½ [267]	8½ [216]
8 by 3*O	5½ [140]	11⁹⁄₁₆ [294]	11¾ [298]	15½ [394]	3¹⁵⁄₁₆ [100]	12 [305]	9 [229]
8 by 4*O	5½ [140]	12¼ [311]	12½ [318]	17 [432]	4¾ [121]	13½ [343]	9½ [241]
8 by 5*O	5½ [140]	13 [330]	13 [330]	18½ [470]	5½ [140]	15 [381]	10 [254]
8 by 6*O	5½ [140]	13¹¹⁄₁₆ [348]	13½ [343]	20 [508]	6⁵⁄₁₆ [160]	16½ [419]	10½ [267]
10 by 3*O	5½ [140]	12¾ [324]	13½ [343]	15½ [394]	2¾ [70]	12 [305]	10¾ [273]
10 by 4*O	5½ [140]	13⁷⁄₁₆ [341]	14⅛ [359]	17 [432]	3⁹⁄₁₆ [90]	13½ [343]	11⅛ [283]
10 by 5*O	5½ [140]	14³⁄₁₆ [360]	14⅝ [371]	18½ [470]	4⁵⁄₁₆ [110]	15 [381]	11⅝ [296]
10 by 6*O	5½ [140]	14⅞ [378]	15⅛ [384]	20 [508]	5⅛ [130]	16½ [419]	12⅛ [308]
10 by 8*O	5½ [140]	16½ [419]	16¹⁵⁄₁₆ [430]	23 [584]	6½ [165]	19½ [495]	13⁷⁄₁₆ [341]
12 by 4*O	7 [178]	15⅛ [384]	15⁷⁄₁₆ [392]	19¼ [489]	4⅛ [105]	15 [381]	12⁷⁄₁₆ [316]
12 by 5*O	7 [178]	15⅞ [430]	15¹⁵⁄₁₆ [405]	20¾ [527]	4⅞ [124]	16½ [419]	12¹⁵⁄₁₆ [329]
12 by 6*O	7 [178]	16⁹⁄₁₆ [421]	16⁷⁄₁₆ [418]	22¼ [565]	5¹¹⁄₁₆ [144]	18 [457]	13⁷⁄₁₆ [341]
12 by 8*O	7 [178]	18³⁄₁₆ [462]	18¼ [464]	25¼ [641]	7¹⁄₁₆ [179]	21 [533]	14¾ [375]
12 by 10*O	7 [178]	19¹¹⁄₁₆ [500]	19⁵⁄₁₆ [491]	28¼ [718]	8⁹⁄₁₆ [217]	24 [610]	15¹³⁄₁₆ [402]
15 by 4*O	7¼ [184]	17 [432]	18 [457]	19½ [495]	2½ [64]	15¼ [387]	15 [381]
15 by 6*O	7 [178]	18¼ [464]	18¾ [476]	22¼ [565]	4 [102]	18 [457]	15¾ [400]
15 by 8*O	7 [178]	19⅞ [505]	20⁹⁄₁₆ [522]	25¼ [641]	5⅜ [137]	21 [533]	17¹⁄₁₆ [433]
15 by 10*O	7 [178]	21⅜ [543]	21⅝ [549]	28¼ [718]	6⅞ [175]	24 [610]	18⅛ [460]
15 by 12*O	7 [178]	22¹³⁄₁₆ [579]	23⁷⁄₁₆ [595]	31¼ [794]	8⁷⁄₁₆ [214]	27 [686]	19³⁄₁₆ [487]

[A] * indicates this item is made in extra heavy.
O indicates this item is made in service weight.
[B] For details of hubs and spigots, see Table 1. For details of side inlets see Fig. 2.

Copyright ASTM International
Provided by IHS under license with ASTM
No reproduction or networking permitted without license from IHS
Not for Resale

TABLE 13 Dimensions of Y Branches, Double

NOTE 1—1 in. = 25.4 mm.
NOTE 2—X and X^1 are laying lengths.

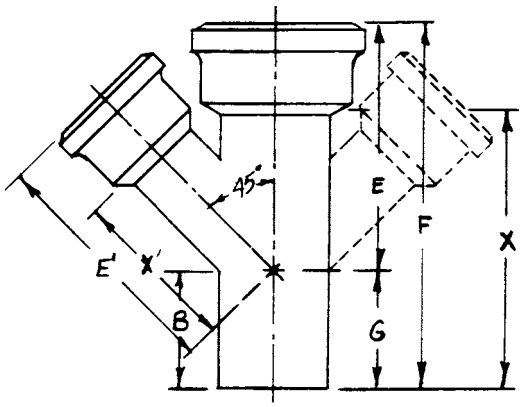

Size, in., Availability [A]	Double Dimensions in in. [B]						
	B (min)	*E*	*E′*	*F*	*G*	*X*	*X′*
2*O	3½ [89]	6½ [165]	6½ [165]	10½ [267]	4 [102]	8 [203]	4 [102]
3*O	4 [102]	8¼ [210]	8¼ [210]	13¼ [337]	5 [127]	10½ [267]	5½ [140]
4*O	4 [102]	9¾ [248]	9¾ [248]	15 [381]	5¼ [133]	12 [305]	9¼ [235]
5*O	4 [102]	11 [279]	11 [279]	16½ [419]	5½ [140]	13½ [343]	8 [203]
6*O	4 [102]	12¼ [311]	12¼ [311]	18 [457]	5¾ [146]	15 [381]	9¼ [235]
8*O	5½ [140]	15^{5}⁄$_{16}$ [389]	15^{5}⁄$_{16}$ [389]	23 [584]	7^{11}⁄$_{16}$ [195]	19½ [495]	11^{13}⁄$_{16}$ [300]
10*O	5½ [140]	18 [457]	18 [457]	26 [660]	8 [203]	22½ [572]	14½ 368]
12*O	7 [178]	21⅛ [537]	21⅛ [537]	31¼ [794]	10⅛ [257]	27 [686]	16⅞ [429]
15*O	7 [178]	25 [635]	25 [635]	35¾ [908]	10¾ [273]	31½ [800]	20¾ [527]
3 by 2*O	4 [102]	7^{9}⁄$_{16}$ [192]	7½ [191]	11¾ [298]	4^{3}⁄$_{16}$ [106]	9 [229]	5 [127]
4 by 2*O	4 [102]	8⅜ [213]	8¼ [210]	12 [305]	3⅜ [86]	9 [229]	5¾ [146]
4 by 3*O	4 [102]	9^{1}⁄$_{16}$ [230]	9 [229]	13½ [343]	4^{7}⁄$_{16}$ [113]	10½ [267]	6¼ [159]
6 by 3*O	4 [102]	10⅛ [257]	10½ [267]	13½ [343]	3⅜ [86]	10½ [267]	7 [178]
6 by 4*O	4 [102]	10^{13}⁄$_{16}$ [275]	11¼ [286]	15 [381]	4^{3}⁄$_{16}$ [106]	12 [305]	8¼ [210]
8 by 4*O	5½ [140]	12¼ [311]	12½ [318]	17 [432]	4¾ [121]	13½ [343]	9½ [241]
8 by 6*O	5½ [140]	13^{11}⁄$_{16}$ [348]	13½ [343]	20 [208]	6^{5}⁄$_{16}$ [160]	16½ [419]	10½ [267]
10 by 6*O	5½ [140]	14⅞ [378]	15⅛ [384]	20 [508]	5⅛ [130]	16½ [419]	12⅛ [308]
10 by 8*O	5½ [140]	16½ [419]	16^{15}⁄$_{16}$ [430]	23 [584]	6½ [165]	19½ [495]	13^{7}⁄$_{16}$ [341]
12 by 6*	7 [178]	16^{9}⁄$_{16}$ [421]	16^{7}⁄$_{16}$ [418]	22¼ [565]	5^{11}⁄$_{16}$ [144]	18 [457]	13^{7}⁄$_{16}$ [341]
12 by 8*O	7 [178]	18^{3}⁄$_{16}$ [462]	18¼ [464]	25¼ [641]	7^{1}⁄$_{16}$ [179]	21 [533]	14¾ [375]

[A] * indicates this item is made in extra heavy.
O indicates this item is made in service weight.
[B] For details of hubs and spigots, see Table 1. For details of side inlets see Fig. 2.

Copyright ASTM International
Provided by IHS under license with ASTM
No reproduction or networking permitted without license from IHS
Not for Resale

TABLE 14 Dimensions of Combination Y and One-Eighth Bend, Single and Double

NOTE 1—1 in. = 25.4 mm.
NOTE 2—Dimensions *X* and *X'* are laying lengths.

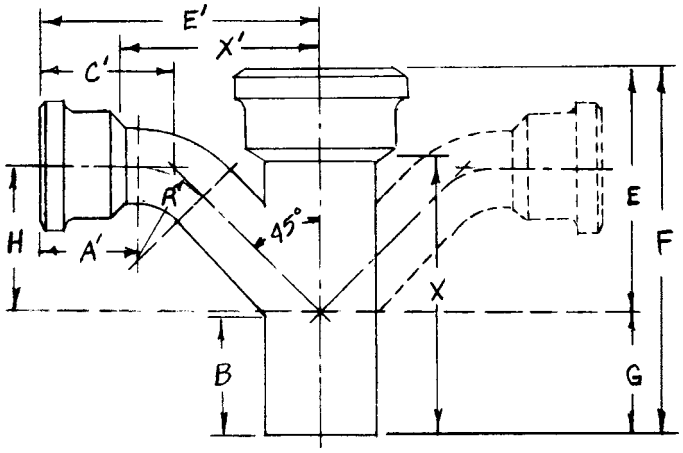

Size, in., Availability[A]	Dimensions in in.[B]										
	A'	*B* (min)	*C'*	*E*	*E'*	*F*	*G*	*H*	*R'*	*X*	*X'*
Single:											
2*O	2¾ [70]	3½ [89]	4 [102]	6½ [165]	7⅜ [187]	10½ [267]	4 [102]	3⅜ [86]	3 [76]	8 [203]	4⅞ [124]
3*O	3¼ [83]	4 [102]	4 11/16 [119]	8¼ [210]	9¾ [248]	13¼ [337]	5 [127]	5 1/16 [129]	3½ [89]	10½ [267]	7 [178]
4*O	3½ [89]	4 [102]	5 3/16 [132]	9¾ [248]	12 [305]	15 [381]	5¼ [133]	6 13/16 [173]	4 [102]	12 [305]	9 [229]
5*O	3½ [89]	4 [102]	5⅜ [137]	11 [279]	14 [356]	16½ [419]	5½ [140]	8⅝ [219]	4½ [114]	13½ [343]	11 [279]
6*O	3½ [89]	4 [102]	5 9/16 [141]	12¼ [311]	15⅞ [403]	18 [457]	5¾ [146]	10 5/16 [262]	5 [127]	15 [381]	12⅞ [327]
8*O	4⅛ [105]	5½ [140]	6⅝ [168]	15 5/16 [389]	20½ [521]	23 [584]	7 11/16 [195]	13⅞ [352]	6 [152]	19½ [495]	17 [432]
3 by 2*O	3 [76]	4 [102]	4¼ [108]	7 9/16 [192]	8¼ [209]	11¾ [299]	4 3/16 [106]	4 [102]	3 [76]	9 [229]	5¾ [146]
4 by 2*O	3 [76]	4 [102]	4¼ [108]	8 5/16 [211]	8¾ [222]	12 [305]	3 11/16 [94]	4½ [114]	3 [76]	9 [229]	6¼ [159]
4 by 3*O	3¼ [83]	4 [102]	4 11/16 [119]	9 [229]	10¼ [260]	13½ [343]	4½ [114]	5 9/16 [141]	3½ [89]	10½ [267]	7½ [191]
5 by 2*O	3 [76]	4 [102]	4¼ [108]	8⅝ [219]	9¼ [235]	12 [305]	3⅜ [86]	5 [127]	3 [76]	9 [229]	6¾ [171]
5 by 3*O	3¼ [83]	4 [102]	4 11/16 [119]	9½ [241]	10¾ [273]	13½ [343]	4 [102]	6 1/16 [154]	3½ [89]	10½ [267]	8 [203]
5 by 4*O	3½ [89]	4 [102]	5 3/16 [132]	10¼ [260]	12½ [318]	15 [381]	4¼ [108]	7 5/16 [185]	4 [102]	12 [305]	9½ [241]
6 by 2*O	3 [76]	4 [102]	4¼ [108]	9 5/16 [237]	9¾ [248]	12 [305]	2 11/16 [68]	5½ [140]	3 [76]	9 [229]	7¼ [184]
6 by 3*O	3¼ [83]	4 [102]	4 11/16 [119]	10 [257]	11¼ [286]	13½ [343]	3⅛ [79]	6 9/16 [167]	3½ [89]	10¼ [260]	8½ [216]
6 by 4*O	3½ [89]	4 [102]	5 3/16 [132]	10¾ [237]	13 [330]	15 [381]	4¼ [108]	7 13/16 [198]	4 [102]	12 [305]	10 [254]
6 by 5*O	3½ [89]	4 [102]	5⅜ [137]	11 7/16 [291]	14½ [368]	16½ [419]	5 1/16 [129]	9⅛ [232]	4½ [114]	13½ [343]	11½ [292]
8 by 2*O	3 [76]	5½ [140]	4¼ [108]	10⅞ [276]	10¾ [273]	14 [356]	3⅛ [79]	6½ [165]	3 [76]	10½ [267]	8¼ [210]
8 by 4*O	3½ [89]	5½ [140]	5 3/16 [132]	12¼ [311]	14 [356]	17 [432]	4¾ [121]	8 13/16 [224]	4 [102]	13½ [343]	11 [279]
8 by 5*O	3½ [89]	5½ [140]	5⅜ [137]	13 [330]	15½ [394]	18½ [470]	5½ [140]	10⅛ [257]	4½ [114]	15 [381]	12½ [318]
8 by 6*O	3½ [89]	5½ [140]	5 9/16 [141]	13 11/16 [348]	16⅞ [429]	20 [508]	6 5/16 [160]	11 5/16 [287]	5 [127]	16½ [419]	13⅞ [352]
Double:											
2*O	2¼ [57]	3½ [89]	4 [102]	6½ [165]	7⅜ [187]	10½ [267]	4 [102]	3⅜ [86]	3 [76]	8 [203]	4⅞ [124]
3*O	3¼ [83]	4 [102]	4 11/16 [119]	8¼ [210]	9¾ [248]	13¼ [337]	5 [127]	5 1/16 [129]	3½ [89]	10½ [267]	7 [178]
4*O	3½ [89]	4 [102]	5 3/16 [132]	9¾ [248]	12 [305]	15 [381]	5¼ [133]	6 13/16 [173]	4 [102]	12 [305]	9 [229]
6*O	3½ [89]	4 [102]	5 9/16 [141]	12¼ [311]	15⅞ [403]	18 [457]	5¾ [146]	10 5/16 [262]	5 [127]	15 [381]	12⅞ [327]
3 by 2*O	3 [76]	4 [102]	4¼ [108]	7 9/16 [192]	8¼ [210]	11¾ [298	4 3/16 [106]	4 [102]	3 [76]	9 [229]	5¾ [146]
4 by 2*O	3 [76]	4 [102]	4¼ [108]	8 5/16 [211]	8¾ [222]	12 [305]	3 11/16 [94]	4½ [114]	3 [76]	9 [229]	6¼ [146]
4 by 3*O	3¼ [83]	4 [102]	4 11/16 [119]	9 [229]	10¼ [260]	13½ [343]	4½ [114]	5 9/16 [141]	3½ [89]	10½ [267]	7½ [191]
5 by 4*O	3½ [89]	4 [102]	5 3/16 [132]	10¼ [260]	12½ [318]	15 [381]	4¾ [121]	7 5/16 [186]	4 [102]	12 [305]	9½ [241]
6 by 4*O	3½ [89]	4 [102]	5 3/16 [132]	10¾ [273]	13 [330]	15 [381]	4¼ [108]	7 13/16 [198]	4 [102]	12 [305]	10 [254]

[A] * indicates this item is made in extra heavy.
O indicates this item is made in service weight.
[B] For details of hubs and spigots, see Table 1; for details of side inlets, see Fig. 2.

Copyright ASTM International
Provided by IHS under license with ASTM
No reproduction or networking permitted without license from IHS
Not for Resale

TABLE 15 Dimensions of Sanitary T Branches, Single and Double

NOTE 1—1 in. = 25.4 mm.
NOTE 2—Dimensions *X* and *X′* are laying lengths.

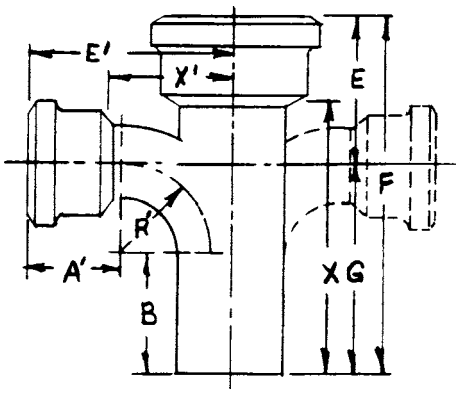

Size, in., Availability [A]	Dimensions in in. [B]								
	A′	*B*	*E*	*E′*	*F*	*G*	*R′*	*X*	*X′*
Single:									
2*O	2¾ [70]	3¾ [95]	4¼ [108]	5¼ [133]	10½ [267]	6¼ [159]	2½ [64]	8 [203]	2¾ [70]
3*O	3¼ [83]	4 [102]	5¼ [133]	6¾ [171]	12¾ [324]	7½ [191]	3½ [89]	10 [254]	4 [102]
4*O	3½ [89]	4 [102]	6 [152]	7½ [190]	14 [356]	8 [203]	4 [102]	11 [279]	4½ [114]
5*O	3½ [89]	4 [102]	6½ [165]	8 [203]	15 [381]	8½ [216]	4½ [114]	12 [305]	5 [127]
6*O	3½ [89]	4 [102]	7 [178]	8½ [216]	16 [406]	9 [229]	5 [127]	13 [330]	5½ [140]
8*O	4⅛ [105]	5¾ [146]	8¾ [222]	10⅛ [257]	20½ [521]	11¾ [298]	6 [152]	17 [432]	6⅝ [168]
10*O	4⅛ [105]	5¾ [146]	9¾ [248]	11⅛ [283]	22½ [572]	12¾ [324]	7 [178]	19 [483]	7⅝ [194]
12*O	5 [127]	7 [178]	11¾ [298]	13 [330]	26¾ [679]	15 [381]	8 [203]	22½ [572]	8¾ [222]
15*O	5 [127]	7 [178]	13¼ [337]	14½ [368]	29¾ [755]	16½ [419]	9½ [241]	25½ [648]	10¼ [260]
3 by 2*O	3 [76]	4 [102]	4¾ [121]	6½ [165]	11¾ [298]	7 [178]	3 [76]	9 [229]	4 [102]
4 by 2*O	3 [76]	4 [102]	5 [127]	7 [178]	12 [305]	7 [178]	3 [76]	9 [229]	4½ [114]
4 by 3*O	3¼ [83]	4 [102]	5½ [140]	7¼ [184]	13 [330]	7½ [191]	3½ [89]	10 [254]	4½ [114]
5 by 4*O	3½ [89]	4 [102]	6 [152]	8 [203]	14 [356]	8 [203]	4 [102]	11 [279]	5 [127]
6 by 2*O	3 [76]	4 [102]	5 [127]	8 [203]	12 [305]	7 [178]	3 [76]	9 [229]	5½ [140]
6 by 3*O	3¼ [83]	4 [102]	5½ [140]	8¼ [210]	13 [330]	7½ [191]	3½ [89]	10 [254]	5½ [140]
6 by 4*O	3½ [89]	4 [102]	6 [152]	8½ [216]	14 [356]	8 [203]	4 [102]	11 [279]	5½ [140]
8 by 4*O	3½ [89]	5¾ [146]	6¾ [171]	9½ [241]	16½ [419]	9¾ [248]	4 [102]	13 [330]	6½ [165]
8 by 6*O	3½ [89]	5¾ [146]	7¾ [197]	9½ [241]	18½ [470]	10¾ [273]	5 [127]	15 [381]	6½ [165]
10 by 4*O	3½ [89]	5¾ [146]	6¾ [171]	10½ [267]	16½ [419]	9¾ [240]	4 [102]	13 [330]	7½ [191]
10 by 6*O	3½ [89]	5¾ [146]	7¾ [197]	10½ [267]	18½ [470]	10¾ [273]	5 [127]	15 [381]	7½ [191]
10 by 8*O	4⅛ [105]	5¾ [146]	8¾ [222]	11⅛ [283]	20½ [521]	11¾ [298]	6 [152]	17 [432]	7⅝ [194]
12 by 6*O	3½ [89]	7 [178]	8¾ [222]	11½ [292]	20¾ [527]	12 [305]	5 [127]	16½ [419]	8½ [216]
12 by 8*O	4⅛ [105]	7 [178]	9¾ [248]	12⅛ [308]	22¾ [578]	13 [330]	6 [152]	18½ [470]	8⅝ [219]
12 by 10*O	4⅛ [105]	7 [178]	10¾ [273]	12⅛ [308]	24¾ [629]	14 [356]	7 [178]	20½ [521]	8⅝ [219]
15 by 6*O	3½ [89]	7 [178]	8¾ [222]	13 [330]	20¾ [527]	12 [305]	5 [127]	16½ [419]	10 [254]
15 by 8*O	4⅛ [105]	7 [178]	9¾ [248]	13⅜ [346]	22¾ [578]	13 [330]	6 [152]	18½ [470]	10⅛ [257]
15 by 10*O	4⅛ [105]	7 [178]	10¾ [273]	13⅜ [346]	24¾ [629]	14 [356]	7 [178]	20½ [521]	10⅛ [257]
15 by 12O	5 [127]	7 [178]	11¾ [298]	14½ [368]	26¾ [679]	15 [381]	8 [203]	22½ [572]	10¼ [260]
Double:									
2O	2¾ [70]	3¾ [95]	4¼ [108]	5¼ [133]	10½ [267]	6¼ [159]	2½ [64]	8 [203]	2¾ [70]
3O	3¼ [83]	4 [102]	5¼ [133]	6¾ [171]	12¾ [324]	7½ [191]	3½ [89]	10 [254]	4 [102]
4*O	3½ [89]	4 [102]	6 [152]	7½ [191]	14 [356]	8 [203]	4 [102]	11 [279]	4½ [114]
6O	3½ [89]	4 [102]	7 [178]	8½ [216]	16 [406]	9 [229]	5 [127]	13 [330]	5½ [140]
8O	4⅛ [105]	5¾ [146]	8¾ [222]	10⅛ [257]	20½ [521]	11¾ [298]	6 [152]	17 [432]	6⅝ [168]
3 by 2O	3 [76]	4 [102]	4¾ 121]	6½ [165]	11¾ [298]	7 [178]	3 [76]	9 [229]	4 [102]
4 by 2O	3 [76]	4 [102]	5 [127]	7 [178]	12 [305]	7 [178]	3 [76]	9 [229]	4½ [114]
4 by 3O	3¼ [83]	4 [102]	5½ [140]	7¼ [184]	13 [330]	7½ [191]	3½ [89]	10 [254]	4½ [114]
5 by 4O	3½ [89]	4 [102]	6 [152]	8 [203]	14 [356]	8 [203]	4 [102]	11 [279]	5 [127]
6 by 4O	3½ [89]	4 [102]	6 [152]	8½ [216]	14 [356]	8 [203]	4 [102]	11 [279]	5½ [140]
8 by 4O	3½ [89]	5¾ [146]	6¾ [171]	9½ [241]	16½ [419]	9¾ [248]	4 [102]	13 [330]	6½ [165]
8 by 6O	3½ [89]	5¾ [146]	7¾ [197]	9½ [241]	18½ [470]	10¾ [273]	5 [127]	15 [381]	6½ [165]

[A] * indicates this item is made in extra heavy.
O indicates this item is made in service weight.
[B] For details of hubs and spigots, see Table 1. For details of side inlets see Fig. 2.

Copyright ASTM International
Provided by IHS under license with ASTM
No reproduction or networking permitted without license from IHS
Not for Resale

TABLE 16 Dimensions of Sanitary T Branches, Cleanout Plug on Main

NOTE—1 in. = 25.4 mm.

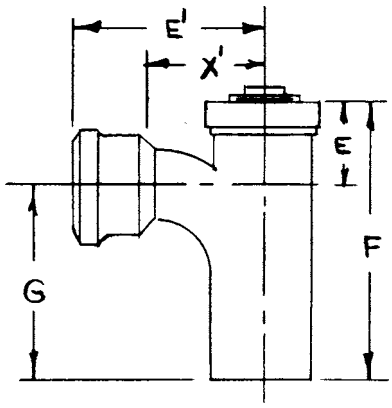

Size, in., Availability [A]	Dimensions in in. [B]					Minimum I.P.S. Tapping [C]
	E	*E'*	*F*	*G*	*X'*	
4*O 6O 8 by 4 8O	4⅛ [105]	7½ [191]	12⅛ [308]	8 [203]	4½ [114]	3½ [89]

[A] * indicates this item is made in extra heavy.
O indicates this item is made in service weight.
[B] For details of hubs and spigots see Table 1. For dimensions not given in this table, see Table 15.
[C] For details of tapping bosses, see Table 34; and for details of screw plugs, see Table 30.

Copyright ASTM International
Provided by IHS under license with ASTM
No reproduction or networking permitted without license from IHS
Not for Resale

TABLE 17 Dimensions of Sanitary T Branches, Tapped, Single and Double

NOTE 1—1 in. = 25.4 mm.
NOTE 2—Dimension *X* is the laying length.

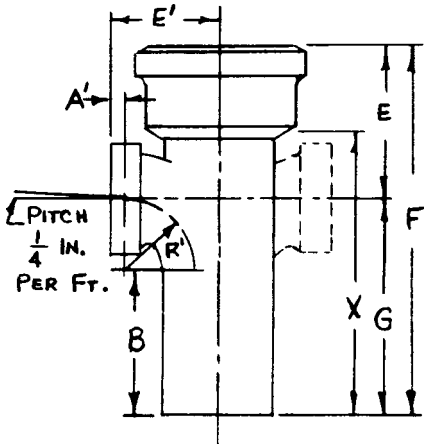

Size, in.,[A] Availability[B]	Dimensions in in.[C]							
	A'	*B*	*E*	*E'*	*F*	*G*	*R'*	*X*
2 by 2*O	13/16 [21]	4 [102]	4½ [114]	3 1/16 [78]	10½ [267]	6¼ [159]	2¼ [57]	8 [203]
3 by 2*O	13/16 [21]	4¾ [121]	4¾ [121]	3 9/16 [90]	11¾ [298]	7 [178]	2¼ [57]	9 [229]
4 by 2*O	13/16 [21]	4¾ [121]	5 [127]	4 1/16 [103]	12 [305]	7 [178]	2¼ [57]	9 [229]
2*O[D]	...	4½ [114]	...	2 13/16 [71]	...	...	1¾ [44]	...
3*O[D]	...	5¼ [133]	...	3 5/16 [84]	...	...	1¾ [44]	...
4*O[D]	...	5¼ [133]	...	3 13/16 [97]	...	...	1¾ [44]	...
Size, in.,[A] Availability[B]	Dimensions in in.[C]							
	A'	*B*	*E*	*E'*	*F*	*G*	*R'*	*X*
Double:								
2 by 2*O	13/16 [21]	4 [102]	4½ [114]	3 1/16 [78]	10½ [267]	6¼ [159]	2¼ [57]	8 [203]
3 by 2*O	13/16 [21]	4¾ [121]	4¾ [121]	3 9/16 [90]	11¾ [298]	7 [178]	2¼ [57]	9 [229]
4 by 2*O	13/16 [21]	4¾ [121]	5 [127]	4 1/16 [103]	12 [305]	7 [178]	2¼ [57]	9 [229]
2*O[D]	...	4½ [114]	...	2 13/16 [71]	...	...	1¾ [44]	...
3*O[D]	...	5¼ [133]	...	3 5/16 [84]	...	...	1¾ [44]	...
4*O[D]	...	5¼ [133]	...	3 13/16 [97]	...	...	1¾ [44]	...

[A] All sizes of branches are furnished with 1¼ and 1½ in. tappings, in addition to the 2 in. tapping.
[B] * indicates this item is made in extra heavy.
O indicates this item is made in service weight.
[C] For details of hubs and spigots, see Table 1. For details of tapping bosses, see Table 34.
[D] Dimensions for 1¼ in. and 1½ in. tapping only.

Copyright ASTM International
Provided by IHS under license with ASTM
No reproduction or networking permitted without license from IHS
Not for Resale

TABLE 18 Dimensions of T Branches, Single and Double

NOTE 1—1 in. = 25.4 mm.
NOTE 2—T branches are intended for venting and cleanout purposes only, and branch openings are not intended for use as waste inlets.
NOTE 3—Dimensions *X* and *X′* are laying lengths.

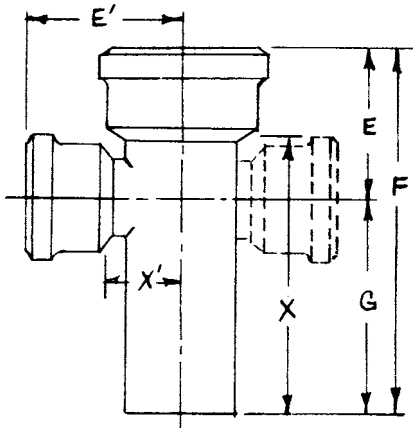

Size, in., Availability [A]	Dimensions in in.[B]					
	E	*E′*	*F*	*G*	*X*	*X′*
Single:						
2*O	4¼ [108]	4¼ [108]	10½ [267]	6¼ [159]	8 [203]	1¾ [44]
3*O	5¼ [133]	5¼ [133]	12¾ [324]	7½ [191]	10 [254]	2½ [64]
4*O	6 [152]	6 [152]	14 [356]	8 [203]	11 [279]	3 [76]
5*O	6½ [165]	6½ [165]	15 [381]	8½ [216]	12 [306	3½ [89]
6*O	7 [178]	7 [178]	16 [406]	9 [229]	13 [330]	4 [102]
3 by 2*O	4¾ [121]	5 [127]	11¾ [298]	7 [178]	9 [229]	2½ [64]
4 by 2*O	5 [127]	5½ [140]	12 [305]	7 [178]	9 [229]	3 [76]
4 by 3*O	5½ [140]	5¾ [146]	13 [330]	7½ [191	10 [254]	3 [76]
6 by 4*O	6 [152]	7 [178]	14 [356]	8 [203]	11 [279]	4 [102]
Size, in., Availability[A]	Dimensions in in.[B]					
	E	*E′*	*F*	*G*	*X*	*X′*
Double:						
4*O	6 [152]	6 [152]	14 [356]	8 [203]	11 [279]	3 [76]
4 by 2*O	5 [127]	5½ [140]	12 [305]	7 [178]	9 [229]	3 [76]

[A] * indicates this item is made in extra heavy.
O indicates this item is made in service weight.
[B] For details of hubs and spigots, see Table 1.

Copyright ASTM International
Provided by IHS under license with ASTM
No reproduction or networking permitted without license from IHS
Not for Resale

TABLE 19 Dimensions of Tapped T Branches, Single and Double

NOTE 1—1 in. = 25.4 mm.
NOTE 2—Tapped T branches are intended for venting and cleanout purposes only, and branch openings are not intended for use as waste inlets.
NOTE 3—Dimension *X* is the laying length.
NOTE 4—Dimensions given apply to branches tapped 1¼ , 1½ and 2 in., I.P.S.

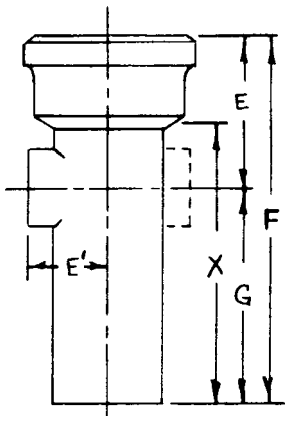

Size, in., Availability[A]	Dimensions in in.[B]					I.P.S. Tapping
	E	*E′*	*F*	*G*	*X*	
Single:						
2*O	4¼ [108]	2 [51]	10½ [267]	6¼ [159]	8 [203]	1¼ –1½ –2 [32-38-51]
3*O	4¾ [121]	2½ [64]	11¾ [298]	7 [178]	9 [229]	1¼ –1½ –2 [32-38-51]
4*O	5 [127]	3 [76]	12 [305]	7 [178]	9 [229]	1¼ –1½ –2 [32-38-51]
5*O	5 [127]	3½ [89]	12 [305]	7 [178]	9 [229]	1¼ –1½ –2 [32-38-51]
6O	5 [127]	4 [102]	12 [305]	7 [178]	9 [229]	1¼ –1½ –2 [32-38-51]
4 by 2*O	3	3	12	7	9	
4 by 3*O	6 [152]	3 [76]	14 [356]	8 [203]	11 279]	3 [76]
5 by 4*O	6½ [165]	3½ [89]	15 [381]	8½ [215]	12 [305]	4 [102]
6 by 4*O	7 [178]	4 [102]	16 [406]	9 [229]	13 [330]	4 [102]
Size, in., Availability[A]	Dimensions in in.[B]					I.P.S. Tapping
	E	*E′*	*F*	*G*	*X*	
Double:						
2O	4¼ [108]	2 [51]	10½ [267]	6¼ [159]	8 [103]	1¼ –1½ –2 [32-38-51]
3*O	4¾ [121]	2½ [64]	11¾ [298]	7 [178]	9 [229]	1¼ –1½ –2 [32-38-51]
3 by 2*O	2½		11¾	7	9	
4*O	5 [127]	3 [76]	12 [305]	7 [178]	9 [229]	1¼ –1½ –2 [32-38-51]
4 by 2*O	3	3	12	7	9	
5 by 2*O	3½ [189]	5 [127]	12 [305]	7 [178]	9 [229]	2 [51]

[A] * indicates this item is made in extra heavy.
O indicates this item is made in service weight.
[B] For details of hubs and spigots, see Table 1. For details of tapping bosses, see Table 34.

Copyright ASTM International
Provided by IHS under license with ASTM
No reproduction or networking permitted without license from IHS
Not for Resale

TABLE 20 Dimensions of T Branch Cleanout with Screw Plug

NOTE 1—1 in. = 25.4 mm.
NOTE 2—Dimension *X* is the laying length.

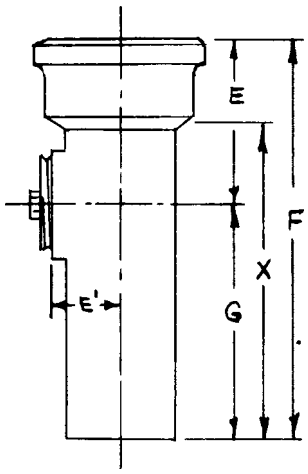

Size, in., Availability[A]	Dimensions in in.[B]					I.P.S. Tapping
	E	*E'*	*F*	*G*	*X*	
2 by 1½ *O	4¼ [108]	2 [51]	10½ [267]	6¼ [159]	8 [203]	1½ [38]
3 by 2½ *O	5¼ [133]	2½ [64]	12¾ [324]	7½ [191]	10 [254]	2½ [64]
4 by 3½ *O	6 [152]	3 [76]	14 [356]	8 [103]	11 [279]	3½ [89]
5 by 4*O	6½ [165]	3½ [89]	15 [381]	8½ [216]	12 [305]	4 [102]
6 by 4*O	7 [178]	4 [102]	16 [406]	9 [229]	13 [330]	4 [102]
12 by 8O	8			13	18½	

[A] * indicates this item is made in extra heavy.
O indicates this item is made in service weight.
[B] For details of hubs and spigots, see Table 1. For details of topping bosses, see Table 34.

Copyright ASTM International
Provided by IHS under license with ASTM
No reproduction or networking permitted without license from IHS
Not for Resale

TABLE 21 –45° Offset Fitting[A,B]

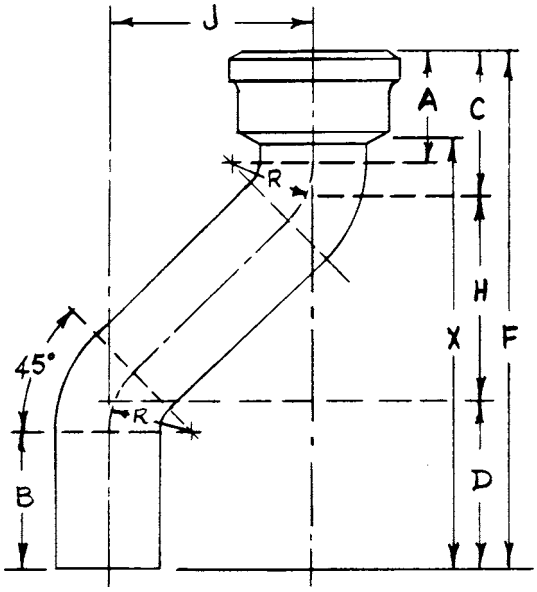

Size	X	B	J
4 by 4 O	11 [279]	4 [102]	4 [102]
4 by 6 O	13 [330]	4 [102]	6 [152]
4 by 8 O	15 [381]	4 [102]	8 [203]

[A] O indicates this item is made in service weight.
[B] For details of hubs and spigots, see Table 1.

TABLE 22 Dimensions of Double Hub and Long Double Hub

NOTE 1—1 in. = 25.4 mm.
NOTE 2—Dimension *X* is the laying length.
NOTE 3—This item shall be classified as a fitting.

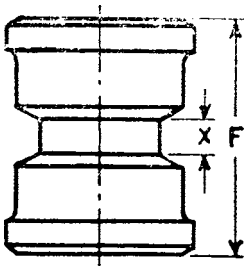

Long Double Hubs:

Size, in.[A,B]	*F*, in.	*X*, in.
2 by 30*O	30 [762]	25 [635]
3 by 30*O	30 [762]	24½ [622]
4 by 30*O	30 [762]	24 [610]

[A] For details of hubs and spigots, see Table 1.
[B] * indicates this item is made in extra heavy.
O indicates this item is made in service weight.

Copyright ASTM International
Provided by IHS under license with ASTM
No reproduction or networking permitted without license from IHS
Not for Resale

TABLE 23 Dimensions of Reducers

NOTE 1—1 in. = 25.4 mm.
NOTE 2—Dimension *X* is the laying length.

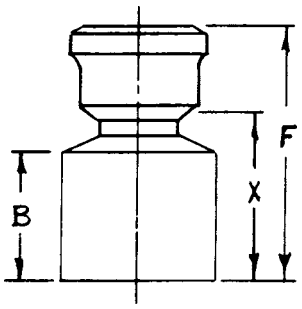

Size, in. Availability[A]	*B*, in.	*F*, in.	*X*, in.	Size, in. Availability[B]	*B*, in.	*F*, in.	*X*, in.
3 by 2*O	3¾ [95]	7¼ [184]	4¾ [121]	8 by 6*O	4½ [114]	9 [229]	6 [152]
4 by 2*O	4 [102]	7½ [191]	5 [127]	10 by 4*O	4½ [114]	9 [229]	6 [152]
4 by 3*O	4 [102]	7¾ [197]	5 [127]	10 by 5*O	4½ [114]	9 [229]	6 [152]
5 by 2*O	4 [102]	7½ [191]	5 [127]	10 by 6*O	4½ [114]	9 [229]	6 [152]
5 by 3*O	4 [102]	7¾ [197]	5 [127]	10 by 8*O	4½ [114]	9½ [241]	6 [152]
5 by 4*O	4 [102]	8 [203]	5 [127]	12 by 4*O	5¼ [133]	9½ [241]	6½ [165]
6 by 2*O	4 [102]	7½ [192]	5 [127]	12 by 5*O	5¼ [133]	9½ [241]	6½ [165]
6 by 3*O	4 [102]	7¾ [197]	5 [127]	12 by 6*O	5¼ [133]	9½ [241]	6½ [165]
6 by 4*O	4 [102]	8 [203]	5 [127]	12 by 8*O	5¼ [133]	10 [254]	6½ [165]
6 by 5*O	4 [102]	8 [203]	5 [127]	12 by 10*O	5¼ [133]	10 [254]	6½ [165]
8 by 2*O	4½ [114]	8½ [216]	6 [152]	15 by 6*O	5¼ [133]	9½ [241]	6½ [165]
8 by 3*O	4½ [114]	8¾ [222]	6 [152]	15 by 8*O	5¼ [133]	10 [254]	6½ [165]
8 by 4*O	4½ [114]	9 [229]	6 [152]	15 by 10*O	5¼ [133]	10 [254]	6½ [165]
8 by 5*O	4½ [114]	9 [229]	6 [152]	15 by 12*O	5¼ [133]	10¾ [273]	6½ [165]

[A] * indicates this item is made in extra heavy.
O indicates this item is made in service weight.
[B] For details of hubs and spigots, see Table 1.

Copyright ASTM International
Provided by IHS under license with ASTM
No reproduction or networking permitted without license from IHS
Not for Resale

TABLE 24 Dimensions of Increaser

NOTE 1—1 in. = 25.4 mm.
NOTE 2—Dimension *X* is the laying length.

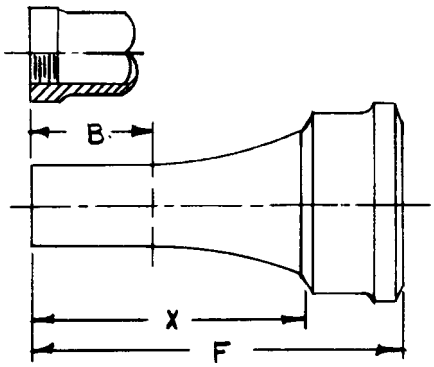

Size, in. Availability[A]	*B*,[B] in.	*F*,[B] in.	*S*,[B] in.
2 by 3*O	4 [102]	11¾ [298]	9 [229]
2 by 4*O	4 [102]	12 [305]	9 [229]
3 by 4*O	4 [102]	12 [305]	9 [229]
4 by 5*O	4 [102]	12 [305]	9 [229]
4 by 6*O	4 [102]	12 [305]	9 [229]
4 by 8*O	4 [102]	15½ [394]	12 [305]
5 by 6*O			
6 by 8*O	4 [102]	15½ [394]	12 [305]
8 by 10*O			
10 by 12*O	7 [178]	16¼ [413]	12 [305]
12 by 5*O			
15 by 12O			

[A] * indicates this item is made in extra heavy.
O indicates this item is made in service weight.
[B] For details of hubs and spigots, see Table 1.

Copyright ASTM International
Provided by IHS under license with ASTM
No reproduction or networking permitted without license from IHS
Not for Resale

TABLE 25 Dimensions of Long Increasers, Spigot and Tapped

NOTE 1—1 in. = 25.4 mm.
NOTE 2— First size given for long increasers is spigot size. First size given for long increasers, tapped, is tapping size.
NOTE 3—All markings shall be on small end and in space indicated by dimension *C*.
NOTE 4—Dimension *L* is the laying length.

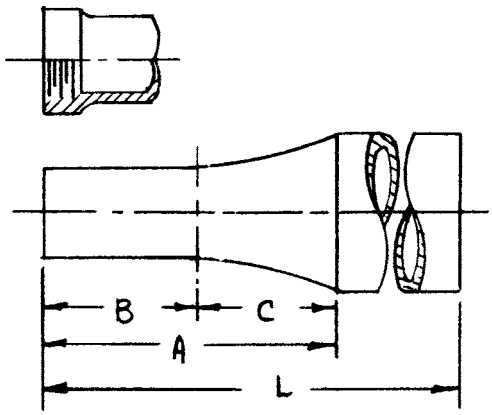

Size, in. Availability[A]	Dimensions in in.[B]			
	A	*B*	*C*	*L*
2 by 4 by 24O	8½ [216]	4 [102]	4½ [114]	24 [610]
2 by 4 by 30O	8½ [216]	4 [102]	4½ [114]	30 [762]
3 by 4 by 24O	8½ [216]	4 [102]	4½ [114]	24 [610]
4 by 5 by 30O	11¼ [286]	4 [102]	7¼ [184]	30 [762]
4 by 6 by 30O	12½ [318]	4 [102]	8½ [216]	30 [762]

[A] O indicates this item is made in service weight.
[B] For details of hubs and spigots, see Table 1. For details of tapping bosses, see Table 34.

TABLE 26 Dimensions of P Traps with Cleanout

NOTE 1—1 in. = 25.4 mm.
NOTE 2—A minimum water seal of 2 in. is provided for the 2-in. size; of 2½ in. for sizes 3 to 6 in., inclusive.
NOTE 3—Dimensions *D* and *X* are laying lengths. Dimension *X* is measured below the horizontal center line.
NOTE 4—Traps with tapped cleanout shall have tappings of sizes indicated below.
NOTE 5—Tap at position *Z* shall be specified as right side, left side, or bottom.

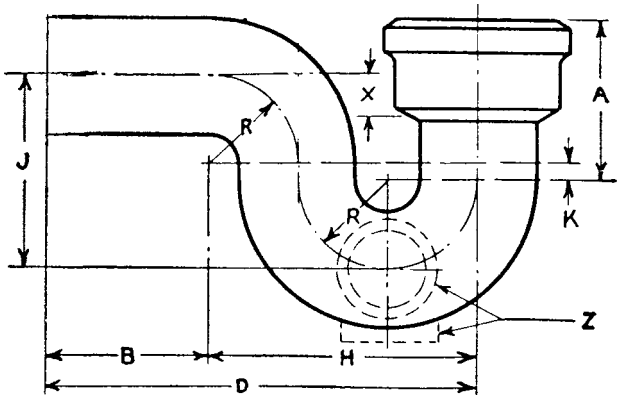

Size, in.	Availability[A]	Dimensions in in.[B]									
		A	*B*	*C*	*D*	*F*	*H*	*J*	*K*	*R*	*X*
4	O	5½ [140]	5 [140]	6 [152]	14 [356]	6 [152]	9 [229]	6½ [165]	½ [13]	3 [76]	1 [25]

Size, in.	IPS Tapping at *Z*, in.
4	3 [76]

[A] O indicates this item is made in service weight.
[B] For details of hubs and spigots, see Table 1. For details of tapping bosses, see Table 34.

Copyright ASTM International
Provided by IHS under license with ASTM
No reproduction or networking permitted without license from IHS
Not for Resale

TABLE 27 Dimensions of Plain P Trap

NOTE 1—1 in. = 25.4 mm.
NOTE 2—A minimum water seal of 2 in. is provided for the 2-in. size, of 2½ in. for sizes 3 to 6 in., inclusive.
NOTE 3—Dimensions *D* and *X* are laying lengths. Dimension *X* is measured below the horizontal center line on sizes 5 by 5 in. and smaller.

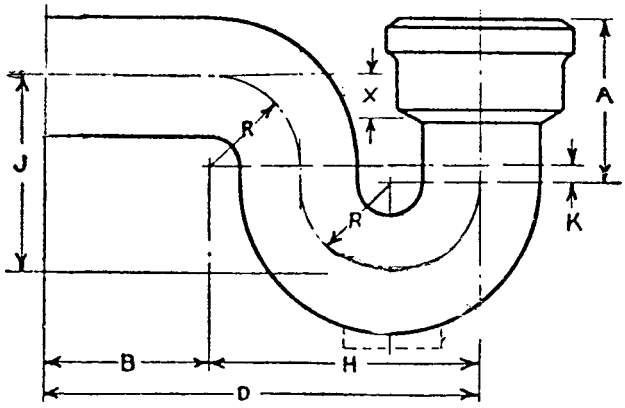

Size, in Trap by Vents	Availability[A]	Dimensions in in.[B]							
		A	B	D	H	J	K	R	X
2	*O	3 [76]	3½ [89]	9½ [241]	6 [152]	4 [102]	...	2 [51]	1½ [38]
3	*O	4½ [114]	4½ [114]	12 [305]	7½ [191]	5½ [135]	½ [13]	2½ [64]	1¼ [32]
4	*O	5½ [140]	5 [127]	14 [356]	9 [229]	6½ [165]	½ [13]	3 [76]	1 [25]
5	*O	6½ [165]	5 [127]	15½ [394]	10½ [267]	7½ [191]	½ [13]	3½ [89]	½ [13]
6	*O	7½ [191]	5 [127]	17 [432]	12 [305]	8½ [216]	½ [13]	4 [102]	...
8	*O	10½ [267]	7 1/16 [179]	22 1/16 [560]	15 [381]	11½ [292]	1½ [38]	5 [127]	½ [13]
10	O	13 [330]	7 [178]	25 [635]	18 [457]	14 [356]	2 [51]	6 [152]	½ [38]

[A] * indicates this item is made in extra heavy.
O indicates this item is made in service weight.
[B] For details of hubs and spigots, see Table 1. For details of topping bosses, see Table 33.

Copyright ASTM International
Provided by IHS under license with ASTM
No reproduction or networking permitted without license from IHS
Not for Resale

TABLE 28 Dimensions of Deep Seal P Trap

NOTE 1—1 in. = 25.4 mm.
NOTE 2—Dimension D is the laying length.

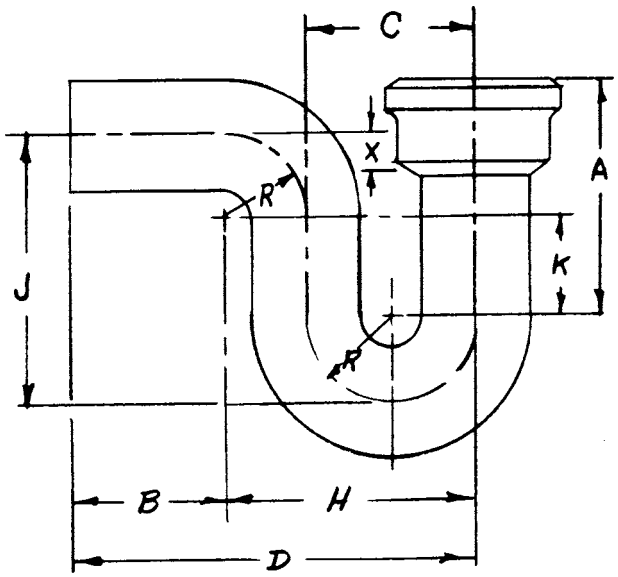

Size, in., Availability[A]	Dimensions in in.[B]								
	A	B	C	D	H	J	K	R	X
2*O	5 [127]	3½ [89]	4 [102]	9½ [241]	6 [152]	6 [152]	2 [51]	2 [51]	1½ [38]
3*O	6 [152]	4½ [114]	5 [127]	12 [305]	7½ [191]	7 [178]	2 [51]	2½ [64]	1¼ [32]
4*O	7 [178]	5 [127]	6 [152]	14 [356]	9 [229]	8 [203]	2 [51]	3 [76]	1¼ [32]
6O						9½			17

[A] * indicates this item is made in extra heavy.
O indicates this item is made in service weight.
[B] For details of hubs and spigots, see Table 1.

Copyright ASTM International
Provided by IHS under license with ASTM
No reproduction or networking permitted without license from IHS
Not for Resale

TABLE 29 Dimensions of Running Traps With or Without Single or Double Vents and Cleanout

NOTE 1—1 in. = 25.4 mm.

NOTE 2—A minimum water seal of 2 in. is provided for the 2-in. size; of 2½ in. for sizes 3 to 6 in., inclusive; of 3 in. for sizes 8 to 12 in., inclusive; and of 3½ in. for the 15-in. size.

NOTE 3—Dimensions *X* and *X'* are laying lengths.

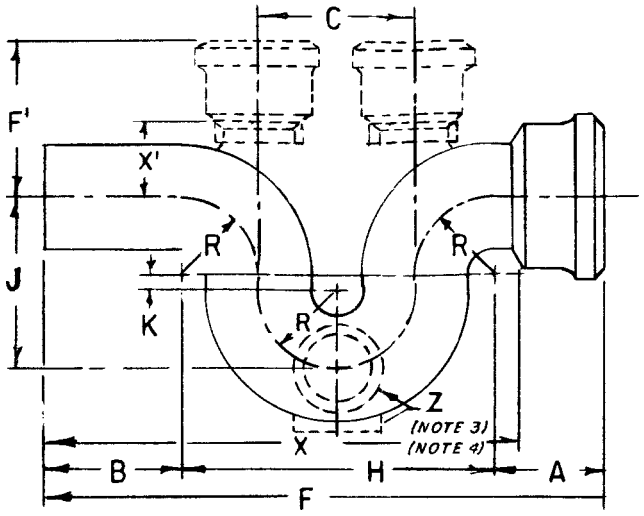

Size, in. Trap by Vent, Availability	Dimensions in in.[A]									
	A	*B*	*C*	*F*	*F'*	*H*	*K*	*R*	*X*	*X'*
3 by 3*O	3¼ [83]	4½ [114]	5 [127]	17¾ [451]	5¼ [133]	10 [254]	½ [13]	2½ [64]	15 [381]	2½ [64]
4 by 4*O	3½ [83]	5 [127]	6 [152]	20½ [521]	6 [152]	12 [305]	½ [13]	3 [76]	17½ [445]	3 [76]
5 by 4*O	3½ [83]	5 [127]	7 [178]	22½ [572]	6½ [165]	14 [356]	½ [13]	3½ [89]	19½ [495]	3½ [89]
6 by 4*O	3½ [83]	5 [127]	8 [203]	24½ [622]	7 [178]	16 [406]	½ [13]	4 [102]	21½ [546]	4 [102]
6 by 6*O	3½ [83]	5 [127]	8 [203]	24½ [622]	7 [178]	16 [406]	½ [13]	4 [102]	21½ [546]	4 [102]
8 by 4*O	4⅛ [105]	7 [178]	10 [254]	31⅛ [791]	8¼ [210]	20 [508]	1 [25]	5 [127]	27⅝ [702]	5¼ [133]
8 by 6*O	4⅛ [105]	7 [178]	10 [254]	31⅛ [791]	8¼ [210]	20 [508]	1 [25]	5 [127]	27⅝ [702]	5¼ [133]
10 by 8*O	4⅛ [105]	7 [178]	12 [305]	35⅛ [892]	9¼ [235]	24 [610]	1 [25]	6 [152]	31⅝ [803]	6¼ [159]
12 by 6*O	5 [127]	8 [203]	15 [381]	43 [1092]	10¼ [260]	30 [762]	. . .	7½ [191]	38¾ [984]	7¼ [184]
12 by 10O	5 [127]	8 [203]	15 [381]	43 [1092]	10¼ [260]	30 [762]	. . .	7½ [191]	38¾ [984]	7¼ [184]
15 by 12O	5 [127]	8 [203]	18½ [470]	50 [1270]	13 [330]	37 [940]	. . .	9¼ [235]	45¾ [1162]	8¾ [222]

[A] For details of hubs and spigots, see Table 1. * indicates this item is made in extra heavy. O indicates this item is made in service weight. For details of tapping bosses, see Table 34.

Copyright ASTM International
Provided by IHS under license with ASTM
No reproduction or networking permitted without license from IHS
Not for Resale

TABLE 30 Dimensions of Screw Plugs (Brass) for 'XH' and 'SV'

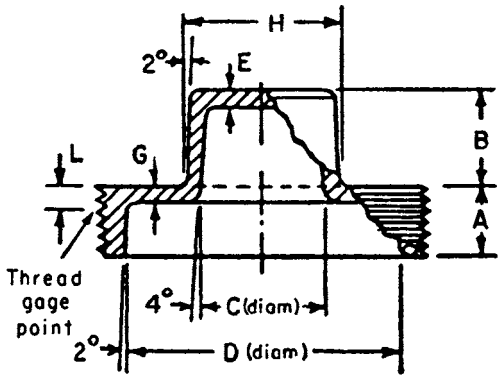

NOTE 1—1 in. = 25.4 mm.
NOTE 2—When thread gage is screwed tightly on plug by hand, large end of gage shall be the distance *L* ± 1½ turns from surface of plug.

Size, in.	Dimensions, in.[A]							
	A	*B*	*C*	*D*	*E*	*G*	Across flats *H*	*L*
1¼	½ [13]	½ [13]	¾ [19]	1 5/16 [33]	5/32 [4]	⅛ [3]	1 [25]	5/32 [4]
1½	⅝ [16]	¾ [19]	¾ [19]	1½ [38]	3/16 [5]	⅛ [3]	1 [25]	3/16 [5]
2	⅝ [16]	¾ [19]	1 [25]	2 [51]	3/16 [5]	⅛ [3]	1¼ [32]	3/16 [5]
2½	¾ [19]	¾ [19]	1 5/16 [24]	2⅜ [60]	3/16 [5]	5/32 [4]	1¼ [32]	¼ [6]
3	¾ [19]	1 [25]	1 15/16 [49]	2 15/16 [75]	3/16 [5]	5/32 [4]	1⅝ [42]	¼ [6]
3½	¾ [19]	1 [25]	1¼ [32]	3 7/16 [87]	¼ [6]	3/16 [5]	1⅝ [42]	¼ [6]
4	⅞ [22]	1 [25]	1⅝ [41]	3 15/16 [100]	¼ [6]	3/16 [5]	2 [51]	5/16 [8]
5	1 [25]	1 [25]	1 15/16 [49]	4 15/16 [125]	⅝ [8]	7/32 [6]	2⅜ [60]	⅜ [10]3]
6	1 [25]	1 [25]	1⅞ [48]	5 15/16 [151]	⅜ [10]	¼ [6]	2⅜ [60]	⅜ [10]

[A] Heads of plugs shall be either square or hexagonal. Dimension *H* is taken between opposite sides of either style used.

TABLE 31 Dimensions of Blind Plugs

NOTE—1 in. = 25.4 mm.

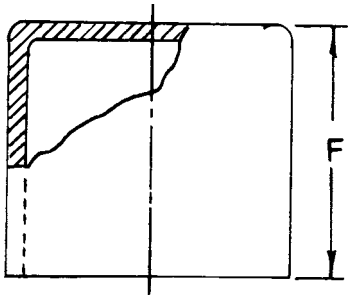

Size, in.[A] Availability[B]	*F*, in.
2*O	3½ [89]
3*O	3¾ [95]
4*O	4 [102]
5*O	4 [102]
6*O	4 [102]
8*O	4½ [114]
10*O	4½ [114]
12*O	5¼ [133]
15*O	5¼ [133]

[A] For dimensions of open end (spigot) and wall thickness, see Table 1.
[B] * indicates this item is made in extra heavy.
O indicates this item is made in service weight.

Copyright ASTM International
Provided by IHS under license with ASTM
No reproduction or networking permitted without license from IHS
Not for Resale

TABLE 32 Dimensions of Iron Body Ferrules With Screw Plugs

NOTE 1—1 in. = 25.4 mm.
NOTE 2—Tappings for sizes 2 in. to 6 in., inclusive, allow entrance for testing plugs. See Table 30 for screw plugs.

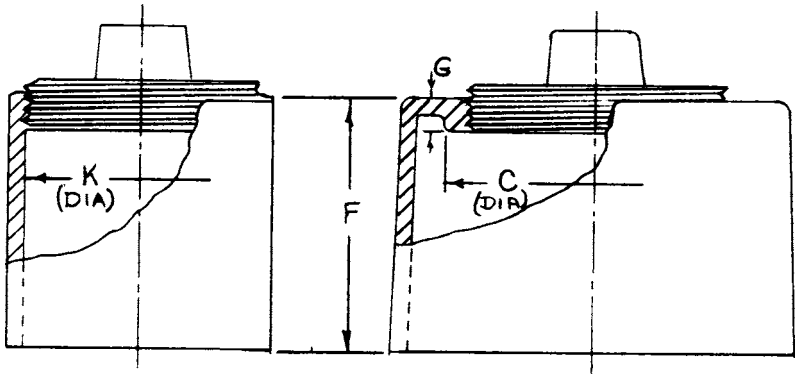

Size, in., Availability[A]	Dimensions, in.[B]					
	C	*F*	I.P.S. Tapping	Tapping Depth of *G*	*K*	*R*
2*O	...	3½ [89]	1½ [38]	½ [13]	2 [51]	1¼ [32]
3*O	...	3¾ [95]	2½ [64]	9/16 [14]	3 [76]	1⅜ [35]
4*O	...	4¼ [108]	3½ [89]	9/16 [14]	4 [102]	1½ [38]
5*O	...	4¼ [108]	4 [102]	⅝ [16]	5 [127]	1½ [38]
6*O	...	4¼ [108]	5 [127]	⅝ [16]	6 [152]	1½ [38]
8*O	7⅜ [187]	4½ [114]	6 [152]	¾ [19]	8 [203]	1⅞ [48]
10*O	7½ [191]	4½ [114]	6 [152]	¾ [19]	10 [254]	1⅞ [48]
12*O	7½ [191]	5¼ [133]	6 [152]	¾ [19]	12 [305]	2⅜ [60]
15*O	7½ [191]	5¼ [133]	6 [152]	¾ [19]	15 [381]	2⅜ [60]

[A] * indicates this item is made in extra heavy.
O indicates this item is made in service weight.
[B] For dimensions of open end (spigot) and wall thickness, see Table 1.

Copyright ASTM International
Provided by IHS under license with ASTM
No reproduction or networking permitted without license from IHS
Not for Resale

TABLE 33 Dimensions of Closet Bends

NOTE 1—1 in. = 25.4 mm.
NOTE 2—Laying lengths determined by the manufacturer standard interval for lengths is 2 in.
NOTE 3—Optional features are: Break off grooves, driving lugs, tapping bosses, plug inlets, and screw joints.

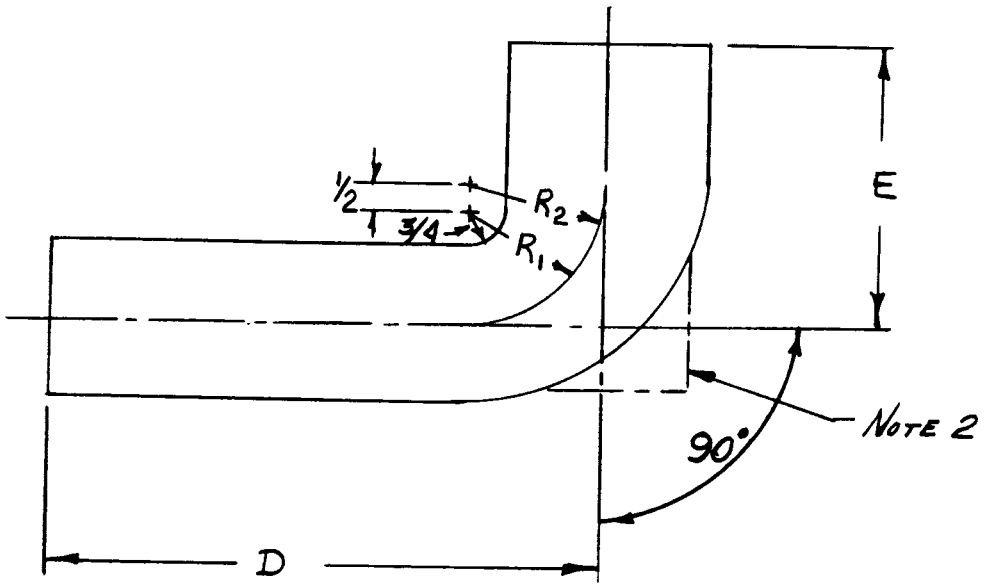

Size, in., Availability[A]	Dimensions in in.[B,C]			
	D	*E*	*R1*	*R2*
3 by 4O	15	6		
3 by 4O	12	6		
3 by 4O	18	6		
3 by 4O	12	10		
3 by 4O	15	10		
3 by 4O	16	10		
3 by 4O	16	12		
3 by 4O	16	16		
4 by 4O	15	6		
4 by 4O	12	6		
4 by 4O	16	6		
4 by 4O	18	6		
4 by 4O	12	10		
4 by 4O	15	10		
4 by 4O	16	10		
4 by 4O	16	12		
4 by 4O	18	12		
4 by 4O	16	16		
Hubbed				
4 by 3O	16	5¾		
4 by 4O	12	5¾		
4 by 4O	14	5¾		
4 by 4O	16	5¾		
4 by 4O	18	5¾		

[A] * indicates this item is made in extra heavy.
O indicates this item is made in service weight.
[B] For details of spigot and barrel dimensions see Table 1.
[C] For details of tapping bosses, see Table 34.

Copyright ASTM International
Provided by IHS under license with ASTM
No reproduction or networking permitted without license from IHS
Not for Resale

TABLE 34 Dimensions of Tapping Bosses for 'XH' and 'SV'

NOTE— 1 in. = 25.4 mm.

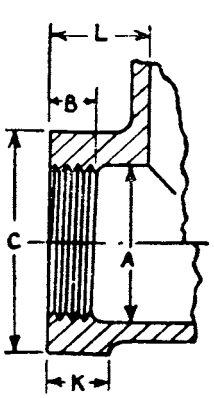

Details of tapping bosses, 1¼- to 5-in. sizes.

a

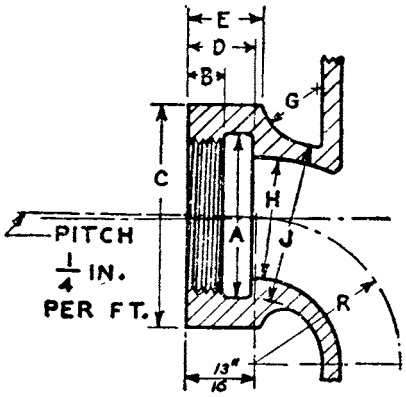

Details of tapping bosses, 1¼- to 2-in. sizes.

b

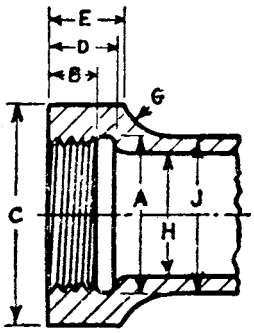

Details of tapping bosses, 1¼- to 4-in. sizes.

c

Size, in.	Dimensions, in.										
	A	B	C	D	E	G	H	J	K	L	R
1¼	1 15/16	7/16	2 11/16	3/4	7/8	1/2	1½	1 7/8	...	1	1¾
1½	1 15/16	7/16	2 11/16	3/4	7/8	1/2	1½	1 7/8	3/4	1	1¾
2	2 7/16	7/16	3¼	3/4	15/16	5/8	2	2 3/8	...	1	2¼
2½	2 15/16	3/4	3 7/8	...	...	...	...	...	1	...	...
3	3 9/16	3/4	4 5/8	1 3/16	1 5/16	1	3	3½	1	...	...
3½	4 1/16	3/4	5 1/8	...	...	...	...	...	1 1/8	...	...
4	4 9/16	13/16	5¾	1¼	1 7/16	1 1/8	4	4½	1 1/8	...	...
5	5 5/8	15/16	7 1/16	...	...	...	...	...	1 3/8	...	...

Copyright ASTM International
Provided by IHS under license with ASTM
No reproduction or networking permitted without license from IHS
Not for Resale

TABLE 35 Reducing One-Quarter Bend

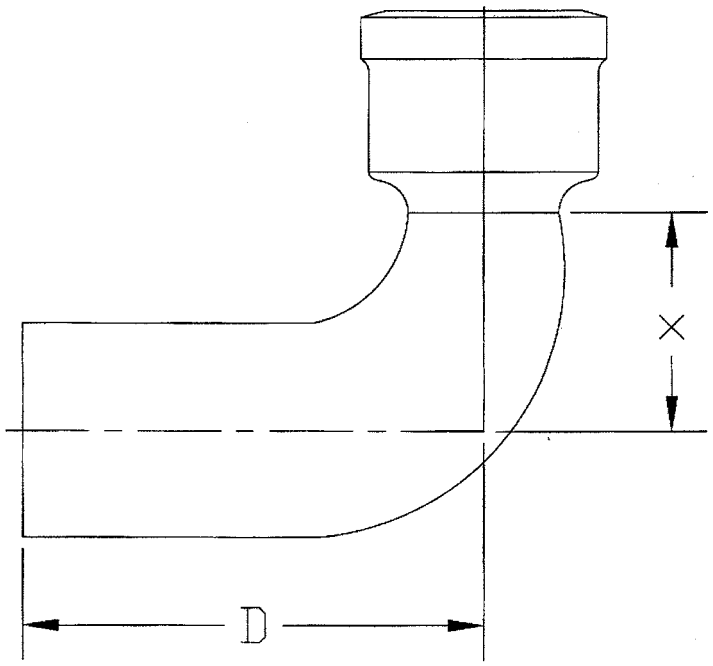

Size[A]	A	B	C	D	R	X
3 by 2O						
4 by 2O	3 [76]	3¾ [95]	6¼ [159]	7 [178]	3¼ [83]	3¾ [95]
4 by 3O	2 13⁄16 [71]	3 13⁄16 [97]	7⅛ [181]	8⅛ [206]	4 5⁄16 [110]	4⅜ [111]

[A] O indicates this item is made in service.

Copyright ASTM International
Provided by IHS under license with ASTM
No reproduction or networking permitted without license from IHS
Not for Resale

TABLE 36 4 in. Combination Y and One-Eighth Bend, Single A and Double, with 2 in. S.O. Service

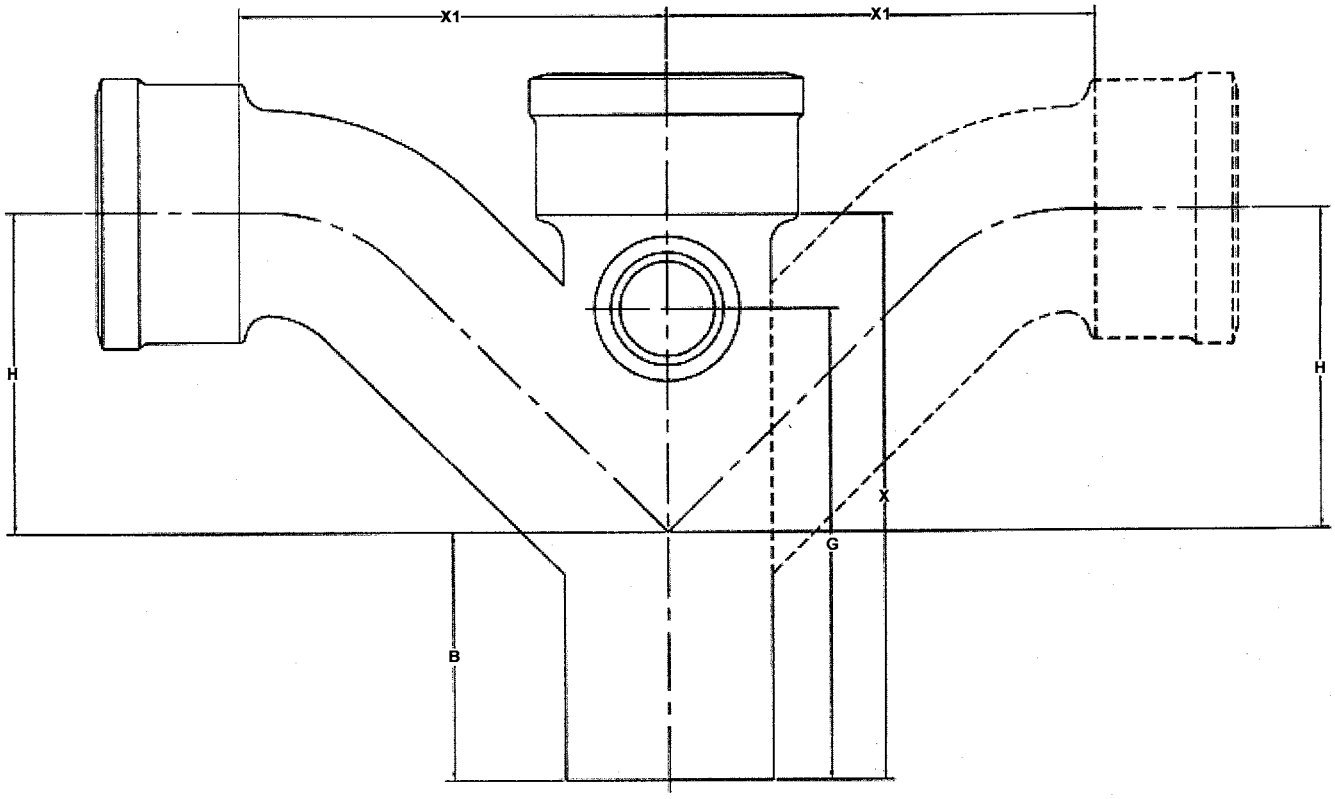

Size[A]	A[1]	B	C[1]	D	E	E[1]	F	G	H	J	R[1]	X	X[1]
4O	3½ [89]	4 [102]	5³⁄₁₆ [132]	10 [254]	9¾ [248]	12 [305]	15 [381]	5¼ [133]	6¹³⁄₁₆ [173]	5⁵⁄₆₄ [128]	4 [102]	12 [305]	9 [229]

[A] O indicates this item available in service.

Copyright ASTM International
Provided by IHS under license with ASTM
No reproduction or networking permitted without license from IHS
Not for Resale

TABLE 37 'H' Branch Fitting (SV)

NOTE—2-in. size is available with tapping boss.

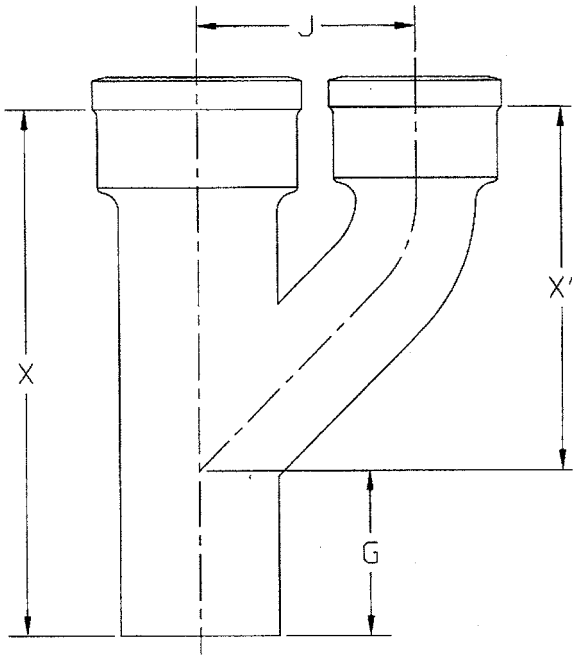

Size	A[1]	B	C[1]	E	F	G	J	R	X	X[1]	AA	BB
2 in.	2¾ [70]	3½ [89]	4 [102]	8½ [216]	12½ [318]	4 [102]	4½ [114]	3 [76]	10 [254]	6 [152]	2½ [64]	2½ [64]
3 in.	3¼ [83]	4¼ [108]	4 11/16 [119]	10 3/16 [259]	15 3/16 [386]	5 [127]	5½ [140]	3½ [89]	12 7/16 [316]	7 7/16 [189]	2¾ [70]	2½ [64]
3 by 2	3 [76]	4¼ [108]	4¼ [108]	9¼ [235]	13 7/16 [341]	4 3/16 [106]	5 [127]	3 [76]	10 11/16 [271]	6¾ [171]	2¾ [70]	2½ [64]
4 in.	3½ [89]	4 3/8 [111]	5 3/16 [132]	11 11/16 [297]	16 15/16 [430]	5¼ [133]	6½ [165]	4 [102]	13 15/16 [354]	8 11/16 [221]	3 [76]	3 [76]
4 by 3	3¼ [83]	4¼ [108]	4 11/16 [119]	10 11/16 [271]	15 3/16 [386]	4½ [114]	6 [152]	3½ [89]	12 3/16 [309]	7 5/16 [186]	3 [76]	2¾ [70]

SUPPLEMENTARY REQUIREMENTS

The following supplementary requirements shall be applied only when specified by the purchaser. Details of the supplementary requirements shall be agreed upon by the manufacturer and the purchaser. The specified tests shall be performed by the manufacturer prior to shipment of the castings.

S1. Leak Tests on Pipe

S1.1 Sample lengths of pipe shall be checked for leaks by subjecting them to an internal hydrostatic pressure of 20 psi (138 kpa).

S1.2 Samples shall be taken at substantially regular intervals in the course of production so as to be representative of the material delivered, and shall consist of at least 20 % of the lengths ordered in each size. For every sample which leaks, four or more additional samples shall be taken. Each additional sample shall be representative of the same material as that of the defective sample.

S1.3 Pipes that leak shall be rejected.

Copyright ASTM International
Provided by IHS under license with ASTM
No reproduction or networking permitted without license from IHS
Not for Resale

APPENDIXES

(Nonmandatory Information)

X1. DIMENSIONS FOR INFORMATION ONLY

X1.1 The dimensions in Table X1.1 are given for use as convenient information on details of the hub barrel, and spigot, and are not requirements of this specification.

X2. PROCEDURES FOR SOIL SURVEY TESTS AND OBSERVATIONS AND THEIR INTERPRETATION TO DETERMINE WHETHER CAST IRON PIPE FOR WASTE WATER OR OTHER LIQUIDS REQUIRES POLYETHYLENE ENCASEMENT

X2.1 Scope

X2.1.1 In the appraisal of soil and other conditions that affect the corrosion rate of cast iron pipe, a minimum number of factors must be considered. They are outlined in the following sections. A method of evaluating and interpreting each factor and a method of weighting each factor to determine whether polyethylene encasement should be used are subsequently described.

X2.2 Earth Resistivity

X2.2.1 There are three methods for determining earth resistivity: four-pin, single-probe, and soil-box. In the field, a four-pin determination should be made with pins spaced at approximate pipe depth. This method yields an average of resistivity from the surface to a depth equal to pin spacing. However, results are sometimes difficult to interpret where dry top soil is underlaid with wetter soils and where soil types vary with depth. The Wenner configuration is used in conjunction with a resistivity meter. For all-around use, a unit with a capacity of up to 10^4 ohms is suggested because of its versatility in permitting both field and laboratory testing in most soils.

X2.2.2 Because of the aforementioned difficulty in interpretation, the same unit may be used with a single probe that

TABLE X1.1 Outside Dimensions of Hub, Barrel, and Spigot for Detailing, in.

NOTE—1 in. = 25.4 mm.

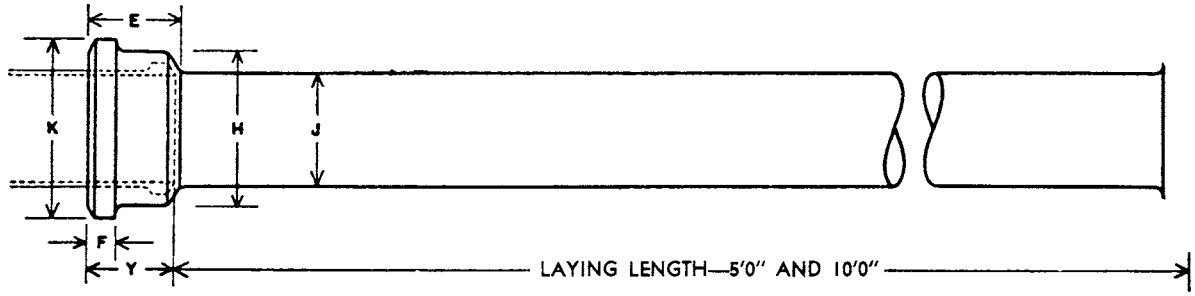

Size (nominal ID)	Extra-Heavy Pipe 'XH'					
	K max	*H* max	*J*	*F*	*Y*	*E*
2	4 1/8 [105]	3 5/8 [92]	2 3/8 [60]	3/4 [19]	2 1/2 [64]	2 3/4 [70]
3	5 3/8 [137]	4 15/16 [125]	3 1/2 [89]	13/16 [21]	2 3/4 [70]	3 1/4 [83]
4	6 3/8 [162]	5 15/16 [151]	4 1/2 [114]	7/8 [22]	3 [76]	3 1/2 [89]
5	7 3/8 [187]	6 15/16 [176]	5 1/2 [140]	7/8 [22]	3 [76]	3 1/2 [89]
6	8 3/8 [213]	7 15/16 [202]	6 1/2 [165]	7/8 [22]	3 [76]	3 1/2 [89]
8	11 1/16 [281]	10 7/16 [265]	8 5/8 [219]	1 3/16 [30]	3 1/2 [89]	4 1/8 [105]
10	13 5/16 [338]	12 11/16 [322]	10 3/4 [273]	1 3/16 [30]	3 1/2 [89]	4 1/8 [105]
12	15 7/16 [392]	14 13/16 [376]	12 3/4 [324]	1 7/16 [37]	4 1/4 [108]	5 [127]
15	18 13/16 [478]	18 3/16 [462]	15 7/8 [403]	1 7/16 [37]	4 1/4 [108]	5 [127]
Size (nominal ID)	Service-Pipe 'SV'					
	K max	*H* max	*J*	*F*	*Y*	*E*
2	3 15/16 [100]	3 3/8 [86]	2 1/4 [57]	3/4 [19]	2 1/2 [64]	2 3/4 [70]
3	5 [127]	4 1/2 [114]	3 1/4 [83]	13/16 [21]	2 3/4 [70]	3 1/4 [83]
4	6 [152]	5 1/2 [140]	4 1/4 [108]	7/8 [22]	3 [76]	3 1/2 [89]
5	7 [178]	6 1/2 [165]	5 1/4 [133]	7/8 [22]	3 [76]	3 1/2 [89]
6	8 [203]	7 1/2 [191]	6 1/4 [159]	7/8 [22]	3 [76]	3 1/2 [89]
8	10 1/2 [267]	9 7/8 [251]	8 3/8 [213]	1 3/16 [30]	3 1/2 [89]	4 1/8 [105]
10	12 13/16 [325]	12 3/16 [310]	10 1/2 [267]	1 3/16 [30]	3 1/2 [89]	4 1/8 [105]
12	14 15/16 [379]	14 5/16 [364]	12 1/2 [318]	1 7/16 [37]	4 1/4 [108]	5 [127]
15	18 5/16 [465]	17 5/8 [448]	15 5/8 [397]	1 7/16 [37]	4 1/4 [108]	5 [127]

Copyright ASTM International
Provided by IHS under license with ASTM
No reproduction or networking permitted without license from IHS
Not for Resale

yields resistivity at the point of the probe. A boring is made into the subsoil so that the probe may be pushed into the soil at the desired depth.

X2.2.3 Inasmuch as the soil may not be typically wet, a sample should be removed for resistivity determination, which may be accomplished with any one of several laboratory units that permits the introduction of water to saturation, thus simulating saturated field conditions. Each of these units is used in conjunction with a soil resistivity meter.

X2.2.4 Interpretation of resistivity results is extremely important. To base an opinion on a four-pin reading with dry top soil averaged with wetter subsoil would probably result in an inaccurate premise. Only by reading the resistivity in soil at pipe depth can an accurate interpretation be made. Also, every effort should be made to determine the local situation concerning ground-water table, presence of shallow ground water, and approximate percentage of time the soil is likely to be water saturated.

X2.2.5 With cast iron pipe, corrosion protection provided by products of corrosion is enhanced if there are dry periods during each year. Such periods seem to permit hardening or toughening of the corrosion scale or products, which then become impervious and serve as better insulators.

X2.2.6 In making field determinations of resistivity, temperature is important. The result obtained increases as temperature decreases. As the water in the soil approaches freezing, resistivity increases greatly, and, therefore, is not reliable. Field determinations under frozen soil conditions should be avoided. Reliable results under such conditions can be obtained only by collection of suitable subsoil samples for analysis under laboratory conditions at suitable temperature.

X2.2.7 *Interpretation of Resistivity*—Because of the wide variance in results obtained under the methods described, it is difficult specifically to interpret any single reading without knowing which method was used. It is proposed that interpretation be based on the lowest reading obtained with consideration being given to other conditions, such as normal moisture content of the soil in question. Because of the lack of exact correlation between experiences and resistivity, it is necessary to assign ranges of resistivity rather than specific numbers. In Table X2.1, points are assigned to various ranges of resistivity. These points, when considered along with points assigned to other soil characteristics, are meaningful.

TABLE X2.1 Soil-Test Evaluation[A]

Soil Characteristics	Points
Resistivity, ohm-cm (based on single probe at pipe depth or water-saturated soil-box):	
<1500	10
≥1500–1800	8
≥1800–2100	5
≥2100–2500	2
≥2500–3000	1
>3000	0
pH:	
0–2	5
2–4	3
4–6.5	0
6.5–7.5	0[B]
7.5–8.5	0
>8.5	3
Redox potential:	
> +100 mV	0
+50 to +100 mV	3.5
0 to +50 mV	4
Negative	5
Sulfides:	
Positive	3.5
Trace	2
Negative	0
Moisture:	
Poor drainage, continuously wet	2
Fair drainage, generally moist	1
Good drainage, generally dry	0

[A] Ten Points = corrosive to cast iron pipe; protection indicated.
[B] If sulfides are present and low or negative redox potential results are obtained, three points shall be given for this range.

X2.3 pH

X2.3.1 In the pH range from 0.0 to 4.0, the soil serves well as an electrolyte, and total acidity is important. In the pH range from 6.5 to 7.5, soil conditions are optimum for sulfate reduction. In the pH range from 8.5 to 14.0, soils are generally quite high in dissolved salts, yielding a low soil resistivity.

X2.3.2 In testing pH, glass and reference electrodes are pushed into the soil sample and a direct reading is made following suitable temperature setting on the instrument. Normal procedures are followed for standardization.

X2.4 Oxidation-Reduction (Redox) Potential

X2.4.1 The oxidation-reduction (redox) potential of a soil is significant because the most common sulfate-reducing bacteria can live only under anaerobic conditions. A redox potential greater than +100 mV shows the soil to be sufficiently aerated so that it will not support sulfate reducers. Potentials of zero to +100 mV may or may not indicate anaerobic conditions under which sulfate reducers thrive. This test also is accomplished using a portable pH meter, with platinum and reference electrodes inserted into the soil sample, which permits a reading of potential between the two electrodes. It should be noted that soil samples removed from a boring or excavation can undergo a change in redox potential on exposure to air. Such samples should be tested immediately on removal from the excavation. Experience has shown that heavy clays, muck, and organic soils are often anaerobic, and these soils should be regarded as potentially corrosive.

X2.5 Sulfides

X2.5.1 The sulfide determination is recommended because of its field expediency. A positive sulfide reaction reveals a potential problem due to sulfate-reducing bacteria. The sodium azide-iodine qualitative test is used. In this determination, a solution of 3 % sodium azide in a 0.1 *N* iodine solution is introduced into a test tube containing a sample of the soil in question. Sulfides catalyze the reaction between sodium azide and iodine, with the resulting evolution of nitrogen. If strong bubbling or foaming results, sulfides are present, and the presence of sulfate-reducing bacteria is indicated. If very slight bubbling is noted, sulfides are probably present in small concentration and the result is noted as a trace.

X2.6 Moisture Content

X2.6.1 Since prevailing moisture content is extremely important to all soil corrosion, every effort must be made to

Copyright ASTM International
Provided by IHS under license with ASTM
No reproduction or networking permitted without license from IHS
Not for Resale

determine this condition. It is not proposed, however, to determine specific moisture content of a soil sample, because of the probability that content varies throughout the year, but to question local authorities who are able to observe the conditions many times during the year. (Although mentioned in X2.2, this variability factor is being reiterated to emphasize the importance of notation.)

X2.7 Soil Description

X2.7.1 In each investigation, soil types should be completely described. The description should include color and physical characteristics, such as particle size, plasticity, friability, and uniformity. Observation and testing will reveal whether the soil is high in organic content; this should be noted. Experience has shown that in a given area, corrosivity may often be reflected in certain types and colors of soil. This information is valuable for future investigations or for determining the most likely soils to suspect. Soil uniformity is important because of the possible development of local corrosion cells due to the difference in potential between unlike soil types, both of which are in contact with the pipe. The same is true for uniformity of aeration. If one segment of soil contains more oxygen than a neighboring segment, a corrosion cell can develop from the difference in potential. This cell is known as a differential aeration cell.

X2.7.2 There are several basic types of soil that should be noted: sand, loam, silt, clay, and muck. Unusual soils, such as peat, or soils high in foreign material, should also be noted and described.

X2.8 Potential Stray Direct Current

X2.8.1 Any soil survey should include consideration of possible stray direct current with which the cast iron pipe installation might interfere. The widespread use of rectifiers and ground beds for cathodic protection of underground structures has resulted in a considerable threat from this source. Proximity of such cathodic protection systems should be noted. Among other potential sources of stray direct current are electric railways, industrial equipment, including welding and mine transportation equipment.

X2.9 Experience With Existing Installations

X2.9.1 The best information on corrosivity of soil with respect to cast iron pipe is the result of experience with these materials in the area in question. Every effort should be made to acquire such data by questioning local officials and, if possible, by actual observation of existing installations.

X2.10 Soil-Test Evaluation

X2.10.1 Using the soil-test procedures described in this specification, the following tests are considered in evaluating corrosivity of the soil: resistivity, pH, redox potential, sulfides, and moisture. For each of these tests, results are categorized according to their contribution to corrosivity. Points are assigned based on experience with gray and ductile cast iron pipe. When results of these five test observations are available, the assigned points are totaled. If the sum is equal to ten or more, the soil is corrosive to cast iron pipe, and protection against exterior corrosion should be provided. This system is limited to soil corrosion and does not include consideration of stray direct current. Table X2.1 lists points assigned to the various test results.

X2.11 General

X2.11.1 These notes deal only with cast iron pipe, the soil environment in which they will serve, and methods of determining the need for polyethylene encasement. When it is determined that a soil environment is corrosive to cast iron, Appendix X3 should be used.

X3. POLYETHYLENE ENCASEMENT FOR CAST IRON PIPE FOR WASTE WATER

X3.1 Scope

X3.1.1 This practice covers materials and installation procedures for polyethylene encasement to be applied to underground installations of cast iron pipe. It is also used for polyethylene encasement of fittings and other appurtenances to cast iron pipe systems.

X3.1.2 *This standard does not purport to address all of the safety concerns, if any, associated with its use. It is the responsibility of the user of this standard to establish appropriate safety and health practices and determine the applicability of regulatory limitations prior to use.*

X3.2 Referenced Documents

X3.2.1 *ASTM Standard:*[2]

D 1248 Specification for Polyethylene Plastics Extrusion Materials for Wire and Cable

X3.3 Terminology

X3.3.1 *Definitions*:

X3.3.1.1 *polyethylene encasement*—polyethylene material, in tube or sheet form, that is used to encase cast iron pipe.

X3.3.1.2 *securing overlap*—any one of various methods of holding polyethylene encasement in place at the point of overlap until backfilling operations are completed, such as with adhesive tape, plastic string, or tie straps or other suitable material.

X3.4 Requirements

X3.4.1 *Materials*:

X3.4.1.1 *Low-Density Polyethylene Film*—Low-density polyethylene film shall be manufactured of virgin polyethylene material conforming to the requirements of Specification D 1248 as shown in Table X3.1.

(1) Thickness—Low-density polyethylene film shall have a minimum nominal thickness of 0.008 in. (0.20 mm). The minus tolerance on thickness shall not exceed 10 % of the nominal thickness.

X3.4.1.2 *High-Density Cross-Laminated Polyethylene Film*

Copyright ASTM International
Provided by IHS under license with ASTM
No reproduction or networking permitted without license from IHS
Not for Resale

TABLE X3.1 Polyethylene Characteristics

Raw Material Used to Manufacture Polyethylene Encasement Material	
Type, class, grade, other characteristics in accordance with the latest revision of Specification D 1248	
Type	I
Class	A-natural color or C-black
Grade	E1
Flow rate, g/10 min	0.4 max
Dielectric strength, volume resistivity	10^{15}·cm^3, min
High-Density Cross-Laminated Polyethylene Encasement Material	
Tensile strength	1200 psi (8 MPa), min
Elongation	300 %, min
Dielectric strength	800 V/mil (31.5 V/μm) thickness, min

TABLE X3.2 Polyethylene Tube Sizes

Nominal Pipe Diameter, in.	Recommended Polyethylene Flat Tube Width, in. (cm)[A]
1½ , 2, 3	14 (35)
4	16 (41)
6	20 (51)
8	24 (61)
10	27 (69)
12	30 (76)
14	34 (86)
15	37 (94)

[A] For flat sheet polyethylene, see X3.5.2.3.

High-density cross-laminated polyethylene film shall be manufactured of virgin polyethylene material in accordance with the requirements of Specification D 1248 as shown in Table X3.2.

(1) Thickness—High-density cross-laminated polyethylene film shall have a minimum nominal thickness of 0.004 in. (0.10 mm). The minus tolerance on thickness shall not exceed 10 % of the nominal thickness.

X3.4.2 *Tube Size*—The tube size for each pipe diameter shall be as listed in Table X3.2.

X3.5 Installation

X3.5.1 *General*:

X3.5.1.1 The polyethylene encasement shall prevent contact between the pipe and the surrounding backfill and bedding material, but is not intended to be a completely airtight or watertight enclosure. All lumps of clay, mud, cinders, and the like that are on the pipe surface shall be removed prior to installation of the polyethylene encasement. During installation, care shall be exercised to prevent soil or embedment material from becoming entrapped between the pipe and the polyethylene.

X3.5.1.2 The polyethylene film shall be fitted to the contour of the pipe to affect a snug, but not tight, encasement with minimum space between the polyethylene and the pipe. Sufficient slack shall be provided in contouring to prevent stretching the polyethylene, bridging irregular surfaces such as hub-spigot interfaces, coupled joints, or fittings, and to prevent damage to the polyethylene due to backfilling operations. Overlaps and ends shall be secured by the use of adhesive tape, plastic string, plastic tie straps, or any other material capable of holding the polyethylene encasement in place until backfilling operations are completed.

X3.5.1.3 For installations below the water table or in areas subject to tidal actions, or both, it is recommended that tube-form polyethylene be used with both ends sealed as thoroughly as possible with adhesive tape or plastic tie straps at the joint overlap. It is also recommended that circumferential wraps of tape or plastic tie straps be placed at 2-ft (0.6-m) intervals along the barrel of the pipe to help minimize the space between the polyethylene and the pipe.

X3.5.2 *Pipe*—This appendix includes three different methods for the installation of polyethylene encasement. Methods A and B are for use with polyethylene tubes and Method C is for use with polyethylene sheets.

X3.5.2.1 *Method A (see Fig. X3.1)*:

(1) Cut the polyethylene tube to a length approximately 2 ft (0.6 m) longer than the length of the pipe section. Slip the tube around the pipe, centering it to provide a 1-ft (0.3-m) overlap on each adjacent pipe section, and bunching it accordion fashion lengthwise until it clears the pipe ends.

(2) Lower the pipe into the trench and make up the pipe joint with the preceding section of pipe. A shallow bell hole must be made at joints to facilitate installation of the polyethylene tube.

(3) After assembling the pipe joint, make the overlap of the polyethylene tube. Pull the bunched polyethylene from the preceding length of pipe, slip it over the end of the new length of pipe, and secure in place. Then slip the end of the polyethylene from the new pipe section over the end of the first wrap until it overlaps the joint at the end of the preceding length of pipe. Secure the overlap in place. Take up the slack width at the top of the pipe as shown in Fig. X3.2, to make a snug, but not tight, fit along the barrel of the pipe, securing the fold at quarter points.

(4) Repair any rips, punctures, or other damage to the polyethylene with adhesive tape or with a short length of polyethylene tube cut open, wrapped around the pipe, and secured in place. Confirm and adjust any necessary grade on the piping section. Proceed with installations of the next section of pipe in the same manner.

X3.5.2.2 Cut the polyethylene tube to a length approximately 1 ft (0.3 m) shorter than the length of the pipe section. Slip the tube around the pipe, centering it to provide 6 in. (150

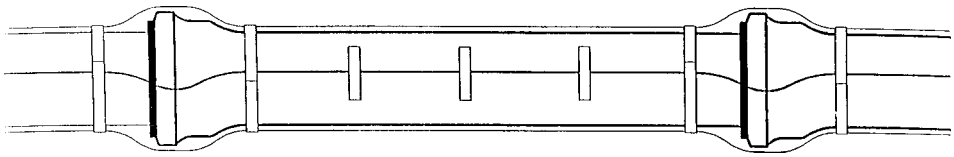

FIG. X3.1 Method A Hub Pipe

Copyright ASTM International
Provided by IHS under license with ASTM
No reproduction or networking permitted without license from IHS
Not for Resale

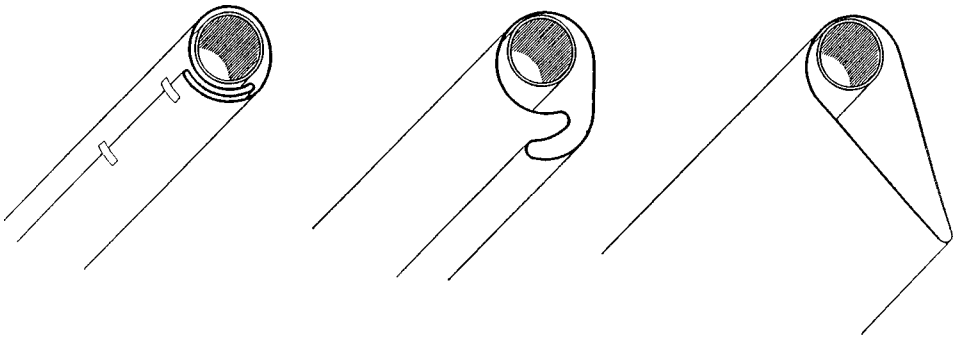

FIG. X3.2 Method A Slack Reduction Procedure

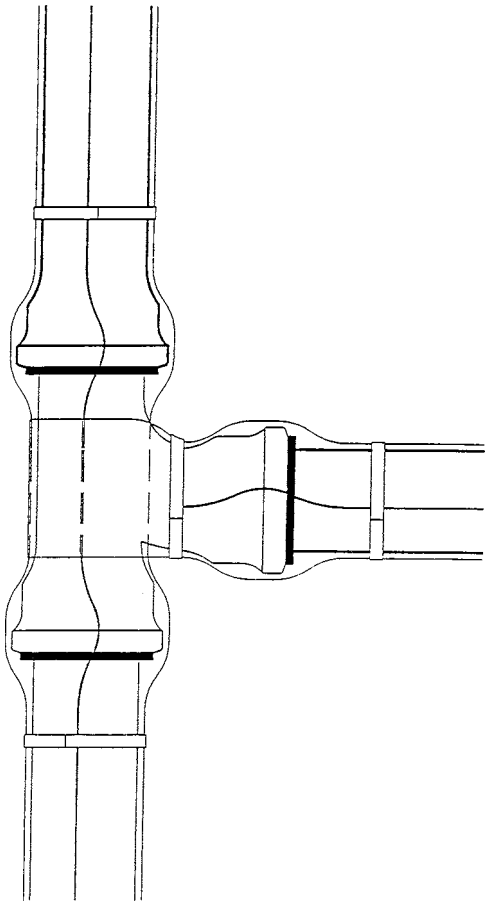

FIG. X3.3 Method A Installation on Odd-Shaped Appurtenances, Hub Pipe, and Fittings

TABLE X3.3 High-Density Cross-Laminated Polyethylene Characteristics

Raw Material Used to Manufacture Polyethylene Encasement Material	
Type, class, grade, other characteristics in accordance with the latest revision of Specification D 1248	
Type	111
Class	A-natural color, B-colors, or C-black
Grade	P33
Flow rate, g/10 min	0.4 to 0.5 g/10, min
Dielectric strength, volume resistivity	10^{15} ohm-cm, min
High-Density Cross-Laminated Polyethylene Encasement Material	
Tensile strength	5000 psi (34.6 MPa), min
Elongation	100 %, min
Dielectric strength	800 V/mil (31.5 V/μm) thickness, min

mm) of bare pipe at each end. Make the polyethylene snug, but not tight, as shown in Fig. X3.2; secure ends as described in X3.5.2.1.

(1) Before making up a joint, slip a 3-ft (0.9-m) length of polyethylene tube over the end of the preceding pipe section, bunching it accordion fashion lengthwise. After completing the joint, pull the 3-ft length of polyethylene previously installed on each adjacent section of pipe by at least 1 ft (0.3 m); make snug and secure each end as described in X3.5.2.1.

(2) Repair any rips, punctures, or other damage to the polyethylene as described in X3.5.2.1. Reaffirm grade on the piping, as required. Proceed with installation of the next section of pipe in the same manner.

X3.5.2.3 Flat sheet polyethylene shall have a minimum width twice the flat tube width shown in Table X3.3.

(1) Cut the polyethylene sheet to a length approximately 2 ft (0.6 m) longer than the length of pipe section. Center the cut length to provide a 1-ft (0.3-m) overlap on each adjacent pipe section, bunching it until it clears the pipe ends. Wrap the polyethylene around the pipe so that it overlaps circumferentially over the top quadrant of the pipe. Secure the cut edge of polyethylene sheet at approximately 3-ft (0.9-m) intervals along the pipe length.

(2) Lower the wrapped pipe into the trench and make up the pipe joint with the preceding section of pipe. A shallow hub hole must be made at joints to facilitate installation of the polyethylene. After completing the joint, make the overlap as described in X3.5.2.1.

(3) Repair any rips, punctures, or other damage to the polyethylene as described in X3.5.2.1. Confirm and adjust any necessary grade of the piping section. Proceed with installation of the next section of pipe in the same manner.

X3.5.3 *Pipe-Shaped Appurtenances*—Bends, reducers, offsets, and other pipe-shaped appurtenances shall be covered with polyethylene in the same manner as the pipe.

X3.5.4 *Odd-Shaped Appurtenances*—Wrap tees, crosses, and other odd-shaped pieces that cannot practically be wrapped in a tube, with a flat sheet or split length of polyethylene tube.

Copyright ASTM International
Provided by IHS under license with ASTM
No reproduction or networking permitted without license from IHS
Not for Resale

Pass the sheet under the appurtenance and bring up around the body. Make seams by bringing the edges together, folding over twice, and taping down (see Fig. X3.3). Handle slack width and overlaps at joints as described in X3.5.2.1. Tape polyethylene securely in place.

X3.5.5 *Repairs*—Repair any cuts, tears, punctures, or damage to polyethylene with adhesive tape or with a short length of polyethylene tube cut open, wrapped around the pipe covering the damaged area, and secured in place.

X3.5.6 *Junctions Between Wrapped and Unwrapped Pipe*—Where polyethylene wrapped pipe joins a pipe that is not wrapped, extend the polyethylene tube to cover the unwrapped pipe a distance of at least 3 ft (0.9 m). Secure the end with circumferential turns of tape.

X3.5.7 *Backfill for Polyethylene Wrapped Pipe*—Backfill material shall be the same as specified for pipe without polyethylene wrapping. Take special care to prevent damage to the polyethylene wrapping when placing backfill. Backfill material shall be free of cinders, refuse, frozen earth, boulders, rocks, stones, job site debris, or other material that could damage polyethylene.

ASTM International takes no position respecting the validity of any patent rights asserted in connection with any item mentioned in this standard. Users of this standard are expressly advised that determination of the validity of any such patent rights, and the risk of infringement of such rights, are entirely their own responsibility.

This standard is subject to revision at any time by the responsible technical committee and must be reviewed every five years and if not revised, either reapproved or withdrawn. Your comments are invited either for revision of this standard or for additional standards and should be addressed to ASTM International Headquarters. Your comments will receive careful consideration at a meeting of the responsible technical committee, which you may attend. If you feel that your comments have not received a fair hearing you should make your views known to the ASTM Committee on Standards, at the address shown below.

This standard is copyrighted by ASTM International, 100 Barr Harbor Drive, PO Box C700, West Conshohocken, PA 19428-2959, United States. Individual reprints (single or multiple copies) of this standard may be obtained by contacting ASTM at the above address or at 610-832-9585 (phone), 610-832-9555 (fax), or service@astm.org (e-mail); or through the ASTM website (www.astm.org).

Copyright ASTM International
Provided by IHS under license with ASTM
No reproduction or networking permitted without license from IHS
Not for Resale