Designation: A 716 – 03

Standard Specification for Ductile Iron Culvert Pipe[1]

This standard is issued under the fixed designation A 716; the number immediately following the designation indicates the year of original adoption or, in the case of revision, the year of last revision. A number in parentheses indicates the year of last reapproval. A superscript epsilon (ε) indicates an editorial change since the last revision or reapproval.

1. Scope

1.1 This specification covers 14 to 64-in. ductile-iron culvert pipe centrifugally cast.

1.2 The values stated in inch-pound units are to be regarded as the standard. The values given in parentheses are for information only.

1.3 The following safety hazards caveat pertains only to the test methods portions, Sections 6 and 7, of this specification: *This standard does not purport to address all of the safety concerns, if any, associated with its use. It is the responsibility of the user of this standard to establish appropriate safety and health practices and determine the applicability of regulatory limitations prior to use.*

2. Referenced Documents

2.1 *ASTM Standards:* [2]

E 8 Test Methods for Tension Testing of Metallic Materials

E 23 Test Methods for Notched Bar Impact Testing of Metallic Materials

2.2 *ANSI/AWWA Standards:*

C 150/A21.50 Thickness Design of Ductile-Iron Pipe[3]

C 151/A21.51 Ductile-Iron Pipe Centrifugally Cast, for Water[3]

2.3 *AASHTO Standard:*

AASHTO T-99 Moisture Density Relations of Soils Using a 5.5-lb (2.5-kg) Rammer 12-in. (305-mm) Drop[4]

3. General Requirements

3.1 The pipe shall be manufactured of ductile iron that meets the requirements of Sections 6 and 7. See Table 1 for pipe thicknesses and weights; see also Fig. 1.

TABLE 1 Standard Wall Thickness[A] and Weight of Push-On Joint Ductile-Iron Culvert Pipe

Nominal Diam., in.	Pressure Class	Nominal Thickness, in. (mm)	Maximum Depth of Cover, Ft. (m)	18-ft (5.5mm) Laying Length, Weight per, Length, lb (kg)	20-ft (6.1 mm) Laying Length, Weight per, Length, lb (kg)
14	250	0.28 (7.1)	41 (12.5)	770 (349)	855 (388)
16	250	0.30 (7.6)	41 (12.5)	940 (426)	1040 (472)
18	250	0.31 (7.9)	40 (12.2)	1090 (494)	1205 (547)
20	250	0.33 (8.4)	40 (12.2)	1290 (585)	1425 (646)
24	200	0.33 (8.4)	37 (11.3)	1550 (703)	1710 (776)
30	150	0.34 (8.6)	33 (10.1)	2000 (907)	2210 (1002)
36	150	0.38 (9.7)	33 (10.1)	2675 (1213)	2955 (1340)
42	150	0.41 (10.4)	32 (9.8)	3415 (1549)	3765 (1708)
48	150	0.46 (12.4)	33 (10.1)		4805 (2180)
54	150	0.51 (13.0)	33 (10.1)		6035 (2737)
60	150	0.54 (13.7)	33 (10.1)		6930 (3143)
64	150	0.56 (14.2)	33 (10.1)		7680 (3484)

[A] Nominal thickness is based on the minimum Pressure Class ductile iron pipe available installed in Type 5 trench condition in accordance with ANSI/AWWA C150/A21.50, as shown in Fig. 1, with a maximum ring deflection of 5 % and maximum ring stress of 48,000 psi (331 MPa). Wall thickness of pipe to serve at other depths of cover may be calculated in accordance with ANSI/AWWA C150/A21.50, allowing 5 % maximum ring deflection.

3.2 The pipe shall be provided with suitable joints, such as push-on or other types of joints that prevent lateral displacement. Plain-end pipe for use with suitable couplings may be furnished.

3.3 Unless otherwise specified, pipe shall have a nominal length of 18 or 20 ft (5.5 or 6.1 m). A maximum of 20 % of the total number of pipe of each size specified in an order may be furnished as much as 24 in. (610 mm) shorter than the nominal laying length, and an additional 10 % may be furnished as much as in 6 in. (152 mm) shorter than the nominal laying length.

4. Tolerances or Permitted Variations

4.1 *Dimensions*—The spigot end, bell, and socket of the pipe and the accessories shall be gaged with suitable gages at sufficiently frequent intervals to assure that the dimensions comply with the requirements of this specification. The smallest inside diameter (ID) of the sockets and the outside diameter (OD) of the spigot ends shall be tested with circular gages. Other socket dimensions shall be gauged as may be appropriate.

[1] This specification is under the jurisdiction of ASTM Committee A04 on Iron Castings and is the direct responsibility of Subcommittee A04.12 on Pipes and Tubes.

Current edition approved Dec. 1, 2003. Published January 2004. Originally approved in 1975. Last previous edition approved in 1999 as A 716 – 99.

[2] For referenced ASTM standards, visit the ASTM website, www.astm.org, or contact ASTM Customer Service at service@astm.org. For *Annual Book of ASTM Standards* volume information, refer to the standard's Document Summary page on the ASTM website.

[3] Available from American National Standards Institute, 25 West 43rd Street, 4th Floor, New York, NY 10036.

[4] Available from the American Association of State Highway and Transportation Officials, 444 N. Capitol, Washington, DC 20001.

Copyright © ASTM International, 100 Barr Harbor Drive, PO Box C700, West Conshohocken, PA 19428-2959, United States.

Copyright ASTM International
Provided by IHS under license with ASTM
No reproduction or networking permitted without license from IHS
Not for Resale

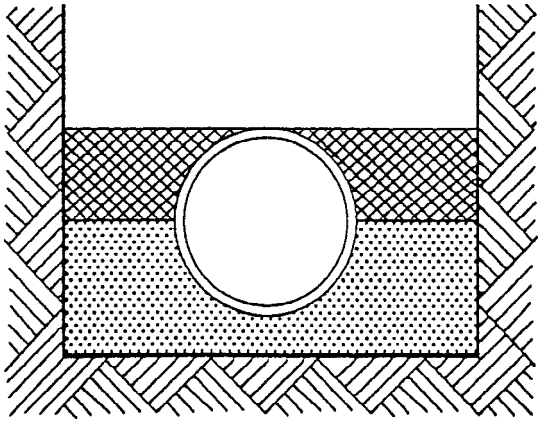

NOTE 1—Pipe is bedded to its centerline in compacted granular material with a minimum of 4 in. (102 mm) under the pipe. Compacted granular or select[A] material is used to the top of the pipe. (Material is compacted to approximately 90 % Standard Proctor in accordance with AASHTO Standard T-99.)

[A] Loose soil or select material is defined as native soil excavated from the trench, free of rocks, foreign material, and frozen earth.

FIG. 1 Type 5 Trench

4.2 *Thickness*—Minus thickness tolerances of pipe shall not exceed those shown below:

Nominal Size, in.	Minus Tolerance, in. (mm)
14 to 42	0.07 (1.8)
48	0.08 (2.0)
54 to 64	0.09 (2.3)

NOTE 1—An additional minus tolerance of 0.02 in (0.05 mm) shall be permitted along the barrel of the pipe for a distance not to exceed 12 in. (305 mm).

4.3 *Weight*—The weight of any single pipe shall not be less than the tabulated weight by more than 5 %.

5. Coating

5.1 All pipe shall be coated inside and outside with an asphaltic material approximately 1 mil (0.025 mm) thick. The finished coating shall be continuous and smooth, neither brittle when cold, nor sticky when exposed to the sun, and shall be strongly adherent to the pipe.

6. Acceptance Tests

6.1 The standard acceptance tests for the physical characteristics of the pipe shall be as follows:

6.2 *Tension Test*—Unless otherwise specified by the purchaser, a tension test specimen shall be cut longitudinally or circumferentially from the midsection of the pipe wall. In case of dispute, the specimen shall be cut longitudinally. This specimen shall be machined and tested in accordance with Fig. 2 and Test Methods E 8. The yield strength shall be determined by the 0.2 % offset, halt-of-pointer, or extension-under-load methods. If check tests are to be made, the 0.2 % offset method shall be used. All specimens shall be tested at room temperature 70 ± 10°F (21 ± 6°C).

6.2.1 *Acceptable Values*—The acceptance values for test specimens shall be as follows:

Grade of iron	60-42-10
Minimum tensile strength, psi (MPa)	60 000 (413.7)
Minimum yield strength, psi (MPa)	42 000 (289.6)
Minimum elongation, %	10

6.3 *Charpy Impact Test*—Tests shall be made in accordance with Test Methods E 23, except that dimensions of the specimens shall be 0.500 in. (12.70 mm) by full thickness of pipe wall. Unless otherwise specified by the purchaser, the Charpy notched impact test specimen shall be in accordance with Fig. 3, except that it may be cut circumferentially. In case of dispute, the specimen shall be cut in accordance with Fig. 3. If the pipe wall thickness exceeds 0.40 in. (10.2 mm), the Charpy impact specimen may be machined to a nominal thickness of 0.40 in. (10.2 mm). In all tests, impact values are to be corrected to a standard wall thickness, t_s = 0.40 in. (10.2 mm), by calculation as follows:

$$\text{Impact value (corrected)} = \frac{t_s}{t} \times \text{impact value (actual)}$$

where:

t = the thickness of the specimen, in. (mm).

The Charpy impact test machine anvil shall not be moved to compensate for the variation of cross-section dimensions of the test specimen.

6.3.1 *Acceptance Value*—The corrected acceptance value for notched impact test specimens shall be a minimum of 7 ft·lbf (9.49 J) for tests conducted at 70 ± 10°F (21 ± 6°C).

6.4 *Sampling*—At least one tension specimen shall be taken during each casting period of approximately 3 h. At least one 70 ± 10°F (21 ± 6°C) Charpy impact specimen shall be taken during each operating hour. Specimens shall be selected to properly represent extremes of pipe diameters and wall thicknesses.

7. Additional Control Tests by Manufacturer

7.1 An additional low-temperature impact test shall be made from at least 10 % of the sample coupons taken for the required 70 ± 10°F (21 ± 6°C) Charpy impact test specified in 6.4 to check compliance with a minimum corrected value of 3 ft·lbf (4.07 J) for tests conducted at −40°F ± 2°F (−40°C ± 1°C). Test specimens shall be prepared and tested in accordance with 6.3.

7.2 In addition, the manufacturer shall conduct such other tests as may be necessary to ensure compliance with this specification.

8. Additional Tests Required by Purchaser

8.1 When tests other than those required in this specification are required by the purchaser, such tests shall be specified in the purchaser's specifications.

9. Inspection and Certification by Manufacturer

9.1 The manufacturer shall establish the necessary quality-control and inspection practice to ensure compliance with this specification.

9.2 The manufacturer shall, if required by the purchaser's specifications, furnish a sworn statement that the inspection and all of the specified tests have been made and that all results thereof comply with the requirements of this specification.

9.3 All pipes shall be without defects that could impair service. Repairing of defects by welding or other methods shall

--`,,`,,`-`-`,,`,,`,`,,`---

Copyright ASTM International
Provided by IHS under license with ASTM
No reproduction or networking permitted without license from IHS
Not for Resale

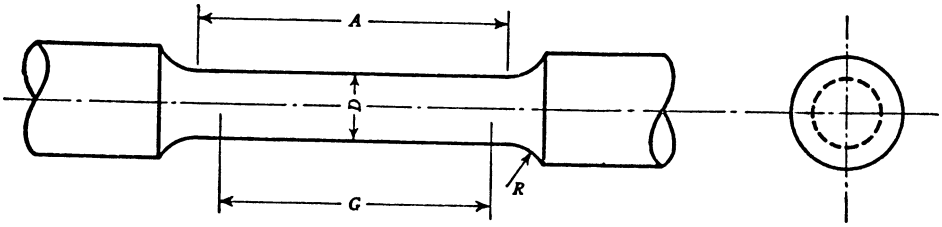

NOTE 1—The reduced section (*A*) may have a gradual taper from the ends toward the center with the ends not more than 0.005 in. (0.13 mm) larger in diameter than the center on the standard specimen and not more than 0.003 in. (0.08 mm) larger in diameter than the center on the small size specimens.

NOTE 2—If desired, on the small size specimens the length of the reduced section may be increased to accommodate an extensometer. However, reference marks for the measurement of elongation should nevertheless be spaced at the indicated gage length (*G*).

NOTE 3—The gage length and fillets shall be as shown, but the ends may be of any form to fit the holders of the testing machine in such a way that the load shall be axial. If the ends are to be held in grips it is desirable, if possible to make the length of the grip section great enough to allow the specimen to extend into the grips a distance equal to two thirds or more of the length of the grips.

Dimension	Standard Specimen	Small-Size Specimens Proportional to Standard			
	0.50-in (12.7-mm) Round	0.350-in. (8.89-mm) Round	0.250-in. (6.35-mm) Round	0.175-in. (4.45-mm) Round	0.125-in. (3.18-mm) Round
G	2.000 ± 0.005 (50.80 ± 0.13)	1.400 ± 0.005 (35.56 ± 0.13)	1.000 ± 0.005 (25.40 ± 0.13)	0.700 ± 0.005 (17.78± 0.13)	0.500 ± 0.005 (12.70 ± 0.13)
D	0.500 ± 0.010 (12.70 ± 0.25)	0.350 ± 0.007 (8.89 ± 0.18)	0.250 ± 0.005 (6.35 ± 0.13)	0.175 ± 0.005 (4.44 ± 0.13)	0.125 ± 0.005 (3.18 ± 0.13)
R, min	⅜ (9.5)	¼ (6.4)	3/16 (4.8)	3/32 (2.4)	3/32 (2.4)
A, min	2¼ (57.2)	1¾ (44.4)	1¼ (31.8)	¾ (19)	⅝ (15.9)
T [A]	0.71 and greater (18.0)	0.50 to 0.70 (12.7 to 17.8)	0.35 ± 0.49 (8.9 to 12.4)	0.25 to 0.34 (6.4 ± 8.6)	0.18 to 0.24 (4.6 to 6.1)

[A] Thickness of the section from the wall of the pipe from which the tension specimen is to be machined.

FIG. 2 Tension-Test Specimen

not be allowed if such repairs could adversely affect the serviceability of the pipe or its capability to meet strength requirements of this specification.

10. Inspection by Purchaser

10.1 If the purchaser desires to inspect pipe at the manufacturer's plant, the purchaser shall so state in the purchaser's specifications and describe the conditions (such as time and the extent of inspection) under which the inspection shall be made.

10.2 The purchaser's representative shall have free access to those areas of the manufacturer's plant that are necessary to determine compliance with this standard specification. The manufacturer shall make available for the use of the purchaser's representative such gages as are necessary for inspection. The manufacturer shall provide the purchaser's representative with assistance as necessary for handling of pipe.

11. Delivery and Acceptance

11.1 All pipe and accessories shall comply with this standard specification. Pipe and accessories not complying with this standard specification shall be replaced by the manufacturer at the agreed point of delivery. The manufacturer shall not be liable for shortages or damaged pipe after acceptance at the agreed point of delivery, except as recorded on the delivery receipt or similar document by the carrier's agent.

12. Foundry Records

12.1 The results of the acceptance tests (Section 6) and low-temperature impact tests (Section 7) shall be recorded and retained for 1 year, and shall be available to the purchaser at the foundry. Written transcripts shall be furnished, if required by the purchaser's specification.

13. Defective Specimens and Retests

13.1 When any mechanical-test specimen shows defective machining or lack of continuity of metal, it shall be discarded and replaced by another specimen. When any sound test specimen fails to meet the specified mechanical property requirements, the lot of pipe from which the specimen was obtained shall be separated from acceptable pipe. The lot may be either retested, re-heat treated as necessary and retested, or rejected. A retest shall be made on two additional sound test specimens taken from the same lot as the specimen that failed. Pipe that are re-heat treated or retested, or both, shall meet the requirements of 4.1, 6, and 7.

14. Rejection of Pipe

14.1 If the results of any physical acceptance test fail to meet the requirements of Sections 6, 7, or 13, all pipe cast in the same period shall be rejected, except as provided in Section 15.

15. Determining Rejection

15.1 The manufacturer may determine the amount of pipe to be rejected by making similar additional tests of pipe, of the same size as the rejected pipe, until the rejected lot is bracketed, in order of manufacture, by an acceptable test at each end of the interval in question. When pipe of one size is rejected from a casting period, the acceptability of pipe of

Copyright ASTM International
Provided by IHS under license with ASTM
No reproduction or networking permitted without license from IHS
Not for Resale

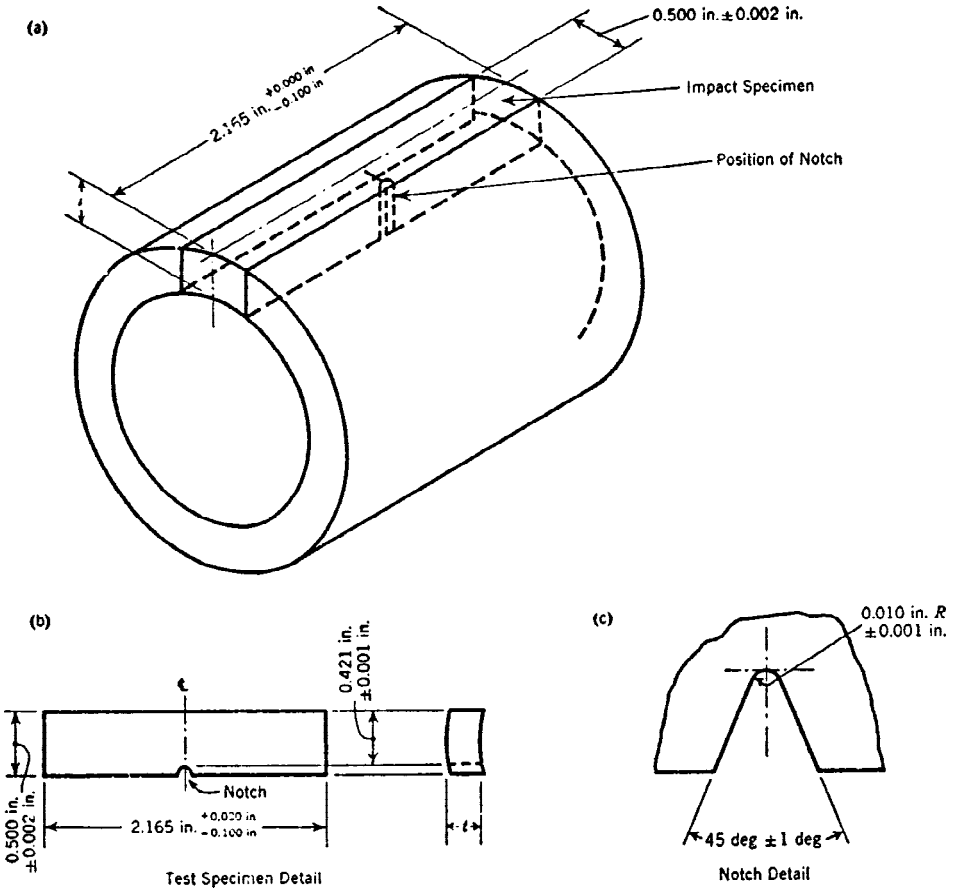

NOTE 1—t = pipe-wall thickness.

in.	mm	in.	mm
−0.100	−2.54	0.100	2.54
+0.000	+0.00	0.421	10.69
0.001	0.03	0.500	12.70
0.002	0.05	2.165	54.99
0.010	0.25		

FIG. 3 Impact Test Specimen

different sizes from that same period may be established by developing the acceptance tests for these sizes as specified in Section 6.

16. Marking Pipe

16.1 The weight, class, or nominal thickness, and casting period shall be shown on each pipe. The manufacturer's mark, the country where cast, the year in which the pipe was produced, and the letter "DI" or "DUCTILE" shall be cast or metal stamped on the pipe and letters and number shall be not less than ½ in. (13 mm) in height. When required in the purchaser's specifications, initials not exceeding four in number shall be cast or stamped on the pipe. All required markings shall be clear and legible, and all cast or metal stamped marks shall be on or near the bell.

17. Weighing the Pipe

17.1 Each pipe shall be weighed and the weight shown on the outside or inside of the bell or spigot end.

18. Keywords

18.1 ductile iron culvert pipe; elongation; mechanical properties; tensile strength; yield strength

Copyright ASTM International
Provided by IHS under license with ASTM
No reproduction or networking permitted without license from IHS
Not for Resale

ASTM International takes no position respecting the validity of any patent rights asserted in connection with any item mentioned in this standard. Users of this standard are expressly advised that determination of the validity of any such patent rights, and the risk of infringement of such rights, are entirely their own responsibility.

This standard is subject to revision at any time by the responsible technical committee and must be reviewed every five years and if not revised, either reapproved or withdrawn. Your comments are invited either for revision of this standard or for additional standards and should be addressed to ASTM International Headquarters. Your comments will receive careful consideration at a meeting of the responsible technical committee, which you may attend. If you feel that your comments have not received a fair hearing you should make your views known to the ASTM Committee on Standards, at the address shown below.

This standard is copyrighted by ASTM International, 100 Barr Harbor Drive, PO Box C700, West Conshohocken, PA 19428-2959, United States. Individual reprints (single or multiple copies) of this standard may be obtained by contacting ASTM at the above address or at 610-832-9585 (phone), 610-832-9555 (fax), or service@astm.org (e-mail); or through the ASTM website (www.astm.org).

Copyright ASTM International
Provided by IHS under license with ASTM
No reproduction or networking permitted without license from IHS
Not for Resale