Designation: A 700 – 05

# Standard Practices for Packaging, Marking, and Loading Methods for Steel Products for Shipment[1]

This standard is issued under the fixed designation A 700; the number immediately following the designation indicates the year of original adoption or, in the case of revision, the year of last revision. A number in parentheses indicates the year of last reapproval. A superscript epsilon (ε) indicates an editorial change since the last revision or reapproval.

*This standard has been approved for use by agencies of the Department of Defense.*

## 1. Scope*

1.1 These practices cover the packaging, marking, and loading of steel products for shipment. Assuming proper handling in transit, the practices are intended to deliver the products to their destination in good condition. It is also intended that these recommendations be used as guides for attaining uniformity, simplicity, adequacy, and economy in the shipment of steel products.

1.2 These practices cover semi-finished steel products, bars, bar-size shapes and sheet piling, rods, wire and wire products, tubular products, plates, sheets, and strips, tin mill products, and castings. A glossary of packaging, marking, and loading terms is also included.

1.3 The practices are presented in the following sequence:


| | Section |
|---|---|
| General Provisions | 4 |
| General | 4.1 |
| Railcar Loading | 4.2 |
| Truck Loading | 4.3 |
| Barge Loading | 4.4 |
| Air Shipment | 4.5 |
| Packaging Materials | 4.6 |
| Package Identification | 4.7 |
| Weight and Count | 4.8 |
| Packaging Lists or Tally | 4.9 |
| Loss or Damage | 4.10 |
| Semifinished Steel Products | 5 |
| Hot-Rolled Bars and Bar-Size Shapes | 6 |
| Cold-Finished Bars | 7 |
| Structural Shapes and Steel Sheet Piling | 8 |
| Rods, Wire, and Wire Products | 9 |
| Tubular Products | 10 |
| Plates | 11 |
| Sheets and Strip | 12 |
| Tin Mill Products | 13 |
| Castings | 14 |


1.4 The values stated in inch-pound units are to be regarded as standard. The values given in parentheses are mathematical conversions to SI units that are provided for information only and are not considered standard.

1.5 *This standard does not purport to address all of the safety concerns, if any, associated with its use. It is the responsibility of the user of this standard to establish appropriate safety and health practices and determine the applicability of regulatory limitations prior to use.*

## 2. Referenced Documents

2.1 *ASTM Standards:* [2]

D 245 Practice for Establishing Structural Grades and Related Allowable Properties for Visually Graded Lumber

D 774 Test Method for Bursting Strength of Paper

D 828 Test Methods for Tensile Breaking Strength of Paper and Paperboard

D 2555 Test Methods for Establishing Clear-Wood Strength Values

D 3953 Specification for Strapping, Flat Steel and Seals

2.2 *Association of American Railroads:*[3]

Rules Governing the Loading of Commodities on Open Top Cars

Pamphlet 23 —The Rules Governing the Loading of Steel Products in Closed Cars and Protection of Equipment

2.3 *American Society of Agricultural Engineers:*[4]

ASAE Standard S 229, Baling Wire for Automatic Balers

## 3. Terminology

3.1 *Definitions of Terms Specific to This Standard:*

3.1.1 The following glossary defines packaging, marking, and loading terms:

3.1.2 *AAR*—Association of American Railroads.

3.1.3 *"A" end of car*—arbitrary definition used to describe the end of a freight car opposite the end on which the manual brake control is located. In the event there is a manual brake control on both ends, the ends are designated by stenciling the letters "A" and "B" respectively on both sides near the ends.

[1] These practices are under the jurisdiction of ASTM Committee A01 on Steel, Stainless Steel, U.S. Government Requirements for Steel Mill, and Related Alloys and are the direct responsibility of Subcommittee A01.94 on Government Specifications.

Current edition approved Sept. 1, 2005. Published September 2005. Originally approved in 1994. Last previous edition approved in 1999 as A 700 – 99$^{\epsilon 1}$.

[2] For referenced ASTM standards, visit the ASTM website, www.astm.org, or contact ASTM Customer Service at service@astm.org. For *Annual Book of ASTM Standards* volume information, refer to the standard's Document Summary page on the ASTM website.

[3] Available from Association of American Railroads, American Railroads Bldg., 1920 L St., NW, Washington, DC 20036.

[4] Available from American Society of Agricultural Engineers, 2950 Niles Rd., St. Joseph, MI 49085.

***A Summary of Changes section appears at the end of this standard.**

Copyright © ASTM International, 100 Barr Harbor Drive, PO Box C700, West Conshohocken, PA 19428-2959, United States.



Copyright ASTM International
Reproduced by IHS under license with ASTM
No reproduction or networking permitted without license from IHS
Copyright by ASTM Int'l (all rights reserved);
Reproduction authorized per License Agreement with Kathe Hooper (ASTMIHS Account); Mon Oct 3 12:05:46 EDT 2005
Not for Resale

3.1.4 *air tool*—tool operated by air pressure used for strap tensioning, sealing, nailing, and so forth

3.1.5 *anchor plate*—a plate that is nailed to side or floor of car used to attach steel strapping for load securement.

3.1.6 *anchor tie*—a coil eye-tie that is applied in a special manner to resistant movement on bar or rod coils. A typical method is to wrap the tie around several strands, then around the complete coil.

3.1.7 *anti-skid plate*—a device with sharp projections placed under the package to retard shifting of the load in transit.

3.1.8 *"A" rack*—a rack built in the form of the letter "A" for storing steel bars.

3.1.9 *asphalt-laminated paper*—paper used for packaging or shrouding, or both, composed of two or more sheets of paper bonded by asphalt.

3.1.10 *back-up cleat*—wood strip nailed to floor or side of car to strengthen or prevent displacement of the primary blocking.

3.1.11 *banding, band*—See *strapping.*

3.1.12 *band protector*—material used under package or load ties to protect product from damage and to prevent shearing of the package ties.

3.1.13 *bare*—any product that has not been protectively wrapped or covered when packaged.

3.1.14 *barrel, slack*—wooden barrel, not watertight by construction, used for solid materials.

3.1.15 *basis weight*—standard weight accepted by trade customs, based upon standard size for the given class of material. The weights of all other standard sizes are proportionate to the size and weight established for the given class of material.

3.1.16 *batten strips*—strips of wood used to protect machined surface or projections on castings from damage by the securing tie or contact with other objects. Their location is optional but must be so located to afford maximum protection.

3.1.17 *bearing pieces*—supports beneath but not secured to lift, package, or load.

3.1.18 *belt rails*—perforated angle or channel, running length-wise at various levels along wall of vehicle, used to affix load-securement devices such as cross members or bulkheads.

3.1.19 *"B" end of car*—the end of a freight car on which the manual brake control is located. In the event there is a manual brake control on both ends, the ends are designated by stenciling the letters "A" and "B" respectively, on both sides near the ends.

3.1.20 *beveled*—usually refers to a packaging or loading member with ends or edges cut at an angle other than 90 deg.

3.1.21 *binder*—a clamping device used to secure chains or cables.

3.1.22 *blocking*—material used to prevent or control movement of the unit or load or to facilitate handling.

3.1.23 *box*—a fully enclosed rigid container having length, width, and depth.

3.1.24 *box car*—a freight car completely enclosed by ends, sides, and roof equipped with doors to permit entry of loading equipment and lading.

3.1.25 *bracing*—material used to make the unit or load firm or rigid.

3.1.26 *brand*—producer's or consumer's identification marks.

3.1.27 *bulkhead*—fabricated and affixed barrier used to prevent lengthwise movements of a unit or load.

3.1.28 *bulkhead, movable*—bulkhead, part of railroad equipment, that is capable of being adjusted for load securement.

3.1.29 *bumper block*—material affixed to ends or sides of a unit or load to prevent damaging contact.

3.1.30 *bundle*— two or more pieces secured together.

3.1.31 *cleat*—a piece of material, such as wood or metal, attached to a structural body to strengthen, secure, or furnish a grip.

3.1.32 *clinched tie*—a coil eye-tie (round wire) that is tensioned after manual twisting. Normally done with special twisting tool or a bar.

3.1.33 *coil*—a continuous length of wire, bar, rod, strip, sheet, and so forth, cylindrically wound.

3.1.34 *coil car*—railroad car specially equipped for the transportation of sheet or strip coils.

3.1.35 *coil carrier*—a carrying and dispensing device primarily for wire coils.

3.1.36 *coil group*—two or more coils secured into a unit that can be handled as a single package.

3.1.37 *coil skid*—See (coil) *platform.*

3.1.38 *core*—a cylinder on which coiled products are wound and which remains in the inside diameter after winding.

3.1.39 *corrosion inhibitor*—any material used by the steel industry to inhibit corrosion. This includes chemicals, oils, treated packaging materials, and so forth.

3.1.40 *corrugated box*—shipping container made of corrugated fiber board.

3.1.41 *covered*—top, sides, and ends of package covered with paper under the ties.

3.1.42 *crate*—a container of open-frame construction.

3.1.43 *cross member "DF"*—a wood or metal support of rated strength that is attached to the belt rails of a vehicle and that may be used with or without a bulkhead to contain the load.

3.1.44 *cushion underframe*—a device affixed to the underframe of a railroad car to absorb longitudinal shocks caused by impacts.

3.1.45 *damage-free box car*—box car equipped with load securement.

3.1.46 *deck*—top surface of a platform or pallet.

3.1.47 *desiccant*—chemical used to absorb moisture.

3.1.48 *double deck*—two-level stacking.

3.1.49 *double-door box car*—box car equipped with two doors on each side. The doors may be staggered or directly opposite.

3.1.50 *drums*—fiber or metal cylindrical containers.

3.1.51 *eye (of coil)*—center opening of coil.

3.1.52 *eye vertical*—placement of coil with eye of coil vertical.

3.1.53 *filler block*—wood block used to fill voids when necessary for effective packaging or loading.



Copyright ASTM International
Reproduced by IHS under license with ASTM
No reproduction or networking permitted without license from IHS
Copyright by ASTM Int'l (all rights reserved);
Reproduction authorized per License Agreement with Kathe Hooper (ASTMIHS Account); Mon Oct 3 12:05:46 EDT 2005
Not for Resale

3.1.54 *fixed bulkhead*—immovable bulkhead permanently attached to car.

3.1.55 *floating load*—a rail load that is permitted to move in a longitudinal direction so that impact shocks are dissipated through movement of the load.

3.1.56 *gondola*—a freight car with sides and ends but without a top covering. May be equipped with high or low sides, drop or fixed ends, solid or drop bottoms, and is used for shipment of any commodity not requiring protection from the weather.

3.1.57 *gondola, covered*—a gondola with a movable or removable cover. Used for the shipment of any commodity that requires protection from the weather.

3.1.58 *gondola, drop-end*—a gondola with ends in the form of doors which can be lowered to facilitate loading and unloading, or for transporting long material that extends beyond the ends of the car.

3.1.59 *gondola, fixed-end*—a gondola with fixed ends and sides but without top covering.

3.1.60 *gondola, low-side*—a gondola with car sides under 45 in. (1.14 m).

3.1.61 *greaseproof paper*—paper treated to inhibit absorption of grease or oil.

3.1.62 *gross weight*—See definitions under *weights.*

3.1.63 *guide strips*—lumber secured to car floor to prevent lateral movement of lading.

3.1.64 *hand bundle*—a secured or unsecured unit that can be handled manually.

3.1.65 *headerboard*—bulkhead on the front end of a trailer to protect the cab from shifting of the load.

3.1.66 *ID*—inside diameter or inside dimension.

3.1.67 *idler car*— flat car or drop-end gondola placed adjacent to a car carrying an overhanging load.

3.1.68 *insert*—a support used in the inside diameter of a coil placed in position after the coil is formed to prevent collapse.

3.1.69 *integral cover*—a retractable permanently affixed cover on a gondola or flat car.

3.1.70 *interleaving*—placing paper between sheets in a lift or between coil wraps for protection against abrasion.

3.1.71 *interlocking*—procedure for stacking small channels and shapes.

3.1.72 *joint strength*—the tension measured in pounds that a tied joint can withstand before the joint slips or breaks.

3.1.73 *keg*—a small barrel.

3.1.74 *knee brace*—a triangular brace against the load consisting of a vertical and a diagonal member used to prevent shifting of the load. It is frequently supplemented with cleats.

3.1.75 *kraft paper*—wood pulp paper made by the sulfate process.

3.1.76 *label*—paper or other material affixed to the package containing identification of product, consignee, producer, and so forth

3.1.77 *lagging*—narrow strips of protective material, usually wood, spaced at intervals around a cylindrical object as protection against mechanical damage.

3.1.78 *laminant*—the bonding agent used to combine two or more sheeted materials such as films, foils, paper, and so forth. Often selected to improve barrier qualities of the laminated product.

3.1.79 *lift*—a unit prepared for handling by mechanical equipment. It may be either secured or loose.

3.1.80 *lift truck*—a wheeled device used to lift and to transport material. May be a fork lift, ram lift, platform, or straddle truck.

3.1.81 *light weight*—See definition under *weights*.

3.1.82 *load limit*—the maximum load in pounds that the conveyance is designed to carry.

3.1.83 *loose*—often used to mean shipping unsecured.

3.1.84 *LTL*—less truck load; quantities shipped in amounts less than truck load.

3.1.85 *marking*—term applied to any of several methods of identifying steel products such as stenciling, stamping, free handwriting, printing, or bar coding.

3.1.86 *metal package*—a paper-wrapped package enclosed with metal intended for overseas shipment.

3.1.87 *multiple lift*—usually refers to unsecured individual lifts of sheets combined one on top of another to make a package.

3.1.88 *MVT*—moisture vapor transmission.

3.1.89 *nailable steel floor*—steel floor designed with slots or perforations to permit nailing of lumber blocking.

3.1.90 *nestable steel products*—rolled or formed steel products or containers that can be fitted into each other when packaged or loaded.

3.1.91 *net weight*—See definition under *weights.*

3.1.92 *OD*—outside diameter or outside dimension.

3.1.93 *oilproof*—a term used to describe packaging materials that are oil resistant.

3.1.94 *package*—one or more articles or pieces contained or secured into a single unit.

3.1.95 *pallet*—a structure of wood, metal, or other materials having two faces separated by stringers. Either or both faces may be solid or skeleton construction.

3.1.96 *piggy back*—highway trailers transported on freight cars.

3.1.97 *platform*—a structure of wood, metal, or other materials consisting of a deck supported by runners used to facilitate mechanical handling. The deck may be solid or skeleton.

3.1.98 *pneumatic tool*—a tool operated by air pressure for purpose of tensioning, sealing, nailing, and so forth.

3.1.99 *polyethylene*—a synthetic material used as a free film or in combination with other materials (usually paper) as a protective wrap, cover, or shroud.

3.1.100 *port mark*—marking that identifies the port of discharge.

3.1.101 *racks, storage*—a structure on which material is stored.

3.1.102 *reel*—any device with a flange on each end of which material may be wound, having a flange diameter of 12 in. (305 mm) or over.



Copyright ASTM International
Reproduced by IHS under license with ASTM
No reproduction or networking permitted without license from IHS
Copyright by ASTM Int'l (all rights reserved);
Reproduction authorized per License Agreement with Kathe Hooper (ASTMIHS Account); Mon Oct 3 12:05:46 EDT 2005
Not for Resale

3.1.103 *retarder plates*—formed metal plates secured to the floor through which unit securement bands are threaded. They are used to retard movement of loads.

3.1.104 *rub rail:*

—a rail extending around the perimeter of a flat-bed trailer.

—a buffer strip used in a conveyance between the side and the lading.

—a guide on flat cars used in TOFC service.

3.1.105 *runner*—member supporting platform deck.

3.1.106 *rust inhibitor*—a chemical agent used to retard oxidation.

3.1.107 *seal:*

—means of effecting strapping joints.

—protective device used to provide evidence that closure has not been disturbed.

3.1.108 *seal protector*—a protector to prevent strapping seal indentation damage to the product.

3.1.109 *secured lift*—See *lift.*

3.1.110 *separator*—any material placed between units of the package or load to provide clearance.

3.1.111 *shroud*—a protective cover placed over the load, unit, or package, covering the top and four sides.

3.1.112 *skeleton platform*—See *platform.*

3.1.113 *skid protector (stain protector)*—any of various practices followed to prevent corrosion damage from packaging lumber.

3.1.114 *skids*—supporting members placed either lengthwise or crosswise beneath and secured to the material to facilitate handling.

3.1.115 *solid platform*—See *platform.*

3.1.116 *spool*—a device with a flange at each end on which material may be wound, having flange diameters up to 12 in. (305 mm).

3.1.117 *stack*—placement of materials or package in tiers.

3.1.118 *stake pocket*—a metal receptacle that is part of the vehicle and that is designed for the acceptance of stakes.

3.1.119 *stakes*—metal or lumber placed vertically along sides of vehicle to prevent movement of the lading beyond the side of the vehicle. Also used to provide clearance between the lading and the side of the vehicle.

3.1.120 *stamp*—to identify with either metal or rubber die.

3.1.121 *stencil*—to provide identification through the use of a precut stencil.

3.1.122 *strapping*—flexible material used as a medium to fasten, hold, or reinforce, for example, steel strapping; flat steel band designed for application with tensioning tools.

3.1.123 *strapping joint*—location or method of providing a strapping closure.

3.1.124 *stringers*—supporting members that separate the two faces of a pallet.

3.1.125 *tag*—material, such as paper, plastic, or metal, on which product or shipping data are furnished and which is fastened to a package or container by wires, staples, tacks, and so forth.

3.1.126 *tally*—a recapitulation of items comprising a load.

3.1.127 *tare weight*—weight of container or packaging materials.

3.1.128 *tarpaulin*—water-resistant material used to protect load or materials from the elements.

3.1.129 *tension tie*—strapping applied with mechanical tools.

3.1.130 *theoretical weight*—a calculated weight based on nominal dimensions and the density of material.

3.1.131 *tier*—one of two or more rows placed one above the other.

3.1.132 *TOFC*—trailer on flat car. See *piggy back.*

3.1.133 *truck*—a rubber-tired highway vehicle in the form of a straight truck, semi-trailer, full trailer, or any combination thereof.

3.1.133.1 *flat bed*—a truck whose cargo-carrying area is a flat surface without sides, ends, or tops.

3.1.133.2 *low side*—a truck whose cargo-carrying area is a flat surface equipped with side and ends and approximately 2 ft 6 in. to 4 ft (0.76 to 1.22 m) in height.

3.1.133.3 *removable side*—a truck whose cargo-carrying area is a flat surface equipped with removable sides and rear door approximately 2 ft 6 in. to 8 ft (0.76 to 2.44 m) in height.

3.1.133.4 *open top high side*—a truck whose cargo-carrying area is a flat surface equipped with high sides and ends but no permanent top. The end at rear of vehicle opens to facilitate loading.

3.1.133.5 *pole trailer*—highway trailer with a pole-like connection between the front and back wheels for transporting long material.

3.1.133.6 *expandable trailer*—a flat trailer of more than one section which may be extended for long product.

3.1.133.7 *van*—a truck or trailer with nonremovable top.

3.1.134 *twist ties*—round or oval ties in which the joint is made by twisting the two ends together.

3.1.135 *unitized*—segments of the load secured into one unit.

3.1.136 *unsecured lifts*—See *lift.*

3.1.137 *VCI*—volatile corrosion inhibitor. One type of rust inhibitor.

3.1.138 *waster sheet*—a secondary grade sheet, sometimes used in packaging to increase resistance to mechanical damage.

3.1.139 *waterproof paper*—paper constructed or treated to resist penetration of water in liquid form for specific lengths of time.

3.1.140 *weights (package):*

3.1.140.1 *gross weight*—total weight of commodity and all packaging.

3.1.140.2 *lift weight*—the weight of the material in a lift.

3.1.140.3 *net weight*—the weight of the commodity alone excluding the weight of all packaging material or containers.

3.1.140.4 *tare weight*—weight of packaging components.

3.1.141 *weights (transportation):*

3.1.141.1 *gross weight*—total weight of lading and transporting vehicle.

3.1.141.2 *light weight*—the weight of the empty transporting vehicle. On rail cars, the light weight is stenciled on car sides.

3.1.141.3 *tare weight*—same as *light weight.*

3.1.142 *wrapped*—a package or shipping unit completely enclosed with protective material.



Copyright ASTM International
Reproduced by IHS under license with ASTM
No reproduction or networking permitted without license from IHS
Copyright by ASTM Int'l (all rights reserved);
Reproduction authorized per License Agreement with Kathe Hooper (Not for Resale, MIHS Account); Mon Oct 3 12:05:46 EDT 2005

**TABLE 1 Protective Coatings Used to Protect Steel Mill Products**

| Type | Method of Application | Purpose |
|---|---|---|
| Type A—Thin soft film preservative consisting of a rust inhibitor in petroleum oil | cold; spray, dip or brush | to provide protection against corrosion and staining of steel mill products for short-term preservation periods (up to 3 months indoor storage) |
| Type C—Hard drying varnish resinous or plastic coating | cold; spray, dip or brush | to provide protection against corrosion of steel mill products for intermediate-term preservation periods (up to 6 months outdoor storage) |
| Type D—Medium soft film preservative in a solvent | cold; spray, dip or brush | to provide protection for edges of coils or cut lengths |

## 4. General Provisions

4.1 *General*—It is recommended that producers and users follow the packaging, marking, and loading methods for individual steel products so described and illustrated herein. It is the responsibility of the purchaser to provide the producer with his requirements concerning protective wrapping materials. When unusual or special conditions require packaging, marking, and loading methods not covered herein, the purchaser should consult with the supplier. Each load involves variables in lading and equipment which cannot be precisely covered by loading rules. Therefore, it is essential that the receiver supply the shipper with pertinent information on his unloading methods and equipment.

4.2 *Railcar Loading*—All domestic rail shipments of steel products are loaded in accordance with the latest rules governing the loading of either open top cars or closed cars as published by the Association of American Railroads. These publications are entitled "Rules Governing the Loading of Commodities on Open Top Cars" and "Pamphlet 23—The Rules Governing the Loading of Steel Products in Closed Cars and Protection of Equipment."

4.3 *Truck Loading*—The trucker is responsible for the arrangement and securement of the load for safe transit, the protection of the lading from damage by binders, and the prevention of damage to the lading from the elements. These loads shall be in accordance with applicable state and federal or provincial, national, and international regulations.[5]

4.4 *Barge Loading*—There are no formal rules covering barge loading. Steel products are suitably packaged and the barge is loaded to provide ample clearance or blocking, or both, for subsequent handling and unloading. Covered or open-top barges may be used depending upon the nature of the product.

4.5 *Air Shipment*:

4.5.1 When metal plates, strips, sheets, bars, rods, angle stock, tubes, and pipe are to be shipped by air, they shall be packed as follows:

4.5.1.1 Plate, sheet, and strip shall be packed in snug-fitting boxes reinforced with steel straps or in metal packs.

4.5.1.2 Bar, rod, angle stock, pipe, and tube shall be packed in snug-fitting crates with solid wood ends or in boxes, as required for protection.

4.5.1.3 Single pieces or bundles of steel stock shall have a snug-fitting wood cap secured over each end. End caps shall be fabricated as shown in Fig. 1. Lumber and construction of end caps shall be as specified in 4.6.2. End capse shall be secured to each other by flat or round wire steel strapping. Straps should be secured to end caps with staples. Caps shall be a minimum of 18 in. (450 mm) in length and a minimum of 2½ in. (60 mm) square at the end.

4.5.1.4 Castings, forgings, and other large or irregular shapes shall be preserved, packed, and marked as agreed between purchaser and seller.

4.6 *Packaging Materials*:

4.6.1 *General*—Materials not covered by specifications or which are not specifically described herein shall be of a quality suitable for the intended purpose. Specifications described are intended as the minimum requirements for packaging of steel products. After the product has been delivered, purchasers are faced with the problems of disposal of the packaging materials. For this reason the simplest effective packaging is the most desirable. The packaging materials described are subject to change in accordance with the rapidly developing technology and the changing regulations affecting ecology.

4.6.2 *Lumber*—The proper selection of lumber for use in the packaging of steel products depends upon many factors, such as end use, compressive strength, beam strength, hardness, moisture content, nail-holding power, condition, and so forth. Detailed information is contained in Specifications D 245 and Test Methods D 2555.

4.6.3 *Protective Wrapping Material*—Protective wrappings are used in packaging to (*1*) retard moisture penetration, (*2*) minimize loss of oil, and (*3*) provide protection from dirt.

4.6.3.1 *Paper*—The basis weight is determined by the number of pounds per 500 sheets of 24 by 36 in. For example, 50-lb kraft paper will equal 50 lb per 500 sheets of 24 by 36 in. The following tests may be used to determine the physical properties of paper:

| Test | ASTM Method |
|---|---|
| Bursting strength | D 774 |
| Tensile strength | D 828 |

4.6.3.2 *Oil-Resistant Paper*—Paper treated, laminated, or constructed to resist absorption of oil from the packaged product.

4.6.3.3 *Waterproof Paper*—These papers are laminated, coated, or impregnated with a moisture-barrier material.

4.6.4 *Protective Coatings*—In selecting corrosion-preventive materials to protect steel mill products during shipment and storage, consideration should be given to ease and method of application, coverage desired, severity of

[5] Code of Federal Regulations Title 49—Transportation, Chapter III-Federal Highway Administration, Department of Transportation, Subchapter B-Motor Carrier Safety Regulations, Part 393, Parts and Accessories Necessary for Safe Operation, Safe Loading of Motor Vehicles. This footnote applies only to U.S. domestic shipments.



Copyright ASTM International
Reproduced by IHS under license with ASTM
No reproduction or networking permitted without license from IHS
Copyright by ASTM Int'l (all rights reserved);
Reproduction authorized per License Agreement with Kathe Hooper (ASTMIHS Account); Mon Oct 3 12:05:46 EDT 2005
Not for Resale

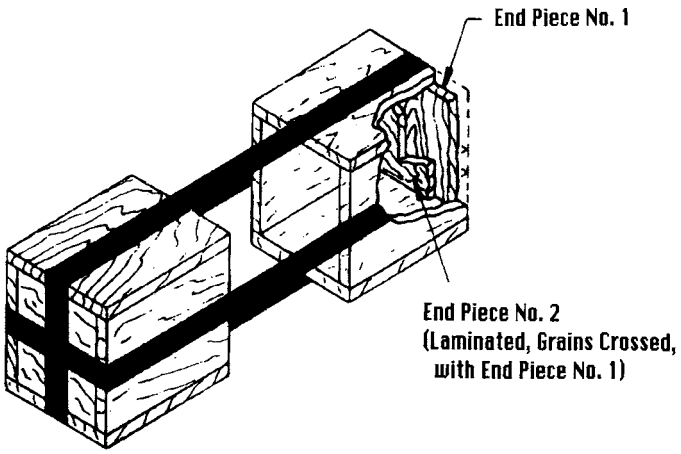


**FIG. 1 End Caps for Air Shipment**

conditions expected, and ease of removal. The material and method of application determined to be the best suited for protection of a product are based on experience. Therefore, selection of protective coatings should be left to the discretion of the steel supplier whenever possible. The protective coatings used on steel products are listed in Table 1.

4.6.5 *Package Ties*—Tying of packages shall be accomplished by tension-tying with bands or wire; or by hand tying and twisting heavy-gage wire or rods. Either bands or wire may be used for package ties, regardless of which type of tie is shown in illustrations in the individual product sections of this practice.

4.6.5.1 *Breaking Strength Ties*—used in packaging steel mill products shall have the minimum breaking strengths of Specification D 3953.

4.6.6 *Protectors*—Protectors are used with certain products to protect them from damage and to prevent shearing of the ties. Various materials, such as lumber, metal, plastic, fiber, or other suitable materials, are used under the package ties as required.

4.7 *Package Identification*:

4.7.1 All marking shall be legible and of a size consistent with the space available to be marked. All tags shall be securely affixed to the package to prevent loss in transit. Tags shall be of a size to show clearly all of the information required, and shall be able to withstand reasonable exposure to the elements.

4.7.2 *Marking Metal Surfaces*—Unless otherwise specified, metal surfaces shall be marked with either permanent ink or paint.

4.7.3 *Marking Containers*—All materials used for marking containers shall be resistant to the elements.

4.8 *Weight and Count*—When steel products are invoiced on mill scale weights and such weights are checked after shipment, variations from invoice weights up to 1 % are normally expected due to differences in the kind, type, and location of the scales. When invoiced on mill scale weights, where there are large quantities of one size or thickness, or where the number of pieces in a lift or bundle is required to be shown on the identification tags and shipping papers, the count is considered approximate and the weight is the more accurate. When steel products are invoiced on theoretical weights, the invoice weights are based on the number of pieces or lineal feet shipped.

4.9 *Packaging Lists or Tally*—Furnished as required. Such lists are compiled as accurately as practicable, subject to confirmation by the official shipping notice or invoice.

4.10 *Loss or Damage*—If upon delivery there is any evidence of loss or damage, exception should be taken by notation on the freight bill, and the carrier's representative should be called in to inspect the lading before unloading.

## 5. Semifinished Steel Products

5.1 Semifinished steel products are generally produced for further processing and, because of their nature, only the simple methods of packaging and loading described below are recommended.

5.2 *Product Grades*:

5.2.1 Carbon, alloy, and stainless steel ingots, blooms, billets, and slabs.

5.2.2 Carbon steel skelp in coils.

5.3 *Marking*:

5.3.1 It is normal practice to stamp or paint the heat number on each piece shipped loose and to show the heat number on a tag attached to each secured lift of smaller size billets. The ordered size and weight may be painted on at least one piece of each size when shipped loose or on at least one piece of each secured lift. Each skelp coil is tagged or marked with the heat number and the size.

5.3.2 *Color Marking*—There is no generally recognized color code for identification of steel grades. When specified, color marking to denote grade is applied. In such cases a dash of color on one end of loose pieces is sufficient. In the case of secured lifts of smaller sizes, the grade is shown on a tag attached to the lift or by a dash of one color on one end of the lift.

5.4 *Packaging*:

5.4.1 Semifinished steel products are usually shipped loose. When specified, lifts of billets 9 in.[6] (58 cm[6]) and under in cross section may be secured into lifts of 5 tons (4.5 Mg) or heavier. The securement of this type of package consists of ties of soft wire rod or tensioned flat bands. The number of ties to be used on any specific lift can best be determined by the shipper's experience.

5.4.2 Skelp in coils is secured with a minimum of two ties per coil.

5.4.3 Semifinished steel products are usually shipped in open-top equipment and require no further protection from the elements.

5.5 *Loading*—Semifinished steel products are usually shipped loose with different sizes or weights segregated. Unitizing requires additional labor and material.

## 6. Hot-Rolled Bars and Bar-Size Shapes

6.1 Hot-rolled bars and bar-size shapes are usually further processed by the purchaser. Simple methods of packaging and

[6] A revision of Simplified Practice Recommendation R 247–62, formerly published by the U. S. Department of Commerce.



Copyright ASTM International
Reproduced by IHS under license with ASTM
No reproduction or networking permitted without license from IHS
Copyright by ASTM Int'l (all rights reserved);
Reproduction authorized per License Agreement with Kathe Hooper (ASTMIHS Account); Mon Oct 3 12:05:46 EDT 2005
Not for Resale

loading are recommended. The major consideration is the prevention of physical damage in transit, such as bending or twisting.

6.2 *Product Grades*:

6.2.1 Carbon, alloy, and stainless steel bars, and bar-size shapes.

6.2.2 Concrete reinforcing bars.

6.3 *Marking*:

6.3.1 *Carbon, Alloy, and Stainless Steel Bars, and Bar-Size Shapes*:

6.3.1.1 It is normal practice to identify each lift or coil with a tag containing the following information:

*(1)* Producer's name, brand, or trademark,

*(2)* Size,

*(3)* ASTM designation (year date is not required),

*(4)* Heat number,

*(5)* Weight (except coils),

*(6)* Customer's name, and

*(7)* Customer's order number.

6.3.1.2 *Die Stamping of Carbon Steel Bars*—The ultimate uses of the products do not usually require die stamping. Therefore, this method of marking for other than mill identification requires additional labor and handling.

6.3.1.3 *Die Stamping of Alloy and Stainless Steel Bars*—When specified, heat numbers or symbols are stamped on one end or on the surface near the end of rounds, squares, hexagons, and octagons 2 in. (51 mm) and larger, and on flats 2 in. in width or 2 in. or over in thickness.

6.3.1.4 The above described marking is practicable on smaller sizes down to a minimum of 1 in. (25 mm) in thickness and 1 in. in width for flats, and not less than 1 in. in thickness or diameter for other bars, but because of its precise nature, such marking delays normal production.

6.3.1.5 Stamping of sizes under 1 in. is not practicable. These sizes are secured in lifts and tagged to show heat numbers or symbols.

6.3.1.6 *Color Marking*—There is no standard color code for identification of steel grades. When marking of bars with identification colors is required, the following practices are regularly employed:

*(1)* Sizes 2 in. (51 mm) and over are marked on one end with not more than two colors.

*(2)* Sizes 1½ in. (38 mm) up to 2 in. (51 mm) are marked on one end with not more than one color.

*(3)* Sizes smaller than 1½ in. (38 mm) are not marked individually; but the bundle, lift, or pile (any size bar or flats) is marked on one end with a dab of paint of one color or not more than two different colored stripes.

*(4)* Bars are regularly painted after assembly into lifts, and due to the nonuniformity of ends, it is not expected that paint will be on every bar in the lift. Any other paint marking slows normal production. Superimposed color marking requires additional labor and time for drying.

*(5)* When the back of the tag is color marked, one or two colors are used or the names of the colors are given.

6.3.2 *Concrete Reinforcing Bars*:

6.3.2.1 It is normal practice to identify each lift with a tag containing the following information:

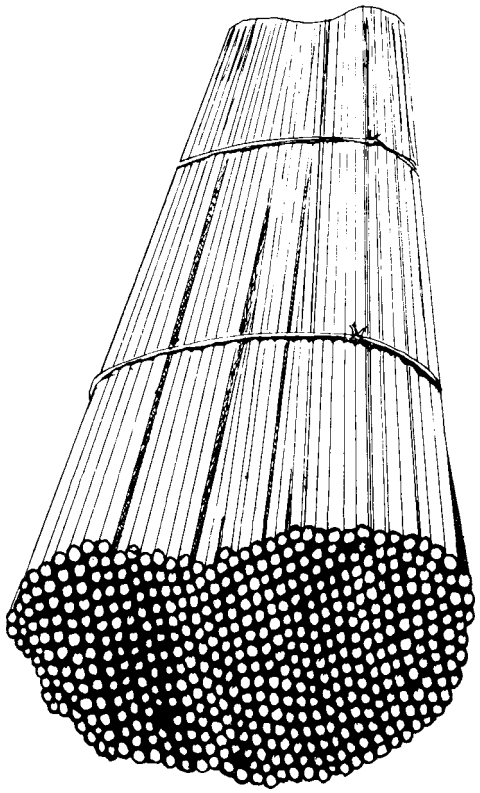

**FIG. 2 Suitable Secured Lift-Hot-Rolled and Cold-Finished Bars and Bar-Size Shapes**

*(1)* Producer's name, brand, or trademark,

*(2)* Size or bar designation number, and

*(3)* Grade and specification.

6.3.2.2 *Color Marking*—When specified, a dab of paint, one color only for each grade, is placed on one end of each lift to distinguish grades. Such marking augments but does not replace the marking requirements contained in the product specification.

6.4 *Packaging*:

6.4.1 *Carbon, Alloy, and Stainless Steel Bars, and Bar-Size Shapes*:

6.4.1.1 *Secured Lifts*—Bars are generally packaged into secured lifts (see Fig. 2 and Fig. 3). The recommended weight of hot-rolled bars in a secured lift is 10 000 lb (4.5 Mg). Lifts under 10 000 lb require additional material and handling. Producers recommend that purchasers specify the maximum possible weight for lifts because heavier units withstand transportation hazards better and result in greater economy to both the purchaser and the producer. The securement of this type of package consists of ties of soft wire rod or tensioned flat bands. The number of ties to be used on any specific lift can best be determined by the shipper's experience. This recommended securement is adequate for normal handling and transit requirements. Handling by means of the package ties or by magnet is considered an unsafe practice and is not recommended.

6.4.1.2 *Loose Bars*—The term "loose" means single pieces that can be handled individually. This method of loading is sometimes used when shipping to purchasers who unload by hand or magnet or for shipping large bars.



Copyright ASTM International
Reproduced by IHS under license with ASTM
No reproduction or networking permitted without license from IHS
Not for Resale
Reproduction authorized per License Agreement with Kathe Hooper (ASTMIHS Account); Mon Oct 3 12:05:46 EDT 2005

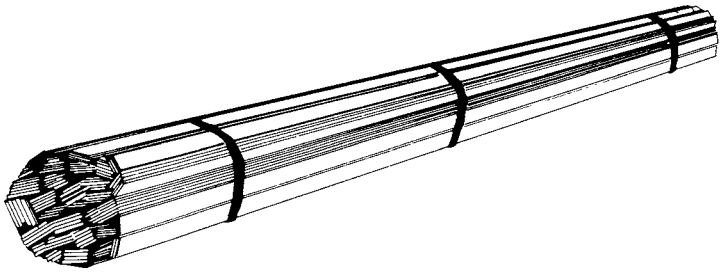

**FIG. 3 Suitable Secured Lift-Flats**

6.4.1.3 *Stack Piling*—This method of piling is regularly used for straightened flats and certain shapes and consists of arranging pieces in order and securing into lifts of 10 000 lb (4.5 Mg) minimum weight. Stack piling of bars under 1 in. (25 mm) in width is impractical. When stack piling is specified for other than straightened flats or shapes, additional handling is generally required. Fig. 4 illustrates a suitable lift of stack-piled straightened flats.

6.4.1.4 *Bar Coils*—Hot-rolled bar coils are regularly secured with two ties of soft wire or flat steel bands and loaded loose, unprotected, in open-top equipment. Bar coils that have had special treatment, such as cleaned and coated or cleaned and oiled, are loaded in closed or covered equipment and require additional labor and material. Securing two or more bar coils into a coil group requires additional labor and material.

6.4.1.5 *Protective Coatings*—The nature of hot-rolled bars or bar-size shapes is such that protective coatings are not regularly applied.

6.4.2 *Concrete Reinforcing Bars*—Concrete reinforcing bars are secured in lifts as illustrated in Fig. 2. The recommended weight of bars in the secured lift is 10 000 lb (4.5 Mg) or more. Lifts under 10 000 lb require additional labor and materials. The securement of this type of package consists of ties of soft wire rods or tensioned flat bands. The number of ties to be used on any specific lift can best be determined by the shipper's experience. Secured lifts in the smaller sizes may contain individually tied bundles within the lift. Bundling of the smaller sizes requires additional material and handling. Packaging of concrete reinforcing bars into units of specified count, weight, or dimensions requires additional handling and material.

6.5 *Loading*:

6.5.1 Carbon, alloy, and stainless steel bars, bar-size shapes, and concrete reinforcing bars are regularly shipped unprotected in open-top equipment. Loading of closed equipment and flatcars requires additional handling and materials.

6.5.2 When separation of lifts is required to allow sufficient clearances needed for unloading equipment, separators or bearing pieces are furnished up to a maximum of commercial 4-in. lumber.

6.5.3 *Weather Protection*—Hot-rolled bars, hot-rolled heat-treated bars, bar-size shapes, and concrete reinforcing bars generally require further processing or fabrication and, therefore, are regularly shipped in open-top equipment, unprotected. When the bars are scale-free or have been processed beyond the as-rolled or heat-treated condition, such as by pickling and oiling or by pickling and liming, producers usually recommend protection by shipment in covered equipment or by wrapping or shrouding when loaded in open-top equipment. In covered rail equipment, shrouding may be required. Fig. 5 illustrates a suitable method of wrapping lifts for loading in open-top equipment. Fig. 6 illustrates a suitable method of shrouding the carload. The material is a waterproof paper or plastic sheet placed over a number of lifts or over the entire carload and suitably secured.

## 7. Cold-Finished Bars

7.1 Cold-finished carbon, alloy, and stainless steel bars are among the most highly finished products of the steel industry. Because of their high finish and the exacting uses to which such products are put, packaging and loading methods are very important.

7.2 *Product Grades*—Carbon, alloy, and stainless steel bars.

7.3 *Marking*:

7.3.1 *Carbon, Alloy, and Stainless Steel Bars*:

7.3.1.1 It is normal practice to identify each lift with a tag containing the following information:

*(1)* Producer's name, brand, or trademark,

*(2)* Size,

*(3)* ASTM designation (year date is not required),

*(4)* Heat number,

*(5)* Weight,

*(6)* Customer's name, and

*(7)* Customer's order number.

7.3.1.2 *Die Stamping*—It is not regular practice to die-stamp cold-finished bars. Therefore, when specified, this method of marking retards the normal flow of materials.

7.3.1.3 *Color Marking*—When the marking of bars with identification colors is required, the following practices are employed:

*(1)* Sizes 1½ in. (38 mm) and over are marked on one end with not more than two colors.

*(2)* Sizes smaller than 1½ in. are not marked individually, but the bundle, lift, or pile is marked on one end with a dab of paint of one color or not more than two different colored stripes.

*(3)* Any other paint marking slows normal production.

*(4)* Superimposed color marking also requires additional labor and time for drying.

*(5)* When the back of the tag is marked, one or two colors are used or the names of the colors are spelled out.

7.4 *Packaging*:

7.4.1 *Carbon, Alloy, and Stainless Steel Bars*:



Copyright ASTM International
Reproduced by IHS under license with ASTM
No reproduction or networking permitted without license from IHS
Copyright by ASTM Int'l (all rights reserved);
Reproduction authorized per License Agreement with Kathe Hooper (ASTMIHS Account); Mon Oct 3 12:05:46 EDT 2005
Not for Resale

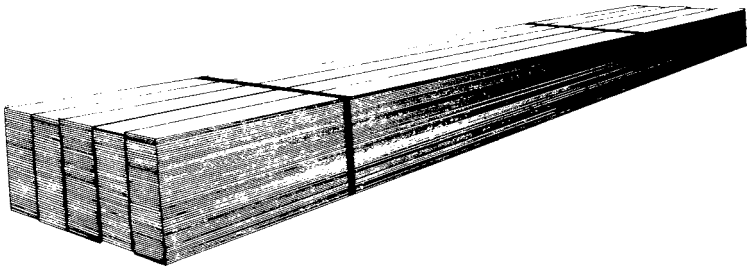

**FIG. 4 Suitable Lift of Stack-Piled Straightened Flats**

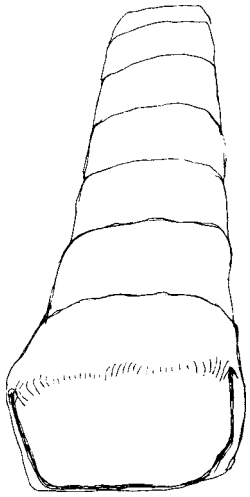

**FIG. 5 Suitable Method of Wrapping Lifts for Loading in Open-Top Equipment**

7.4.1.1 *Secured Lifts (*Fig. 2*)*—The recommended minimum quantity of cold-finished bars in the secured lift is 6000 lb (2.7 Mg). Producers recommend that purchasers specify the maximum possible weight for lifts because heavier lifts withstand transportation hazards better and result in greater economy to both the purchaser and the producer. The packaging of bars into lifts for closed-car loading requires additional handling. The securement of this type of package consists of ties of soft wire or flat steel bands. Ties are regularly applied as follows:

| | |
|---|---|
| Up to 15 ft (4.57 m), incl | 3 ties |
| Over 15 ft to 22 ft (4.57 to 6.71 m), incl | 4 ties |
| Over 22 ft to 33 ft (6.71 to 10.06 m), incl | 5 ties |
| Over 33 ft (10.06 m) | 6 ties |

The recommended securement is adequate for normal handling and transportation requirements. Handling by means of the package ties or by magnet is considered an unsafe practice and is not recommended.

7.4.1.2 *Loose Bars*—The term “loose” means single pieces that can be handled individually. This method of loading is used by producers in the loading of large sizes.

7.4.1.3 *Stack Piling*—This method of piling is regularly used for straightened flats and certain shapes and consists of arranging pieces in order, in one or more piles, into secured lifts of 6000 lb (2.7 Mg) minimum weight. Stack piling of bars under 1 in. (25 mm) in width is impractical. When stack piling is specified for other than straightened flats, additional handling is generally required. The stacking or piling of all bars or bar-size shapes, including straightened flats, into lifts of specified count or dimensions involves additional handling. Fig. 4 illustrates a suitable lift of stack-piled straightened flats.

7.4.1.4 *Bundling*—Cold-finished round, square, hexagon, or similar bar sections 5⁄16 in. (7.9 mm) and under are put up in hand bundles because of the flexible nature of the material. Bundling of sizes over 5⁄16 in. requires additional handling. Fig. 7 illustrates a suitable hand bundle. Such bundles regularly contain not less than three pieces, the package weighs from 150 to 200 lb (68 to 91 kg), and is tied with No. 14 gage (1.63-mm) wire or its equivalent as follows:

| | |
|---|---|
| Up to 8 ft (2.44 m), incl | 2 ties |
| Over 8 ft to 16 ft (2.44 to 4.88 m), incl | 3 ties |
| Over 16 ft to 20 ft (4.88 to 6.10 m), incl | 4 ties |
| Over 20 ft to 24 ft (6.10 to 7.32 m), incl | 5 ties |

Fig. 8 illustrates a bundle of bars banded to a board. Small quantity items unable to support their own weight without possible damage from bending or distortion are usually secured to boards or boxed.

7.4.1.5 *Containers*—Due to the special high finish and very close tolerances of some cold-finished bars, packaging in special containers for extra protection against damage is required. This type of packaging requires additional material and handling. Less than carload or less than truckload shipments of polished, turned ground and polished, cold-drawn ground and polished bars and shafting, or any bars produced to a high finish, are packaged in chipboard tubes, wood boxes, corrugated fiberboard boxes or other suitable containers. Fig. 9 illustrates a suitable chipboard container. Such containers are made of heavy spirally wound chipboard with various end closures. Fig. 10 illustrates a suitable wood box. Such boxes are made of seasoned lumber, lined with paper, and are reinforced with bands or wire at the ends and at intermediate points, as required.

7.4.1.6 *Protective Coatings*—Cold-finished bars are coated with corrosion preventatives or shipped without protective coating depending upon the use and the purchaser’s specification.

7.5 *Loading*:

7.5.1 Cold-finished carbon, alloy, and stainless steel bars are normally shipped in closed or covered equipment. Loading in box cars requires additional handling.

7.5.2 When separation of lifts or piles in cars is required to allow sufficient clearances for unloading equipment, separators or bearing pieces are furnished up to a maximum of commercial 4-in. lumber. Loads are often shipped in bulkhead equipment or are rigidly braced for protection in transit.

7.5.3 Where additional protection is specified in covered gondolas, material may be wrapped or shrouded as illustrated



Copyright ASTM International
Reproduced by IHS under license with ASTM
No reproduction or networking permitted without license from IHS
by ASTM Int'l (all rights reserved);
Reproduction authorized per License Agreement with Kathe Hooper (ASTMIHS Account); Mon Oct 3 12:05:46 EDT 2005
Not for Resale

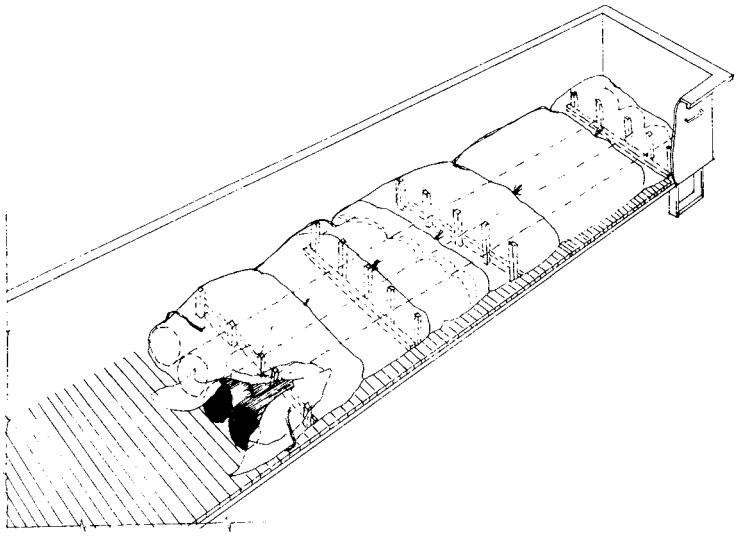

FIG. 6 Suitable Method of Shrouding Carload

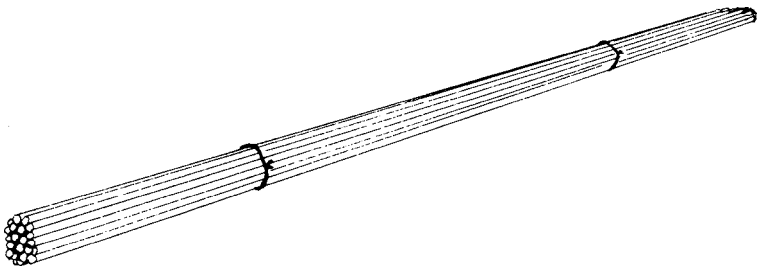

FIG. 7 Suitable Hand Bundle of Cold-Finished Bars

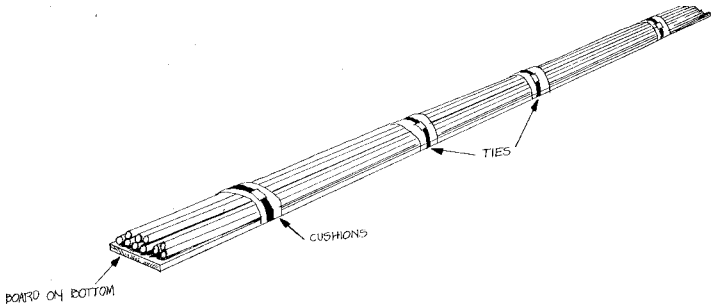


FIG. 8 Bundle of Cold-Finished Bars Secured to a Board

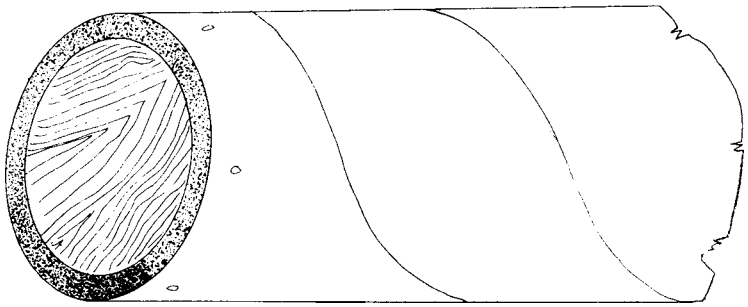

FIG. 9 Suitable Chipboard Container

in Fig. 9 or Fig. 10. Fig. 5 illustrates a suitable method for wrapping lifts of cold-finished bars. Fig. 6 illustrates a suitable method of shrouding the carload.

## 8. Structural Shapes and Steel Sheet Piling

8.1 *Product Grades*:



Copyright ASTM International
Reproduced by IHS under license with ASTM
No reproduction or networking permitted without license from IHS
Copyright by ASTM Int'l (all rights reserved);
Reproduction authorized per License Agreement with Kathe Hooper (ASTMIHS Account); Mon Oct 3 12:05:46 EDT 2005
Not for Resale

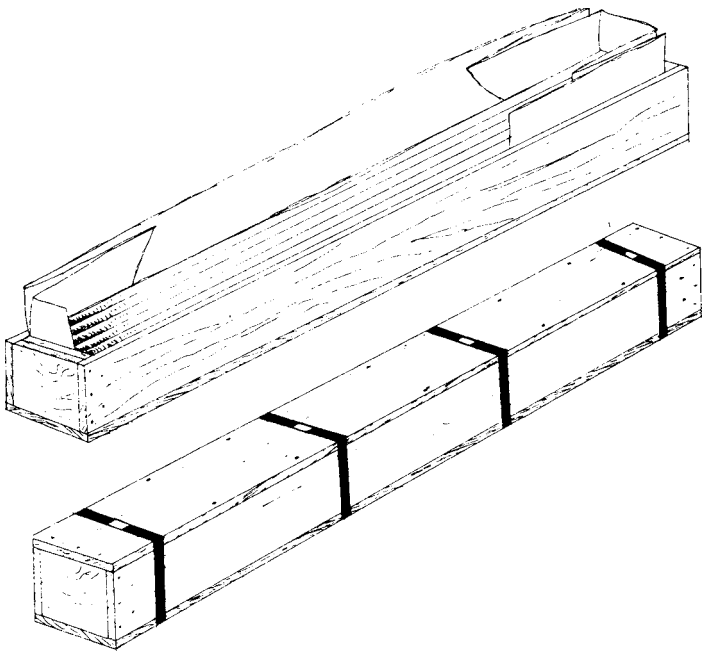

**FIG. 10 Suitable Wood Box for Cold-Finished Bars**

8.1.1 Carbon, high-strength low-alloy, and stainless steel structural shapes.

8.1.2 Steel sheet piling.

8.2 *Marking*:

8.2.1 *Carbon, High-Strength Low-Alloy, and Stainless Steel Structural Shapes*:

8.2.1.1 It is normal practice to mark each individual structural shape shipped loose or tag each secured lift with the following information:

*(1)* Producer's name, brand, or trademark,

*(2)* Section designation or size of section,

*(3)* Heat number,

*(4)* Length, and

*(5)* Grade or type (stainless steel).

8.2.1.2 *Die Stamping*—When specified, the heat number is die-stamped in one location. Die stamping or hot rolling the heat number into structural shapes is not universally practiced. The standard sizes of steel die-stamps are ¼ in., 5⁄16 in., and ⅜ in. (6.4 mm, 7.9 mm, and 9.5 mm). Any additional or different marking other than as indicated above or specifying stamping with steel die-stamps of sizes other than indicated is negotiated between purchaser and manufacturer.

8.2.1.3 *Color Marking*—On structural shapes made to certain ASTM specifications, color marking is required. Each structural shape shipped loose is marked with one or two color stripes. When shipped in secured lifts, the lift is marked with a vertical stripe for the full height of the lift. Each piece in the lift shall be marked by this stripe.

8.2.2 *Steel Sheet Piling*—It is normal practice to mark each steel sheet piling with the following:

*(1)* Producer's name, brand, or trademark,

*(2)* Heat number, and

*(3)* Length.

Additional or different marking requires additional handling and complicates the normal marking procedure.

8.3 *Packaging*:

8.3.1 *Carbon, High-Strength Low-Alloy and Stainless Steel Structural Shapes*—Structural shapes are normally shipped in unsecured lifts or units weighing approximately 10 000 to 20 000 lb (4.5 to 9.0 Mg). Various methods are used to maintain the unity of such lifts during transit. At manufacturer's option, small sizes may be secured to facilitate identification, handling, or transportation.

8.3.2 *Steel Sheet Piling*—Steel sheet piling is normally handled and loaded in lifts or units weighing approximately 10 000 to 20 000 lb (4.5 to 9.0 Mg), depending on the size of piling sections.

8.4 *Loading*:

8.4.1 *Carbon, High-Strength Low-Alloy, and Stainless Steel Structural Shapes*:

8.4.1.1 *Loading Practice*—Structural shapes are loaded unprotected in open-top equipment because of their nature and the universal use of mechanical unloading equipment. The method used to separate lifts in the car to facilitate unloading can best be determined at the time of loading. Wood blocking and endwise staggering are typical means of separating lifts. Segregation of sections by size, type, or item into separate cars requires additional handling.

8.4.1.2 *Weather Protection*—Structural shapes, due to their nature, are seldom protected from the weather in transit. Protection such as shrouding requires additional labor and material.

8.4.2 *Steel Sheet Piling*—Because of its nature and the universal use of mechanical unloading equipment, steel sheet piling is loaded unprotected in open-top equipment. The method used to separate lifts in the car and thus facilitate unloading can best be determined at the time of unloading. Wood blocking and endwise staggering are typical means of separating lifts.



Copyright ASTM International
Reproduced by IHS under license with ASTM
No reproduction or networking permitted without license from IHS
by ASTM Int'l (all rights reserved);
Reproduction authorized per License Agreement with Kathe Hooper (ASTMIHS Account); Mon Oct 3 12:05:46 EDT 2005
Not for Resale

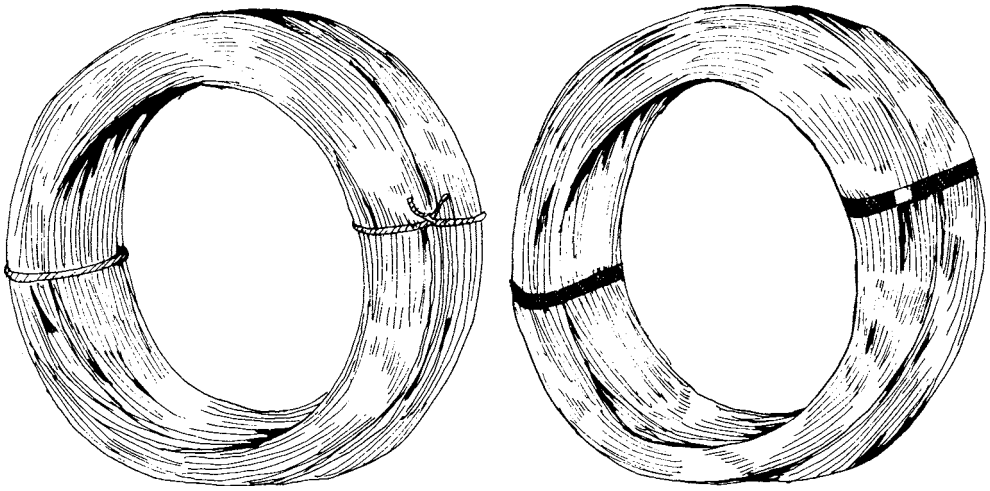

FIG. 11 Securement of Hot-Rolled Rods in Individual Coils

## 9. Rods, Wire, and Wire Products

9.1 Hot-rolled wire rods are regularly produced for further processing, and because of their nature only simple methods of marking, packaging, and loading are required.

9.1.1 The major consideration is the prevention of physical damage in transit, such as bending and twisting.

9.1.2 Other wire and wire products however, are among the most highly finished products of the steel industry, and marking, packaging, and loading methods are very important.

9.1.3 Because of the many specific combinations of size, grades, and types supplied in wire, no standard limits for types, diameters, weights, and coil sizes are established. Limitations for coil sizes are controlled by manufacturing practices and other factors.

9.1.4 The purchaser should give careful consideration to marking, packaging, and loading requirements when ordering, and if in question about a suitable method, should consult with the manufacturer. Consultation is usually essential to develop mutually satisfactory methods for packaging of specific products.

9.2 *Product Grades*:

9.2.1 Hot-rolled rods (all grades).

9.2.2 Merchant wire products.

9.2.3 Carbon, alloy, and stainless steel wire (in coils).

9.2.4 Carbon, alloy, and stainless steel wire (straightened and cut).

9.3 *Marking*:

9.3.1 *Hot-Rolled Rods in Coils*—It is normal practice to tag each coil with the following information:

9.3.1.1 Producer's name, brand, or trademark,

9.3.1.2 Grade, product identification or type (stainless steel only),

9.3.1.3 Size,

9.3.1.4 Heat number,

9.3.1.5 Customer's name, and

9.3.1.6 Customer's order number.

*(1)* When identification colors are specified, marking practice shall be limited to paint striping coil with one color.

9.3.2 *Merchant Wire Products*—It is normal practice to identify each package with the following information, as applicable:

9.3.2.1 Producer's name, brand, or trademark,

9.3.2.2 Product name:

*(1)* Design or construction

*(2)* Style

9.3.2.3 Size,

9.3.2.4 Type or class of coating,

9.3.2.5 Finish,

9.3.2.6 Length,

9.3.2.7 Width and mesh, and

9.3.2.8 Height.

9.3.3 *Carbon, Alloy, and Stainless Steel Wire*—It is normal practice to identify each coil or package with the following information:

9.3.3.1 Customer's name,

9.3.3.2 Customer's order number,

9.3.3.3 Producer's name, brand, or trademark,

9.3.3.4 Grade, product identification or type (stainless steel only),

9.3.3.5 Size,

9.3.3.6 Heat number,

9.3.3.7 Quality (when applicable),

9.3.3.8 Finish, and

9.3.3.9 Weight (except coil).

When identification colors are specified, marking practice shall be limited to paint striping coil, one end of bundle or lift with one color.

9.4 *Packaging*:

9.4.1 *Hot-Rolled Rods in Coils* are shipped as individual coils or in coil groups. Securement of individual coils is with a minimum of two twisted wire ties, or tensioned flat bands (Fig. 11). Coil groups are secured with a minimum of two tensioned flat bands (Fig. 12).

9.4.1.1 *Protective Coatings*—It is not standard practice to apply protective coatings to hot-rolled rods, as the product is generally intended for further processing.



Copyright ASTM International
Reproduced by IHS under license with ASTM
No reproduction or networking permitted without license from IHS
Copyright by ASTM Int'l (all rights reserved);
Reproduction authorized per License Agreement with Kathe Hooper (ASTMIHS Account); Mon Oct 3 12:05:46 EDT 2005
Not for Resale

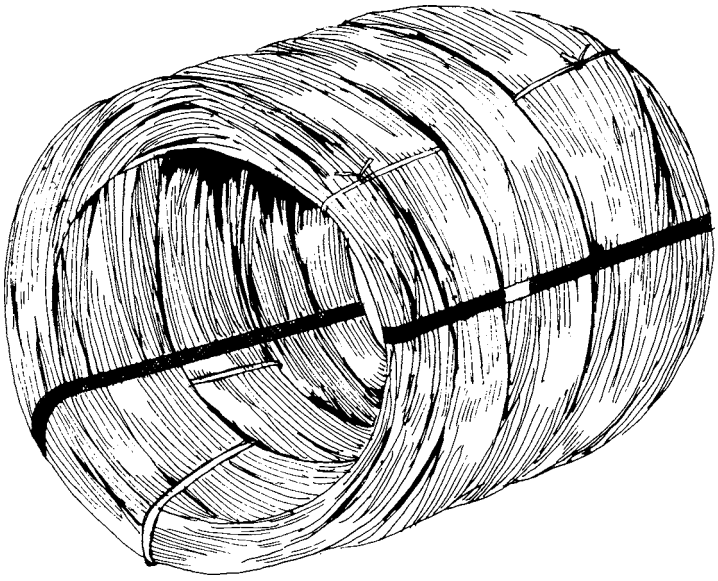

FIG. 12 Securement of Hot-Rolled Rods in Coil Group

9.4.2 *Merchant Wire Products* are finished products sold through distributors or merchandisers and are primarily intended for agricultural, building and home consumption. These products are packaged in various ways depending upon the end use as shown in Table 2 and Figs. 13-26.

9.4.3 *Carbon, Alloy, and Stainless Steel Wire in Coils*—Wire is among the most highly finished products of the steel industry. Packaging, marking, and preservation methods are very important and the purchaser should give careful consideration to these requirements when ordering. Wire is drawn from hot-rolled rods. The choice of the wire drawing block diameter for a given wire size varies from manufacturer-to-manufacturer and is dependent upon the equipment in the plants and the buyer's uncoiling equipment. Wire is commonly produced in catchweight coils of one single length and generally wound in a counterclockwise direction. For special requirements, wire may also be furnished in exact weight coils, exact length coils, or straightened and cut lengths. Carbon, alloy, and stainless steel wire in coils may be packaged as shown in Table 3 and Figs. 27-37. When protection is necessary it should be specified, depending on finish, end use, type of package, mode of transportation, etc. The following types of protection are available when specified:

| Package | Protection |
|---|---|
| Single coil | Spiral wrap(s) up to approximate 600-lb (272-kg) maximum weight. Protection of heavier coils should be negotiated with manufacturer |
| Coil on carrier | Shroud |
| Reel-less coil | Shroud |
| Wood rack | Shroud |
| Reel | Wrap(s) between flanges |
| Container | Liner or shroud, depending on type of package |

NOTE 1—If special finishes require additional protection, negotiate with manufacturer.

9.4.3.1 *Protective Coating*—Depending upon finish, end use, and shipping or storage conditions, oiling may be specified. The use of specified brands of oil involves special handling and interferes with normal processing. Spray oiling of packages may be helpful but affords inadequate protection under normal conditions. Shipment should be in closed equipment.

9.4.4 *Carbon, Alloy, and Stainless Steel Wire, Straightened and Cut Lengths*, is packed in containers, bundles, or lifts as shown in Table 4 and Figs. 38-47.

9.4.4.1 *Protective Coatings*—Oiling of straightened and cut length wire requires additional handling and material. Flat wire is generally oiled for protection in transit. The use of special brands of oil involves excessive inventory of oil and disrupts the normal manufacturing process. Spray oiling of packages may be helpful but affords inadequate protection under some conditions.

9.5 *Loading*—Hot-rolled wire rods are regularly shipped in open-top equipment except material that has had special treatment, such as cleaning and coating or oiling. Such material is generally loaded in closed equipment and may require additional handling and material. Due to the nature and high finish of steel wire and wire products, they are normally shipped in closed equipment. Special rail equipment, such as DF (damage free), compartment, and insulated cars, are suitable and can be used for wire products.

## 10. Tubular Products

10.1 Tubular products can be used in the as-shipped condition or further processed into a finished product. The end use directly affects the extent and types of packaging and marking required.

10.2 *Product Grades*:

10.2.1 Mechanical tubing.

10.2.2 Pressure tubing.

10.2.3 EMT conduit.

10.2.4 Rigid conduit.

10.2.5 Standard pipe.

10.2.6 Line pipe.

10.2.7 Oil country goods.



Copyright ASTM International
Reproduced by IHS under license with ASTM
No reproduction or networking permitted without license from IHS
by ASTM Int'l (all rights reserved);
Reproduction authorized per License Agreement with Kathe Hooper (ASTMIHS Account); Mon Oct 3 12:05:46 EDT 2005
Not for Resale

**TABLE 2 Packaging Merchant Wire Products**

| | |
|---|---|
| Bale ties (3 to 20-ft (0.91 to 6.10-m) lengths) | Ends protected, secured with spiral tie wire the entire length of the bundle (Fig. 13).<br>Size, gage — Ties per Bundle<br>11 — 125<br>12, 13, and 14 — 250<br>14½, 15, 15½, 16, and 16½ — 500 |
| Baling wire: | |
| 6500-ft (1981-m) minimum length coil (100 lb (45.4 kg) approximate weight) | One coil in self-dispensing corrugated carton (Fig. 14). |
| 3150-ft (960-m) minimum length coil (48.5 lb (22 kg) approximate weight) | Two coils in corrugated box.<br>Note—Packaging must comply with ASAE Standard S 229 (latest revision). |
| Barbed wire | 80-rod spool, secured with wire ties (Fig. 15). |
| Fence and netting | In rolls secured with wire ties (Fig. 16). |
| Fence panels | Ten sheets per bundle, inverted; five bundles per lift (Fig. 17).<br>Bundles secured at the four corners with wire ties.<br>Lift secured in the four corners with rod ties. |
| Fence posts | Five posts per bundle, 40 or 50 bundles per lift (manufacturer's option), secured (Fig. 18 and Fig. 19).<br>Bundle is secured with minimum of two flat bands.<br>Lift is secured with minimum of two flat bands. |
| Fence wire | 150-lb (68-kg) catchweight coil secured with four wire ties (Fig. 20). |
| Fence assemblies/accessories: | |
| End and corner posts | Secured into a set. |
| Brace, complete with bolts | Five braces per bundle. |
| Stretchers and tools | Single unit. |
| Stays | 100 per bundle, secured with a minimum of three ties. |
| Fasteners (clamps) | 25 or 50 fasteners in a bag; 1000 or 2500 fasteners in a shipping bag or container (manufacturer's option). |
| Gates, complete with screws, fittings, and latches | Single unit. |
| Lath-tie wire | One 25-lb (11-kg) bundle in corrugated box (Fig. 24). |
| Merchant quality wire | One or more pieces of wire in a 100-lb (45-kg) coil secured with a minimum of three wire ties or flat bands (Fig. 20).<br>100-lb coil group secured with a minimum of three wire ties or flat bands segregated in increments of 10 or 25 lb (4.5 or 11 kg), each secured with three wire ties or flat bands Fig. 20).<br>When specified, two or more 100-lb coils may be combined into coil groups secured with a minimum of three wire ties or flat bands (Fig. 20). |
| Nails, brads, staples, spikes: | |
| Bulk | 50-lb (22-kg) corrugated box (Fig. 21). |
| Packaged | 1 and 5-lb (0.5 and 2-kg) boxes, packed in 50-lb shipping containers (Fig. 22 and Fig. 23). |
| Reinforcing bar tie wire | Twenty, approximate 4-lb (1.8-kg) coils in corrugated box (Fig. 25). |
| The following items may be furnished on pallets: baling wire, barbed wire, lath-tie wire, netting, nails, brads, staples and spikes, and reinforcing bar tie wire (Fig. 26). | |

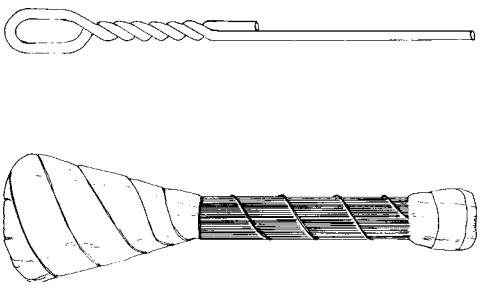

**FIG. 13 Bale Ties**

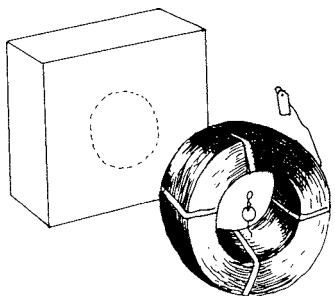

**FIG. 14 Coil of Baling Wire and Self-Dispensing Carton**

10.2.8 Couplings and fittings.

10.2.9 Stainless steel tubing and pipe.

10.3 *Marking*—It is normal practice to identify each piece of large diameter steel pipe or tubing shipped loose, or each secured lift or package of smaller sizes with the following information:

*(1)* Producer's name, brand, or trademark.

NOTE 2—The above practice is subject to modification as to standard specifications if applicable.

10.4 *Packaging*:

10.4.1 *Mechanical and Pressure Tubing*— This product is shipped loose or in packages (secured lifts) up to 10 000 lb (454 kg). The type of package normally depends on the length and surface quality of the tubing, the user handling facilities, and the method of storage. Thin-wall, polished, or bright finish tubing subject to possible damage during transit is furnished in



Copyright ASTM International
Reproduced by IHS under license with ASTM
No reproduction or networking permitted without license from IHS
Copyright by ASTM Int'l (all rights reserved);
Reproduction authorized per License Agreement with Kathe Hooper (ASTMIHS Account); Mon Oct 3 12:05:46 EDT 2005
Not for Resale

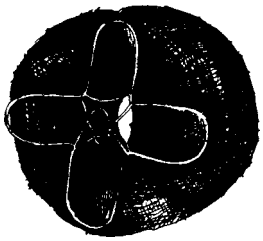

FIG. 15 Spool of Barbed Wire

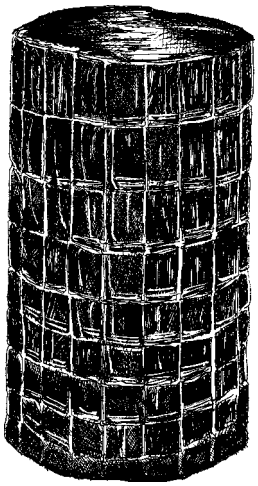

FIG. 16 Roll of Fence/Netting

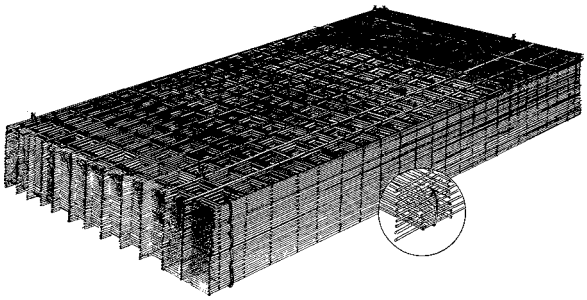

FIG. 17 Secured Lift of Fence Panels



FIG. 18 5-Post Bundle

wrapped packages, frame packages, or boxes. All packages are secured with tension ties. See Figs. 48-51 for types of packages. The number of ties are shown as follows:

| Length, ft (m) | Minimum Number of Ties |
|---|---|
| Up to (3.05), incl | 2 |
| Over 10 to 15 (3.05 to 4.57), incl | 3 |
| Over 15 to 22 (4.57 to 6.71), incl | 4 |
| Over 22 to 33 (6.71 to 10.06), incl | 5 |
| Over 33 (10.06) | 6 |

NOTE 3—Sub-bundles are used for EMT conduit (10.4.2), rigid conduit (10.4.3), and standard pipe (10.4.4).

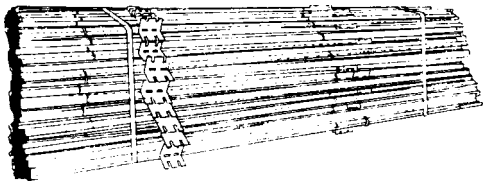

FIG. 19 Secured Lift of 5-Post Bundles

10.4.2 *EMT Conduit*—This product is normally shipped in packages weighing 2000 lb (907 kg) or more. All EMT conduit of 2-in. nominal diameter and smaller is sub-bundled as listed in the following table. Before it is packaged, all sub-bundles are secured with either bands or tape. All packages are secured with tension ties. See 10.4.1 for number of ties.

| Nominal Size, in. | Pieces | ft (m) | Weight, lb (kg) |
|---|---|---|---|
| ½ | 10 | 100 (30.5) | 32 (14.5) |
| ¾ | 10 | 100 (30.5) | 49 (22.2) |
| 1 | 10 | 100 (30.5) | 71 (32.2) |
| 1¼ | 5 | 50 (15.2) | 50 (22.7) |
| 1½ | 5 | 50 (15.2) | 59 (26.8) |
| 2 | 3 | 30 (9.1) | 45 (20.4) |

10.4.3 *Rigid Conduit*—This product is normally shipped in packages weighing 2000 lb (907 kg) or more. All rigid conduit of 1½-in. nominal diameter and smaller is sub-bundled as in the following table. Before it is packaged, all sub-bundles are secured with either bands or tape. All packages are secured with tension ties. See 10.4.1 for number of ties.

| Nominal Size, in. | Pieces | ft (m) | Weight, lb (kg) |
|---|---|---|---|
| ½ | 10 | 100 (30.5) | 79 (35.8) |
| ¾ | 5 | 50 (15.2) | 53 (24.0) |
| 1 | 5 | 50 (15.2) | 77 (34.9) |
| 1¼ | 3 | 30 (9.1) | 60 (27.2) |
| 1½ | 3 | 30 (9.1) | 75 (34.0) |

10.4.4 *Standard Pipe, Line Pipe, and Oil Country Goods*—These products in sizes 1½ in. nominal diameter and smaller may be shipped in sub-bundles as shown in Table 5 or in larger lifts as requested. Sub-bundles are secured with soft annealed wire, tape or secured with tension ties. A minimum of two ties are used for lengths 22 ft (6.71 m) or less and a minimum of three ties for lengths over 22 ft. Sub-bundles may be shipped in packages (secured lifts) of up to 10 000 lb (4540 kg). Larger sizes are shipped loose. Thread protectors are used as indicated in Table 6.

10.4.4.1 *Protective Coatings*—Standard pipe, line pipe, and oil country goods are normally protected with a varnish-type coating (see 4.6.4). The purchaser may order the pipe shipped bare or with other coatings.

10.4.5 *Couplings and Fittings*:

10.4.5.1 *Conduit Couplings and Fittings*—These products are generally shipped on wires, in burlap sacks, or corrugated fiberboard cartons, dependent upon quantities. The weight of a carton generally does not exceed 200 lb (91 kg).

10.4.5.2 *Pipe Couplings*—These are generally shipped in either burlap sacks or wooden boxes, dependent upon quantities. The weight of a wooden box generally does not exceed 600 lb (272 kg).



Copyright ASTM International
Reproduced by IHS under license with ASTM
No reproduction or networking permitted without license from IHS
Copyright by ASTM Int'l (all rights reserved);
Reproduction authorized per License Agreement with Kathe Hooper (ASTMIHS Account); Mon Oct 3 12:05:46 EDT 2005
Not for Resale

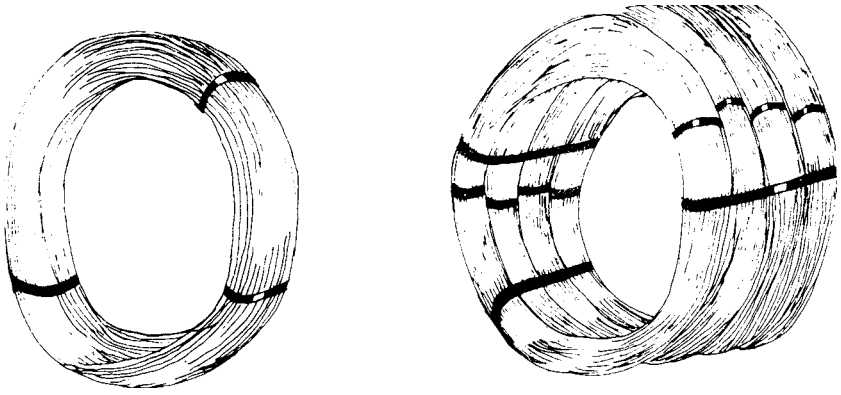

Single Coil Coil Group

**FIG. 20 Coils of Merchant Quality Wire**

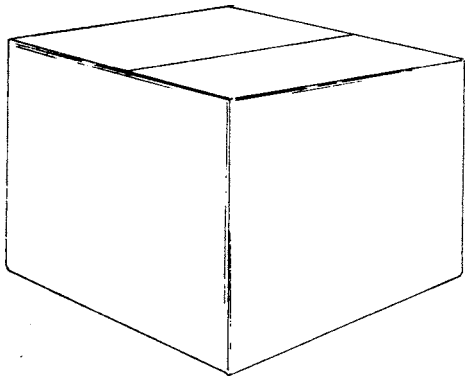

**FIG. 21 Corrugated Box for 50-lb Nails**

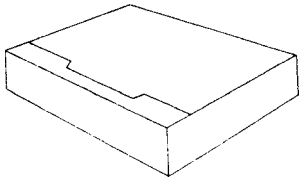

**FIG. 22 Box for 1-lb and 5-lb Nails**

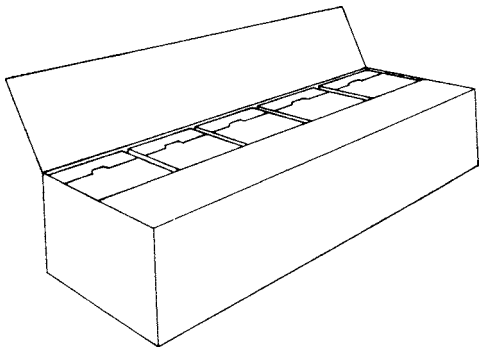

**FIG. 23 Shipping Container for Packaged Nails**

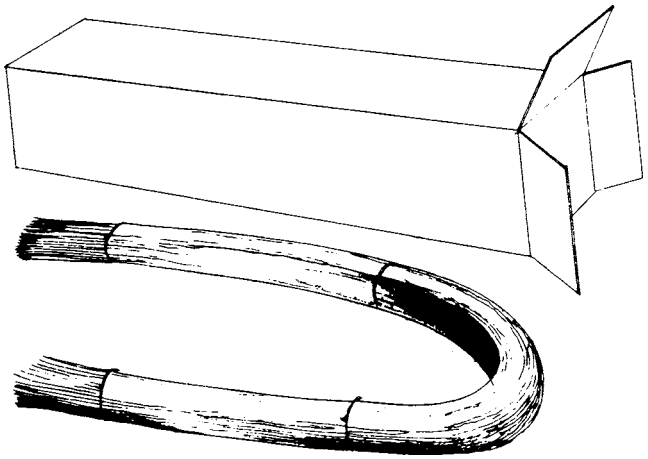

**FIG. 24 Bundle of Wire in Corrugated Box**

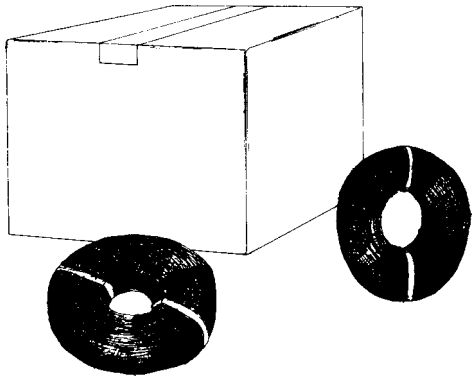

**FIG. 25 Coils of Wire in Corrugated Box**

10.4.5.3 *Pipe Fittings*—These are generally shipped loose, in burlap sacks, in wooden boxes, in corrugated fiberboard cartons, on pallets, and by other acceptable means at the option of the manufacturer.

10.4.6 *Stainless Steel Tubular Products*:

10.4.6.1 Stainless steel tubular products are variously packaged according to product, finish, size, and method of shipment. Stainless steel tubular products are pipe, pressure tubing, mechanical tubing, and structural tubing (including ornamental). Finishes are as-produced (welded or seamless), annealed and pickled, cold finished, ground and polished, and ornamental (including stainless clad). Due to the many sizes, grades, and finishes produced, the purchaser should give careful attention to the packaging, marking, and loading methods when ordering: if in doubt about a suitable method, the purchaser should consult with the supplier.



Copyright ASTM International
Reproduced by IHS under license with ASTM by ASTM Int'l (all rights reserved);
No reproduction or networking permitted without license from IHS Not for Resale
Reproduction authorized per License Agreement with Kathe Hooper (ASTMIHS Account); Mon Oct 3 12:05:46 EDT 2005

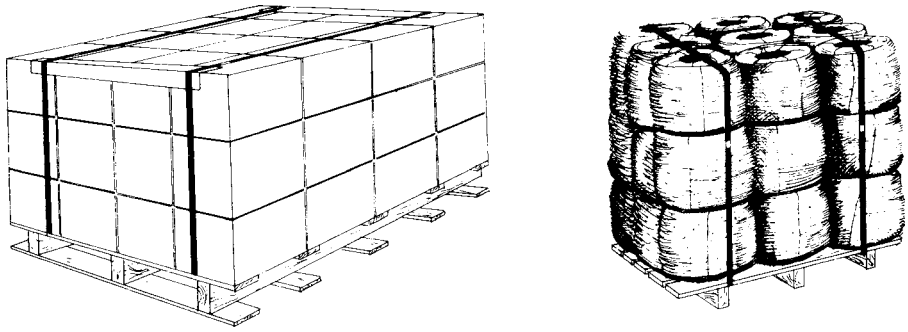

FIG. 26 Typical Palletizing

TABLE 3 Packaging Carbon, Alloy, and Stainless Steel Wire in Coils

| | |
|---|---|
| Single coil | Secured with a minimum of two ties (Fig. 27). |
| Coil group (16 in. (406 mm) inside diameter and larger) | Individually tied coils secured into a unit with minimum of two tensioned flat bands (Fig. 28). |
| Coil carrier[A] | Single or multiple coils on carrier; normally not secured to carrier (Fig. 29). |
| Reel-less coil | Approximate 600 to 1000-lb (272 to 474-kg) coil wound on a fiber core and secured with minimum of three tensioned flat bands; pack eye vertical on wood pallet (Fig. 30 or Fig. 32). |
| Wood rack | Small single coils secured with minimum of two ties nested in rack. Approximate maximum weight 2000 lb (907 kg) (Fig. 31). |
| Fiber drum | Small single coils secured with a minimum of two ties, nested in drum; or a single coil laid loose in drum. Maximum diameter of drum 23 in. (584 mm). Approximate maximum weight 550 lb (249 kg) (Fig. 33 or Fig. 34). Available loose; or palletized on wood pallets, to improve handling (see Fig. 36). |
| Pay-off drum | Single coil laid in drum with a fiber core. Core diameters: 11, 11½ , 13, or 16 in. (279, 292, 330, or 406 mm). Maximum diameter of drum 23 in. (584 mm). Approximate maximum weight 550 lb (249 kg) (Fig. 35). Available loose; or palletized on wood pallets, to improve handling (see Fig. 36). |
| Reel | Single or multiple lengths wound on a reel. Reel size and weight vary by product and manufacturer (Fig. 37). |

[A] List of commonly used sizes of coil carriers:

| Arbor | Base | Height | Tube Diameter and Gage | Identification |
|---|---|---|---|---|
| 11 | 23 | 35 | 1 × 16 | pink |
| *13 | 23 | 35 | 1 × 16 | orange |
| 13 | 32 | 46 | 1¼ × 13 | purple |
| *15 | 32 | 46 | 1¼ × 13 | green |
| *16[nl]P | 36 | 48 | 1¼ × 13 | yellow |
| *18½ | 37 | 46 | 1¼ × 13 | red |
| 20½ | 34 | 46 | 1¼ × 13 | white |
| 22½ | 42 | 46 | 1¼ × 13 | aluminum |
| *22½ | 42 | 46 | 1⅝ × 13 | blue |
| *26 | 50 | 50 | 1⅝ × 13 | brown |
| *30 | 50 | 50 | 1⅝ × 13 | black |

*Preferred sizes.

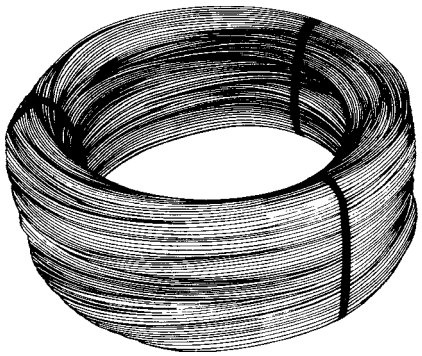

FIG. 27 Single Coil, Bare

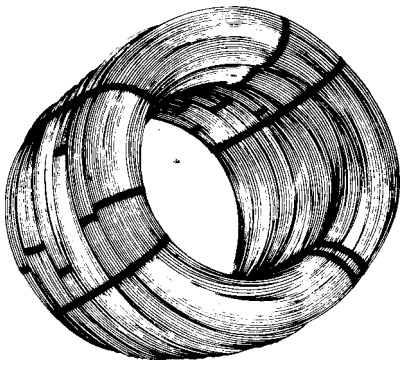

FIG. 28 Coil Group, Bare

10.4.6.2 Stainless steel tubular products are packaged in bundles, boxes, or protective containers. Tubes over 6 in. in outside diameter may be shipped loose. Packages may be wrapped or bare. Length, outside diameter, wall, finish, and method of shipment will determine the most suitable packaging method. Polished tubing is always packed in boxes or containers of wood or other suitable material.

10.4.6.3 *Bundles*—If tubing is shipped in such quantities that a risk of its being bent, crushed, or distorted from handling



Copyright ASTM International
Reproduced by IHS under license with ASTM
No reproduction or networking permitted without license from IHS
Not for Resale
Reproduction authorized per License Agreement with Kathe Hooper (ASTMIHS Account); Mon Oct 3 12:05:46 EDT 2005

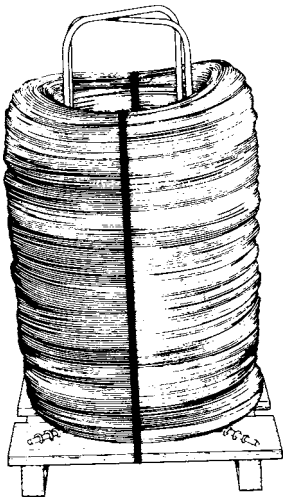

FIG. 29 Single Coil, Bare on Coil Carrier

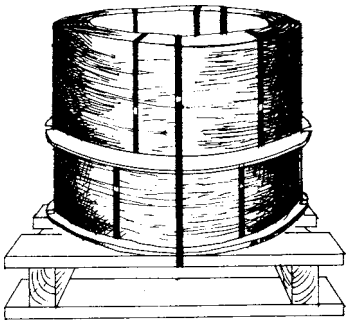

FIG. 30 Reel-less Coils

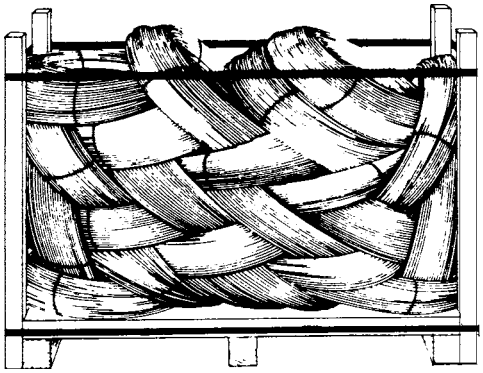

FIG. 31 Coils Nested in Wood Rack

exists, the bundle may require additional support. Bundles are normally secured with flat steel bands but other suitable materials may be used. The amount of securement required is dependent upon length and weight of bundle.

10.4.6.4 *Containers*—Special finishes, quantities ordered, methods of transportation, or other factors may require special containers such as fiberboard or clipboard tubes, fiberboard boxes, wooden boxes or crates, or similar containers.

10.5 *Weather Protection*—Wrapping, shrouding, or covering pipe involves additional labor and material. However, when outside diameter or inside diameter surfaces are critical, shrouding of rail shipments and tarping of trucks is normal practice. Some amount of dirt and oxidation may be expected on black or galvanized pipe and tubes noncoated, or, when coated with nondrying coating, regardless of the type of protection specified.

10.6 *Loading*—Certain steel tubular products are regularly shipped unprotected in open top-cars. It is common practice to load pipe nested without separators, except for external upset pipe and tubing. Consideration should be given to using wood-lined, high-end, bulkheaded, gondola cars for added protection. Securing or separating pipe into lifts, separating sizes and quantities, requires additional handling and material. Loading tubular products in closed cars or closed trucks requires additional handling. Loading small outside diameter pipe on flat cars requires additional labor and material.

## 11. Plates

11.1 *Product Grades*:

11.1.1 Carbon, high-strength low-alloy, and alloy steel plates, cut length.

11.1.2 Carbon and alloy steel plate in coils.

11.1.3 Stainless steel plates.

11.1.4 Floor plates.

11.2 *Marking*—It is normal practice to identify each piece, lift, or coil with those requirements as specified in applicable specifications (ASTM, ASME, and so forth).

11.3 *Packaging and Loading*:

11.3.1 It is regular practice to load carbon, high-strength low-alloy, and alloy steel plates unprotected in open-top equipment. When specified, loading in closed cars requires additional labor and handling. Carbon, high-strength low-alloy, and alloy steel plates are regularly loaded in unsecured lifts. Loading plates in lifts weighing less than 5 tons (4.5 Mg) involves additional labor and handling. The method used to maintain the unity of unsecured lifts is best determined by the shipper's experience. An example of a suitable method is the staggering of lifts. Segregation of sizes and items involves additional handling, often causes congestion in the manufacturer's plant, and may retard production. Such segregation is not considered feasible. The use of special or particular methods of loading or blocking and specifying the use of bands and wire ties to secure lifts disrupts the normal packaging and loading procedures. This requires additional labor and materials.

11.3.2 *Carbon and Alloy Steel Plates in Coils* are secured with a minimum of either one circumferential tie and one eye tie or with two eye ties.

11.3.3 *Stainless Steel Plates*—Packaging requirements of stainless steel plates are determined by the method of transportation, the finish specified, and the dimensions of the plates. Stainless steel hot-rolled and hot-rolled annealed plates are shipped loose, or when specified, in secured lifts and are loaded in open-top equipment. When processed beyond the as-rolled or annealed condition, such as by pickling or blast cleaning, the plates may also be shrouded or tarped if specified on the order or contract. Cold-rolled stainless steel plates may require greater protection such as wrapping or shrouding and the use of skids or platforms. Polished stainless steel plates are boxed when shipped in small quantities. Larger quantities are packaged on skids or platforms and are paper wrapped and may have additional protection when necessary.



Copyright ASTM International
Reproduced by IHS under license with ASTM
No reproduction or networking permitted without license from IHS
Copyright by ASTM Int'l (all rights reserved);
Reproduction authorized per License Agreement with Kathe Hooper (ASTMIHS Account); Mon Oct 3 12:05:46 EDT 2005
Not for Resale

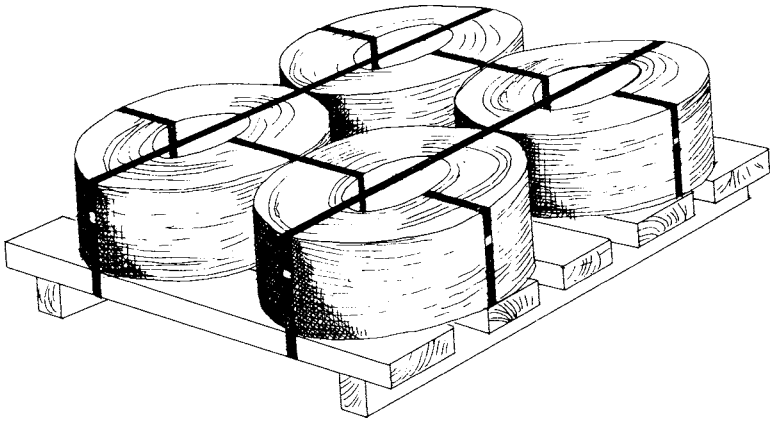

FIG. 32 Reel-less Coils

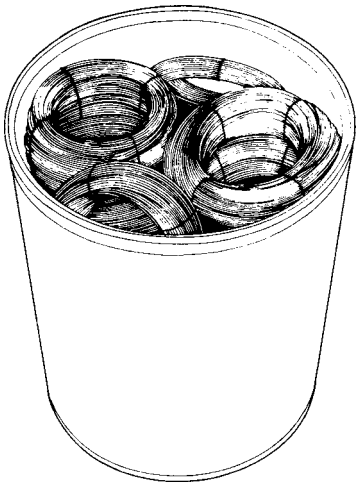

FIG. 33 Coils Nested in Fiber Drum

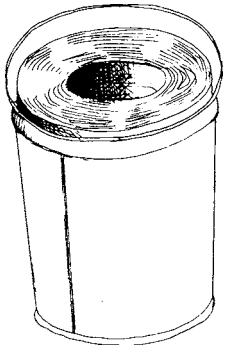

FIG. 34 Coil in Fiber Drum

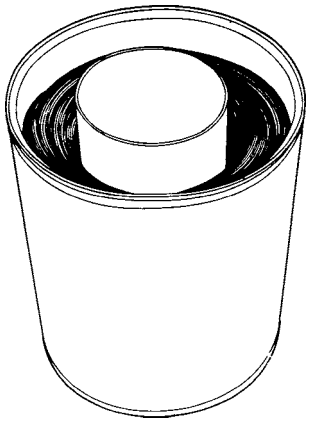

FIG. 35 Single Length Coil in Pay-Off Drum

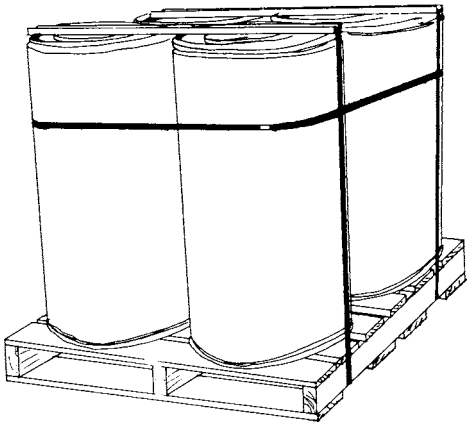

FIG. 36 Palletized Drums

11.3.4 *Floor Plates* are handled in the same manner as carbon and alloy steel plates.

## 12. Sheets and Strip

12.1 Sheets and strip, in cut lengths, coils, and circles, are among the most highly finished products of the steel industry. Because of their nature and the exacting uses to which such products are put, the marking, packaging, and loading methods are very important. The many sizes, grades, and finishes produced require various methods of packaging and loading, along with surface and weather protection. The methods exemplified in this section recognize these general requirements, the end use of the material, the quantity involved, and the methods of transportation. The purchaser should give careful consideration to the marking, packaging, and loading requirements when ordering and, if in question, about a suitable method, should consult with the manufacturer.

12.1.1 *Suitable Lifts*—In order to facilitate handling, the manufacturer generally prepares these products into lifts or packages so that various mechanical handling equipment can be utilized to advantage. The maximum acceptable package



Copyright ASTM International
Reproduced by IHS under license with ASTM
No reproduction or networking permitted without license from IHS
Copyright by ASTM Int'l (all rights reserved);
Reproduction authorized per License Agreement with Kathe Hooper (ASTMIHS Account); Mon Oct 3 12:05:46 EDT 2005
Not for Resale

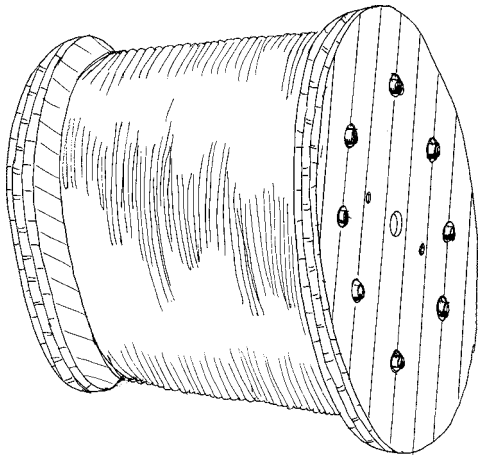

FIG. 37 Wire on Reel

weight should be specified whenever possible, because the heavier packages withstand transportation hazards better and result in greater economy for both the manufacturer and the purchaser. The recommended minimum weight for single lift packages is 10 000 lb (4.5 Mg). Lifts lighter than 10 000 lb require additional labor, material, and handling.

12.1.2 *Skid Arrangements and Platforms*—Figs. 52-59 show packages on skids only, but platforms may be used when required. Suitable arrangements of skids and platforms are covered in 12.5.

12.2 *Product Grades*:

12.2.1 Carbon steels.

12.2.2 Alloy steels.

12.2.3 Electrical steels.

12.2.4 Metallic coated (except in mill products).

12.2.5 Nonmetallic coated.

12.2.6 Painted.

12.2.7 Stainless steels.

12.3 *Marking*—It is normal practice to identify each coil, group of coils, or lift of cut lengths with the following information:

12.3.1 Producer's name, brand, or trademark,

12.3.2 Width and gage or thickness,

12.3.3 Product type,

12.3.4 Weight (except strip, coil),

12.3.5 Customer's name, and

12.3.6 Customer's order number.

Stainless steel coils and cut lengths are also identified with the following:

12.3.7 Finish, and

12.3.8 Heat number or coil number.

12.4 *Packaging*:

12.4.1 *Carbon Steel Sheets, Cut Lengths*:

12.4.1.1 *Bare*—Fig. 60 and Fig. 61 illustrate suitable methods of packaging carbon steel sheets in unsecured lift and secured lift, bare. Hot-rolled carbon steel sheets, not pickled, in heavier gages can be shipped in unsecured lifts as illustrated by Fig. 60 or in secured lifts as illustrated by Fig. 61.

12.4.1.2 *Bare on Skids*—Fig. 52 and Fig. 53 illustrate suitable methods of packaging bare unwrapped carbon steel sheet on lengthwise and crosswise skids for handling with mechanical equipment. When protection of surface is important, packaging bare as illustrated by these methods is not recommended and, when specified, the responsibility for damage due to inadequate protection rests with the purchaser. The customary weight of this package is 10 000 lb (4.5 Mg) or more. Lengthwise skids are not used on sheets over 192 in. (4.88 m) long or less than 22 in. (559 mm) wide.

12.4.1.3 *Covered*—Fig. 54 illustrates a suitable method for covered sheet packages. The bottom of the package is not covered. Sheets lighter than 11 to 16 gage (2.30 to 1.29 mm), inclusive, for shipment in open-top equipment may be covered as illustrated by this figure, which requires additional labor and material. This type of packaging is not used for highly finished sheets for shipment in open-top equipment.

12.4.1.4 *Wrapped*—Fig. 55 illustrates a suitable method of wrapping sheet packages. Hot-rolled pickled, and other more highly finished sheets, for shipment in open-top equipment may be wrapped as illustrated by this figure.

12.4.1.5 *Multiple Lift*—Fig. 56 illustrates a method of packaging two or more smaller lifts into a secured lift. This method, because of the higher center of gravity of the unit and a tendency for the wood separators to mark the steel, is less desirable than the conventional single lift of 10 000 lb (4.5 Mg). Such packaging requires additional labor and materials. Separators are usually from 1 to 2 in. (25 to 51 mm) in thickness and from 2 to 4 in. (51 to 102 mm) wide, aligned with the skids, and extending the full dimension of the sheets. The individual lift weight in this type of package is generally not less than 2000 lb (907 kg), and the total weight of the multiple lift package is usually not less than 10 000 lb. The individual lifts are not tied, covered, or wrapped. Fig. 56 shows lengthwise skids and separators, but crosswise skids and separators may be used.

12.4.1.6 *Short-Length or Narrow-Width Sheets, Crosswise*—Fig. 57 illustrates a suitable method of packaging short length or narrow width sheets arranged crosswise, side by side, into secured lifts. Minimum weight of secured lift for such package is 10 000 lb (4.5 Mg). This package is recommended for short sheets 48 in. (1.22 m) or less in length or narrow sheets under 22 in. (559 mm) in width. Suitable vertical separators between piles are used when required. When handled as a unit lift, this package should be handled with a sheet lifter. Fig. 57 shows material piled on skids. Platforms may also be used when required; however, such packaging requires additional labor and material. Fig. 57 also shows a method of wrapping such a package when protection of steel in open-top equipment requires it to be fully wrapped.

12.4.1.7 *Short-Length Sheets, Lengthwise, End to End*—Fig. 58 illustrates a suitable method of packaging short-length sheets arranged lengthwise end to end into secured lifts. This package is generally not used for sheets under 22 in. (559 mm) in width; otherwise, the method of packaging is similar to that shown for short length or narrow width sheets, crosswise, Fig. 57. When handled as a unit lift, this package should be handled with a sheet lifter. Fig. 59 illustrates a suitable method of packaging narrow long sheets side by side.

12.4.1.8 *Protective Materials*—Hot-rolled pickled and better grades may require protection from contact with separator



Copyright ASTM International
Reproduced by IHS under license with ASTM
No reproduction or networking permitted without license from IHS
by ASTM Int'l (all rights reserved);
Reproduction authorized per License Agreement with Kathe Hooper (ASTMIHS Account); Mon Oct 3 12:05:46 EDT 2005
Not for Resale

**TABLE 4 Packaging Table for Carbon, Alloy, and Stainless Steel Wire, Straightened and Cut Lengths[A]**

| Length, in. (mm) | Package | Approximate Weight, lb (kg) | |
|---|---|---|---|
| | | Bundle/Lift | Package |
| 12 (305) and under | loose in corrugated box (Fig. 38) | ... | 125 (57) max |
| Over 12 to 36 (305 to 914), incl | loose in container (Fig. 47) | ... | 1500 to 1800 (680 to 816) |
| Over 12 to 18 (305 to 457), incl | hand bundles | 25 to 50 (11 to 23) | ... |
| Over 18 to 36 (457 to 914), incl | hand bundles | 50 to 100 (23 to 45) | ... |
| | in containers (Fig. 47) | ... | 1500 to 1800 (680 to 816) |
| | on skids | ... | 2000 (907) |
| | on platform (Fig. 44) | ... | 2000 (907) |
| Over 36 (914) | hand bundles (Fig. 39) | | |
| | loose | 100 to 200 (45 to 91) | ... |
| | secured lifts (Fig. 43) | 4000 to 6000 (1814 to 2722) | ... |
| Over 36 to 96 (914 to 2438) | secured lift (Fig. 42) | 2000 to 4000 (907 to 1814) | ... |
| Over 96 (2438) | secured lift | 4000 to 6000 (1814 to 2722) | ... |

*Securement*—The number of bands or wire ties depends upon the length and weight of the lift or bundle, or both, as follows:

| Length, ft (m) | Number of Ties |
|---|---|
| 8 (2.44) and under | 2 |
| Over 8 to 16 (2.44 to 4.88), incl | 3 |
| Over 16 to 20 (4.88 to 6.10), incl | 4 |
| Over 20 (6.10) | 5 |

*Protection*[A]—Where protection is required, wire may be packaged as follows:

| Package | Protection |
|---|---|
| Hand bundles | Ends wrapped (Fig. 40) |
| Hand bundles | Wrapped entire length (Fig. 41) |
| Lifts | Shrouded (Fig. 45) |
| Lifts | Wrapped (Fig. 46) |
| Loose or hand bundles | Special containers constructed of fiberboard, chipboard, wood, or other suitable material. Containers are to be lined when required (Fig. 47). |

[A] Some manufacturers determine type of packaging and protection by gage and other factors, and these should be considered in ordering.

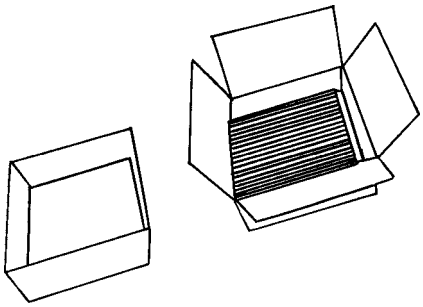

**FIG. 38 Short Lengths of Straightened and Cut Wire in Corrugated Box**

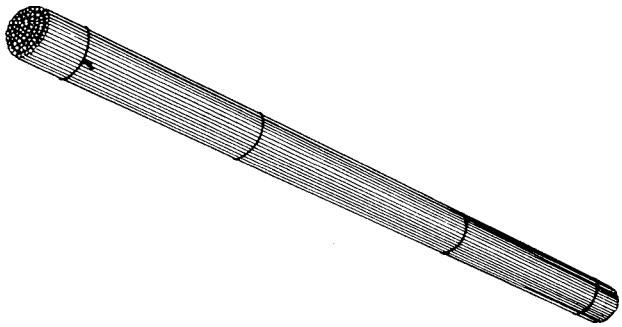

**FIG. 39 Hand Bundle of Wire, Bare**

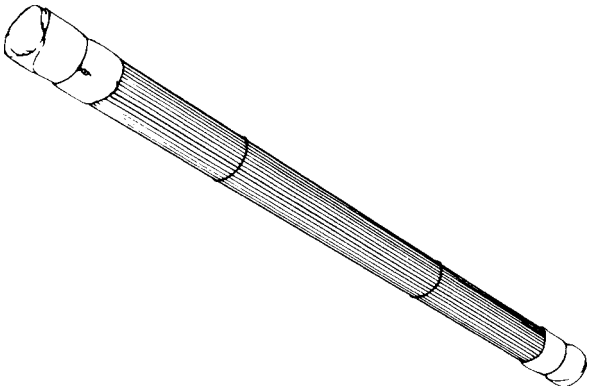

**FIG. 40 Hand Bundle of Wire, Ends Wrapped**

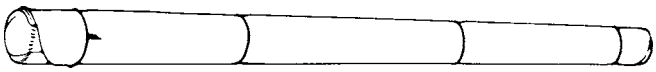

**FIG. 41 Hand Bundle of Wire, Wrapped Entire Length**

or skid lumber. Wrapping sheets with more than one layer of paper requires additional labor and materials. On highly finished sheets, protection against band seal damage is recommended. Protecting sheets with metal wrapping, or the use of metal protector sheets on top or bottom, or both, of lift or package involves additional labor and material.

12.4.1.9 *Protective Coatings*—Oiling to customers' specifications requires additional labor and material.

12.4.1.10 *Weather Protection*:

*(1) Open-Top Equipment, General*—Experience has shown that the amount of weather protection required for shipping



Copyright ASTM International
Reproduced by IHS under license with ASTM
No reproduction or networking permitted without license from IHS
Copyright by ASTM Int'l (all rights reserved);
Reproduction authorized per License Agreement with Kathe Hooper (ASTMIHS Account); Mon Oct 3 12:05:46 EDT 2005
Not for Resale

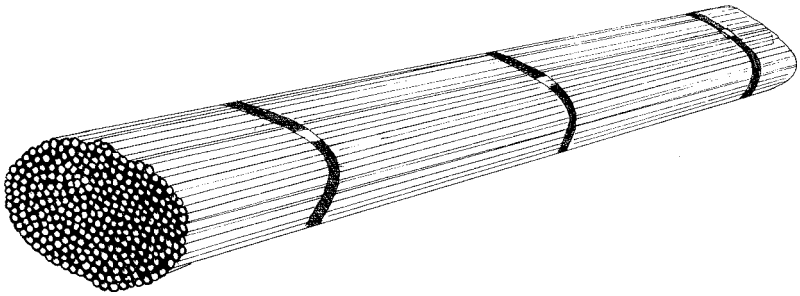

FIG. 42 Secured Lift of Wire, Bare

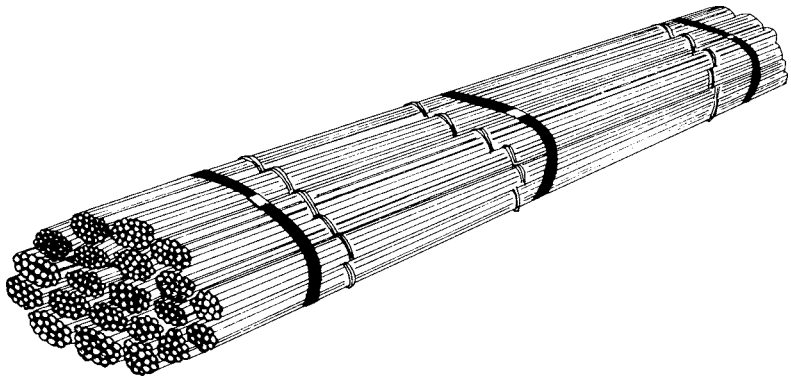

FIG. 43 Secured Lift of Hand Bundles of Wire, Bare

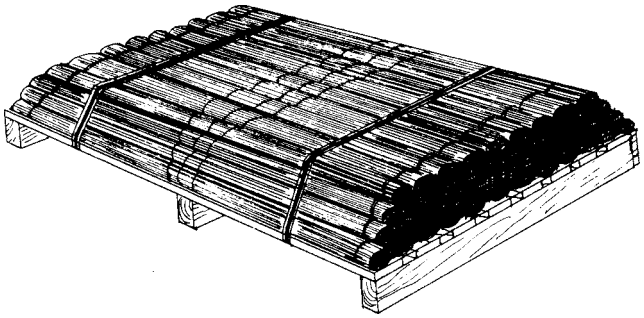

FIG. 44 Hand Bundles of Wire, Secured to Skids or Platforms

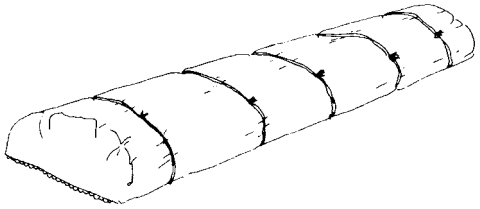

FIG. 45 Shrouded Lift of Wire

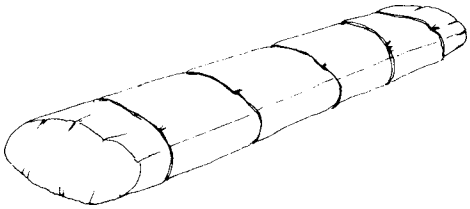

FIG. 46 Wrapped Lift of Wire

sheets in open-top equipment depends upon the quality, size, and method of transportation. Hot-rolled sheets, due to their nature, are not generally protected from the weather when loaded in open-top equipment. Hot-rolled pickled and more highly finished sheets are regularly wrapped and shrouded when loaded on open-top equipment. Such wrapping and shrouding requires additional labor and material. Truck tarpaulins are considered to be the equivalent of waterproof paper shrouding.

*(2) Shrouded Package Open-Top Equipment*—Fig. 62 and Fig. 63 illustrate suitable methods of shrouding lifts of cut-length sheets for shipment in open-top equipment.

*(3) Covered or Closed Equipment (General)*—While this type of equipment is recommended for rail and affords better protection from the elements, covering, wrapping, or shrouding of sheets may be required for preservation of the surface. Such protection, when specified, requires additional labor and material.

12.4.2 *Carbon Steel Sheets, Coils*:

12.4.2.1 *General*—All coil weights are subject to mill manufacturing limits. When individual coil weights are required, narrow sheet coils are generally weighed in groups and the weight of the group averaged over the number of coils in the group. This average is not intended to be the actual weight of each individual coil of the group. Weighing such coils individually, recording, and marking the weight of each coil requires additional time and handling. Individual coils are



Copyright ASTM International
Reproduced by IHS under license with ASTM
No reproduction or networking permitted without license from IHS
Copyright by ASTM Int'l (all rights reserved);
Reproduction authorized per License Agreement with Kathe Hooper (ASTMIHS Account); Mon Oct 3 12:05:46 EDT 2005
Not for Resale

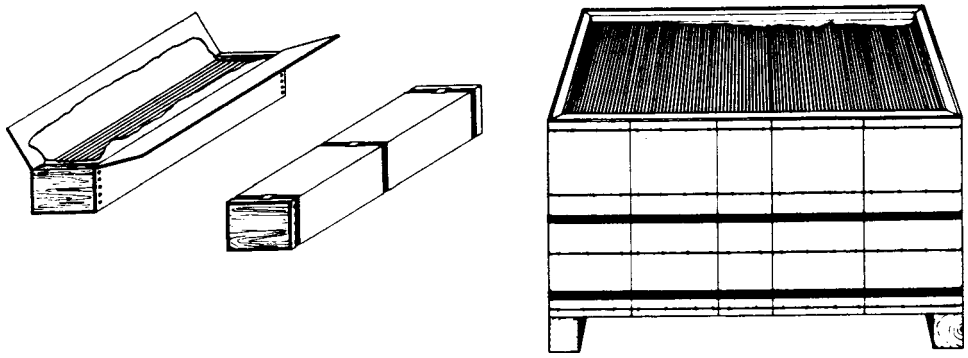

FIG. 47 Loose or Hand Bundles of Wire in Containers

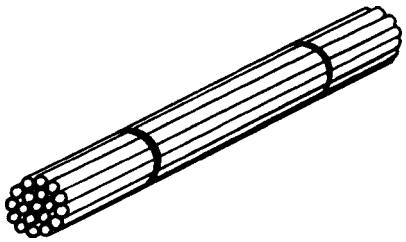

FIG. 48 Secured Lift

usually secured with one to four flat steel bands. Hot-rolled coils are regularly shipped in the as-rolled condition, unprotected, in open-top equipment. It is not standard practice to ship hot-rolled coils on platforms. Hot-rolled pickled or other highly finished sheet coils may be packaged on platforms when required. However, the use of platforms requires additional labor and material. Supporting coils with special cores, or placing coils on spools, requires additional labor and material. Wrapping narrow coils individually requires additional labor and material.

12.4.2.2 *Bare, Unwrapped, Individual Coils*—Fig. 64 illustrates a suitable method of packaging individual hot-rolled sheet coil in the as-rolled condition. Fig. 65 illustrates a method of packaging often used on more highly finished coils.

12.4.2.3 *Bare, Unwrapped, Coil Group Package*—Fig. 66 illustrates a suitable method of packaging two or more narrow sheet coils into a coil group package. Securing sheet coils into specified groups requires additional labor and material.

12.4.2.4 *Coils, Bare Unwrapped, on Platform*—Fig. 67 illustrates a suitable method of packaging bare unwrapped sheet coils on skeleton platform with the eye of the coils vertical. The use of separators between coils requires additional labor and material.

12.4.2.5 *Wrapped Individual Coil*—Fig. 68 illustrates a suitably wrapped individual sheet coil with eye of the coil horizontal. Wrapping coils requires additional labor and material.

12.4.2.6 *Wrapped Individual Coil on Cradle Platform*—Fig. 69 illustrates a suitably wrapped individual coil on cradle platform with the eye of the coil horizontal.

12.4.2.7 *Wrapped Individual Coil on Platform*—Fig. 70 illustrates a suitably wrapped individual coil on platform with the eye of the coil vertical.

12.4.2.8 *Surface Protection*:

*(1) Oiling*—Oiling coils to customer's specifications requires additional labor and material.

12.4.3 *Circles*:

12.4.3.1 *General*—Fig. 71 illustrates suitably wrapped or covered sheet circles on skeleton platform. Circles 17 in. (432 mm) and over in diameter are packaged single pile on square or round platforms, or on crossed skids. To avoid top heaviness, the maximum height of the single pile package should not exceed the diameter of the circle. Circles under 17 in. in diameter may be packaged in several piles on square or rectangular platforms.

12.4.3.2 *Weather Protection*:

*(1)* Hot-rolled pickled and more highly finished sheet coils are regularly wrapped and shrouded when loaded in open-top equipment. Such wrapping and shrouding requires additional labor and material. Truck tarpaulins are considered to be the equivalent of waterproof paper shrouding.

*(2) Covered or Closed Equipment (General)*—While this type of equipment affords better protection from the elements, covering, wrapping, or shrouding of sheets may be required for preservation of the surface. Such protection, when specified, requires additional labor and material.

12.4.3.3 *Loading*:

*(1) Open-Top Equipment (General)*—Hot-rolled sheet coils, due to their nature, are not generally protected from the weather when loaded in open-top equipment.

12.4.4 *Stainless Steel Sheets, Cut Lengths*:

12.4.4.1 *General*—The minimum net weight for conventional single-lift packages of stainless sheets depends on the type of package specified. Small amounts regardless of finish are regularly packaged in boxes.

12.4.4.2 *Cut Lengths, Bare*—Fig. 52 and Fig. 53 illustrate suitable methods of packaging bare, unwrapped, stainless steel sheets on lengthwise and crosswise skids. The figures show the package on skids only, but skeleton deck platforms are also used when required. The recommended weight for this type package is 5000 lb (2268 kg) or more. Finishes and gages generally confined to this type of package are:

*(1)* No. 1 Finish, 0.0418 in. (1.062 mm) and thicker, on skids.

*(2)* No. 1 Finish, under 0.0418 in. (1.062 mm), on skeleton platforms.

When protection of surface is important, packaging bare, as illustrated by these methods, is not recommended. Suitable



Copyright ASTM International
Reproduced by IHS under license with ASTM
No reproduction or networking permitted without license from IHS
Not for Resale
Reproduction authorized per License Agreement with Kathe Hooper (ASTMIHS Account); Mon Oct 3 12:05:46 EDT 2005

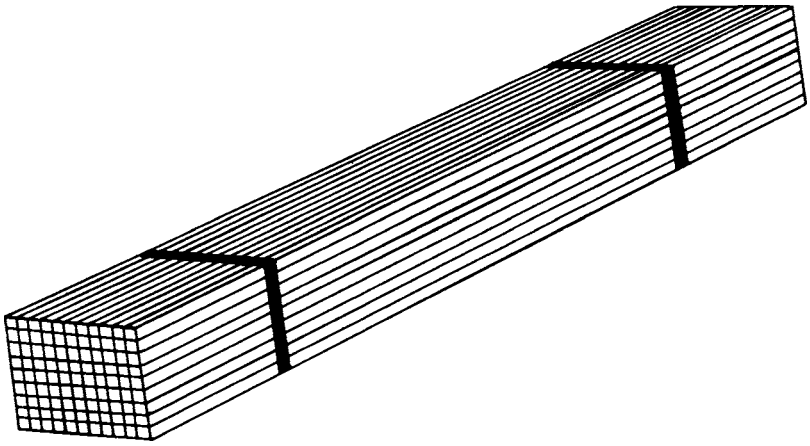

FIG. 49 Rectangular Package

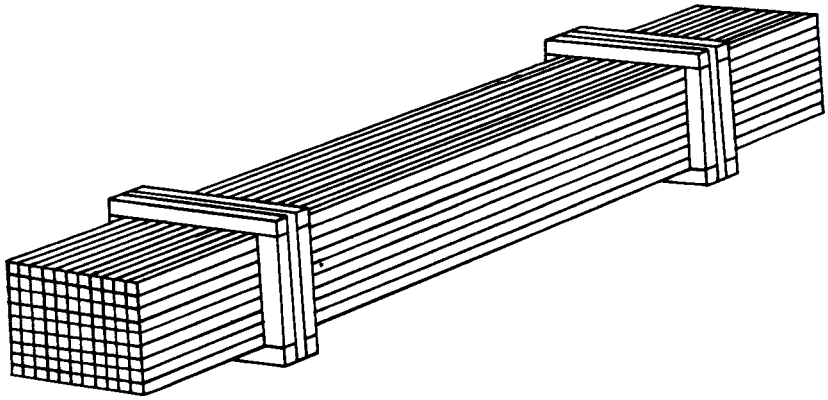

FIG. 50 Frame Package

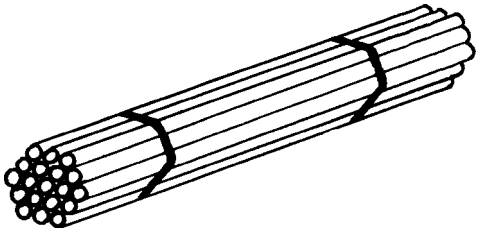

FIG. 51 Hexagonal Package

**TABLE 5 Pieces, Feet, and Weight per Sub-bundle for Standard Pipe, Line Pipe, and Oil Country Goods[A]**

| Nominal Size, in. | Pieces | ft (m) | Weight, lb (kg) |
|---|---|---|---|
| ⅛ | 30 | 630 (192) | 151 (69) |
| ¼ | 24 | 504 (154) | 212 (96) |
| ⅜ | 18 | 378 (115) | 215 (98) |
| ½ | 12 | 252 (77) | 214 (97) |
| ¾ | 7 | 147 (45) | 166 (75) |
| 1 | 5 | 105 (32) | 176 (80) |
| 1¼ | 3 | 63 (19) | 144 (65) |
| 1½ | 3 | 63 (19) | 172 (78) |
| Extra Strong Pipe: | | | |
| ⅛ | 30 | 630 (192) | 195 (89) |
| ¼ | 24 | 504 (154) | 272 (123) |
| ⅜ | 18 | 378 (115) | 280 (127) |
| ½ | 12 | 252 (77) | 275 (125) |
| ¾ | 7 | 147 (45) | 216 (98) |
| 1 | 5 | 105 (32) | 228 (104) |
| 1¼ | 3 | 63 (19) | 189 (86) |
| 1½ | 3 | 63 (19) | 229 (104) |
| Double Extra Strong Pipe: | | | |
| ½ | 7 | 147 (45) | 251 (114) |
| ¾ | 5 | 105 (32) | 256 (116) |
| 1 | 3 | 63 (19) | 230 (104) |
| 1¼ | 3 | 63 (19) | 328 (149) |
| 1½ | 3 | 63 (19) | 404 (184) |

[A] Other bundling practices may be available, subject to agreement between the purchaser and the manufacturer.

arrangements of skids and platforms are shown by Fig. 52 to 60 and Table 7 and Table 8.

12.4.4.3 *Cut Lengths, Wrapped*—Fig. 72 and Fig. 73 illustrate suitably wrapped stainless steel sheets on lengthwise and crosswise skids. The illustrations show the package on skids only, but skeleton deck platforms are also used when required. Skeleton deck platforms may have either lengthwise or crosswise runners. The customary weight of this type package is 5000 lb (2268 kg) or more. Finishes and gages generally confined to this type of package are:

*(1)* No. 1 Finish, 0.0418 in. (1.062 mm) and thicker, on skids.

*(2)* No. 1 Finish, under 0.0418 in. (1.062 mm) on skeleton platforms.

When protection of surface is important, wrapped packages, as illustrated by these methods, are not recommended. Suitable arrangements of skids and platforms are shown in Fig. 52 to Fig. 59 and Table 7 and Table 8.



Copyright ASTM International
Reproduced by IHS under license with ASTM
No reproduction or networking permitted without license from IHS
Copyright by ASTM Int'l (all rights reserved);
Reproduction authorized per License Agreement with Kathe Hooper (ASTMIHS Account); Mon Oct 3 12:05:46 EDT 2005
Not for Resale

**TABLE 6 Thread Protection for Standard Pipe, Line Pipe, and Oil Country Goods**

| Types of Pipe | Nominal Size | | |
|---|---|---|---|
| | 1½ in. and Smaller | 2 to 3½ in., incl | 4 in. and Over |
| Standard pipe | none | none | threads protected[A] |
| Standard pipe, reamed and drifted | none | threads protected[A] | threads protected[A] |
| Line pipe | threads protected[B] | threads protected[A] | threads protected[A] |
| Oil country pipe | threads protected[C] | threads protected[D] | threads protected[D] |

[A] Thread protectors are used on pipe threads not protected by a coupling.
[B] Either burlap cloth or waterproof paper is used to wrap the ends of sub-bundles or lifts, or thread protectors are used to protect exposed threads.
[C] Burlap cloth or waterproof paper is used to wrap the end of sub-bundles or lifts to protect the exposed threads.
[D] Thread protectors are used on pipe threads not protected by a coupling. The exposed coupling threads are protected with either a protective coating or thread protectors.

12.4.4.4 *Cut Lengths, Fully Enclosed Packages 5000 lb (2268 kg) and Heavier*—Fig. 74 illustrates a suitable method of packaging steel sheets in a fully enclosed package on a skeleton platform, using wood materials. Other materials used are hardboard, composition board, fiberboard, plywood, angles and channels, depending on the materials available, the type of package, and the discretion of the shipper. This package is designed for lifts 5000 lb and over, and is recommended for maximum protection of all domestic shipments of all gages and finishes. Sideboards are not usually needed if material is less than 1 in. (25 mm) piling height.

12.4.4.5 *Cut Lengths, Boxed*—Fig. 75 illustrates a suitable method of packaging steel sheets in a wooden box of suitable solid protective material to provide an entirely closed flat container. This type container is designed for maximum protection of small quantities of all grades, gages, and finishes.

12.4.4.6 *Surface Protection*:

*(1) Protective Coverings*—The usual method of protecting surfaces is to interleave with nonabrasive antitarnish paper. Protection of surfaces by means of gluing or pasting paper or otherwise applying protective coverings requires additional labor and material. Protecting sheets with metal wrapping or the use of metal protector sheets on top or bottom, or both, of lift or package requires additional labor and material.

12.4.5 *Stainless Steel Sheets, Coils*:

12.4.5.1 *Bare Unwrapped Individual Coil*—Fig. 64 illustrates a suitable method of packaging individual stainless steel hot-rolled sheet coil in the as-rolled condition. This type of packaging is confined to hot-rolled or hot-rolled annealed material.

12.4.5.2 *Wrapped Individual Coil*—Fig. 68 illustrates a suitable method of packaging fully wrapped individual stainless steel sheet coil with eye of coil horizontal. This type of packaging is not recommended for light gage material or for any material when protection of the surface is important. Stainless steel coils, No. 1 Finish, 0.062 in. (1.57 mm) and thicker, are generally confined to this type of package. For thinner gages, platforms are recommended.

12.4.5.3 *Bare Individual Coil on Cradle Platform*—Fig. 76 illustrates a suitable method of packaging bare, unwrapped, individual stainless steel sheet coil on cradle platform with the eye of the coil horizontal. This method of packaging provides adequate protection for most grades and gages, when surface protection is not important.

12.4.5.4 *Wrapped Individual Coil on Cradle Platform*—Fig. 69 illustrates a suitable method of packaging a wrapped individual stainless steel coil on a cradle platform with the eye of the coil horizontal. This method of packaging is recommended for practically all domestic usage and for most finishes and gages. Gages and finishes requiring additional protection should be boxed.

12.4.5.5 *Bare Individual Coil on Platform*—Fig. 77 illustrates a suitable method of packaging bare unwrapped individual sheet coil on platform with the eye of the coil vertical. This method of packaging provides adequate protection for most grades and gages, when surface protection is not important.

12.4.5.6 *Wrapped Individual Coil on Platform*—Fig. 70 illustrates a suitably wrapped individual stainless steel coil on platform with the eye of the coil vertical. This method of packaging provides adequate protection for most grades and gages.

12.4.5.7 *Boxed on Platform with Eye of Coil Vertical*—Fig. 78 illustrates a suitable method of packaging individual sheet coil or group of sheet coils in solid box, on platform, with the eye of the coil vertical. This type of package, an entirely enclosed container made of suitable solid material, is recommended for maximum protection of all finishes and gages.

12.4.5.8 *Surface Protection*:

*(1) Protective Coatings*—The usual method of protecting surfaces is to interleave with nonabrasive antitarnish paper. Protection of surfaces by means of gluing or pasting paper, or otherwise applying protective coverings, requires additional labor and material. Spiral wrapping is not applied to stainless steel sheet coils. The use of metal protective wrapping on coils requires additional labor and material.

12.4.6 *Stainless Steel Sheets, Circles*:

12.4.6.1 *Circles, Bare Unwrapped Single Pile on Platform*—Fig. 79 illustrates a suitable method of packaging a single pile of bare stainless steel sheet circles on skeleton platform. This type of packaging is generally confined to No. 1 Finishes 0.062 in. (1.57 mm) and thicker. This package is not recommended for light gage material or for any material when protection of surface is important.

12.4.6.2 *Circles, Wrapped Single Pile on Platform*—Fig. 71 illustrates a suitable method of packaging wrapped stainless steel sheet circles on skeleton platform. This type of package is generally recommended for practically all domestic usage, for all gages and finishes.

12.4.6.3 *Circles, Multiple Piles on Platform, Covered with Corrugated Fiberboard*—Fig. 80 illustrates a typical method of packaging multiple piles of stainless steel circles on platforms, covered with corrugated fiberboard. This type of package is generally recommended for practically all domestic usage and for all gages and finishes in lots of 2000 lb (907 kg) or more. Quantities less than 2000 lb should be packaged in individual piles or in boxes.



Copyright ASTM International
Reproduced by IHS under license with ASTM
No reproduction or networking permitted without license from IHS
by ASTM Int'l (all rights reserved);
Reproduction authorized per License Agreement with Kathe Hooper (ASTMIHS Account); Mon Oct 3 12:05:46 EDT 2005
Not for Resale

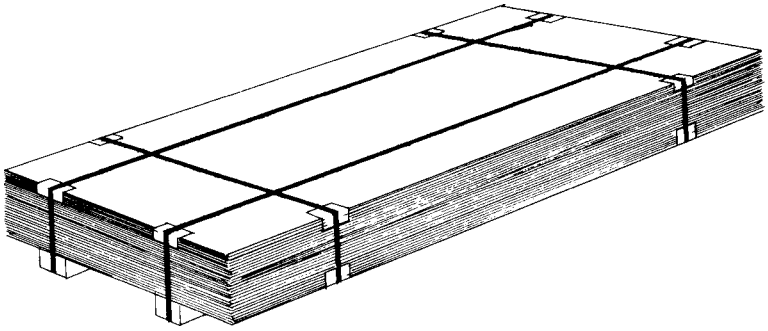

FIG. 52 Bare Package on Lengthwise Skids

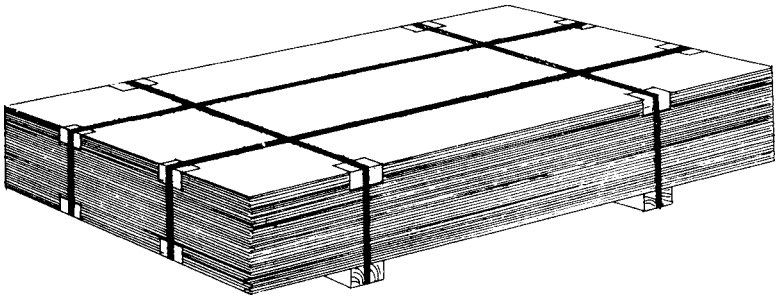

FIG. 53 Bare Package on Crosswise Skids

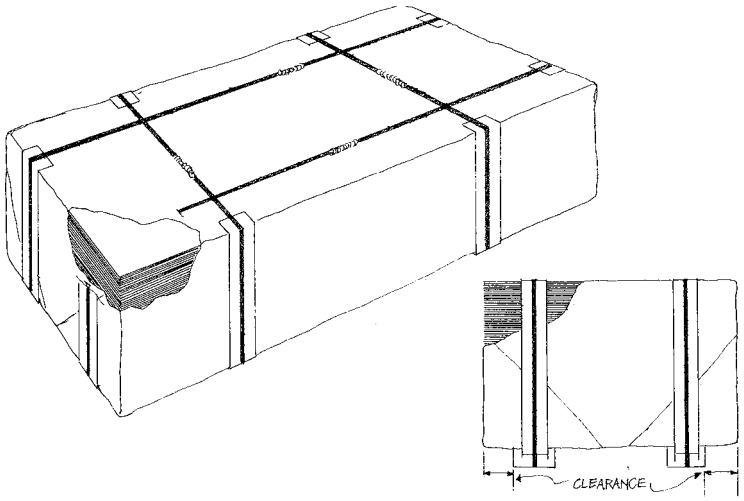


FIG. 54 Covered Package on Skids

12.4.6.4 *Boxes Wrapped Multiple Piles of Circles on Platform*—Fig. 81 illustrates a suitable method of packaging multiple piles of stainless steel sheet circles in a box on a solid deck platform.

12.4.6.5 *Surface Protection*:

*(1) Protective Coverings*—The usual method of protecting surfaces is to interleave with nonabrasive antitarnish paper. Protection of surfaces by means of gluing or pasting paper, or otherwise applying protective coverings, requires additional labor and material.

12.4.6.6 *Loading*—Due to the nature of stainless products, shipment in covered or closed equipment is recommended. If shipped in open-top equipment, shrouding of the package or load is recommended.

12.4.7 *Carbon Steel Strip, Cut Lengths*:

12.4.7.1 *Bare Oval Lift*—Fig. 3 illustrates a suitable method of packaging narrow hot-rolled steel strip, 5 in. (127 mm) or less in width, into conventional oval lifts.

12.4.7.2 *Secured Lift, Strip Lengthwise*—Fig. 59 illustrates a suitable method of packaging narrow steel strip piled lengthwise on crosswide skids, in multiple rows, into secured lift. The illustration shows material piled on skids, but skeleton platforms are also used when required. Such packaging requires additional labor and material. Light-gage reinforcing shields or channels are used to maintain alignment of strip in the piles. Fig. 59 also shows the method of wrapping packages when protection of steel is required for shipping in open-top equipment.

12.4.7.3 *Surface Protection*:



Copyright ASTM International
Reproduced by IHS under license with ASTM
No reproduction or networking permitted without license from IHS
Not for Resale
Reproduction authorized per License Agreement with Kathe Hooper (ASTMIHS Account); Mon Oct 3 12:05:46 EDT 2005

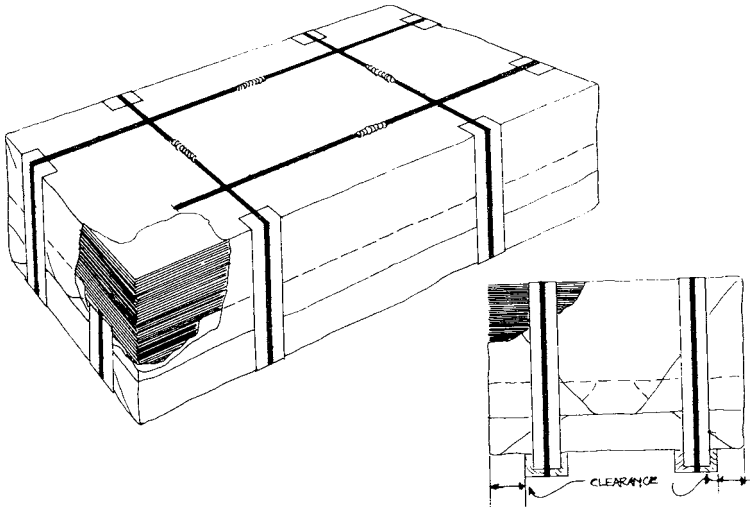


**FIG. 55 Wrapped Package on Skids**

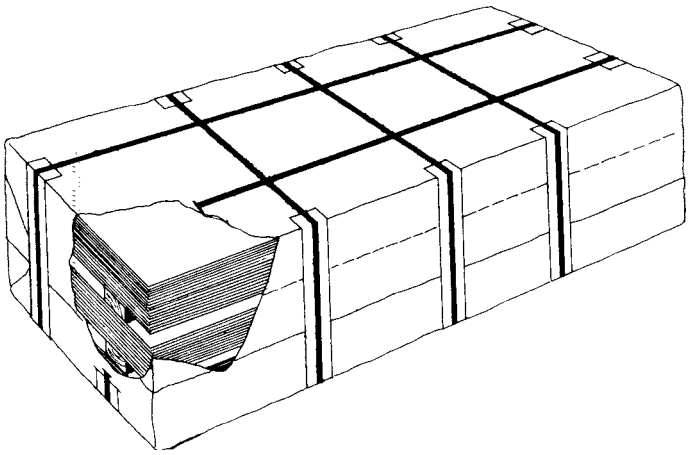

**FIG. 56 Multiple-Lift Package on Skids**

*(1) Oiling*—Oiling to customer's specifications requires additional labor and material.

*(2) Protective Coverings*—Wrapping strip with more than one layer of paper has been found unnecessary for satisfactory delivery.

12.4.7.4 *Loading*:

*(1) Open-Top Equipment, General*—Hot-rolled strip, due to its nature, is not protected from the weather when loaded in open-top equipment. It is recommended that hot-rolled pickled and more highly finished strip be covered or shrouded when loaded in open-top equipment. When specified, such protection requires additional labor and material. Truck tarpaulins are considered to be the equivalent of waterproof paper shrouding.

*(2) Covered or Closed Equipment, General*—While this type of equipment affords better protection from the elements, covering, wrapping, or shrouding of strip may be required for preservation of the surface. Such protection, when specified, requires additional labor and material.

12.4.8 *Carbon Steel Strip, Coils*:

12.4.8.1 *General*—All coil weights are subject to mill manufacturing limits. When individual coil weights are required, coils are generally weighed in groups, and the weight of the group averaged over the number of coils in the group. This average is not intended to be the actual weight of each individual coil of the group. Weighing coils individually, recording, and marking the weight of each coil require additional time and handling. Individual coils are usually secured with one to four flat steel bands. Hot-rolled coils are regularly shipped in the as-rolled condition, unprotected, in open-top equipment. It is not regular practice to ship hot-rolled coils on platforms. When specified, the use of platforms requires additional labor and material. Supporting coils with special cores or placing coils on spools requires additional labor and material.

12.4.8.2 *Individual Narrow Strip Coils*—Fig. 82, Fig. 83, and Fig. 84 illustrate suitable methods of packaging individual narrow-strip coils.

12.4.8.3 *Bare Unwrapped Coil Group Package*—Fig. 85 illustrates a suitable method of packaging narrow-strip coils into a coil group package. Banding coils into coil group package requires additional labor and material.

12.4.8.4 *Coils on Platforms*—Fig. 86 illustrates a suitable method of packaging narrow-strip coils on skeleton platform with the eye of the coils vertical. The illustration shows the package on skeleton platform. Placing individual coils or stacking coils on platforms requires additional labor and material. Separators between coils decrease the security of the package, and requires additional labor and material.

12.4.8.5 *Coils Wrapped*—Fig. 87 illustrates suitably wrapped individual strip coils or groups of coils. Wrapping individual coils or wrapping or shrouding coil group packages requires additional labor and material.

12.4.8.6 *Bare Coils in Container*—Fig. 88 illustrates a suitable method of packaging narrow-strip coils in a container with the eye of the coils vertical. This type of package is an entirely enclosed container made of suitable solid materials, and is designed for maximum protection of all finishes and gages.

12.4.8.7 *Surface Protection*:

*(1) Oiling*—Oiling coils to customer's specifications requires additional labor and material.

*(2) Protective Coverings*—Wrapping coils requires additional labor and material. Wrapping individual coils or groups



Copyright ASTM International
Reproduced by IHS under license with ASTM
No reproduction or networking permitted without license from IHS
Copyright by ASTM Int'l (all rights reserved);
Reproduction authorized per License Agreement with Kathe Hooper (ASTMIHS Account); Mon Oct 3 12:05:46 EDT 2005
Not for Resale

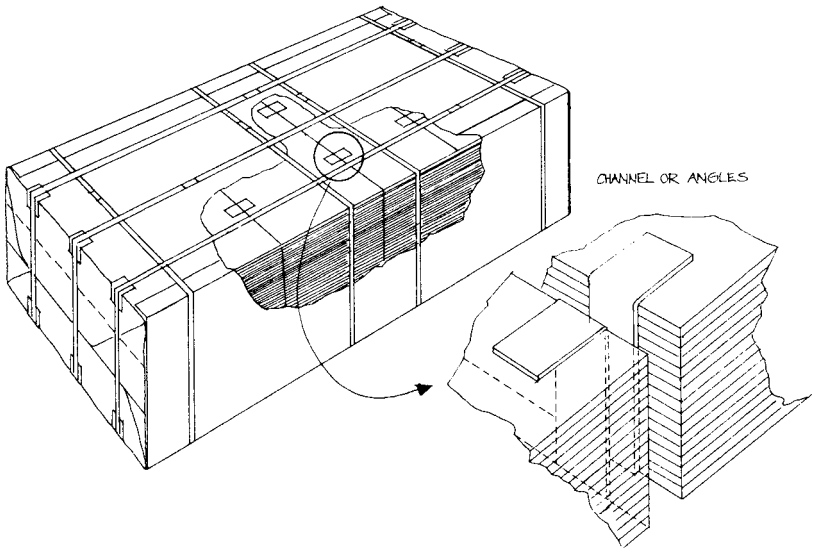


**FIG. 57 Suitable Package for Short-Length or Narrow-Width Sheets on Skids**

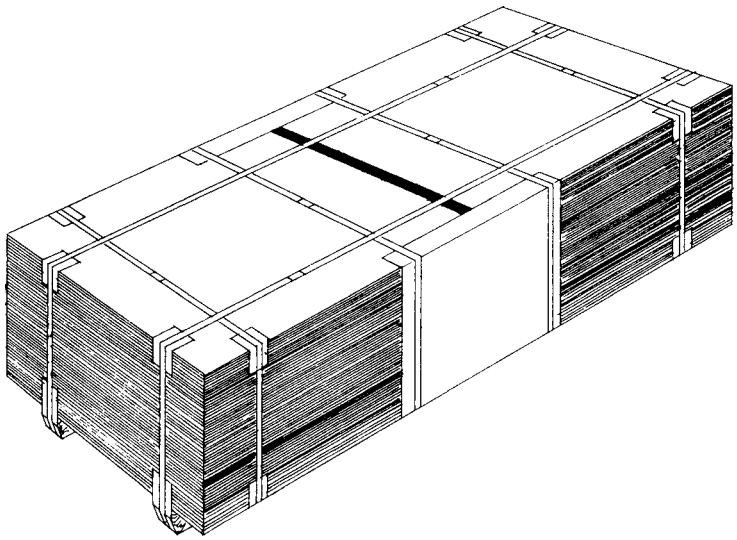

**FIG. 58 Suitable Package for Short-Length Sheets Lengthwise, End to End, on Skids**

of coils with more than one layer of paper has been found unnecessary for satisfactory delivery. The use of metal protective wrapping on coils requires additional labor and material.

12.4.8.8 *Loading*:

*(1) Open-Top Equipment, General*—Hot-rolled strip coils, due to their nature, are not generally protected from the weather when loaded in open-top equipment. It is recommended that hot-rolled pickled and more highly finished strip coils be wrapped or shrouded when loaded in open-top equipment. Truck tarpaulins are considered to be the equivalent of waterproof paper shrouding.

*(2) Closed Equipment, General*—While this type of equipment affords better protection from the elements, wrapping or shrouding of strip may be required for preservation of the surface. Such protection, when specified, requires additional labor and material.

12.4.9 *Stainless Steel Strip, Cut Lengths*:

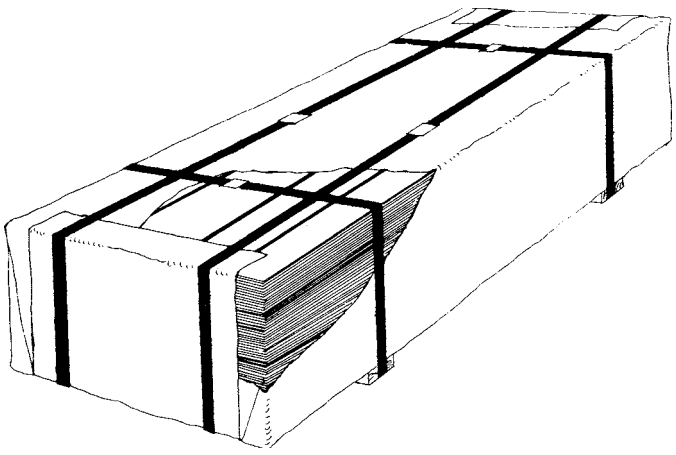

**FIG. 59 Suitable Package for Narrow Long Sheets Side by Side, on Skids**



Copyright ASTM International
Reproduced by IHS under license with ASTM by ASTM Int'l (all rights reserved);
No reproduction or networking permitted without license from IHS Not for Resale.
Reproduction authorized per License Agreement with Kathe Hooper (ASTMIHS Account); Mon Oct 3 12:05:46 EDT 2005

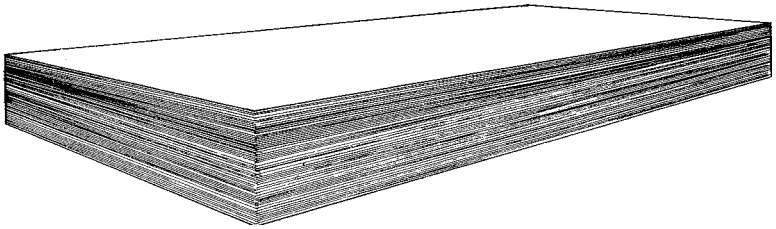

**FIG. 60 Suitable Method of Packaging Carbon Steel Sheets in Unsecured Lift, Bare**

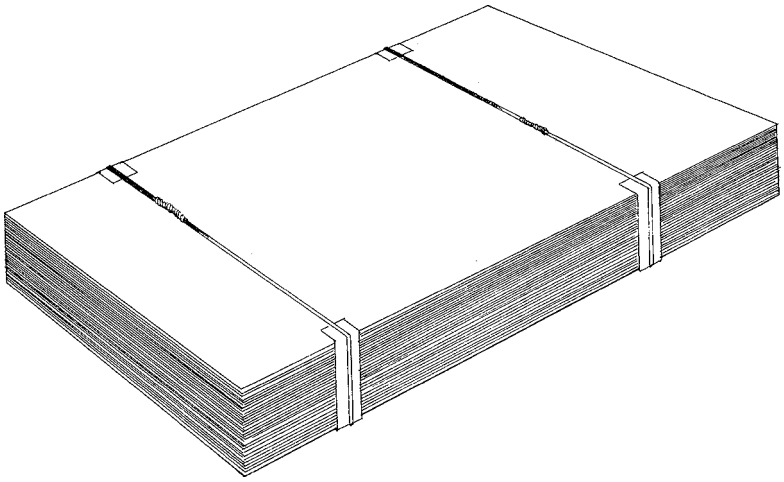

**FIG. 61 Suitable Method of Packaging Carbon Steel Sheets in Secured Lift, Bare**

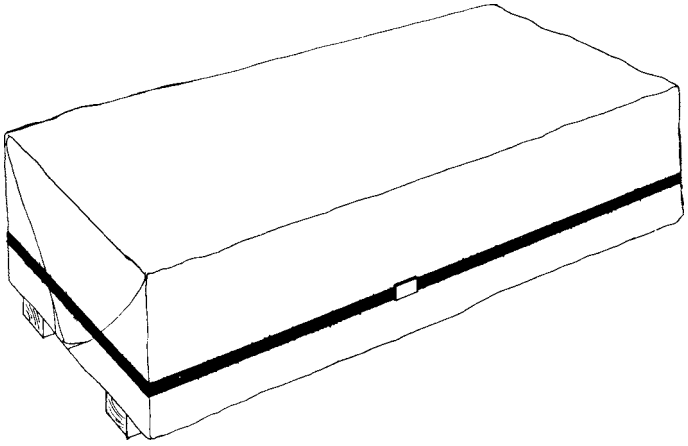

**FIG. 62 Suitable Shrouded Package of Cut-Length Sheets, Banded**

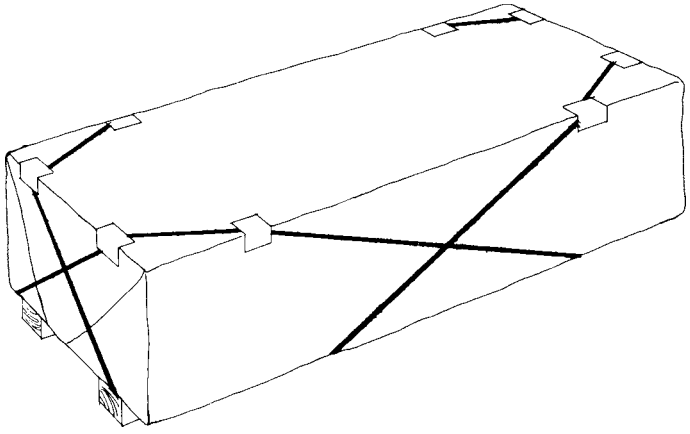

**FIG. 63 Suitable Shrouded Package of Cut-Length Sheets, Wired**

12.4.9.1 *Cut Lengths, Bare*—Fig. 89 and Fig. 90 illustrate suitable methods of packaging bare unwrapped stainless steel strip on crosswise skids or platforms. The recommended weight of this type package is 5000 lb (2268 kg) or more. Finishes and gages generally confined to this type of package are:

*(1)* No. 1 Finish, 0.0418 in. (1.062 mm) and thicker, on skids.

*(2)* No. 1 Finish, under 0.0418 in. (1.062 mm), on skeleton platforms.

When protection of surface is important, packaging bare, as illustrated by these methods, is not recommended. Suitable arrangement of skids and platforms is described in 12.5.

12.4.9.2 *Cut Lengths, Wrapped*—Fig. 59 and Fig. 91 illustrate suitably wrapped stainless steel strip on crosswise skids or platforms. Platforms may have either lengthwise or crosswise runners. The recommended weight of this type package is 5000 lb (2268 kg) or more. Finishes and gages generally confined to this type of package are:

*(1)* No. 1 Finish, 0.0418 in. (1.062 mm) and thicker, on skids.

*(2)* No. 1 Finish, under 0.0418 in. (1.062 mm), on skeleton platforms.

When protection of surface is important, packages wrapped, as illustrated by these methods, are not recommended. Suitable arrangement of skids and platforms is shown in 12.5.

12.4.9.3 *Cut Lengths, Fully Enclosed Package 5000 lb (2268 kg) and Heavier*—Fig. 92 illustrates a suitable method of



Copyright ASTM International
Reproduced by IHS under license with ASTM
No reproduction or networking permitted without license from IHS
Copyright by ASTM Int'l (all rights reserved);
Reproduction authorized per License Agreement with Kathe Hooper (ASTMIHS Account); Mon Oct 3 12:05:46 EDT 2005
Not for Resale

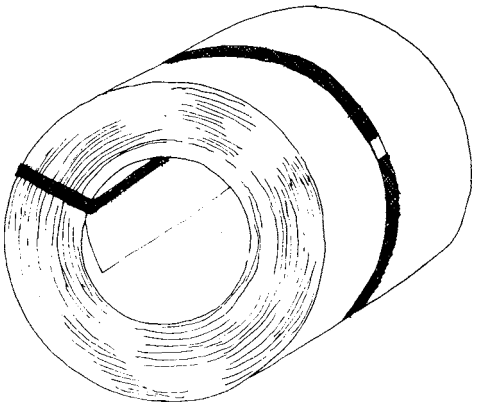

FIG. 64 Suitable Method of Packaging Individual Hot-Rolled Sheet or Strip Coil in the As-Rolled Condition

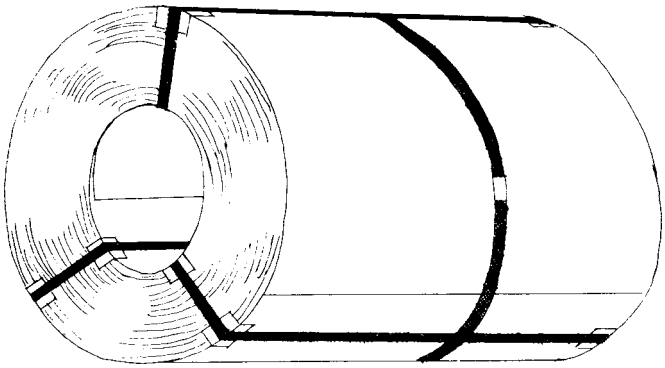

FIG. 65 Suitable Packaging of Highly Finished Individual Coil

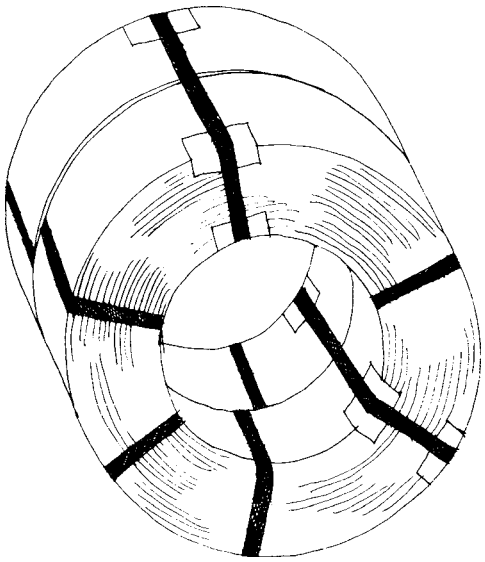

FIG. 66 Suitable Packaging of Two or More Narrow Sheet Coils into a Coil Group Package

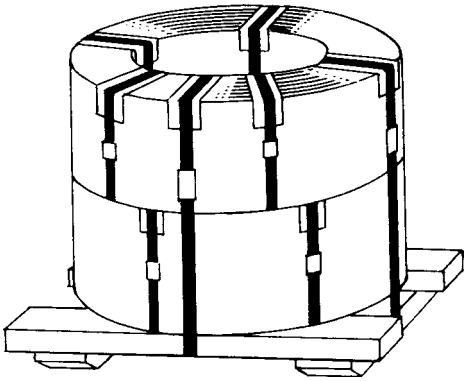

FIG. 67 Suitable Packaging of Bare Unwrapped Sheet Coils on Skeleton Platform with the Eye of the Coils Vertical

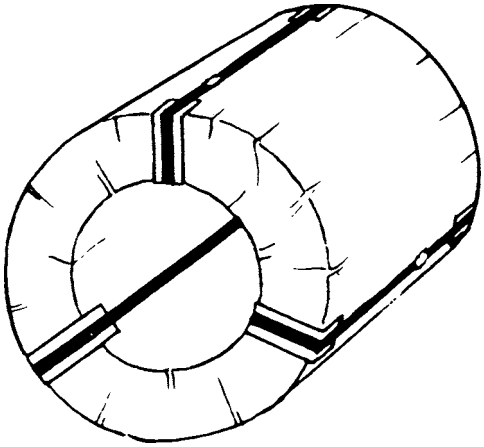

FIG. 68 Suitably Wrapped Individual Sheet Coil with Eye of the Coil Horizontal

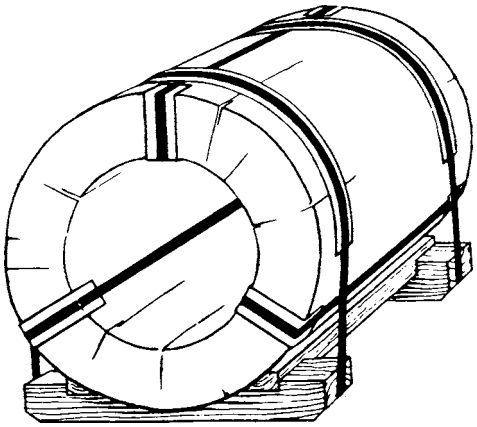

FIG. 69 Suitably Wrapped Individual Coil on Cradle Platform with the Eye of the Coil Horizontal

packaging stainless steel strip in a fully enclosed package on a platform using wood materials. Other materials generally used are hardboard, composition board, fiberboard, plywood, angles and channels, depending on the materials available, the type of package, and the discretion of the shipper. This package is designed for lifts 5000 lb (2268 kg) and over, and is recommended for maximum protection of all domestic shipments of all gages and finishes. Sideboards are not usually needed if material is less than 1 in. (25 mm) piling height.

12.4.9.4 *Cut Lengths Boxed*—Fig. 75 illustrates a suitable method of packaging stainless steel strip in a box of suitable solid protective material, lined or unlined, to provide an entirely closed flat container. This type container is designed



Copyright ASTM International
Reproduced by IHS under license with ASTM
No reproduction or networking permitted without license from IHS
Not for Resale
Reproduction authorized per License Agreement with Kathe Hooper (ASTMIHS Account); Mon Oct 3 12:05:46 EDT 2005

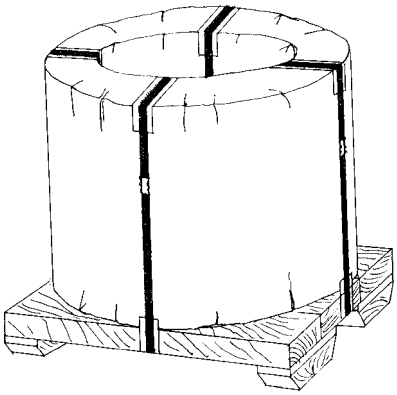

**FIG. 70 Suitably Wrapped Individual Coil on Platform with the Eye of the Coil Vertical**

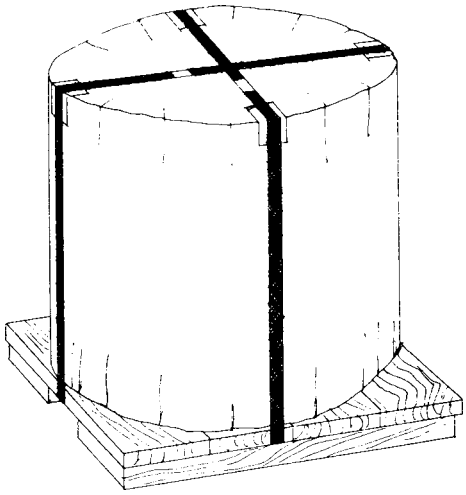

**FIG. 71 Suitably Wrapped or Covered Package of Sheet Circles on Skeleton Platform**

**TABLE 7 Number of Lengthwise Skids for Sheet Steel Packages[A]**

| Sheet Gage (in.) (mm) | Use 2 Skids, in. (mm) | Use 3 Skids, in. (mm) | Use 4 Skids, in. (mm) |
|---|---|---|---|
| 28 to 24 (0.0149 to 0.0239) (0.378 to 0.607) | 22 to 36 (559 to 914) wide | 36 to 56 (1422) wide | 56 to 75 (1905) wide |
| Under 24 to 20 (0.0239 to 0.0359) (0.607 to 0.912) | 22 to 42 (559 to 1067) wide | 42 to 68 (1727) wide | 68 to 96 (2438) wide |
| Under 20 to 16 (0.0359 to 0.0598) (0.912 to 1.519) | 22 to 50 (559 to 1270) wide | 50 to 84 (2134) wide | Over 84 wide |
| Under 16 to 12 (0.0598 to 0.1046) (1.519 to 2.657) | all widths | | |

[A] Lengthwise skids are not used on sheets over 192 in. (4877 mm) long or less than 22 in. (559 mm) wide.

for maximum protection of small quantities of all grades, gages, and finishes. Boxes are designed for packaging quantities of less than 5000 lb (2268 kg). Placing boxes on runners or platforms requires additional labor and material.

12.4.9.5 *Surface Protection*:

*(1) Protective Coverings*—The usual method of protecting surfaces is to interleave with nonabrasive antitarnish paper. Protection of surfaces by means of gluing or pasting paper, or otherwise applying protective coverings, requires additional labor and material. Protecting stainless steel strip with metal wrapping or using metal protector sheets on top or bottom, or both, of lift or package requires additional labor and material.

12.4.9.6 *Loading*—Due to the nature of stainless products, shipment in covered or closed equipment is recommended. If shipped in open-top equipment, shrouding of the package or load is recommended.

12.4.10 *Stainless Steel Strip, Coils*:

12.4.10.1 *Bare Unwrapped Individual Coils*—Fig. 64 illustrates a suitable method of packaging individual hot-rolled stainless steel strip coil in the as-rolled condition. This type of packaging is generally confined to hot-rolled or hot-rolled annealed material.

12.4.10.2 *Coils on Platform*—Fig. 93 illustrates a suitable method of packaging narrow stainless steel strip coils on skeleton platform with eye of the coils vertical. Placing individual coils or stacking coils on platforms requires additional labor and material. Separators between coils decreases the security of the package, and requires additional labor and material. This method of packaging is considered to be adequate for practically all domestic shipments of most gages and finishes. Material requiring maximum protection should be boxed.

12.4.10.3 *Coils, Fully Wrapped*—Fig. 87 illustrates a suitably wrapped individual stainless steel strip coil or group of coils. This method of packaging is not recommended for light-gage material nor for any material when protection of surface is important. Wrapping individual coils or wrapping, covering, or shrouding coil group packages requires additional labor and material.

12.4.10.4 *Coils in a Container*—Fig. 88 illustrates a suitable method of packaging narrow stainless steel strip coils in a container with the eye of the coils vertical. This type of package is an entirely enclosed container made of suitable solid material, and is recommended for maximum protection of all finishes and gages.

12.4.10.5 *Coils, Boxed on Platform with Eye of Coils Vertical*—Fig. 78 illustrates a suitable method of packaging individual stainless steel strip coils or group of strip coils in solid box on platform with the eye of the coils vertical.

12.4.10.6 *Surface Protection*:

*(1) Protective Coverings*—The usual method of protecting surfaces is to interleave with nonabrasive antitarnish paper. Protection of surfaces by means of gluing or pasting paper, or otherwise applying protective coverings, requires additional labor and material. Protecting stainless steel coils with metal wrapping requires additional labor and material.

12.4.10.7 *Loading*—Due to the nature of stainless products, shipment in covered or closed equipment is recommended. If shipped in open-top equipment, shrouding of the package or load is recommended.

12.5 *Skid Arrangements and Platforms*:

12.5.1 *Skid Arrangements*—All skids shall be made of sound lumber of commercial sizes not less than 3 in. (76 mm) in width nor more than 4 in. (102 mm) in height. The overall length of skids shall be approximately equal to the full dimension of the package along the direction in which they are



Copyright ASTM International
Reproduced by IHS under license with ASTM
No reproduction or networking permitted without license from IHS
Not for Resale
Reproduction authorized per License Agreement with Kathe Hooper (ASTMIHS Account); Mon Oct 3 12:05:46 EDT 2005

**TABLE 8 Number of Crosswise Skids for Sheet Steel Packages[A]**

| Sheet Gage (in.) (mm) | Use 2 Skids, in. (mm) | Use 3 Skids, in. (mm) | Use 4 Skids. in. (mm) | Use 5 Skids, in. (mm) | Use 6 Skids, in. (mm) |
|---|---|---|---|---|---|
| 24 and lighter (0.0239) (0.607) | 22 to 36 (559 to 914) long | 36 to 56 (1422) long | 56 to 76 (1930) long | 76 to 96 (2438) long | 96 to 120 (3048) long |
| Under 24 to 20 (0.0239 to 0.0359) (0.607 to 0.912) | 22 to 42 (559 to 1067) long | 42 to 68 (1727) long | 68 to 96 (2438) long | 96 to 122 (3099) long | 122 to 149 (3785) long |
| Under 20 to 16 (0.0359 to 0.0598) (0.912 to 1.519) | 22 to 50 (599 to 1270) long | 50 to 84 (2134) long | 84 to 120 (3048) long | 120 to 154 (3912) long | 154 to 188 (4775) long |
| Under 16 to 12 (0.0598 to 0.1046) (1.519 to 2.657) | 22 to 72 (559 to 1829) long | 72 to 120 (3048) long | 120 to 164 (4166) long | 164 to 208 (5283) long | 208 to 253 (6426) long |
| Heavier than 12 (0.1046) (2.657) | 22 to 82 (559 to 2083) long | 86 to 146 (3708) long | 146 to 206 (5232) long | 206 to 266 (6756) long | 266 to 327 (8306) long |

[A] The arrangements shown in Fig. 52 and Fig. 53 illustrate lengthwise and crosswise skid arrangements used for packaging cut length sheets.

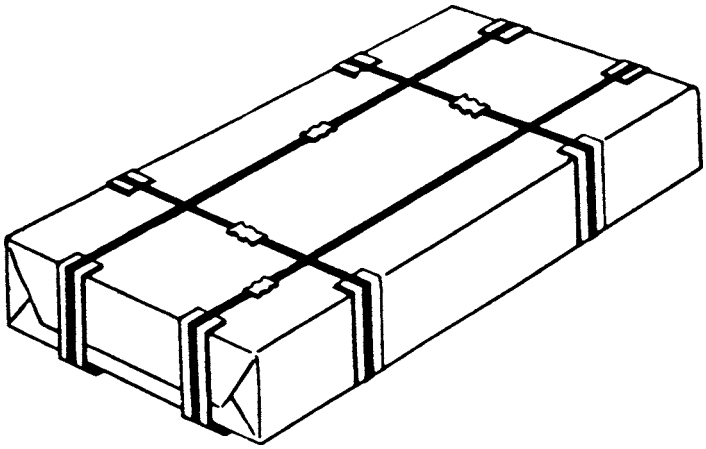

**FIG. 72 Suitably Wrapped Package on Lengthwise Skids**

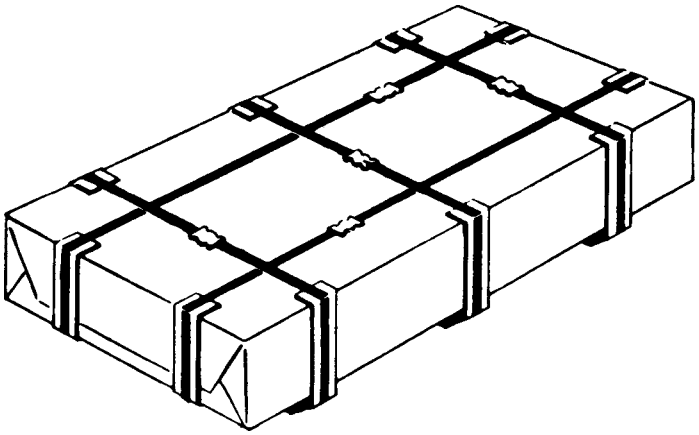

**FIG. 73 Suitably Wrapped Package on Crosswise Skids**

used. The number of skids required on packages using skids parallel to their lengthwise direction are shown in Table 7. The number of skids required on packages using skids parallel to their crosswise direction are shown in Table 8. Fig. 52 to Fig. 59 illustrate typical packaging of cut length sheets on skids.

12.5.2 *Platforms for Cut Lengths*—Structures consisting of deckboards and runners. The arrangements shown in Fig. 94 are often used for packaging of wide sheets of light gage or for packaging long, narrow sheets and strip of any gage piled side by side on one platform. Deckboards shall be equal in length to full width or length of the unit and shall have a minimum thickness of 1 in. (25 mm). Deckboards may be nailed to the runners. The minimum number of deckboards shall be the same as the number of lengthwise or crosswise skids shown in Table 7 and Table 8. Illustrations are general and actual construction may vary among producers.

## 13. Tin Mill Products

13.1 Tin mill products are among the most highly finished products of the steel industry; and marking, packaging, and loading methods are very important. The purchaser should give careful attention to these requirements when ordering and, if in question about a suitable method, should consult with the manufacturer.



Copyright ASTM International
Reproduced by IHS under license with ASTM
No reproduction or networking permitted without license from IHS
Not for Resale
Reproduction authorized per License Agreement with Kathe Hooper (ASTMIHS Account); Mon Oct 3 12:05:46 EDT 2005

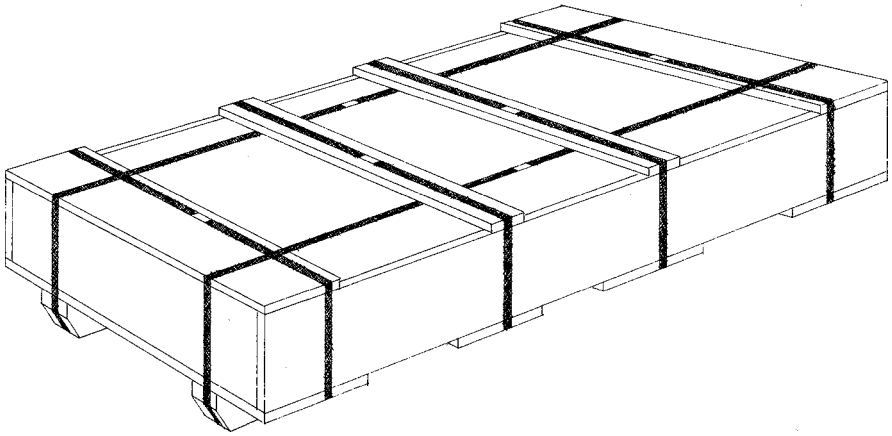

**FIG. 74 Steel Sheets in a Fully Enclosed Package on a Skeleton Platform, Using Wood Materials**

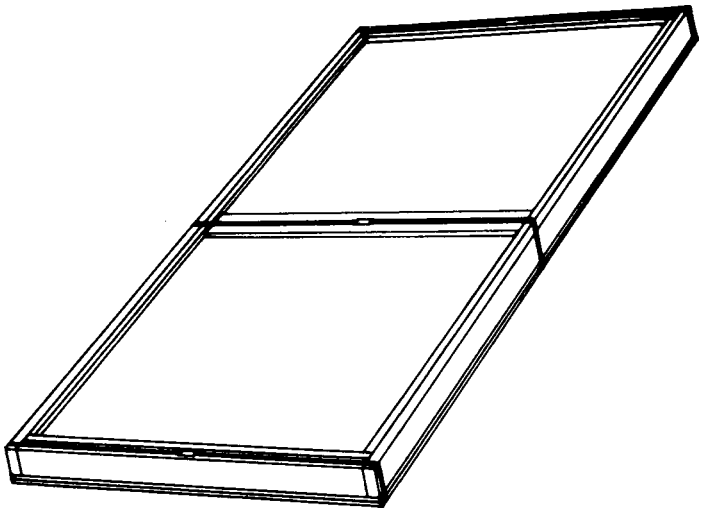

**FIG. 75 Steel Sheets in a Box of Suitable Solid Protective Material**

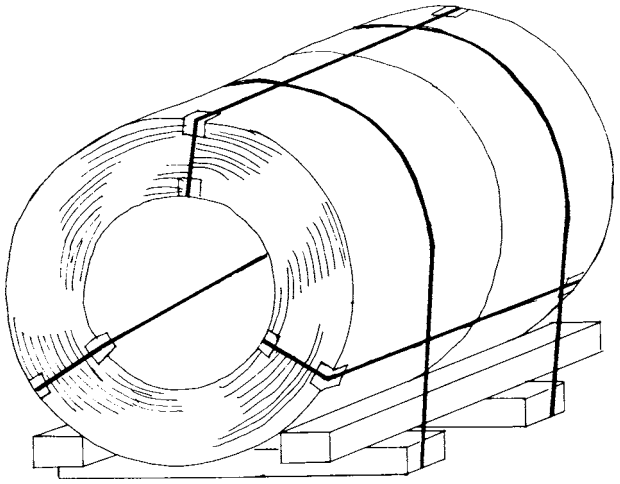

**FIG. 76 Suitably Packaged Bare Unwrapped Individual Stainless Steel Sheet Coil on Cradle Platform, with the Eye of the Coil Horizontal**

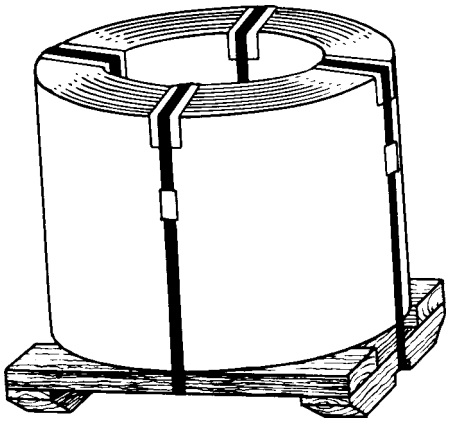

**FIG. 77 Suitably Packaged Bare Unwrapped Individual Sheet Coil on Platform with the Eye of the Coil Vertical**

13.2 *Product Grades*:

13.2.1 Tin plate.

13.2.2 Black plate.

13.2.3 Electrolytic chromium-coated steel (tin-free steel).

13.3 *Marking*:

13.3.1 *Cut Lengths*—Packages of cut length tin plate are identified with the following:

*(1)* Producer's name, brand, or trademark,

*(2)* Basis weight,

*(3)* Size,



Copyright ASTM International
Reproduced by IHS under license with ASTM
No reproduction or networking permitted without license from IHS
Copyright by ASTM Int'l (all rights reserved);
Reproduction authorized per License Agreement with Kathe Hooper (ASTMIHS Account); Mon Oct 3 12:05:46 EDT 2005
Not for Resale

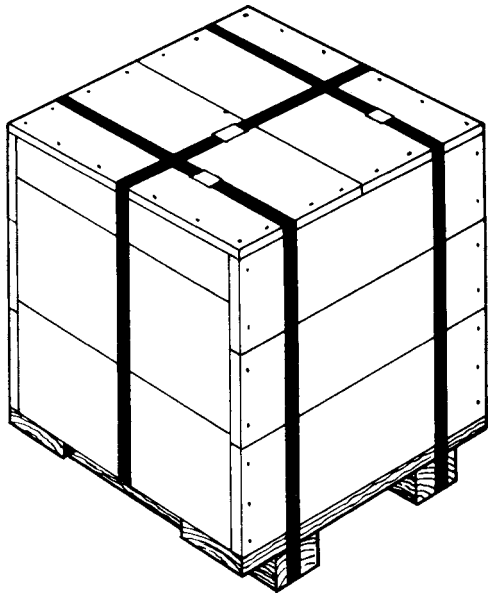

**FIG. 78 Suitably Packaged Individual Sheet or Strip Coil or Group of Sheet or Strip Coils in Solid Box, on Platform with the Eye of the Coil Vertical**

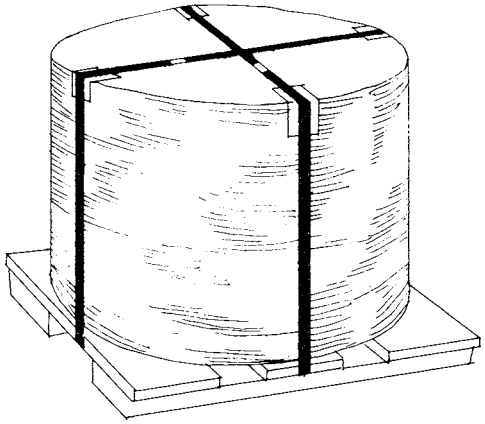

**FIG. 79 Suitably Packaged Single Pile of Bare Stainless Steel Sheet Circles on Skeleton Platform**

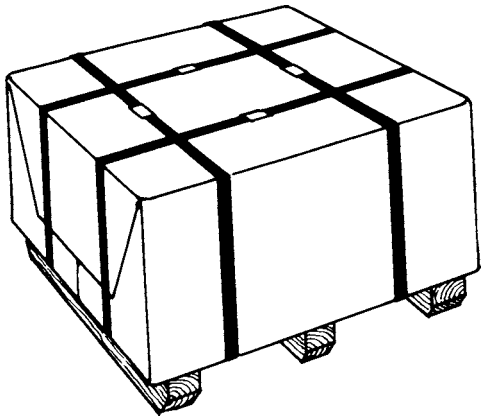

**FIG. 80 Multiple Piles of Circles on Solid Platform, Covered with Corrugated Fiberboard**

*(4)* Type,
*(5)* Temper,

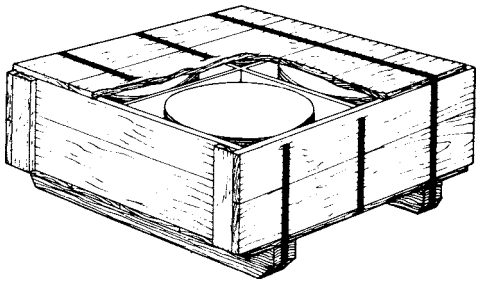

**FIG. 81 Multiple Piles of Circles in Box on Solid Deck Platform**

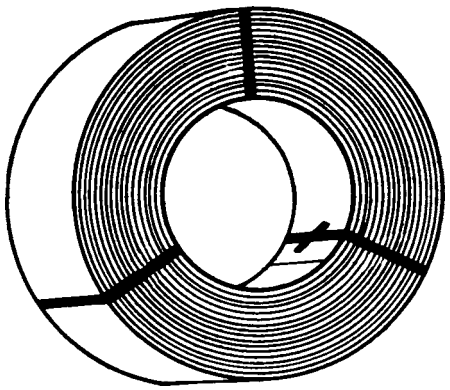

**FIG. 82 Narrow Strip Coil with Flat Twist Bands**

*(6)* Coating weight (when applicable),
*(7)* Product classification,
*(8)* Surface treatment (when applicable), and
*(9)* Differential markings (when applicable).

13.3.2 *Coils*—It is normal practice to identify each coil package with the following information:

*(1)* Producer's name, brand, or trademark,
*(2)* Width,
*(3)* Basis weight,
*(4)* Type,
*(5)* Temper,
*(6)* Coating weight (when applicable),
*(7)* Coil number,
*(8)* Lineal feet,
*(9)* Weight,
*(10)* Product classification,
*(11)* Differential markings (when applicable), and
*(12)* Surface treatment (when applicable).

13.4 *Packaging*:

13.4.1 *Cut Lengths*— Most tin mill products in cut lengths are shipped in multiple-package units secured to platforms. Such units consist of 10, 12, 15, or more packages, containing 112 sheets per package. The amount of protection and securement may vary with the method of transportation, the ultimate destination, and the experience of the shipper. The components of a typical package unit are as follows:

*(1)* Standard platform with two or three runners,
*(2)* Protection on top of platform when required,
*(3)* Paper lining when specified or required,
*(4)* Edge protectors under ties,
*(5)* Wire or flat band ties, and



Copyright ASTM International
Reproduced by IHS under license with ASTM by ASTM Int'l (all rights reserved);
No reproduction or networking permitted without license from IHS Not for Resale.
Reproduction authorized per License Agreement with Kathe Hooper (ASTMIHS Account); Mon Oct 3 12:05:46 EDT 2005

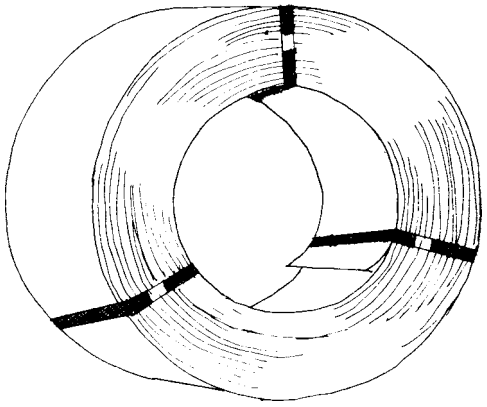

FIG. 83 Narrow Strip Coil with Machine Tension Bands

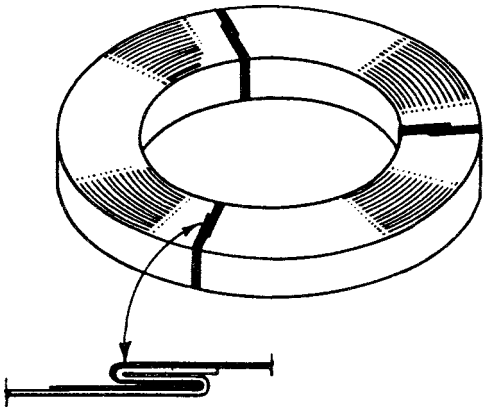

FIG. 84 Narrow Strip Coil with Knockdown or Buckle Bands

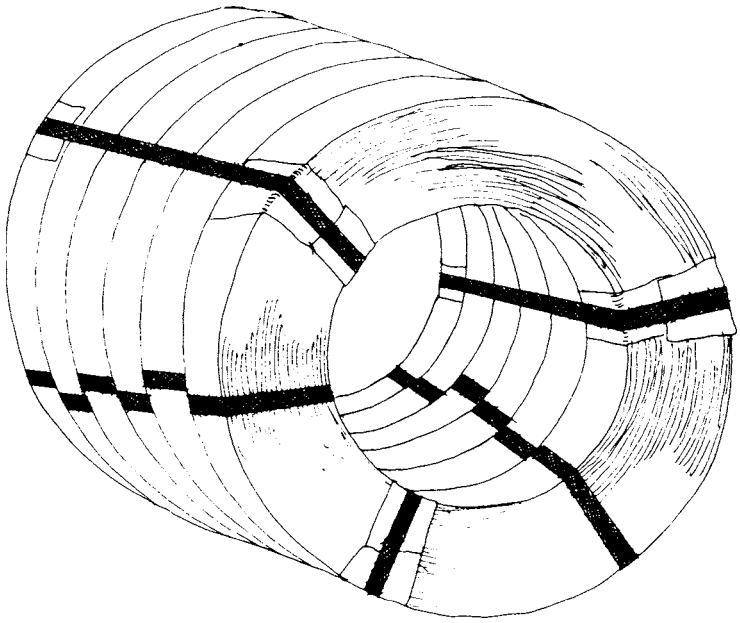

FIG. 85 Coil Group Package

*(6)* Fiberboard covering.

Regardless of which type of ties are shown in the illustrations, either flat bands or wires may be used. Fig. 95 illustrates a suitable method of packaging cut-length tin mill products in a multiple-package unit. This package has fiber-board covering. Edge protectors are used under ties. Ties may be bands or wire. Modifications may be made for units shipped to certain points. Standard platforms used for tin mill products are illustrated by Fig. 96 and Fig. 97. The illustrations show platforms with only two runners, but three runners are used when required. The



Copyright ASTM International
Reproduced by IHS under license with ASTM
No reproduction or networking permitted without license from IHS
Copyright by ASTM Int'l (all rights reserved);
Reproduction authorized per License Agreement with Kathe Hooper (ASTMIHS Account); Mon Oct 3 12:05:46 EDT 2005
Not for Resale

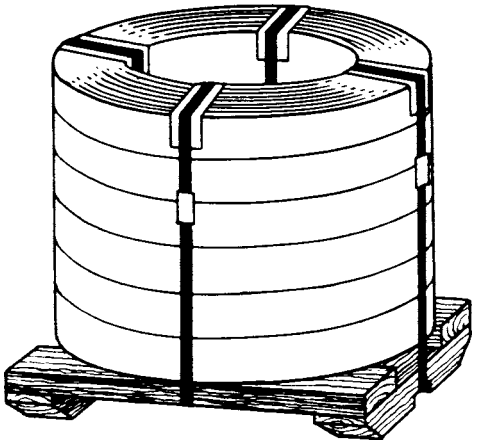

**FIG. 86 Narrow-Strip Coils on Skeleton Platform with the Eye of the Coils Vertical**

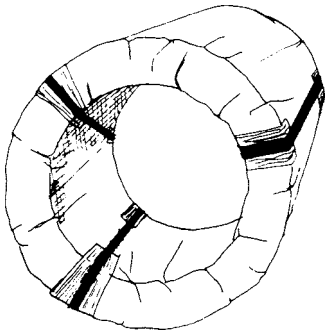

**FIG. 87 Suitably Wrapped Individual Strip Coils or Groups of Coils**

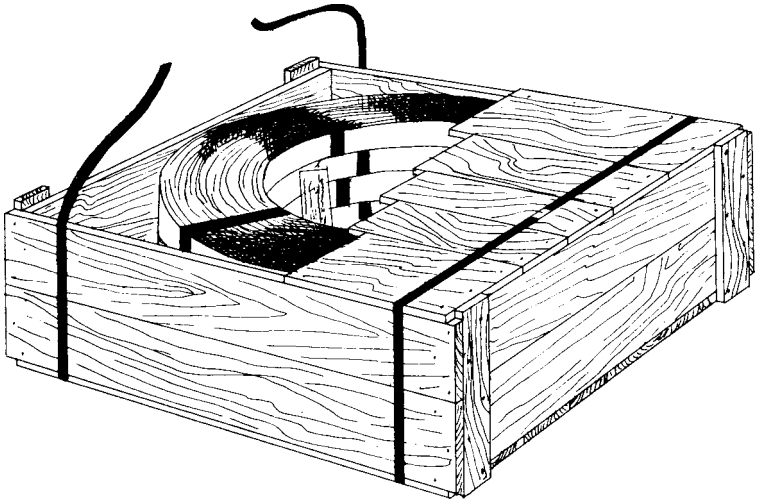

**FIG. 88 Suitably Packaged Bare Narrow Strip Coils in Container**

two-runner platform is regularly used for sheets up to 30 in. (762 mm) maximum length. The third runner, when used, is placed midway between the two outside runners. Decks are usually of single thickness, made from lumber dressed not lighter than ⅜ in. (9.5 mm) nor more than 13⁄16 in. (20.6 mm) in thickness, depending on the size and weight of the package. Deck sizes should be the same or slightly smaller than plate size, never larger. Runners are regularly made from lumber dressed to 1¾ in. (44.4 mm) in width and not less than 2 in. (50.8 mm) or more than 4 in. (101.6 mm) in height with the ends beveled. Unless otherwise specified, they are placed parallel to the short dimension of the sheet.

13.4.2 *Coils*—It is regular practice to package tin mill coils on platforms. It is not recommended that coils be shipped eye horizontal either with or without cradle platforms on those products where transit abrasion might be detrimental. Coil



Copyright ASTM International
Reproduced by IHS under license with ASTM by ASTM Int'l (all rights reserved);
No reproduction or networking permitted without license from IHS Not for Resale.
Reproduction authorized per License Agreement with Kathe Hooper (ASTMIHS Account); Mon Oct 3 12:05:46 EDT 2005

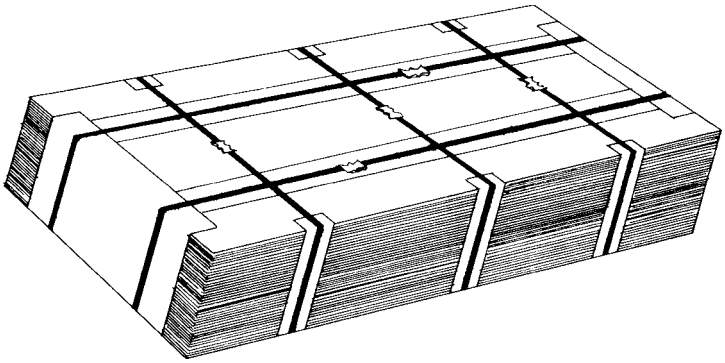

FIG. 89 Bare Package of Stainless Steel Strip on Crosswise Skids

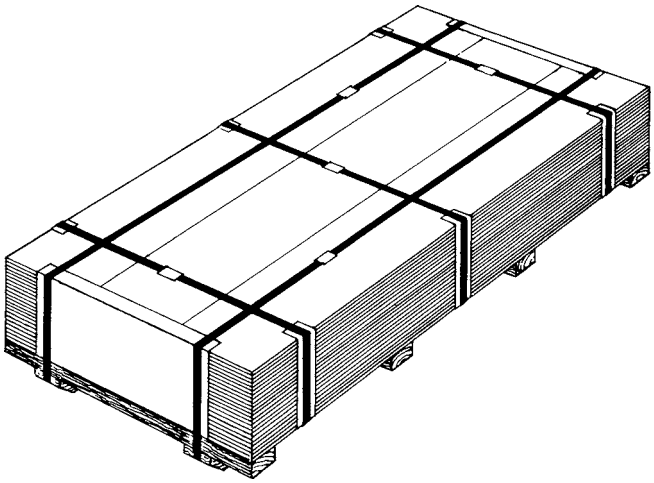

FIG. 90 Bare Package of Stainless Steel Strips on Skeleton Platform

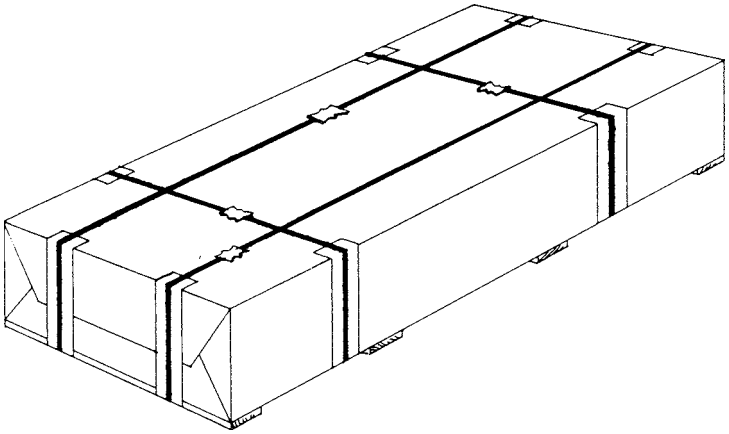

FIG. 91 Suitably Wrapped Stainless Steel Strip on Platform

packages are secured with tension-tied bands. The number of ties depends upon the size and weight of the coil, and the method of handling. Edge protectors are used under all ties. Platform runners not over 6 in. (152 mm) high have been found adequate in practically all instances. Supporting coils with special cores or spools is unnecessary and requires additional labor and material. It is regular practice to paper wrap coils. (See Fig. 69 and Fig. 98.) Fiberboard covers may be used for further protection when required. Protecting coils with metal wrapping requires additional labor and material.

13.5 *Loading*—Cut length tin mill products are shipped in closed cars or by truck. Coiled tin mill products are usually shipped in covered or closed cars or by truck.

## 14. Castings

14.1 All castings shall be separated by class, type, and condition when packed for shipment.

14.1.1 When castings are packed into containers they shall be adequately blocked, braced, or otherwise secured to prevent their movement within the containers.



Copyright ASTM International
Reproduced by IHS under license with ASTM
No reproduction or networking permitted without license from IHS
Copyright by ASTM Int'l (all rights reserved);
Reproduction authorized per License Agreement with Kathe Hooper (ASTMIHS Account); Mon Oct 3 12:05:46 EDT 2005
Not for Resale

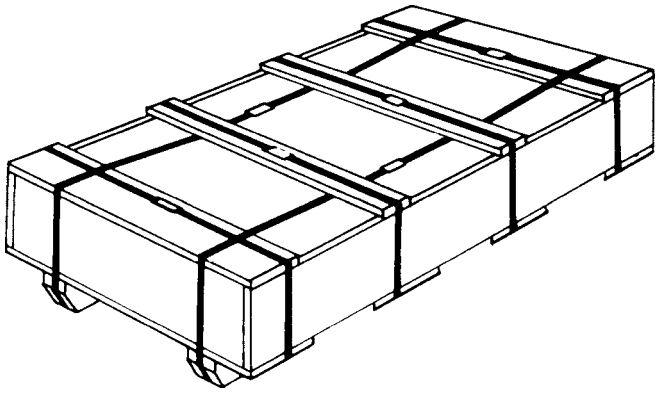

**FIG. 92 Suitably Packaged Stainless Steel Strip in a Fully Enclosed Package on a Platform Using Wood Materials**

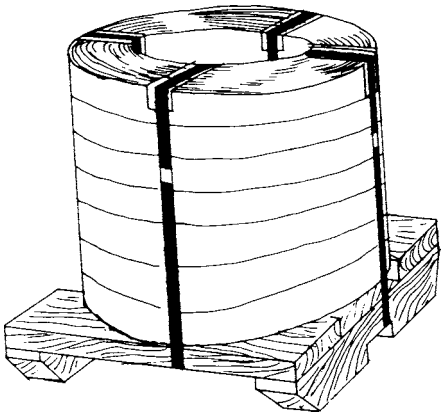

**FIG. 93 Suitably Packaged Narrow Stainless Steel Strip Coils on Skeleton Platform**

14.1.2 Finished or polished castings shall be adequately protected from mechanical damage. Where practical the castings shall be boxed. All polished or finished surfaces shall be protected with a suitable cover such as paper or plastic.

14.1.2.1 When boxing is not practical because of size or weight, the castings shall be secured on skids or pallets. Large polished or finished castings shall have the polished or finished surfaces protected with batten strips. The entire surfaces may be covered with a protective cover such as paper or plastic.

14.1.3 Rough castings unless otherwise specified may be shipped unpacked or bundled, unless by so doing the castings may be subject to damage.

14.1.3.1 Large castings weighing more than 250 lb (114 kg) may be secured on skids or pallets for convenience in handling.

*(1)* When shipped on skids or pallets they may be secured by ties of soft wire or tensioned flat bands. The number of ties is at the shipper's option but must be adequate to secure the load.

14.1.4 Castings having projections that may be damaged in handling or shipping may be boxed, crated, or secured on skids or pallets with the projections adequately protected with batten strips.

14.2 Containers when used shall afford maximum protection from the normal hazards of transportation and shall be so constructed as to ensure safe delivery by common carrier.

14.3 *Marking*—It is normal practice to have the heat number, alloy type, and pattern number cast or stamped on the surface of castings. The purchase order number may be shown on a tag attached to each box, skid, pallet or loose casting.

## 15. Keywords

15.1 loading; marking; packaging; shipment; steel products



Copyright ASTM International
Reproduced by IHS under license with ASTM
No reproduction or networking permitted without license from IHS
Copyright by ASTM Int'l (all rights reserved);
Reproduction authorized per License Agreement with Kathe Hooper (ASTMIHS Account); Mon Oct 3 12:05:46 EDT 2005
Not for Resale

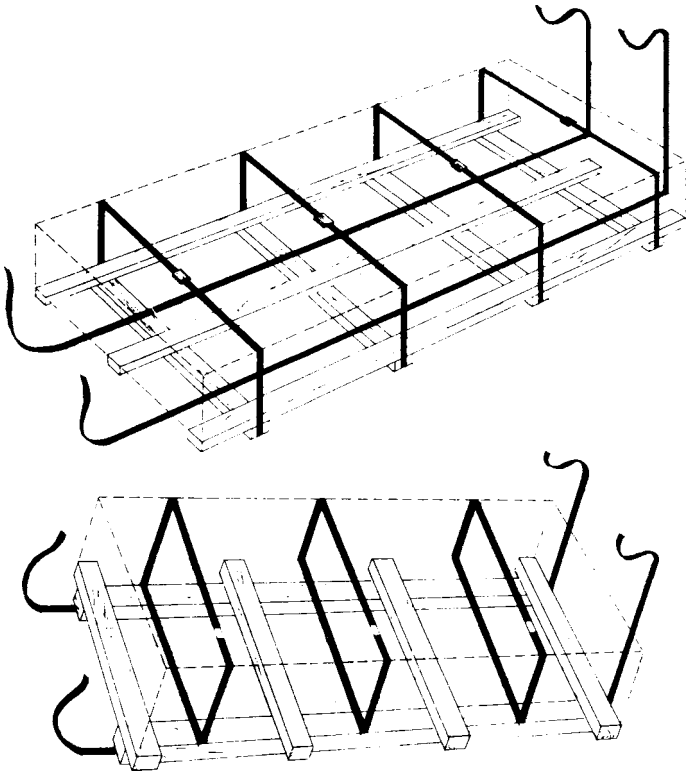

FIG. 94 Two Types of Skeleton Platform Systems

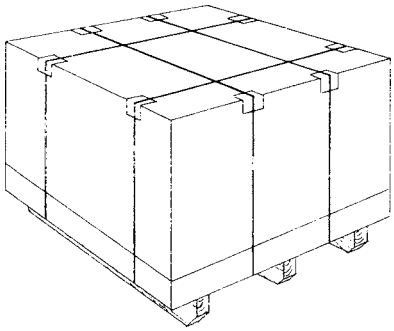

FIG. 95 Suitable Method of Packaging Cut-Length Tin Mill Products in Multiple Package Unit

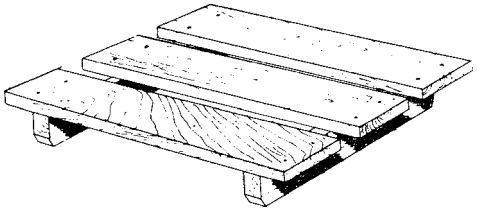

FIG. 96 Standard Skeleton Deck Two-Runner Platform



Copyright ASTM International
Reproduced by IHS under license with ASTM
No reproduction or networking permitted without license from IHS
Copyright by ASTM Int'l (all rights reserved);
Reproduction authorized per License Agreement with Kathe Hooper (ASTMIHS Account); Mon Oct 3 12:05:46 EDT 2005
Not for Resale

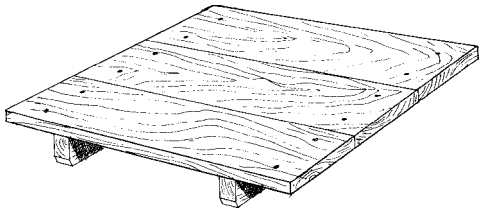

**FIG. 97 Standard Solid Deck Two-Runner Platform**

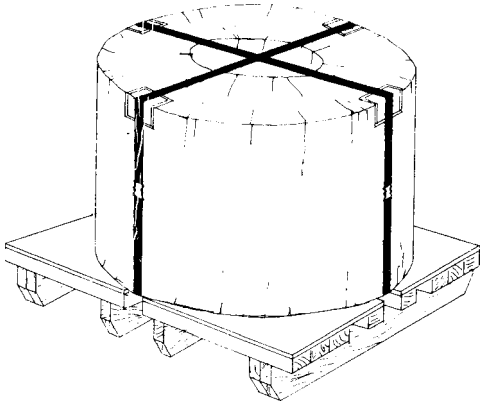

**FIG. 98 Paper Wrapped Tin Plate Coil on a Platform**

## SUMMARY OF CHANGES

Committee A01 has identified changes to this standard since the last version (A 700 – 99$^{\epsilon 1}$) that may impact its use.

*(1)* Changed the title.
*(2)* Revised 1.1
*(3)* Revised 4.2
*(4)* Revised 4.3 and the footnote.

*ASTM International takes no position respecting the validity of any patent rights asserted in connection with any item mentioned in this standard. Users of this standard are expressly advised that determination of the validity of any such patent rights, and the risk of infringement of such rights, are entirely their own responsibility.*

*This standard is subject to revision at any time by the responsible technical committee and must be reviewed every five years and if not revised, either reapproved or withdrawn. Your comments are invited either for revision of this standard or for additional standards and should be addressed to ASTM International Headquarters. Your comments will receive careful consideration at a meeting of the responsible technical committee, which you may attend. If you feel that your comments have not received a fair hearing you should make your views known to the ASTM Committee on Standards, at the address shown below.*

*This standard is copyrighted by ASTM International, 100 Barr Harbor Drive, PO Box C700, West Conshohocken, PA 19428-2959, United States. Individual reprints (single or multiple copies) of this standard may be obtained by contacting ASTM at the above address or at 610-832-9585 (phone), 610-832-9555 (fax), or service@astm.org (e-mail); or through the ASTM website (www.astm.org).*



Copyright ASTM International
Reproduced by IHS under license with ASTM
No reproduction or networking permitted without license from IHS
Copyright by ASTM Int'l (all rights reserved);
Reproduction authorized per License Agreement with Kathe Hooper (ASTMIHS Account); Mon Oct 3 12:05:46 EDT 2005
Not for Resale