Designation: A 698/A 698M – 07

Standard Test Method for Magnetic Shield Efficiency in Attenuating Alternating Magnetic Fields[1]

This standard is issued under the fixed designation A 698/A 698M; the number immediately following the designation indicates the year of original adoption or, in the case of revision, the year of last revision. A number in parentheses indicates the year of last reapproval. A superscript epsilon (ε) indicates an editorial change since the last revision or reapproval.

1. Scope

1.1 This test method covers the means for determining the performance quality of a magnetic shield when placed in a magnetic field of alternating polarity.

1.2 This test method provides a means of evaluating and grading magnetic shielding materials to determine their suitability for use in the production of magnetic shields.

1.3 This test method shall be used in conjunction with and shall conform to the requirements of Practice A 34/A 34M.

1.4 The values stated in either SI units or inch-pound units are to be regarded separately as standard. The values stated in each system may not be exact equivalents; therefore, each system shall be used independently of the other. Combining values from the two systems may result in non-conformance with the standard.

1.5 *This standard does not purport to address all of the safety concerns, if any, associated with its use. It is the responsibility of the user of this standard to establish appropriate safety and health practices and determine the applicability of regulatory limitations prior to use.*

2. Referenced Documents

2.1 *ASTM Standards:* [2]

A 34/A 34M Practice for Sampling and Procurement Testing of Magnetic Materials

A 340 Terminology of Symbols and Definitions Relating to Magnetic Testing

3. Terminology

3.1 The following symbols and abbreviated definitions apply only to this test method (the official symbols and definitions are listed in Terminology A 340):

3.2 *Definitions of Terms Specific to This Standard:*

3.2.1 *attenuation ratio*—the ratio of the measured voltage in the pickup coil before and after the insertion of the shield under test, E_1/E_2.

3.3 *Abbreviations:*

3.3.1 *A*—ac ammeter (usually root mean square (rms) but may be peak reading type).

3.3.2 E_1—voltage in the pickup coil, after establishing the field of test but before insertion of the shield into the test position.

3.3.3 E_2—highest voltage observed in the pickup coil, at the field of test, while rotating the test shield in the test position.

3.3.4 H_p—magnetic field strength, Oe [A/m].

3.3.5 I_p—ac magnetizing current, peak amperes.

3.3.6 *I*—ac magnetizing current, rms amperes.

3.3.7 l_c—length of demagnetizing air coil, cm [m].

3.3.8 *N*—number of turns per coil section (one half of total Helmholtz coil turns).

3.3.9 N_1—number of turns in demagnetizing coil.

3.3.10 *R*—mean radius of Helmholtz coil, cm [m].

3.3.11 *V*—electronic voltmeter (average volts $\times \pi/2\sqrt{2}$).

4. Summary of Test Method

4.1 *Frequency*—Tests under this test method are normally conducted at a test frequency of 60 Hz.

NOTE 1—Other test frequencies are used by mutual agreement. In general, as test frequencies are increased, it will be necessary to make corresponding changes in pickup or test coils and in the size of the power supply.

4.2 *Magnetic Field Strength*—Tests may be conducted at any desired magnetic field strength. The standard test level for ac magnetic fields is 0.5 or 2.0 peak Oe [40 or 160 peak A/m] and in the presence of the earth's magnetic field (see 9.2).

4.3 *Instrumentation*—The instruments described are for use at 60 Hz. At higher frequencies, electronic voltmeters and preamplifiers should also be satisfactory. It may be necessary to change the rms ammeter and power supplies for use at higher test frequencies. It may also be desirable to reduce the number of area turns in the pickup coil at these frequencies.

4.4 *Field Attenuation*—The usable range of attenuation ratios is determined by the strength of the starting field and the sensitivity of the available instrumentation. Measurements

[1] This test method is under the jurisdiction of ASTM Committee A06 on Magnetic Properties and is the direct responsibility of Subcommittee A06.01 on Test Methods.

Current edition approved May 1, 2007. Published June 2007. Originally approved in 1974. Last previous edition approved in 2002 as A 698/A 698M–02.

[2] For referenced ASTM standards, visit the ASTM website, www.astm.org, or contact ASTM Customer Service at service@astm.org. For *Annual Book of ASTM Standards* volume information, refer to the standard's Document Summary page on the ASTM website.

Copyright © ASTM International, 100 Barr Harbor Drive, PO Box C700, West Conshohocken, PA 19428-2959, United States.

Copyright ASTM International
Provided by IHS under license with ASTM
No reproduction or networking permitted without license from IHS
Not for Resale

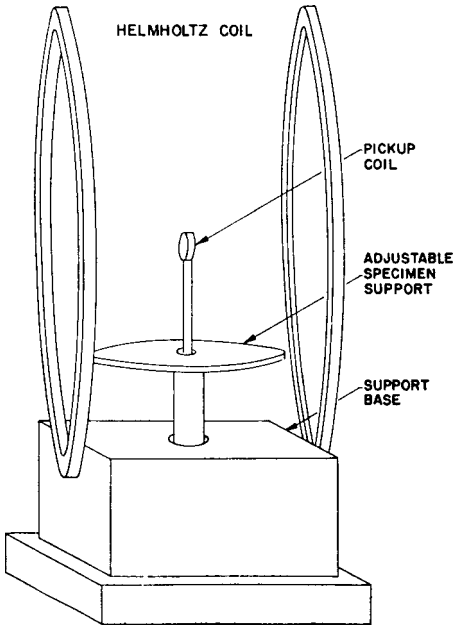

FIG. 1 Shield Testing Apparatus

shall not be made when signal voltages cannot be clearly distinguished from amplifier noise or other transient voltages.

5. Significance and Use

5.1 This test method provides an easy, accurate, and reproducible method for determination of shielding factors (attenuation ratios) in simple alternating magnetic fields.

5.2 Since the sensing or pickup coil is of finite size, the measured shielding factor tends to be the average value for the space enclosed by the coil. Due care is required when interpreting results when the coil is located near an opening in the shield.

5.3 This test method is suitable for design, specification acceptance, service evaluation, quality assurance, and research purposes on magnetic shields.

5.4 Provided geometrically identical shields are compared, this test method is also suitable for evaluation and grading of magnetic shielding materials.

6. Apparatus

6.1 *Helmholtz Coil*:

6.1.1 The standard Helmholtz coil shall have an inside diameter of 48 in. [1.22 m]. It shall consist of two identical coil sections of 48 turns each, wound on separate forms that are rigidly fastened together or as two separate 48-turn coils wound on a single cylindrical form. The frame shall be constructed of nonmagnetic materials. A satisfactory wire size is No. 14 varnish-insulated copper wire wound into concentrated multi-layer coils of approximately square cross section. **The two coils shall be mounted to have a common axis with the spacing between coil centers equal to the coil radius.** The electrical connections between coil sections shall be such that they are connected in series with their fields aiding to form the Helmholtz coil (Figs. 1 and 2).

6.1.2 The standard Helmholtz coil will measure shields up to 16 in. [0.40 m] in length and 12 in. [0.30 m] in diameter. If

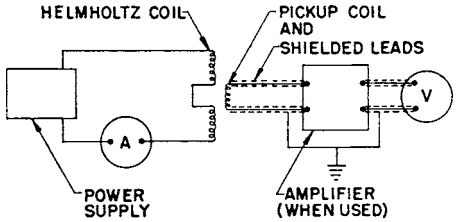

FIG. 2 Diagram of Connections for the Shield Test

larger shields are to be measured, the Helmholtz coil diameter shall be at least three times the length of the test specimen or four times its diameter, or both. By mutual agreement, small specimens may be measured in smaller Helmholtz coils providing the ratio of coil to specimen sizes described above is maintained. The framework shall be constructed to allow easy access for insertion of the shield test specimen. The pickup coil should be fastened to a support that maintains its position and orientation at the center of the Helmholtz coil system. The test fixture also requires an adjustable specimen support that permits perpendicular positioning in relation to the axis of the coil and permits 360° rotation. Also the test fixture shall be equipped with a centering adjustment which holds the shield specimen in place at the center of the Helmholtz coil system during the test. The axis of the test specimen shall be 90° to the direction of the field. No magnetic material shall be used in the construction of the test apparatus, and the use of electrically conducting materials should also be avoided wherever possible.

6.2 *Pickup Coil*—The pickup coil shall be wound to have a value of area turns that is adequate to provide sufficient voltage for good instrument scale deflections when the coil is in the weakest field to be measured. In general, for broad-range requirements, the pickup coil should have an area turns product of approximately 50 000-cm^2 turns. For best reproducibility, the coil should be covered with a thin nonmagnetic electrically conductive foil shield (copper, aluminum, and so forth) which should be connected to the system common point or to ground. Care must be taken to make sure the edges of this shield material are insulated in such a manner as to prevent a shorted turn effect around the flux linking the coil area. Coil leads to the instrument shall be enclosed in a grounded electrostatic shield which may also be connected to the foil of the coil shield. The pickup coil should be positioned at the center of the Helmholtz coil, equidistant from the two coil sections, and oriented so its axis coincides with that of the Helmholtz coil. Either or both the diameter and length of the pickup coil shall be equal to or less than one half of the diameter of the shield test specimen and should be less than one tenth of the Helmholtz coil radius. The pickup coils listed in Table 1 are recommended for use with various size shields.

6.3 *Ammeter*—A true rms ammeter, having rated full-scale accuracy of at least 1 %, may be used to set the magnetizing current in the Helmholtz coil. The peak value of magnetizing current is calculated from the measured value of rms amperes. When desired, the ammeter may be one which reads directly in peak amperes.

6.4 *Electronic Voltmeter*—A wide voltage range, average responding type, calibrated $\pi/2\sqrt{2}$ × average (sometimes

Copyright ASTM International
Provided by IHS under license with ASTM
No reproduction or networking permitted without license from IHS
Not for Resale

TABLE 1 Suggested Pickup Coils

Pickup Coil Number	Wire Size No.	Number of Turns	Approximate Dimensions	
			Length, in. [mm]	Mean Diameter, in. [mm]
1	40	10 000	1.0 [25.4]	1.0 [25.4]
2	40	20 000	1.25 [31.8]	1.25 [31.8]

called rms calibrated), electronic voltmeter having a rated full-scale accuracy of at least 1 % shall be used to measure induced voltage in the pickup coil. This meter shall have a minimum impedance of 1 MΩ to avoid excessive loading effects on the pickup coil. It shall be accurately calibrated at the frequency of test.

6.5 *Preamplifier*—When specimens having high attenuation are tested or when pickup coils with relatively small values of area turns are used, the electronic voltmeter may be unable to resolve the low value of pickup voltage obtained from inside the shield. In such cases, a linear high-impedance preamplifier having an extremely low noise level voltage in its output is placed between the pickup coil and the electronic voltmeter to extend its low voltage range. This preamplifier should have an input impedance of at least 1 MΩ at the test frequency. The preamplifier should be connected into the circuit for voltage measurement, both with and without the shield in test position. A calibrated attenuator may be used if necessary.

6.6 *Power Supply*—Commercial 60-Hz power sources are satisfactory providing they have good regulation and maintain an accurate sinusoidal voltage. Current waveform distortion is acceptable in forms or amounts that do not cause the measured peak value of current to deviate by more than 5 % from the peak value obtained by calculation from the measured rms exciting current and by using sinusoidal waveform constants. For satisfactory tests, the current waveform distortion must remain constant for the duration of each test. Twisted pair-type leads should be used for all connections within the power supply and between the power supply and the Helmholtz coils.

6.7 *Power Control Equipment*—Variable-ratio autotransformers, induction regulators, oscillators, power amplifiers, or other devices are suitable for adjusting voltages needed to provide the desired Helmholtz coil currents. The use of rheostat-type controls is not recommended. All power supply parts must be located as far as practicable from the Helmholtz coils and must be energized during all tests.

6.8 *Hall Probes*—In certain instances such as when low attenuation ratios are present or when very small shields are to be tested, transverse Hall probes may be used instead of pickup coils. The active sensing element dimensions must conform to the same size restrictions as pickup coils (see 6.2).

7. Test Specimens

7.1 Magnetic shields of any shape may be evaluated for attenuation under this test method providing their geometric shape is one that can partially surround the pickup coil. Any size shield may be tested when the requirements specified in 7.2 and 7.3 are met.

7.2 The shield shall be large enough to fit around a pickup coil of sufficient area turns and must maintain the coil to shield size relationship specified in 6.2.

7.3 Large magnetic shields of any size may be tested providing the ratio of Helmholtz coil to magnetic shield size is maintained in accordance with the requirements of 6.2.

8. Standard Test Values

8.1 The standard test conditions shall be an alternating field, at a frequency of 60 Hz and at a magnetic field strength, H_p, of 0.5 or 2.0 Oe [39.8 or 159 A/m], which is calculated from a measured peak value of current or from the assumed peak value of the measured rms current using the relationship $I_p = I\sqrt{2}$. By mutual agreement, tests may be conducted at other frequencies and field strengths.

9. Procedures

9.1 Orient the test set to the direction that gives the lowest possible spurious voltage in the test pickup coil as a result of stray magnetic fields (Note 2). Measure this residual voltage on the electronic voltmeter with and without the test specimen in place and before power is applied to the Helmholtz coils. A satisfactory test location is one in which the stray pickup voltage is very small relative to either of the test voltages. (The recommended ratio of test to stray voltage is 100:1.) Take care to avoid coupling stray pickup directly into the electronic voltmeter amplifier through its metal case. It should be isolated from equipment such as oscilloscopes or other test instruments. They should be remotely located and turned off during measurement where interference occurs.

NOTE 2—Some high-permeability magnetic shields are very susceptible to physical damage and must be handled very carefully to avoid degradation of magnetic properties.

9.2 Demagnetize the shield before test (see 9.3). After demagnetization, begin the test at the lowest value of magnetic field strength (Note 3). With the shield specimen remotely located, apply excitation to the Helmholtz coil and increase it until the desired value of magnetizing current has been reached. Then read the electronic voltmeter and record the voltage as E_1 for that value of magnetic field strength. Reduce the excitation to zero field, then insert the shield test specimen over the pickup coil and center it in the Helmholtz coil. Slowly restore and readjust the current to the same magnetic field strength, then obtain the attenuated value of pickup voltage E_2 by slowly rotating the test shield around its axis (pickup coil and Helmholtz coil remaining stationary). Record the highest value of voltage pickup as E_2. Nonsymmetrical or partial shield enclosures should be oriented in the direction of use. Remove the shield from the Helmholtz coil. The next higher value of magnetic field strength is now established and the testing procedure shall be repeated.

NOTE 3—During the test, care must be taken to ensure that the shield is the only magnetic material present. Trouble may result from metal stools, benches, desks, carts, spare test specimens, tools, laboratory instruments, file cabinets, or other metal devices that are near the test coils.

9.3 *Demagnetization*—Because previous magnetic history may leave a residual magnetic field in the shield, demagnetization may be necessary to achieve reproducible results. Two acceptable demagnetization methods are described in 9.3.1 and 9.3.2.

Copyright ASTM International
Provided by IHS under license with ASTM
No reproduction or networking permitted without license from IHS
Not for Resale

TABLE 2 Demagnetizing Field for Air Solenoid

Material	Magnetic Field Strength, H_p, in Center of Demagnetizing Coil, Oe [A/m]
Nickel-iron and amorphous alloys	10 [800]
Silicon iron and low-carbon steel alloys	50 [4000]

TABLE 3 Demagnetizing with Applied Windings

Material	Approximate Field A-turns/cm [A-turns/m]
Nickel-iron and amorphous alloys	2 [0.02]
Silicon iron and low-carbon steel alloys	10 [0.10]

9.3.1 *Demagnetization Method 1*—The shield may be demagnetized by slowly withdrawing it from the center of an air coil (along the coil axis) and removing it directly to a location remote from the coil (Note 4). The diameter of the air coil should be a minimum of two times the diameter (or diagonal, as of a square shield) of the shield. The length-to-diameter ratio of the air coil should be a minimum of three to one. The field, H_p, in the center of the demagnetizing air coil should be established with commercial power frequency currents to the values shown in Table 2 using the following relationships:

$$H_p = 0.4\pi N_1 I_p / l_c \text{ (cgs−emu)}$$

$$H = N_1 I_p / l_c \text{ [SI]}$$

NOTE 4—If the demagnetizing coil is located in the same room as the Helmholtz coil equipment, or in such a place that the field set up by it will interfere with other testing, it should be turned on only while being used to demagnetize the test specimens.

9.3.2 *Demagnetization Method 2*—The shield may be demagnetized by threading turns (when the structure permits) through the open ends of the shield and establishing a high flux level in the material of the shield with commercial power frequency currents in these turns. The current must be slowly and smoothly reduced from the maximum value, in very small increments, to a vanishingly small applied magnetic field. The magnetizing field for magnetic path lengths given in Table 3 are needed to establish the required maximum induction. The magnetic path length shall be taken as the maximum circumferential dimension of the shield.

10. Calculation

10.1 The magnetic fields established during the test and the resultant magnetic field attenuations shall be calculated in accordance with 10.2, 10.3, and 10.4. The symbols and abbreviated definitions used in the equations or descriptions are defined in 3.1.

10.2 *Magnetic Field Strength*—The magnetic field in the central test area of the Helmholtz coil shall be calculated as follows:

$$H_p = 0.8992\, NI_p/R \text{ (cgs−emu)}$$

$$H = 0.7156\, NI_p/R \text{ [SI]}$$

The turns and dimensions of the standard Helmholtz coil can be chosen to have values that reduce the above formula to the simpler and more convenient relations shown below:

10.2.1 When the current in the standard Helmholtz coil windings is read on a true rms-indicating ammeter, the relation becomes:

$$H_p = 1.00\, I \text{ (cgs−emu)}$$

$$H_p = 79.6\, I \text{ [SI]}$$

10.2.2 If a peak-reading ammeter is used with the standard Helmholtz coil the relation is as follows:

$$H_p = 0.708\, I_p \text{ (cgs−emu)}$$

$$H = 56.3\, I_p \text{ [SI]}$$

10.3 *Attenuation Ratio*—The test values shall be recorded as E_1 and E_2 voltage readings (see 9.2) and the attenuation ratio calculated as follows:

$$\text{Attenuation ratio} = (E_1/E_2)$$

10.4 *Attenutation (Decibels)*—When desired, the attenuation may be specified or measured in decibels. If recorded in decibels, the attenuation is the difference between the decibel readings corresponding to the voltages E_1 and E_2. If recorded as voltages, the decibels (dB) may be calculated from the following relation:

$$\text{Attenuation} = 20 \log (E_1/E_2)$$

10.5 If a Hall probe is used, the magnetic field strength can be directly determined. The attenuation ratio is given by:

$$\text{Attenuation Ratio} = H_1/H_2$$

where H_1 is the magnetizing field strength without the shield in place and H_2 is the magnetizing field strength with the shield placed in the Helmholtz coil.

11. Precision and Bias

11.1 The reproducibility of test values can be drastically affected by physical damage to the shield specimen. When test shields are properly handled and the equipment is designed to keep the meter indications well upscale, the precision of test for attenuation ratio is ±5 % of the voltage ratio or ±0.4 dB. When the meter indications are allowed to fall downscale and sinusoidal current waveform in the Helmholtz coil cannot be maintained, the test errors will become progressively larger.

12. Keywords

12.1 attenuation ratio; Helmholtz coil; magnetic shield; pick-up coil; shielding factor

Copyright ASTM International
Provided by IHS under license with ASTM
No reproduction or networking permitted without license from IHS
Not for Resale

ASTM International takes no position respecting the validity of any patent rights asserted in connection with any item mentioned in this standard. Users of this standard are expressly advised that determination of the validity of any such patent rights, and the risk of infringement of such rights, are entirely their own responsibility.

This standard is subject to revision at any time by the responsible technical committee and must be reviewed every five years and if not revised, either reapproved or withdrawn. Your comments are invited either for revision of this standard or for additional standards and should be addressed to ASTM International Headquarters. Your comments will receive careful consideration at a meeting of the responsible technical committee, which you may attend. If you feel that your comments have not received a fair hearing you should make your views known to the ASTM Committee on Standards, at the address shown below.

This standard is copyrighted by ASTM International, 100 Barr Harbor Drive, PO Box C700, West Conshohocken, PA 19428-2959, United States. Individual reprints (single or multiple copies) of this standard may be obtained by contacting ASTM at the above address or at 610-832-9585 (phone), 610-832-9555 (fax), or service@astm.org (e-mail); or through the ASTM website (www.astm.org).

Copyright ASTM International
Provided by IHS under license with ASTM
No reproduction or networking permitted without license from IHS
Not for Resale