Designation: A 697/A 697M – 03

Standard Test Method for Alternating Current Magnetic Properties of Laminated Core Specimen Using Voltmeter-Ammeter-Wattmeter Methods[1]

This standard is issued under the fixed designation A 697/A 697M; the number immediately following the designation indicates the year of original adoption or, in the case of revision, the year of last revision. A number in parentheses indicates the year of last reapproval. A superscript epsilon (ε) indicates an editorial change since the last revision or reapproval.

1. Scope

1.1 This test method covers the determination of several ac magnetic properties of laminated cores made from flat-rolled magnetic materials.

1.2 This test method covers test equipment and procedures for the determination of impedance permeability and exciting power from voltage and current measurements, and core loss from wattmeter measurements. These tests are made under conditions of sinusoidal flux.

1.3 This test method covers tests for two general categories (1 and 2) of cores based on size and application.

1.4 Tests are provided for power and control size cores (Category 1) operating at inductions of 10 to 15 kG [1.0 to 1.5 T] and at frequencies of 50, 60, and 400 Hz.

1.5 Procedures and tests are provided for coupling and matching type transformer cores (Category 2) over the range of inductions from 100 G [0.01 T] or lower to 10 kG [1.0 T] and above at 50 to 60 Hz or above when covered by suitable procurement specifications.

1.6 This test method also covers tests for core loss and ac impedance permeability under incremental test conditions (ac magnetization superimposed on dc magnetization) for the above core types and at inductions up to those that cause the ac exciting current to become excessively distorted or reach values that exceed the limits of the individual test equipment components.

1.7 This test method shall be used in conjunction with Practice A 34/A 34M and Terminology A 340. It depends upon these designated documents and a related reference test manual for detailed information which will not be repeated in this test method.

1.8 The values and equations stated in customary (cgs-emu and inch-pound) or SI units are to be regarded separately as standard. Within this standard, SI units are shown in brackets. The values stated in each system may not be exact equivalents; therefore, each system shall be used independently of the other. Combining values from the two systems may result in nonconformance with this standard.

1.9 *This standard does not purport to address all of the safety concerns, if any, associated with its use. It is the responsibility of the user of this standard to establish appropriate safety and health practices and determine the applicability of regulatory limitations prior to use.*

2. Referenced Documents

2.1 *ASTM Standards:* [2]

A 34/A 34M Practice for Sampling and Procurement Testing of Magnetic Materials

A 340 Terminology of Symbols and Definitions Relating to Magnetic Testing

3. Terminology

3.1 The terms and symbols listed below apply only to this test method. The official list of symbols and definitions may be found in Terminology A 340.

3.2 *Symbols:*

A_s = *E* lamination surface area, one side only,
A_{ss} = *EI* lamination surface area, one side only,
h = lamination stack height,
A_{dc} = dc ammeter,
I_{dc} = dc current,
N_1 = primary turns,
N_2 = secondary turns,
N_3 = tertiary turns,
R_1 = ammeter shunt resistance,
V_f = flux voltmeter,
w = lamination center leg width,
W = wattmeter, and
Z = choke coil impedance.

4. Summary of Test Method

4.1 For Category 1 cores, the recommended tests are made at a frequency of 60 Hz and at a test induction within the range from 10 through 15 kG [1.0 to 1.5 T].

4.2 For Category 2 cores, the recommended tests are made at a frequency of 50 or 60 Hz and at inductions of 40, 100 or 200, 2000, 5000, 6000, 7000, and 10 000 G [0.004, 0.01 or 0.02, 0.2, 0.5, 0.6, 0.7, and 1.0 T]. Any or all may be required depending on the type of core material.

[1] This test method is under the jurisdiction of Committee A06 on Magnetic Properties and is the direct responsibility of Subcommittee A06.01 on Test Methods.

Current edition approved Oct. 1, 2003. Published November 2003. Originally approved in 1974. Last previous edition approved in 1998 as A 697 – 98.

[2] For referenced ASTM standards, visit the ASTM website, www.astm.org, or contact ASTM Customer Service at service@astm.org. For Annual Book of ASTM Standards volume information, refer to the standard's Document Summary page on the ASTM website.

Copyright © ASTM International, 100 Barr Harbor Drive, PO Box C700, West Conshohocken, PA 19428-2959, United States.

Copyright ASTM International
Provided by IHS under license with ASTM
No reproduction or networking permitted without license from IHS
Not for Resale

5. Significance and Use

5.1 This test method was developed for evaluating the ac magnetic properties of laminated cores made from flat-rolled magnetic materials.

5.2 The reproducibility and repeatability of this test method are such that this test method is suitable for design, specification acceptance, service evaluation, and research and development.

6. Apparatus

6.1 The apparatus for testing under this test method shall consist of as many of the following components, described in 6.2 through 6.12, as required to perform the desired test measurements.

6.2 *Test Coils*—In general, test coils are designed to surround a square center leg stack (lamination stack height equal to center leg width). They consist of two or more windings with the secondary wound on the coil form first. Three groups of standard test coils are described in 6.2.1 through 6.2.3. Each of these has been designed to provide specific features during test. Because of turns, coil resistance, and magnitude of induced voltage, each has a particular field of application.

6.2.1 The coils listed in Table 1, for testing Category 1 cores, have been designed to have equal primary and secondary turns and provide an induced voltage of 115 V when operating at a peak flux density of 15 kG [1.5 T] at 60 Hz.

6.2.2 The coils listed in Table 2, for testing Category 2 cores, have been designed to have characteristics that provide a direct readout capability for incremental permeability. The test coil is designed so that the primary winding $- - >$ $N_1 = 100\sqrt{2}\ \pi\ l_1$, the secondary winding $N_2 = 20\ l_1$, and the tertiary winding N_3 is designed so that the $N_3 = 5\sqrt{2}\ \pi\ l_1$(and $N_1/N_3 = 20$).

6.2.3 The coils listed in Table 3 have been designed for testing Category 1 cores at a frequency of 400 Hz.

6.3 *Flux Voltmeter*—The flux voltmeter shall be a true average responsive voltmeter calibrated to read $\sqrt{2}\ \pi/4$ times the full wave rectified average voltage so that its indications will be identical to those of a true rms voltmeter on a pure sinusoidal voltage. To produce the estimated precision of tests under this test method, the full-scale errors shall not exceed 0.5 % (0.25 % or better preferred). Either digital or analog flux voltmeters are permitted. The normally high impedance of digital flux voltmeters is desirable to minimize loading effects. The internal resistance of an analog flux voltmeter shall not be less than 1000 Ω/V of full-scale indication.

6.4 A variable voltage divider on the input of the flux voltmeter may be used to scale the voltmeter reading. The voltage divider should provide for ratio adjustments to four significant figures to establish the desired fraction of the secondary voltage that is to be impressed on the flux voltmeter. Care must be taken to assure that the voltage rating of a ratio transformer is adequate for use at the test frequency and voltage. A resistive voltage divider may be used with high impedance electronic voltmeters. Dividers having a total resistance of at least 10 KΩ for low-voltage tests and 100 KΩ or more for other tests are preferred. When a resistive voltage divider is used, additional correction for instrument burden may be required to eliminate the effect of the resistive losses in the voltage divider upon measurements.

6.5 *RMS Voltmeter, V*—A true rms responsive voltmeter shall be used to indicate the rms voltage for exciting power

TABLE 1 Test Coils for *EI* Laminations Used at 60 Hz in Power Applications, Category 1

NOTE 1—Winding forms should allow for at least 0.030-in. [0.076-cm] clearance between lamination stack and coil form, and its walls should not be thicker than necessary to provide adequate insulation and strength for coil support.

NOTE 2—These coils are also suitable for use at 50 Hz and other frequencies.

NOTE 3—N_3 winding is required for setting induction when incremental properties are to be measured or where other instruments interfere with induction measurements. It is composed of one layer of No. 34 wire so that $N_3 = 5\sqrt{2}\pi\ l_1$ (where l_1 is the magnetic path length).

Lamination					Test Winding (see 6.2.1)								
Center Leg					N_1			N_2			N_3		
Width (w)		Length Relative to w	Stack Height (h)		Turns	Wire Size	Resistance, Ω	Turns	Wire Size	Resistance, Ω	Turns	Wire Size	Resistance, Ω
in.	cm		in.	cm									
⅜	0.9525	1.5w	¾	1.905	1000	35	84.3	1000	35	103.8	64	34	2.84
½	1.270	1.5w	1	2.540	800	34	68.3	800	34	80.7	72	34	4.00
⅝	1.588	1.5w	⅞	2.222	800	33	56.6	800	33	67.8	83	34	5.54
¾	1.905	1.5w	¾	1.905	800	31	36.6	800	31	43.5	100	34	7.77
⅞	2.222	1.5w	⅞	2.222	588	28	15.4	588	28	18.1	116	34	9.86
15⁄16	2.381	1.5w	15⁄16	2.381	513	26	8.75	513	26	10.6	136	34	12.8
1	2.540	1.5w	1	2.540	450	25	6.02	450	25	7.44	133	34	13.3
1⅛	2.857	1.5w	1⅛	2.857	356	24	4.45	356	24	5.37	150	34	16.7
1¼	3.175	1.5w	1¼	3.175	288	22	2.43	288	22	2.92	167	34	20.4
1⅜	3.493	1.5w	1⅜	3.493	238	20	1.43	238	20	1.75	183	34	24.3
1½	3.810	1.5w	1½	3.810	200	18	0.82	200	18	0.98	200	34	28.8
1⅝	4.127	1.5w	1⅝	4.127	170	14	0.35	170	14	0.46	245	34	38.0
1¾	4.445	1.5w	1¾	4.445	147	16	0.45	147	16	0.52	233	34	38.7
2⅛	5.397	1.5w	2⅛	5.397	100	12	0.16	100	12	0.20	283	34	56.6
2¼	5.715	1.5w	2¼	5.715	89	10	0.11	89	10	0.13	320	34	67.5
2½	6.350	1.5w	2½	6.350	72	10	0.10	72	10	0.11	333	34	73.9
3	7.62	1.5w	1½	3.810	76	10	0.11	76	10	0.11	400	34	111.0
4	10.16	1.5w	2	5.080	57	10	0.09	57	10	0.10	534	34	148.0

--`,,`,,`,`,,`---

Copyright ASTM International
Provided by IHS under license with ASTM
No reproduction or networking permitted without license from IHS
Not for Resale

TABLE 2 Test Coils for *EI* Laminations Used in General Magnetic Applications, Category 2

NOTE 1—Winding forms should allow for at least 0.030-in. [0.076-cm] clearance between lamination stock and coil form, and its walls should be not thicker than necessary to provide adequate insulation and strength for coil support.

NOTE 2—These coils may be used at any frequency where voltage does not become excessively large.

NOTE 3—N_3 winding is required for setting production when incremental properties are to be measured or other instruments interfere with induction measurements. It is composed of one layer of No. 34 wire so that $N_3 = 5\sqrt{2}\pi\, l_1$ (where l_1 is the magnetic path length).

Lamination					Test Windings (see 6.2.2)								
Center Leg					N_1			N_2			N_3		
Width (w)		Length Relative to w	Stack Height (h)		Turns	Wire Size	Resistance, Ω	Turns	Wire Size	Resistance,Ω	Turns	Wire Size	Resistance, Ω
in.	cm		in.	cm									
3/16	0.4763	1.5w	3/16	0.4763	722	36	24.2	32	30	0.37	36	34	0.997
1/4	0.635	1.5w	1/4	0.635	888	36	26.3	36	40	0.82	44	34	1.47
3/8	0.9525	1.5w	3/8	0.9525	1278	36	127.8	40	24	0.30	64	34	2.84
1/2	1.270	1.5w	1/2	1.270	1444	36	180.4	60	24	0.42	72	34	4.00
5/8	1.588	1.5w	5/8	1.588	1666	36	263.2	75	24	0.58	83	34	5.53
11/16	1.746	1.5w	11/16	1.746	1822	36	294.4	82	23	0.55	92	34	6.64
3/4	1.905	1.5w	3/4	1.905	2000	35	278.0	90	21	0.42	100	34	7.77
7/8	2.222	1.5w	7/8	2.222	2333	34	295.7	105	21	0.45	116	34	10.3
15/16	2.381	1.5w	15/16	2.381	2711	34	374.6	122	20	0.55	136	34	12.8
1	2.540	1.5w	1	2.540	2666	34	373.9	120	20	0.55	133	34	13.3

TABLE 3 Test Coils for *EI* Laminations Used at 400 Hz in Power and Other Applications, Category 1

NOTE 1—Winding forms should allow for at least 0.030-in. [0.076-cm] clearance between lamination stack and coil form, and its walls should be not thicker than necessary to provide adequate insulation and strength for coil support.

NOTE 2— These coils are also suitable for use at other frequencies.

NOTE 3—This winding is required for setting induction when incremental properties are to be measured or where other instruments interfere with induction measurements. It is composed of one layer of No. 34 wire so that $N_3 = 5\sqrt{2}\pi\, l_1$ (where l_1 is the magnetic path length).

Lamination					Test Windings (see 6.2.3)									Ratio
Center Leg					N_1			N_2			N_3			
Width (w)		Length Relative to w	Stack Height (h)		Turns	Wire Size	Resistance,Ω	Turns	Wire Size	Resistance, Ω	Turns	Wire Size	Resistance, Ω	$G = A_{ss}/A_s$
in.	cm		in.	cm										
3/8	0.9525	1.5w	3/8	0.9525	458	33	19.06	458	33	24.2	64	34	2.84	1.308
1/2	1.270	1.5w	1/2	1.270	262	30	6.46	262	30	7.68	72	34	4.00	1.327
5/8	1.588	1.5w	5/8	1.588	162	27	2.37	162	27	2.74	83	34	5.52	1.329
3/4	1.905	1.5w	3/4	1.905	134	24	1.16	134	24	1.38	100	34	7.77	2.519
7/8	2.222	1.5w	7/8	2.222	82	20	0.34	82	20	0.40	116	34	10.3	3.407
1	2.540	1.5w	1	2.540	62	20	0.29	62	20	0.32	133	34	13.3	4.425

measurements. It may also be used for evaluating the form factor of the voltage induced in the secondary of the test fixture and for evaluating instrument losses. The accuracy of the rms voltmeter shall be the same as that specified for the flux voltmeter. Either digital or analog voltmeters are permitted. The normally high-input resistance of the digital rms voltmeters is desirable to minimize loading effects. The input resistance of an analog rms voltmeter shall not be less than 1000 Ω/V of full-scale indication.

NOTE 1—Many electronic voltmeters are either peak responsive or average responsive in their indications. Although these meters may have scales that are marked *RMS Volts*, they should not be used for rms current or rms voltage measurements when distorted waves are present. They may indicate the rms values of voltages with little distortion but should not be relied upon for rms voltage measurements in magnetic test circuits. When flux is held closely sinusoidal, these probable errors can sometimes be ignored for rms voltage measurements at the lower inductions. However, the current waveform under these conditions always has too much distortion for proper use of one of these instruments as an rms ammeter.

6.6 *RMS Ammeter*—A true rms responsive meter shall be used to measure the rms exciting current for calculating exciting power or magnetizing force, H_z, for impedance permeability. This meter may be either an electronic or analog type. An analog instrument may be a moving iron-vane, thermal, or electrodynamometer type. Sufficient current ranges should be provided to cover the desired range of exciting currents. This meter shall have an accuracy of 1 % of full-scale indication or better. Its internal impedance should be less than 0.1 Ω for testing Category 1 cores. For Category 2 cores in which the test coil resistance is already high, the ammeter's input resistance may be higher (Note 2). A true rms responsive voltmeter (Note 1) of suitable accuracy connected across an ammeter shunt resistor provides an rms ammeter having an adequate range and ability of adjustment.

NOTE 2—At any test induction the voltage drop across the rms ammeter (or shunt resistor) should be less than 1 % of the voltage across the test coil primary windings.

6.7 *Ammeter Shunt Resistor, R_1*—This is a high quality resistor that is placed in series with the primary test winding and shall carry the full primary exciting current. A voltmeter across its terminal completes an ammeter.

Copyright ASTM International
Provided by IHS under license with ASTM
No reproduction or networking permitted without license from IHS

Not for Resale

6.7.1 This resistor should have an accuracy of at least 0.1 % and should have a very low-temperature coefficient so that its errors do not appreciably increase the overall ammeter errors.

6.7.2 When testing larger Category 1 (power size) cores at high inductions this resistor may carry several amperes and the power dissipation capabilities should be such that the maximum primary current will not result in destructive heating or loss of specified accuracy as a result of self heating.

6.7.3 For smaller cores tested at low or moderate inductions, the power dissipation capabilities may be as low as 5 W without causing errors as a result of self heating.

6.8 *Tapped Transformer*—This transformer shall be capable of supplying sufficient current and voltage for the excitation of all common Category 1 (power size) laminations. Its core should consist of high-quality silicon iron laminations and be designed to operate at inductions of 12 kG or below and should be able to handle 750 to 1000 VA when operating at a primary voltage of 115 V and 60 H_z. For convenience, it should have taps at 50, 75, 100, and 125 V. Lower voltage taps may also be useful.

6.9 *Variable Transformer or Autotransformer*—For tests of larger Category 1 cores, the variable transformer or autotransformer should have a rating of 1 or 1.5 kVA. For Category 2 or smaller Category 1 cores it is often desirable to use a smaller variable transformer because it may provide smaller steps of voltage adjustment.

6.10 *Choke Coil*—This is a high-inductance choke coil having an air gap to prevent magnetic saturation. It shall have a wire size sufficiently large to handle the dc incremental currents and a core size and number of turns that provide sufficient inductance to meet the requirements of 9.5.7.

6.11 *Power Source*—To provide satisfactory voltage stability it is recommended that a 1-kVA constant voltage transformer of good quality be used. It shall have voltage regulation of at least 1 % and harmonic correction or filtering to provide a voltage waveform which has 3 % or less harmonic distortion. For more precise testing, both voltage regulation and harmonic distortion should be no larger than 0.1 %.

NOTE 3—Test power may alternatively be supplied by an electronic source of sinusoidal test power that is characterized by low internal impedance and excellent voltage and frequency stability. Voltage stability within 0.1 % and frequency accuracy within 0.1 % should be maintained. The tapped transformer and variable transformer may not be needed when such test power sources are used. Electronic power sources using negative feedback from the secondary winding of the test fixture to reduce flux waveform distortion may be used.

6.12 *Wattmeter*—An electronic wattmeter with appropriate voltage, current, and frequency ratings is the preferred instrument. The voltage circuit shall be capable of accepting the maximum peak voltage that is induced in the secondary winding during testing. The current input circuitry shall be capable of handling the maximum rms current and the maximum peak current drawn by the primary winding of the test fixture when core loss tests are being performed. The wattmeter shall be capable of accurate measurements at all frequencies of interest and at low-power factors.

Alternatively, a direct reading low-power factor electrodynamometer wattmeter of high sensitivity may be used. For general testing the resistance of the potential circuit of this instrument should not be less than 100 Ω/V of full-scale potential-circuit voltage rating. The inductance of the potential-circuit coil should be such that the inductive reactance at the test frequency will not exceed 1 Ω per 1000 Ω of resistance of this circuit unless the potential circuit is compensated for its reactance.

7. Test Specimen

7.1 The test specimen may consist of any size lamination described in Table 4. It shall be composed of sufficient laminations to provide a lamination stack having a square cross section in the leg which is to be surrounded by the test winding (lamination stack height equal to center leg width).

7.2 If the test specimen consists of *EI*, *UI*, *EE*, or other two-piece laminations, there shall be equal numbers of both types in the test specimen. If it consists of an *F* type or other one-piece lamination, there shall be an even number of laminations in the test specimen.

8. Test Specimen Preparation

8.1 Check the specimen before test to see that it contains no dented or bent pieces and that the laminations are reasonably flat, without noticeable curvature.

8.2 Weigh the part of the test specimen upon which calculations are based with a balance of sufficient sensitivity and accuracy to determine the specimen mass to an accuracy of 0.1 %. This eliminates the mass as a source of testing error and assures that any rounding of test specimen mass will be in the correct direction.

8.3 When correlations are to be obtained between the properties of the lamination stack and the properties of the magnetic material of which it is composed, the laminations shall have a proper stress-relieving anneal after punching and before test.

8.4 The laminations shall be assembled into the test coils by alternatively interleaving the joints (Note 4) *one by one* unless otherwise agreed upon between the producer and the user. Take care to have all burrs the same direction, for example, burrs *up* on both *E*s and *I*s (or other shapes). One method of stacking is to set equal height piles of *E*s and *I*s on either side of the coil with its cover plate inverted. (The test fixture is described in Appendix X2.) Beginning with the left hand pick up an *E*, insert it, repeat with right hand. Simultaneously use other hand to place an *I*. Keep *E*s and *I*s from butting as the whole stack can be butted closely afterwards. Continue stacking *E*s and *I*s until desired stack height is reached. Insert final missing *I* at bottom. Butt pile, invert, and place into stand.

NOTE 4—Care should be exercised in stacking the core to avoid bending any of the laminations beyond their elastic limit or otherwise damaging them unduly.

8.5 The winding forms for the test coils shall provide a clearance of 1/32 in. [0.8 mm] over the lamination stack width to prevent binding and permit ease of stacking the laminations during assembly. This also provides freedom of lamination movement to facilitate good joint alignment after the coils are energized before and during test.

8.6 When making measurements the test specimen and coil assembly shall be held loosely in a test fixture similar to that of

Copyright ASTM International
Provided by IHS under license with ASTM
No reproduction or networking permitted without license from IHS
Not for Resale

TABLE 4 Dimensional Characteristics of *EI* Lamination Stacks

Lamination			*E* Lamination Only					*EI* Combined				
Size	Special Features	Computer Code	Center Leg Width (w)		Center Leg Length Relative to Width	One Side Surface Area (A_s)		One Side Surface Area (A_{ss})		Magnetic Path Length (l_1)		Ratio $G = A_{ss}/A_s$
			in.	cm		in.^{2}	cm^2	in.^{2}	cm^2	in.	cm	
EI-18	SHT	...	3/16	0.4761	...	0.1985	1.281	0.2680	1.729	...	...	1.350
EI-18	H	...	3/16	0.4761	...	0.2336	1.507	0.3031	1.956	...	...	1.298
EI-18	NO	0018	3/16	0.4761	1.5w	0.2344	1.512	0.2947	1.901	1.625	4.127	1.300
EI-25	...	0025	1/4	0.6350	1.5w	0.3733	2.409	0.4965	3.203	2.000	5.080	1.330
EI-	...	...	1/4	0.6350	...	0.3750	2.420	0.5000	3.226	...	...	1.333
EI-31	...	0031	5/16	0.7938	1.5w	0.6962	4.492	0.9042	5.834	2.937	7.460	1.299
EI-37	...	0037	3/8	0.9525	1.5w	0.8134	5.248	1.064	6.865	2.875	7.302	1.308
EI-50	...	0050	1/2	1.270	1.5w	1.206	7.781	1.600	10.32	3.250	8.255	1.327
EI-62	...	0062	5/8	1.588	1.5w	1.746	11.27	2.319	14.96	3.750	9.525	1.329
EI-62	LH	0063	5/8	1.588	...	...	...	...	...	...	...	...
EI-68	...	0068	11/16	1.746	1.5w	2.115	13.65	2.811	18.14	4.125	10.48	1.329
EI-75	VOP	0074	3/4	1.905	...	...	...	...	...	...	...	...
EI-75	Std.	0075	3/4	1.905	1.5w	2.519	16.25	3.350	21.61	4.500	11.43	1.330
EI-75	S	0076	3/4	1.905	...	2.473	15.96	3.260	21.03	...	...	1.318
EI-75	H2L	0077	3/4	1.905	...	...	...	...	...	...	...	...
EI-75	H2L	0078	3/4	1.905	...	...	...	...	...	...	...	...
EI-75	H4	0079	3/4	1.905	...	...	...	...	...	...	...	...
EI-87	H	0087	7/8	2.222	1.5w	3.407	21.98	4.517	29.14	5.250	13.34	1.326
EI-87	HS	0088	7/8	2.222	...	3.355	21.65	4.416	28.49	...	...	1.317
EI-87	RH	0089	7/8	2.222	...	3.407	21.98	4.517	29.14	...	...	1.326
EI-93	...	0092	15/16	2.381	...	...	...	...	...	...	...	...
EI-93	H	0093	15/16	2.381	1.5w	4.261	27.49	5.502	35.50	6.125	15.56	1.312
EI-93	HS	0094	15/16	2.381	...	4.204	27.12	5.479	35.35	...	...	1.303
EI-93	H6	0095	15/16	2.381	...	...	...	...	...	...	...	...
EI-100	H	0100	1	2.540	1.5w	4.425	28.55	5.850	37.74	6.000	15.24	1.322
EI-100	RH	0102	1	2.540	...	4.425	28.55	5.850	37.74	...	...	1.322
EI-100	HS	0101	1	2.540	...	4.366	28.17	5.735	37.00	...	...	1.313
EI-100	RHS	0103	1	2.540	...	4.366	28.17	5.735	37.00	...	...	1.313
EI-112	H	0112	1 1/8	2.857	1.5w	5.620	36.25	7.443	48.02	6.750	17.15	1.324
EI-112	RH	0114	1 1/8	2.857	...	5.620	36.26	7.443	48.02	...	...	1.324
EI-112	HS	0113	1 1/8	2.857	...	5.555	35.84	7.315	47.20	...	...	1.317
EI-112	RHS	0115	1 1/8	2.857	...	5.555	35.84	7.315	47.20	...	...	1.317
EI-125	H	0125	1 1/4	3.175	1.5w	6.956	44.88	9.225	59.52	7.500	19.05	1.326
EI-125	RH	0127	1 1/4	3.175	...	6.956	44.88	9.225	59.52	...	...	1.326
EI-125	HS	0126	1 1/4	3.175	...	6.891	44.46	9.096	58.69	...	...	1.320
EI-125	RHS	0128	1 1/4	3.175	...	6.891	44.46	9.096	58.69	...	...	1.320
EI-125	H6	0129	1 1/4	3.175	...	...	...	...	...	...	...	...
EI-137	H	0136	1 3/8	3.493	...	8.433	54.41	11.19	72.20	...	...	1.327
EI-137	HS	0137	1 3/8	3.493	1.5w	8.343	53.83	11.02	71.10	8.250	20.06	1.320
EI-137	RH	0138	1 3/8	3.493	...	8.433	54.41	11.19	72.20	...	...	1.327
EI-137	RHS	0139	1 3/8	3.493	...	8.343	53.83	11.02	71.10	...	...	1.320
EI-140	RH	0140	1 3/8	3.493	1.5w	9.206	59.40	12.22	78.84	9.000	22.86	1.328
EI-137	RH6	0141	1 3/8	3.493	1.5w	8.395	54.16	11.12	71.75	9.000	22.86	1.324
EI-150	H	0150	1 1/2	3.810	1.5w	10.05	64.84	13.35	86.13	9.000	22.86	1.328
EI-150	HS	0151	1 1/2	3.810	...	9.952	64.21	13.16	84.91	...	...	1.322
EI-150	RH	0152	1 1/2	3.810	...	10.05	64.84	13.35	86.13	...	...	1.328
EI-150	RHS	0153	1 1/2	3.810	...	9.952	64.21	13.16	84.91	...	...	1.322
EI-150	LH	0154	1 1/2	3.810	...	17.92	115.6	22.35	144.2	...	...	1.247
EI-162	H	0162	1 5/8	4.127	1.5w	13.13	84.71	17.72	114.3	11.00	27.94	1.350
EI-162	HS	0163	1 5/8	4.127	...	12.99	83.81	17.45	112.6	...	...	1.343
EI-175	H	0175	1 3/4	4.445	1.5w	13.66	88.13	18.13	117.0	10.50	26.67	1.327
EI-175	HS	0176	1 3/4	4.445	...	13.62	87.88	18.06	116.5	...	...	1.326
EI-175	RH	0177	1 3/4	4.445	...	13.66	88.13	18.13	117.0	...	...	1.327
EI-175	H6	0179	1 3/4	4.445	...	13.56	87.49	17.94	115.7	...	...	1.323
EI-19	H	0190	1 3/4	4.445	1.5w	16.51	106.5	22.53	145.4	13.00	33.02	1.364
EI-212	H	0212	2 1/8	5.397	1.5w	20.15	130.0	26.76	172.7	12.75	32.39	1.328
EI-225	S	0221	2 1/4	5.715	1.5w	24.81	160.1	33.52	216.3	14.38	36.51	1.351
EI-225	RH	0225	2 1/4	5.715	1.5w	22.63	146.0	30.07	194.0	13.50	34.29	1.329
EI-225	L	0230	2 1/4	5.715	1.5w	40.82	263.4	49.52	319.5	21.38	54.29	1.213
EI-250	R4N	0249	2 1/2	6.350	...	27.89	179.9	37.02	238.9	...	...	1.328
EI-250	R6N	0250	2 1/2	6.350	1.5w	27.77	179.2	36.78	237.3	15.00	38.10	1.325
EI-250	R6W	0251	2 1/2	6.350	1.5w	38.42	247.9	49.34	318.3	20.00	50.80	1.284
EI-3	RH1	0300	3	7.620	1.5w	40.28	259.9	53.56	345.6	18.00	45.72	1.330
EI-3	RH2	0301	3	7.620	...	40.28	259.9	53.56	345.6	...	...	1.330
EI-3	H4	6300	3	7.620	...	40.39	260.6	53.78	344.0	...	...	1.332
EI-4	R6	0400	4	10.16	1.5w	71.61	462.0	95.22	614.4	24.00	60.96	1.330

Copyright ASTM International
Provided by IHS under license with ASTM
No reproduction or networking permitted without license from IHS
Not for Resale

Appendix X2 which permits the proper alignment of the joints by forces of magnetic attraction developed when the core is energized to high inductions. Bolting or clamping of the test specimen should be avoided as this introduces variation which is not reproducible. The cover plate (*D*) shown in the test fixture described in Appendix X2 should be used to provide a mild top pressure.

9. Procedure

9.1 *Preliminary Procedures*—Examine the test specimen for damage or improper preparation.

9.1.1 Select the proper number of laminations (Section 7) to form the test specimen.

9.1.2 Then weigh the portion of the test specimen that is to be used in the calculation of cross-sectional area in accordance with 8.2.

9.1.3 Then stack the test specimen (see 8.4) into a test coil of suitable size and number of turns appropriate for use in conducting the desired tests.

NOTE 5—The number and type of tests desired, as well as available equipment, may influence the test coil selection. For these reasons the coil selected shall be a matter of agreement between the producer and the user.

9.1.4 Assemble the stacked test specimen and coil into the test jig as shown in Appendix X2 and connect into the appropriate test equipment of Fig. 1 or Fig. 2.

9.2 *Procedures for Core-Loss Measurements*:

9.2.1 Connect the equipment as shown in Fig. 1 (see Note 6). Unless otherwise specified, the test coil shall be one of those of Table 1 for Category 1 cores.

NOTE 6—Switches *S*1 through *S*6 may be omitted if impedances of measurement instruments are such as to cause negligible error in results.

9.2.2 Determine the flux voltages induced in the secondary winding, N_2, at the desired test inductions.

9.2.3 Open switches *S*4 and *S*5 and close switches *S*3, *S*6, *S*1, and *S*2. Set *S*8 to the lowest tap that permits excitation of the test specimen to an induction level of 15 kG (1.5 T). Set and maintain an induction of approximately 15 kG in the test specimen while tapping the edges of the stack with a small, soft-surfaced mallet. Observe the reading on the ammeter that measures primary current and continue tapping until the current reaches a minimum value. This procedure reduces the air gaps to a minimum value.

9.2.4 Demagnetize the specimen by slowly reducing the excitation from the lowest level of 9.2.3 to the lowest setting of the variable transformer or autotransformer. This shall be accomplished with a steady uniform motion, free of hesitations or reversals. Randomly variable contacts tend to generate magnetizing force transients which may degrade the quality of the demagnetization.

9.2.5 With *S*6 open and *S*4 and *S*5 closed, set the flux voltage, E_f, to the value corresponding to the lowest induction at which core losses are to be measured. Then read the wattmeter and record the power reading for that induction. In ascending order of inductions, repeat the measurement procedure for other inductions.

9.3 *Procedures for RMS Excitation and RMS Exciting Power*:

9.3.1 The equipment and test coil are connected as for core loss in 9.2.1.

9.3.2 Determine the flux voltages induced in the secondary winding, N_2, at the desired test inductions.

9.3.3 Open switches *S*4 and *S*5 and close switches *S*3, *S*6, *S*1, and *S*2 as for core loss in 9.2.3. Then demagnetize the test specimen using the procedure described in 9.2.3 and 9.2.4.

9.3.4 With *S*3 and *S*4 open and *S*6, *S*1, and *S*2 closed, set the flux voltage to the value corresponding to the lowest desired test induction. Then open *S*2 and quickly read and record the rms voltage. Close *S*2 to check the induction setting; then open both *S*5 and *S*2 and quickly read and record the value of rms current. In ascending order of inductions, repeat the measurement procedure for other inductions.

9.4 *Procedures for Apparent ac Magnetizing Force, H_z, and Impedance Permeability, μ_z*:

9.4.1 For this measurement, the equipment is usually connected as shown in Fig. 2 and, unless otherwise specified, the test coil shall be one of those of Table 2 for Category 2 cores.

9.4.2 Determine the flux voltages induced in the secondary winding, N_2, at the desired test inductions.

9.4.3 Close switch *S*1 and set *S*8 to the lowest tap which permits excitation of the test specimen to an induction level of 15 kG [1.5 T]. Set and maintain an induction of approximately 15 kG in the test specimen while tapping the edges of the stack with a small, soft-surfaced mallet. Observe the reading on the ammeter that measures primary current and continue tapping until the current reaches a minimum value. This procedure reduces the air gaps to a minimum value.

9.4.4 Observing the precautions of 9.2.4, demagnetize the test specimen by slowly and uniformly reducing the excitation to a zero field level.

9.4.5 With *S*1 open and *S*2 set to connect the flux voltmeter, V_f, to the secondary winding, N_2, set the flux voltage to the value corresponding to the lowest test induction. Then open *S*2 and quickly read and record the value of the rms voltage drop

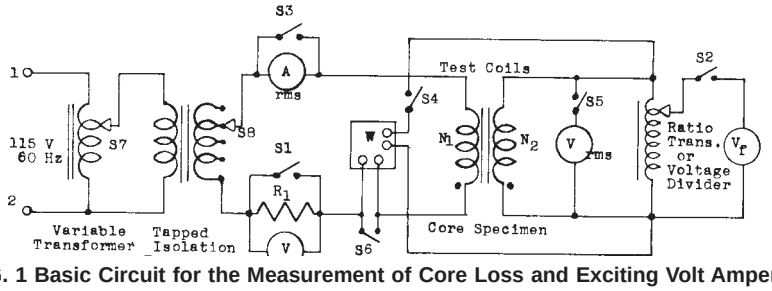

FIG. 1 Basic Circuit for the Measurement of Core Loss and Exciting Volt Amperes

Copyright ASTM International
Provided by IHS under license with ASTM
No reproduction or networking permitted without license from IHS
Not for Resale

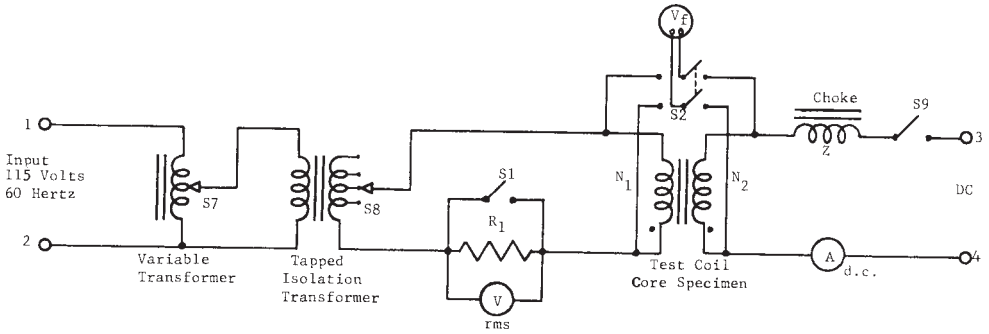

FIG. 2 Basic Circuit for the Measurement of Impedance and Incremental Permeability and the Apparent A-C Magnetizing Force

across resistor, R_1. Close *S*2 across winding N_2 and, in order of ascending induction, repeat the measurement procedure for all desired test inductions.

9.5 *Procedures for Determining Incremental Impedance Permeability*:

9.5.1 Connect the equipment as for impedance permeability testing, 9.4.1, and Fig. 2. The choke coil and dc power supply are now used to excite the secondary winding, N_2.

9.5.2 Determine the flux voltages induced in the primary winding, N_1, at the desired test inductions.

9.5.3 With switch *S*9 open, close switch *S*1 and set *S*2 to connect the flux voltmeter, V_f, to the secondary winding, N_2. Then perform the air gap adjustment procedures of 9.4.3 and the demagnetization procedures of 9.4.4.

9.5.4 With switches *S*1 and *S*9 open and switch *S*2 set to connect the flux voltmeter, V_f, to the primary winding, N_1, set the flux voltage to the lowest ac test induction. Then close *S*9 and slowly raise the dc current to the lowest value of dc incremental field strength. Then read and record the value of the rms voltage drop across resistor R_1. Raise the dc incremental field strength to a new value and again record the voltage drop across resistor R_1. Other incremental fields may be applied in ascending order (see 9.5.7 for impedance requirements in the incremental circuit).

9.5.5 Repeat the demagnetization procedures of 9.5.3. Raise the ac induction to a new level and repeat the incremental procedures of 9.5.4. Repeat this procedure for each of the desired ac inductions and values of dc incremental field.

9.5.6 Induction cannot be set precisely when the flux voltmeter is connected across the primary winding, N_1. For greater precision and for referee testing, measurements for incremental impedance permeability should be made with test coils having a tertiary winding, N_3. This permits the flux voltmeter to be connected across winding N_3 rather than the primary winding, N_1, or the secondary winding, N_2, as in 9.5.3 and 9.5.4.

9.5.7 The adequacy of the series impedance in the dc incremental biasing circuit must be tested before making incremental measurements. Open switches *S*1 and *S*9 and set *S*2 to connect the flux voltmeter to the primary winding, N_1. Then disconnect the dc power supply from Terminals 3 and 4 and replace it with a shorting bar. Set the ac induction to the highest value of incremental induction to be used. While observing the rms voltage drop across resistor R_1, close switch *S*9. The addition of the incremental circuit impedance as a load on the secondary winding, N_2, shall not increase the rms exciting current reading by more than 1 %.

10. Calculation (U.S. Customary Units)

10.1 The cross-sectional area of the test specimen is often calculated from the mass of the *E* laminations, the density of the material, and the surface area of the *E* lamination. The equation for the cross-sectional area of the core is:

$$A = wm_2/A_s\delta \tag{1}$$

where:

A = effective cross-sectional area of core, cm^2;
w = width of the lamination's center leg, cm;
m_2 = mass of core laminations, *E* section only, g;
A_s = area of one surface of the *E* lamination, cm^2; and
δ = standard density of specimen material (see Practice A 34/A 34M), g/cm^3.

10.2 *Flux Voltage*—The flux voltage at the desired test induction is calculated from the basic voltage equation:

$$E_f = \sqrt{2}\pi BANf \times 10^{-8} \tag{2}$$

where:

E_f = flux voltage induced in winding *N*, V;
B = maximum flux density, G;
A = effective cross-sectional area of core, cm^2;
N = number of turns in winding *N* usually the secondary winding, N_2; and
f = frequency, H_z.

10.3 *Magnetizing Force*—From the basic equation for magnetizing force, $H_p = N_1I_p/l_1$, where I_p is always equal to $I_{p-p}/2$ and the current is assumed to have symmetrical positive and negative half cycles, the equation for magnetizing force from rms current is:

$$H_Z = 0.4\pi\sqrt{2}N_1I/l_1 \tag{3}$$

where:

H_Z = apparent ac magnetizing force, Oe;
N_1 = number of turns in magnetizing winding;
I = rms value of exciting current, A; and
l_1 = effective magnetic path length, cm.

10.3.1 During incremental tests a biasing magnetizing force is usually applied by passing dc current through the N_2 winding during test. The N_3 winding is then used for setting induction. The equation for the biasing magnetizing force is:

Copyright ASTM International
Provided by IHS under license with ASTM
No reproduction or networking permitted without license from IHS
Not for Resale

$$H_{dc} = N_2 I_{dc}/l_1 \quad (4)$$

where:
H_{dc} = biasing magnetizing force, Oe;
N_2 = number of turns in bias winding; and
I_{dc} = dc value of bias current, A.

10.4 *Impedance Permeability*—The equation for the impedance permeability is:

$$\mu_Z = B/H_Z \quad (5)$$

where:
μ_Z = impedance permeability;
B = maximum flux density, G; and
H_Z = apparent ac magnetizing force, Oe.

10.4.1 Incremental impedance permeability is calculated from the following equation:

$$\mu_Z = B/H_Z \quad (6)$$

where:
μ_Z = incremental impedance permeability;
B = maximum flux density, G; and
H_Z = apparent ac magnetizing force, Oe.

10.5 *Specific Core Loss*—Calculation of core loss when using the Category 1 coils of Table 2.

10.5.1 To calculate the specific core loss of the lamination stack under test, it is necessary to subtract all secondary circuit power losses included in the wattmeter indication before dividing by the active mass of the specimen, so that for a specific induction and frequency the specific core loss in watts per pound is as follows:

$$P_{C(B;f} = 453.6(W - V^2/R)/m_1 \quad (7)$$

where:
$P_{C(B;f)}$ = specific core loss at induction B and frequency f, (W/lb);
W = power loss indicated by the wattmeter, W;
V = rms value of secondary voltage, V;
R = effective secondary resistance, Ω; and
m_1 = mass, g.

10.6 *Specific Exciting Power*—Specific exciting power is calculated from the rms value of current in the primary winding and the rms value of the voltage induced in the secondary winding with all other secondary burden removed. The equation is:

$$P_{Z(B;f} = 453.6P_Z/m_1 = 453.6VI/m_1 \quad (8)$$

where:
$P_{Z(B;f)}$ = specific exciting power at induction B and frequency f, (VA/lb);
V = rms value of secondary voltage, V;
I = rms value of exciting current, A; and
m_1 = mass, g.

11. Calculation (SI Units)

11.1 The cross-sectional area of the test specimen is often calculated from the mass of the *E* laminations, the density of the material and the surface area of the *E* lamination. The equation for the cross-sectional area of the core is:

$$A = wm_2/A_s\delta \quad (9)$$

where:
A = effective cross-sectional area of core, m^2;
w = width of the lamination's center leg, m;
m_2 = mass of core laminations, *E* section only, kg;
A_s = area of one surface of the *E* lamination, m^2; and
δ = standard density of specimen material (see Practice A 34/A 34M), kg/m^3.

11.2 *Flux Voltage*—The flux voltage at the desired test induction is calculated from the basic voltage equation:

$$E_f = \sqrt{2}\pi BANf \quad (10)$$

where:
E_f = flux voltage induced in winding N, V;
B = maximum flux density, T;
A = effective cross-sectional area of core, m^2;
N = number of turns in winding N usually the secondary winding, N_2; and
f = frequency, H_z.

11.3 *Magnetizing Force*—From the basic equation for magnetizing force, $H_p = N_1 I_p/l_1$, where I_p is always equal to $I_{p-p}/2$ and the current is assumed to have symmetrical positive and negative half cycles, the equation for magnetizing force from rms current is:

$$H_Z = \sqrt{2}N_1 I/l_1 \quad (11)$$

where:
H_Z = apparent ac magnetizing force, A/m;
N_1 = magnetizing winding, turns;
I = rms value of exciting current, A; and
l_1 = effective magnetic path length, m.

11.3.1 During incremental tests a biasing magnetizing force is usually applied by passing dc current through the N_2 winding during test. The N_3 winding is then used for setting induction. The equation for the biasing magnetizing force is:

$$H_{dc} = N_2 I_{dc}/l_1 \quad (12)$$

where:
H_{dc} = biasing magnetizing force, A/m;
N_2 = bias winding, turns; and
I_{dc} = dc value of bias current, A.

11.4 *Impedance Permeability*—The equation for the impedance permeability is:

$$\mu_Z = B/H_Z \quad (13)$$

where:
μ_Z = impedance permeability;
B = maximum flux density, T; and
H_Z = apparent ac magnetizing force, A/m.

11.4.1 Incremental impedance permeability is calculated from the following equation:

$$\mu_Z = B/H_Z \quad (14)$$

where:

Copyright ASTM International
Provided by IHS under license with ASTM
No reproduction or networking permitted without license from IHS
Not for Resale

μ_Z = incremental impedance permeability;
B = maximum flux density, T; and
H_Z = apparent ac magnetizing force, A/m.

11.5 *Specific Core Loss*—Calculation of core loss when using the Category 1 coils of Table 2.

11.5.1 To calculate the specific core loss of the lamination stack under test, it is necessary to subtract all secondary circuit power losses included in the wattmeter indication before dividing by the active mass of the specimen, so that for a specific induction and frequency the specific core loss in watts per kilogram is as follows:

$$P_{C(B;f} = (W - V^2/R)/m_1 \quad (15)$$

where:
$P_{C(B;f)}$ = specific core loss at induction B and frequency f, (W/kg);
W = power loss indicated by the wattmeter, W;
V = rms value of secondary voltage, V;
R = effective secondary resistance, Ω; and
m_1 = mass, kg.

11.6 *Specific Exciting Power*—Specific exciting power is calculated from the rms value of current in the primary winding and the rms value of the voltage induced in the secondary winding with all other secondary burden removed. The equation is:

$$P_{Z(B;f)} = P_Z/m_1 = VI/m_1 \quad (16)$$

where:
$P_{Z(B;f)}$ = specific exciting power at induction B and frequency f, (VA/kg);
V = rms value of secondary voltage, V;
I = rms value of exciting current, A; and
m_1 = mass, kg.

12. Precision and Bias

12.1 The precision of setting induction is ±1.0 %.

12.2 The precision of measurement of secondary rms voltage is ±2.0 %.

12.3 The precision of measurement of rms exciting current is ±5 % at 10 kG [1.0 T] and below and is ±10 % at 15 kG [1.5 T].

12.4 The precision of exciting power measurements is ±7 % at 10 kG [1.0 T] and below and is ±12 % at 15 kG [1.5 T].

12.5 The precision of core loss measurements is ±3 % at 15 kG [1.5 T].

13. Keywords

13.1 alternating-current; core; core loss; flat-rolled; induction; laminated core; lamination; magnetic; magnetic material; magnetic test; permeability; transformer

APPENDIXES

(Nonmandatory Information)

X1. PROCEDURES FOR TESTING LAMINATED CORE SPECIMENS HAVING NONUNIFORM CROSS-SECTIONAL AREA OVER THE MAGNETIC PATH

X1.1 If the test specimen has non-uniform cross section over its magnetic path, the following method of testing may be useful.

X1.1.1 *Laminations with Uniform Cross Sections Except for Center Leg*

These types may be tested by causing flux to flow only through the back iron, side legs and "I." This is done by using two separate coils, one on each side leg. These coils may be connected in series or parallel but must be wound and connected so that their fluxes aid each other. Turns and wire size should be selected to match the test power supply. Primary and secondary windings should be of the same gage, secondary wound closest to the core and the primary wound over the secondary with insulating paper and tape between the primary and secondary windings. Where user and producer are to compare results, all details of the wound coils should be duplicated.

X1.1.2 *Laminations with Nonuniform Cross Section*

This includes all shapes in which the flux density cannot be uniform over the full magnetic path. Place the test coil on the longest available uniform portion of the magnetic path length. The coil should cover as much of this length as practicable keeping the inside of the coil to within 1/16 in. of the stack leg. Assume the cross section for calculation of induction to be that of the stack portion under the coil.

X1.1.3 Run a number of test points at lower and higher inductions than nominal comprising a table or curve of values and use this table for reference as a standard. This curve or a selected point on this curve may be used in making future comparisons.

Copyright ASTM International
Provided by IHS under license with ASTM
No reproduction or networking permitted without license from IHS
Not for Resale

X2. CONSTRUCTION DETAILS OF STANDARD TEST COILS AND TEST FIXTURE

X2.1 Test Coils

X2.1.1 Standard test coils for *EI* laminations should consist of a secondary winding N_2 applied directly over a nonmagnetic, nonconducting form of square cross section providing just sufficient clearance to admit the lamination without difficulty. A separate exciting winding N_1 should be wound over the secondary winding and separated from it by insulating material a few thousandths of an inch thick. Each winding should cover a span of at least 80 % of the available length of the core member carrying the coil. All layers of each winding should be complete (distributed over the desired winding span). Insulation between layers and coils should be thin as practical. In many sizes of test coils, it is possible to place two exciting windings in the available window space along with the required secondary winding. Such three-winding coils permit the design of suitable exciting windings for the bridge test (winding N_1) and for the direct reading of exciting ampere-turns per unit length (winding N_p). The winding specfications of Table 2 are suggested for test coils used with scrapless *EI* laminations.

X2.2 Test Fixture for *EI* Lamination Cores

X2.2.1 The principal features of a test fixture designed to hold a lamination core in such a way as to encourage the joints to become properly aligned during magnetization, and yet not permit laminations to shift from their proper positions thereafter, are shown in Fig. X2.1(*a*). The fixture consists essentially of three flat plates arranged at exactly 90° to each other and intersecting at a common corner. These plates may be of brass, fiber, or other nonmagnetic material. One of these, the base plate, *A*, has the length and width of the lamination it must accommodate and has its center portion machined out to provide an opening for the test coil to project through when a stacked core is placed on the base plate. The intersecting perpendicular side plates, *B* and *C*, are attached firmly to the base plate and to each other where they intersect. This assembly of plates is mounted on a suitable base by means of brackets that hold the assembly in such a position that, when used on a horizontal surface, the three intersecting planes are tipped so that the assembly approaches a position of resting on the intersecting corner. In the desired final position, the angles between bottom edge of the side members, *B* and *C*, and the horizontal mounting base will approximate 22½ ° which results in the bisector of the intersecting angle in the base plate, *A*, being inclined at about 30° to the horizontal. An unattached plate, *D*, similar to the base plate, *A*, should be provided to be placed on top of the core stack to hold the top layer of laminations in place. The surface of all plates must be smooth and flat. When in use, the core is loosely stacked outside of the fixture, care being taken not to overlap any of the abutting joints of *I*s and *E*s and not to fill the coil too full because the successful use of the test fixture depends on the ability of the laminations to shift easily into positions giving best alignment of joints. Before the core is placed in the fixture, the unattached *I* lamination for the bottom layer of the stack is first placed in position on the base plate, then the core and coil lifted into place on the base plate, followed by the unattached *I* for the top layer, and finally by the top cover plate. The arrangement of parts with core in place is shown in Fig. X2.1. Final alignment of all the test pieces should take place assisted by light finger pressure along the exposed edges if necessary, when the core is excited to high inductions just preceding demagnetization.

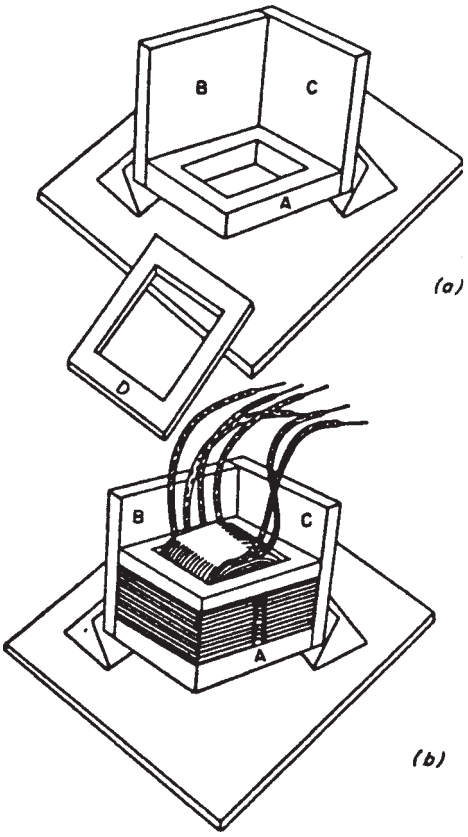

FIG. X2.1 Principal Features of Test Fixture for EI Lamination Cores

Copyright ASTM International
Provided by IHS under license with ASTM
No reproduction or networking permitted without license from IHS
Not for Resale

ASTM International takes no position respecting the validity of any patent rights asserted in connection with any item mentioned in this standard. Users of this standard are expressly advised that determination of the validity of any such patent rights, and the risk of infringement of such rights, are entirely their own responsibility.

This standard is subject to revision at any time by the responsible technical committee and must be reviewed every five years and if not revised, either reapproved or withdrawn. Your comments are invited either for revision of this standard or for additional standards and should be addressed to ASTM International Headquarters. Your comments will receive careful consideration at a meeting of the responsible technical committee, which you may attend. If you feel that your comments have not received a fair hearing you should make your views known to the ASTM Committee on Standards, at the address shown below.

This standard is copyrighted by ASTM International, 100 Barr Harbor Drive, PO Box C700, West Conshohocken, PA 19428-2959, United States. Individual reprints (single or multiple copies) of this standard may be obtained by contacting ASTM at the above address or at 610-832-9585 (phone), 610-832-9555 (fax), or service@astm.org (e-mail); or through the ASTM website (www.astm.org).

Copyright ASTM International
Provided by IHS under license with ASTM
No reproduction or networking permitted without license from IHS
Not for Resale