Designation: A 574M – 04$^{\epsilon 1}$

METRIC

Standard Specification for Alloy Steel Socket-Head Cap Screws [Metric][1]

This standard is issued under the fixed designation A 574M; the number immediately following the designation indicates the year of original adoption or, in the case of revision, the year of last revision. A number in parentheses indicates the year of last reapproval. A superscript epsilon (ε) indicates an editorial change since the last revision or reapproval.

This standard has been approved for use by agencies of the Department of Defense.

ε[1] NOTE—Sections 2.2 and 3.2.8 were editorially revised in October 2006.

1. Scope*

1.1 This specification covers the requirements for quenched and tempered alloy steel socket-head cap screws 1.6 mm through 48 mm in diameter having a minimum ultimate tensile strength of 1220 MPa.

NOTE 1—This specification is the metric companion of Specification A 574.

1.2 The following hazard caveat pertains only to the test method portion, Section 10, of this specification: *This standard does not purport to address all of the safety concerns, if any, associated with its use. It is the responsibility of the user of this standard to establish appropriate safety and health practices and determine the applicability of regulatory limitations prior to use.*

2. Referenced Documents

2.1 *ASTM Standards:* [2]

A 751 Test Methods, Practices, and Terminology for Chemical Analysis of Steel Products

D 3951 Practice for Commercial Packaging

E 3 Guide for Preparation of Metallographic Specimens

E 18 Test Methods for Rockwell Hardness and Rockwell Superficial Hardness of Metallic Materials

E 112 Test Methods for Determining Average Grain Size

E 384 Test Method for Microindentation Hardness of Materials

F 606M Test Methods for Determining the Mechanical Properties of Externally and Internally Threaded Fasteners, Washers, and Rivets [Metric]

F 788/F 788M Specification for Surface Discontinuities of Bolts, Screws, and Studs, Inch and Metric Series

2.2 *ASME Standards:*[3]

B18.3.1M Metric Socket Head Cap Screws

B18.24 Part Identifying Number (PIN) Code System Standard for B18 Fastener Products

3. Ordering Information

3.1 Orders for socket head cap screws under this specification shall include the following information:

3.1.1 Quantity (number of screws),

3.1.2 Dimensions, including nominal thread designation, thread, pitch, and nominal screw length (millimetres),

3.1.3 Name of the screw (SHCS),

3.1.4 ASTM designation and year of issue.

3.2 Orders for socket head cap screws may include the following optional requirements:

3.2.1 Inspection at point of manufacture.

3.2.2 Coating, if required (see 4.6).

3.2.3 Certified Test Reports (see 9.2).

3.2.4 Additional Testing (see 9.3 and 11.1).

3.2.5 Special Packaging (see 14.1.2).

3.2.6 Supplementary Requirement (see S1).

3.2.7 Special Requirements.

3.2.8 For establishment of a part identifying system, see ASME B18.24

4. Materials and Manufacture

4.1 The screws shall be fabricated from steel made to fine grain practice. In the event of controversy over grain size, referee tests on finished screws conducted in accordance with Test Methods E 112 shall prevail.

4.2 Screws in sizes up to M20 inclusive, and with lengths up to ten times the nominal product size or 150 mm, whichever is shorter, shall be cold headed, except that they may be hot headed by agreement of the purchaser. Larger sizes and longer

[1] This specification is under the jurisdiction of ASTM Committee F16 on Fasteners and is the direct responsibility of Subcommittee F16.02 on Steel Bolts, Nuts, Rivets, and Washers.

Current edition approved Aug. 1, 2004. Published August 2004. Originally approved in 1980. Last previous edition approved in 2000 as A 574M–00.

[2] For referenced ASTM standards, visit the ASTM website, www.astm.org, or contact ASTM Customer Service at service@astm.org. For *Annual Book of ASTM Standards* volume information, refer to the standard's Document Summary page on the ASTM website.

[3] Available from American Society of Mechanical Engineers (ASME), ASME International Headquarters, Three Park Ave., New York, NY 10016-5990.

***A Summary of Changes section appears at the end of this standard.**

Copyright © ASTM International, 100 Barr Harbor Drive, PO Box C700, West Conshohocken, PA 19428-2959, United States.

Copyright ASTM International
Provided by IHS under license with ASTM
No reproduction or networking permitted without license from IHS
Not for Resale

lengths may be cold or hot headed. Screws M42 and larger may be machined. Sockets may be forged or machined at the option of the manufacturer.

4.3 Screws in sizes up to M24 inclusive, and product lengths up to 150 mm inclusive, shall be roll threaded, except by special agreement of the purchaser. Larger products may be rolled, cut, or ground at the option of the manufacturer.

4.4 Socket-head cap screws shall be heat treated by quenching in oil from above the transformation temperature and then tempered by reheating to at least 380°C to within the hardness range specified in Table 1.

4.4.1 The minimum tempering temperature may be verified by submitting screws to 370°C for 30 min at temperature. The mean cross section hardness of three readings on the screw before and after retempering shall not differ by more than 20 DPH.

4.5 *Standard Finishes*—Unless otherwise specified, the screws shall be furnished with one of the following "standard surfaces as manufactured," at the option of the manufacturer; *(1)* bright uncoated, *(2)* thermal black oxide, or *(3)* chemical black oxide. Hydrogen embrittlement tests shall not be required for screws furnished in these conditions.

4.6 *Protective Coatings*:

4.6.1 When a protective finish other than as specified in 4.5 is required, it shall be specified on the purchase order with the applicable finish specification.

4.6.2 When protective or decorative coatings are applied to the screws, precautions specified by the coating requirements to minimize embrittlement shall be exercised.

5. Chemical Composition

5.1 The screws shall be alloy steel conforming to the chemical composition specified in Table 2. See Supplementary Requirement S1 when specific chemistry grades are required.

5.2 One or more of the following alloying elements: chromium, nickel, molybdenum, or vanadium shall be present in the steel in sufficient quantity to ensure the specified strength properties are met after oil quenching and tempering. As a guide for selecting material, an alloy steel should be capable of meeting the specified mechanical requirements if the "as oil quenched" core hardness one diameter from the point is equal to or exceeds 25 HRC + (55 × carbon content).

5.3 Product analyses may be made by the purchaser from finished screws representing each lot. The chemical composition thus determined shall conform to the requirements specified for the product analysis in Table 2.

5.4 Steel to which bismuth, selenium, tellurium, or lead has been intentionally added shall not be permitted.

5.5 Chemical analyses shall be performed in accordance with Test Methods, Practices, and Terminology A 751.

TABLE 1 Mechanical Requirements

Property class	12.9[A]
Full-size screws:	
Tensile or wedge strength, min, MPa	1220
Proof load (stress), min, MPa	970
Machined test specimen:	
Yield strength at 0.2 % offset, min, MPa	1100
Tensile strength, min, MPa	1220
Elongation in 5*D*, min, %	10[A]
Reduction of area, min, %	35
Product hardness:	
Rockwell	38 to 44 HRC
Vickers	372 to 434 DPH

[A] Elongation is 2 percentage points higher than property class 12.9.

TABLE 2 Chemical Requirements

Element	Composition, %	
	Heat Analysis	Product Analysis
Carbon	0.33 to 0.48	0.31 to 0.50
Phosphorus, max	0.035	0.040
Sulfur, max	0.040	0.045
Alloying elements	See 5.2	

6. Mechanical Properties

6.1 Socket head cap screws shall be tested in accordance with the mechanical testing requirements specified in Table 3, and shall meet the mechanical requirements in Table 1 and Table 4.

6.2 Screws in sizes 1.6 through 36-mm diameter shall be wedge tensile tested in accordance with Table 3, using wedge angles as specified in Table 5.

6.3 The hardness limits shall be met anywhere on the cross section through the threads, one diameter from the screw point as determined using Test Methods E 18.

7. Dimensions

7.1 Unless otherwise specified, the product shall conform to the requirements of ASME B18.3.1M.

8. Workmanship, Finish, and Appearance

8.1 There shall be no evidence of carburization or gross decarburization on the surfaces of the heat-treated screws when measured in accordance with 10.2.

8.2 The depth of partial decarburization shall be limited to the values in Table 6 when measured as shown in Fig. 1, and in accordance with 10.2.

8.3 The surface discontinuities for these products shall conform to Specification F 788/F 788M and the additional limitations specified herein.

8.3.1 Forging defects that connect the socket to the periphery of the head are not permissible. Defects originating on the periphery and with a traverse indicating a potential to intersect and are not permissible. Other forging defects are permissible provided those located in the bearing area, fillet, and top surfaces shall not have a depth exceeding 0.03*D* or 0.13 m, whichever is greater. For peripheral discontinuities, the maximum depth may be 0.06*D*, but not to exceed 1.6 mm (see Fig. 2).

8.3.2 Forging defects located in the socket wall within 0.1 times the actual key engagement (*T*) from the bottom of the socket are not permissible. Discontinuities located elsewhere in the socket shall not have a length exceeding 0.25 *T*, or a maximum depth of 0.03*D* not to exceed 0.13 mm (see Fig. 3).

8.3.3 Seams in the shank shall not exceed a depth of 0.03*D* or 0.2 mm, whichever is greater.

Copyright ASTM International
Provided by IHS under license with ASTM
No reproduction or networking permitted without license from IHS
Not for Resale

TABLE 3 Mechanical Testing Requirements

Item	Description	Tensile Load, min, kN	Product Length	Hardness, max	Hardness, min	Decarburization	Test Conducted Using Full-Size Product			Test Conducted using Machined Test Specimen			
							Proof Load	Wedge Tensile Strength	Axial Tensile Strength	Yield Strength at 0.2 % Offset	Tensile Strength	Elongation	Reduction of Area
1	All short lengths	. . .	≤3*D*[A]	[B]	[B]	[B]	. . .	. . .	. . .	. . .	. . .	. . .	. . .
2	Smaller SHCS	≤1200	3*D* to 300 mm	[B]	. . .	[B]	Z[C]	X[C]	. . .	. . .	. . .	. . .	. . .
3	Smaller SHCS	≤1200	Over 300 mm	[B]	. . .	[B]	. . .	X[C]	. . .	Y[C]	Y[C]	Y[C]	Y[C]
4	Larger SHCS	≥1200	>3*D*	[B]	. . .	[B]	Z[C]	. . .	X[C]	Y[C]	Y[C]	Y[C]	Y[C]

[A] *D* denotes nominal diameter of product.
[B] Denotes mandatory test.
[C] Either all tests denoted by X or all tests denoted by Y shall be performed. In case of arbitration full-size tests, denoted X, shall be decisive. Proof test denoted Z shall be conducted when purchaser requests the test in inquiry and order.

TABLE 4 Minimum Ultimate Tensile Loads

NOTE 1—All values are rounded to 3 significant digits.

Thread Size	Stress Area, mm^2	Tensile Load, min, kN	Proof Load, kN
M1.6 × 0.35	1.27	1.55	1.23
M2 × 0.4	2.07	2.53	2.01
M2.5 × 0.45	3.39	4.14	3.2
M3× 0.5	5.03	6.14	4.88
M4× 0.7	8.78	10.7	8.52
M5× 0.8	14.2	17.3	13.8
M6× 1	20.1	24.5	19.5
M8× 1.25	36.6	44.6	35.5
M10× 1.5	58.0	70.8	56.3
M12× 1.75	84.3	103	81.8
M14× 2	115	140	112
M16× 2	157	192	152
M20× 2.5	245	299	238
M24× 3	353	431	342
M30× 3.5	561	684	544
M36× 4	817	997	792
M42× 4.5	1120	1370	1090
M48× 5	1470	1790	1430

TABLE 5 Wedge Test Angle

Product	Diameter, mm	degree
Socket-head cap screws threaded 2*D* and closer to underside of head	through 20	6
	over 20 to 36	4
All other socket-head cap screws	through 12	10
	over 12 to 16	8
	over 16 to 36	6

8.3.4 No transverse discontinuities shall be permitted in the head-to-shank fillet area.

8.3.5 Threads shall have no laps at the root or on the flanks, as shown in Fig. 4. Laps are permitted at the crest (Fig. 4C) that do not exceed 25 % of the basic thread depth, and on the flanks outside the pitch cylinder. Longitudinal seams rolled beneath the root of the thread and across the crests of cut threads are acceptable within the limits of 8.3.3.

TABLE 6 Decarburization Limits for Threads[A]

Thread Pitch *P*, mm	Basic Thread Height $h = 0.6135P$ mm	$N = 3/4\ h$, min, mm
0.7	0.429	0.322
0.8	0.491	0.368
1	0.613	0.460
1.25	0.767	0.575
1.5	0.920	0.690
1.75	1.074	0.806
2	1.227	0.920
2.5	1.534	1.151
3	1.840	1.380
3.5	2.147	1.610
4	2.454	1.841
4.5	2.761	2.071
5	3.068	2.301

[A] See Fig. 4.

8.3.6 Quench cracks of any depth, any length, or in any location are not permitted.

9. Number of Tests

9.1 The requirements of this specification shall be met in continuous mass production for stock, and the manufacturer shall make sample inspections to ensure that the product conforms to the specified requirements. Additional tests of individual shipments of material are not ordinarily contemplated. A record of individual heats of steel in each test lot shall be maintained. The container shall be coded to permit identification of the lot.

9.2 When specified in the order, the manufacturer shall furnish a test report certified to be the last complete set of mechanical tests for each stock size in each shipment.

9.3 When additional tests are specified on the purchase order, a lot, for purposes of selecting test samples, shall consist of all screws offered for inspection at one time of one diameter and length. From each lot, the number of samples for each requirement shall be as follows:

Copyright ASTM International
Provided by IHS under license with ASTM
No reproduction or networking permitted without license from IHS
Not for Resale

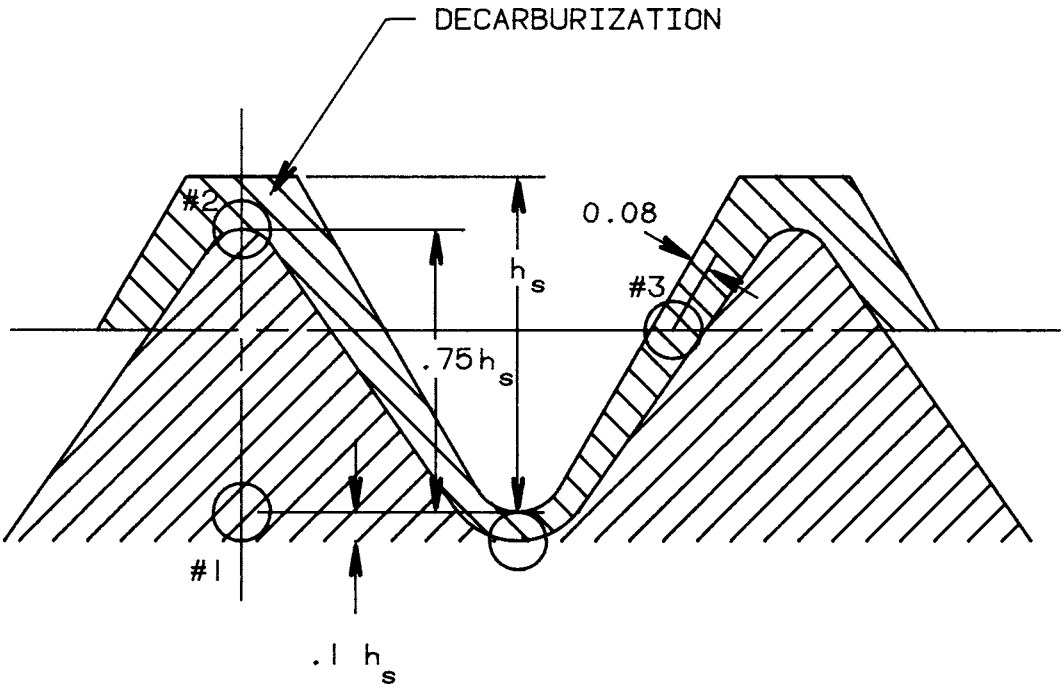

FIG. 1 Decarburization Limits

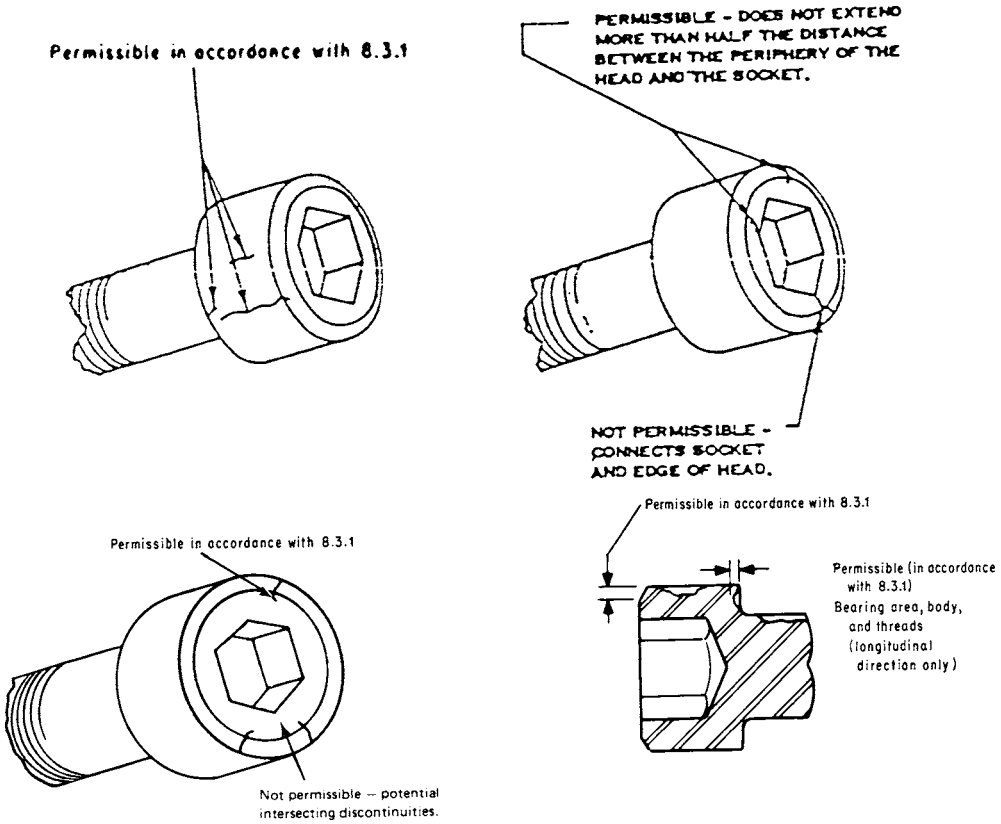

FIG. 2 Head and Body Discontinuity Location and Limits

Number of Pieces in Lot	Number of Samples
800 and less	1
Over 800 to 8 000, incl	2
Over 8 000 to 22 000, incl	3
Over 22 000	5

9.4 Should any sample fail to meet the requirements of a specified test, double the number of samples from the same lot shall be retested for the requirement(s) in which it failed. All of the additional samples shall conform to the specification or the lot shall be rejected.

Copyright ASTM International
Provided by IHS under license with ASTM
No reproduction or networking permitted without license from IHS
Not for Resale

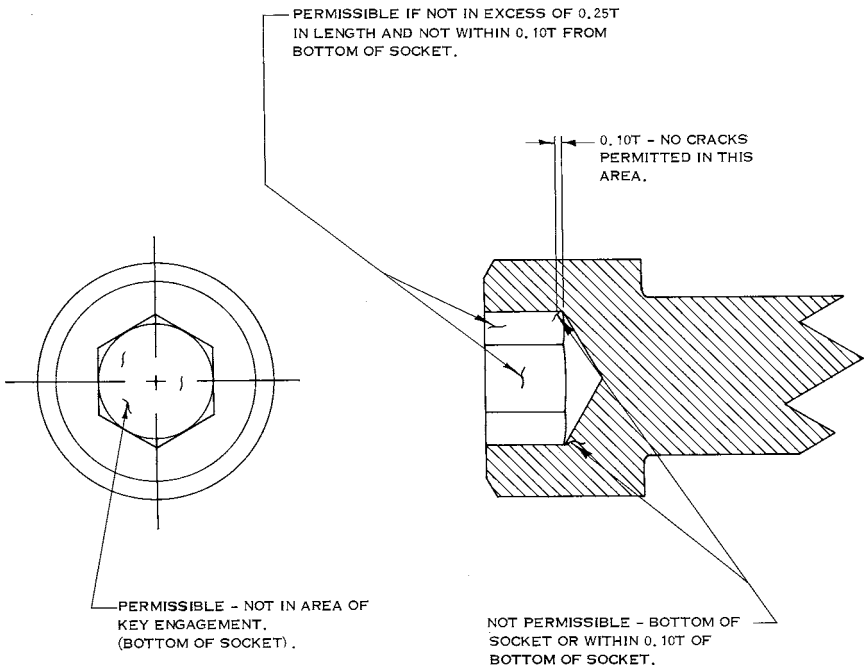

FIG. 3 Socket Discontinuity Location and Limits

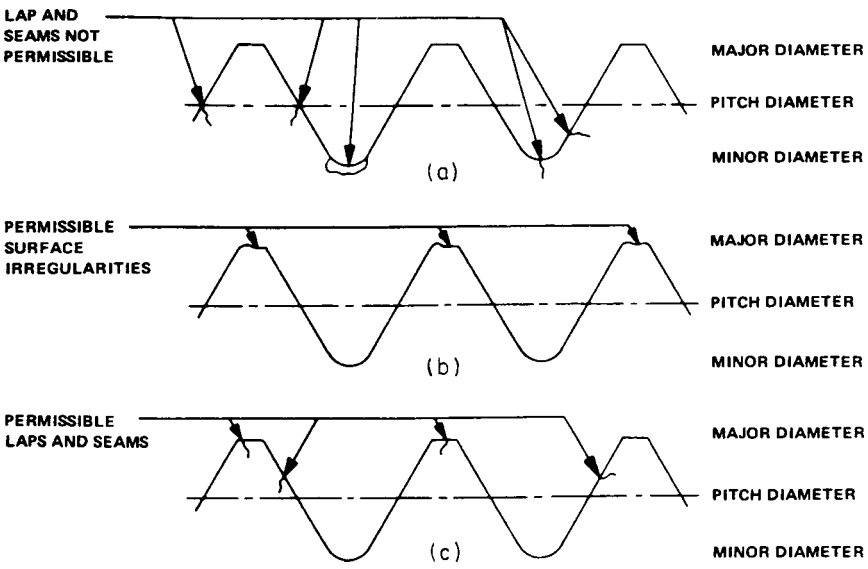

FIG. 4 Thread Discontinuities

10. Test Methods

10.1 Conduct tests for proof load, wedge tensile, and ultimate tensile strength in accordance with Test Methods F 606M.

10.2 Decarburization and carburization tests shall be conducted as follows:

10.2.1 Section the thread area of the bolt longitudinally through the axis, mount, and polish it in accordance with Practice E 3. Take measurements *(1)* at the minor diameter in the center of the thread ridge, and *(2)* 0.75 *h* toward the thread crest on the perpendicular bisector of the thread ridge. Take a measurement *(3)* on the thread flank approximately at the pitch line at a depth of 0.08 mm. Use one of the two methods for carburization/decarburization evaluation either optical or microhardness measurements. The microhardness measurement shall constitute a referee method in case of dispute.

10.2.2 For optical measurement, etch the section in 2 to 4 % nital. Examine the surface of the etched samples under a microscope at 100× using a measuring eyepiece graduated in 0.03-mm increments. The width of any light etching band normally defines the decarburization depth. A dark etching band indicates the possibility of carburization.

10.2.3 Measure microhardness in accordance with Test Method E 384 on unetched specimens using a DPH 136° indenter or a Knoop indenter using the following load application:

Copyright ASTM International
Provided by IHS under license with ASTM
No reproduction or networking permitted without license from IHS
Not for Resale

Thread Pitch, P min.	Load
Over 0.6	500 gf
0.6	200 gf
Less than 0.6	Use optical evaluation in 10.3.2

10.2.3.1 Take measurements at minor diameter (Reading No. 1) on the thread crest bisector to determine base metal hardness. Take measurements (Reading No. 2) on the bisector 0.75 *h* from the minor measurement toward the thread crest. Also take measurements (Reading No. 3) on the thread flank at the pitch line at a depth within 0.08 mm from the surface. Reading No. 3 may be taken on the same or an adjacent thread.

10.2.4 Interpret microhardness readings as follows:

10.2.4.1 A decrease of more than 30 hardness points from Reading No. 1 to Reading No. 2 shall be regarded as decarburization and indicates the screw does not conform to specification requirements.

10.2.4.2 An increase of more that 30 hardness points from Reading No. 1 to Reading No. 3 shall be regarded as carburization and indicates that the screw does not conform to specification requirements.

11. Inspection

11.1 If the additional tests described in 9.3 are required by the purchaser, it shall be specified in the inquiry, order, or contract.

11.2 The inspector representing the purchaser, upon reasonable notice, shall have free entry to all parts of the manufacturer's works that concern the manufacture of the material ordered. The manufacturer shall afford the inspector all reasonable facilities to satisfy him that the material is being furnished in accordance with this specification. All tests and inspection required by the specification that are requested by the purchaser's representative shall be made before shipment, and shall be so conducted as not to interfere unnecessarily with the operation of the works.

12. Product Marking

12.1 All screws with nominal diameters of 5 mm and larger shall be permanently marked to identify the property class, 12.9 and the manufacturer's or private label distributor's identification symbol. Marking for "Socket Head Cap Screws" may be on the side of the head or on top.

12.2 Property class and manufacturer's or private label distributor's identification shall be separate and distinct. Marks shall preferably be in different locations and, when on the same level, shall be separated by a distinctive mark such as a forward or backward slash, colon, dash, dot, or space.

13. Responsibility

13.1 The party responsible for the fastener shall be the organization that supplies the fastener to the purchaser.

14. Packaging and Package Marking

14.1 *Packaging:*

14.1.1 Unless otherwise specified, packaging shall be in accordance with Practice D 3951.

14.1.2 When special packaging requirements are required, they shall be defined at the time of the inquiry and order.

14.2 *Package Marking:*

14.2.1 Each shipping unit shall include or be plainly marked with the following information:

14.2.1.1 ASTM designation,

14.2.1.2 Size,

14.2.1.3 Name brand or trademark of the manufacturer,

14.2.1.4 Number of pieces,

14.2.1.5 Purchase order number, and

14.2.1.6 Country of origin.

15. Keywords

15.1 alloy steel; cap screws; socket head

SUPPLEMENTARY REQUIREMENTS

The following Supplementary Requirement shall apply only when specified by the purchaser in the contract or purchase order. Supplementary requirements shall in no way negate any requirement of the specification itself.

S1. Specific Grade Chemical Compositions

S1.1 When Supplementary Requirement S1 is specified on the order, the chemical composition shall conform to one of the compositions in Table S1.1 at the option of the supplier, unless a specific composition (Grade) has been specified on the purchase order.

TABLE S1.1 Chemical Composition

Grade Designation	4037	4042	4137	4140	4142	4145	4340	8740	5137M	51B37M
UNS Number	G40370	G40420	G41370	G41400	G41420	G41450	G43400	G87400	. . .	. . .
Carbon:										
Heat Analysis	0.35–0.40	0.40–0.45	0.35–0.40	0.38–0.43	0.40–0.45	0.43–0.48	0.38–0.43	0.38–0.43	0.35–0.40	0.33–0.40
Product Analysis	0.33–0.42	0.38–0.47	0.33–0.42	0.36–0.45	0.38–0.47	0.41–0.50	0.36–0.45	0.36–0.45	0.33–0.42	0.31–0.42
Manganese:										
Heat Analysis	0.70–0.90	0.70–0.90	0.70–0.90	0.75–1.00	0.75–1.00	0.75–1.00	0.60–0.80	0.75–1.00	0.30–0.50	0.30–0.50
Product Analysis	0.67–0.93	0.67–0.93	0.67–0.93	0.71–1.04	0.71–1.04	0.71–1.04	0.57–0.83	0.71–1.04	0.27–0.53	0.27–0.53
Phosphorus, max.:										

Copyright ASTM International
Provided by IHS under license with ASTM
No reproduction or networking permitted without license from IHS
Not for Resale

Grade Designation	4037	4042	4137	4140	4142	4145	4340	8740	5137M	51B37M
UNS Number	G40370	G40420	G41370	G41400	G41420	G41450	G43400	G87400	. . .	. . .
Heat Analysis	0.035	0.035	0.035	0.035	0.035	0.035	0.035	0.035	0.035	0.035
Product Analysis	0.040	0.040	0.040	0.040	0.040	0.040	0.040	0.040	0.040	0.040
Sulfur, max.:										
Heat Analysis	0.040	0.040	0.040	0.040	0.040	0.040	0.040	0.040	0.040	0.040
Product Analysis	0.045	0.045	0.045	0.045	0.045	0.045	0.045	0.045	0.045	0.045
Silicon:										
Heat Analysis	0.15–0.35	0.15–0.35	0.15–0.35	0.15–0.35	0.15–0.35	0.15–0.35	0.15–0.35	0.15–0.35	0.15–0.35	0.15–0.35
Product Analysis	0.13–0.37	0.13–0.37	0.13–0.37	0.13–0.37	0.13–0.37	0.13–0.37	0.13–0.37	0.13–0.37	0.13–0.37	0.13–0.37
Nickel:										
Heat Analysis	[A]	[A]	[A]	[A]	[A]	[A]	1.65–2.00	0.40–0.70	[A]	[A]
Product Analysis	. . .	. . .	. . .	. . .	. . .	. . .	1.65–2.05	0.37–0.73	. . .	. . .
Chromium:										
Heat Analysis	[A]	[A]	0.80–1.10	0.80–1.10	0.80–1.10	0.80–1.10	0.70–0.90	0.40–0.60	0.90–1.20	0.95–1.25
Product Analysis	. . .	. . .	0.75–1.15	0.75–1.15	0.75–1.15	0.75–1.15	0.67–0.93	0.37–0.63	0.85–1.25	0.90–1.30
Molybdenum:										
Heat Analysis	0.20–0.30	0.20–0.30	0.15–0.25	0.15–0.25	0.15–0.25	0.15–0.25	0.20–0.30	0.20–0.30	[A]	[A]
Product Analysis	0.18–0.32	0.18–0.32	0.13–0.27	0.13–0.27	0.13–0.27	0.13–0.27	0.18–0.32	0.18–0.32	. . .	. . .
Boron:										
Heat Analysis	[A]	[A]	[A]	[A]	[A]	[A]	[A]	[A]	[A]	0.0005–0.003
Product Analysis	. . .	. . .	. . .	. . .	. . .	. . .	. . .	. . .	. . .	[B]

[A] Elements shown with an "A" are not applicable to that grade designation.
[B] Boron is not subject to product analysis.

SUMMARY OF CHANGES

Committee F16 has identified the location of selected changes to this standard since the last issue, A 574M-00, that may impact the use of this standard. (Approved Aug. 1, 2004.)

(*1*) Revised Section 13, Responsibility.

ASTM International takes no position respecting the validity of any patent rights asserted in connection with any item mentioned in this standard. Users of this standard are expressly advised that determination of the validity of any such patent rights, and the risk of infringement of such rights, are entirely their own responsibility.

This standard is subject to revision at any time by the responsible technical committee and must be reviewed every five years and if not revised, either reapproved or withdrawn. Your comments are invited either for revision of this standard or for additional standards and should be addressed to ASTM International Headquarters. Your comments will receive careful consideration at a meeting of the responsible technical committee, which you may attend. If you feel that your comments have not received a fair hearing you should make your views known to the ASTM Committee on Standards, at the address shown below.

This standard is copyrighted by ASTM International, 100 Barr Harbor Drive, PO Box C700, West Conshohocken, PA 19428-2959, United States. Individual reprints (single or multiple copies) of this standard may be obtained by contacting ASTM at the above address or at 610-832-9585 (phone), 610-832-9555 (fax), or service@astm.org (e-mail); or through the ASTM website (www.astm.org).

Copyright ASTM International
Provided by IHS under license with ASTM
No reproduction or networking permitted without license from IHS
Not for Resale