Designation: A 574 – 04$^{\epsilon 1}$

Standard Specification for Alloy Steel Socket-Head Cap Screws[1]

This standard is issued under the fixed designation A 574; the number immediately following the designation indicates the year of original adoption or, in the case of revision, the year of last revision. A number in parentheses indicates the year of last reapproval. A superscript epsilon (ε) indicates an editorial change since the last revision or reapproval.

This standard has been approved for use by agencies of the Department of Defense.

ε[1] NOTE—Sections 2.2 and 4.2.8 were editorially revised in October 2006.

1. Scope*

1.1 This specification[2] covers the requirements for quenched and tempered alloy steel hexagon socket-head cap screws, 0.060 through 4 in. in diameter where high strength is required.

NOTE 1—A complete metric companion to Specification A 574 has been developed—A 574M; therefore no metric equivalents are presented in this specification.

1.2 The following hazard caveat pertains only to the test method portion, Section 12, of this specification. *This standard does not purport to address all of the safety concerns, if any, associated with its use. It is the responsibility of the user of this standard to establish appropriate safety and health practices and determine the applicability of regulatory limitations prior to use.*

2. Referenced Documents

2.1 *ASTM Standards:* [3]

A 751 Test Methods, Practices, and Terminology for Chemical Analysis of Steel Products

D 3951 Practice for Commercial Packaging

E 3 Guide for Preparation of Metallographic Specimens

E 112 Test Methods for Determining Average Grain Size

E 384 Test Method for Microindentation Hardness of Materials

F 606 Test Methods for Determining the Mechanical Properties of Externally and Internally Threaded Fasteners, Washers, Direct Tension Indicators, and Rivets

F 788/F 788M Specification for Surface Discontinuities of Bolts, Screws, and Studs, Inch and Metric Series

2.2 *ASME Standards:*[4]

B1.1 Unified Screw Threads

B18.3 Socket Cap, Shoulder, and Set Screws

B18.24 Part Identifying Number (PIN) Code System Standard for B18 Fastener Products

2.3 *Federal Standard:*

H-28 Handbook of Thread Dimensions[5]

3. Terminology

3.1 *Definitions:*

3.1.1 Definitions of discontinuities covered by 10.2 follow:

3.1.2 *crack*—clean crystalline break passing through the grain or grain boundary without inclusion of foreign elements.

3.1.3 *inclusions*—particles of nonmetallic impurities, usually oxides, sulfides, silicates, and such, which are mechanically held in the steel during solidification.

3.1.4 *nicks or pits*—depressions or indentations in the surface of the metal.

3.1.5 *seam or lap*—noncrystalline break through the metal which is inherently in the raw material.

4. Ordering Information

4.1 Orders for socket head cap screws under this specification shall include the following:

4.1.1 ASTM designation and year of issue.

4.1.2 Quantities (number of pieces by size).

4.1.3 Size and length.

4.2 Orders for socket head cap screws may include the following optional requirements:

4.2.1 Inspection at point of manufacture.

4.2.2 Coating, if a protective finish other than black oxide (thermal or chemical) is required, it must be specified.

4.2.3 Certified test reports (see 11.2).

4.2.4 Additional testing (see 11.3).

4.2.5 Special packaging (see 16.1.2).

4.2.6 Supplementary requirements (see S1).

[1] This specification is under the jurisdiction of ASTM Committee F16 on Fasteners and is the direct responsibility of Subcommittee F16.02 on Steel Bolts, Nuts, Rivets, and Washers.

Current edition approved Aug. 1, 2004. Published August 2004. Originally approved in 1967. Last previous edition approved in 2000 as A 574 – 00.

[2] For *ASME Boiler and Pressure Vessel Code* applications see related Specification SA-574 in Section II of that code.

[3] For referenced ASTM standards, visit the ASTM website, www.astm.org, or contact ASTM Customer Service at service@astm.org. For *Annual Book of ASTM Standards* volume information, refer to the standard's Document Summary page on the ASTM website.

[4] Available from American Society of Mechanical Engineers (ASME), ASME International Headquarters, Three Park Ave., New York, NY 10016-5990.

[5] Available from General Services Administration, Specification and Consumer Information Distribution Branch, Bldg. 197, Washington Navy Yard, Washington, DC 20407.

***A Summary of Changes section appears at the end of this standard.**

Copyright © ASTM International, 100 Barr Harbor Drive, PO Box C700, West Conshohocken, PA 19428-2959, United States.

Copyright ASTM International
Provided by IHS under license with ASTM
No reproduction or networking permitted without license from IHS
Not for Resale

4.2.7 Special requirements.

4.2.8 For establishment of a part identifying system, see ASME B18.24

5. Materials and Manufacture

5.1 The screws shall be fabricated from a steel which has been made by the open-hearth, basic-oxygen, or electric-furnace process.

5.2 The screws shall be fabricated from alloy steel made to a fine grain practice. In the event of controversy over grain size, referee tests on finished screws conducted in accordance with Test Methods E 112 shall prevail.

5.3 Unless otherwise specified, the heads of screws through 1.500-in. diameter shall be fabricated by hot or cold forging. Over 1.500-in. diameter, the heads may be fabricated by hot or cold forging or by machining. Sockets may be forged or machined.

5.4 Unless otherwise specified, threads of screws shall be rolled for diameters through 0.625 in. and for screw lengths through 4 in. For diameters and lengths other than this, threads may be rolled, cut, or ground.

5.5 The screws shall be heat treated by oil quenching from above the transformation temperature and then tempering at a temperature not lower than 650°F.

5.6 *Standard Finishes*—Unless otherwise specified, the screws shall be furnished with one of the following "standard surfaces as manufactured" at the option of the manufacturer: *(1)* bright uncoated, *(2)* thermal black oxide, or *(3)* chemical black oxide. Hydrogen embrittlement tests shall not be required for screws furnished in these conditions.

5.7 *Protective Coatings*:

5.7.1 When a protective finish other than as specified in 5.6 is required, it shall be specified on the purchase order with the applicable finish specification.

5.7.2 When protective or decorative coatings are applied to the screws, precautions specified by the coating requirements to minimize embrittlement shall be exercised.

6. Chemical Composition

6.1 The screws shall be alloy steel conforming to the chemical composition specified in Table 1. See Supplementary Requirement S1 when specific chemistry grades are required.

6.2 One or more of the following alloying elements: chromium, nickel, molybdenum, or vanadium shall be present in sufficient quantity to ensure that the specified strength properties are met after oil quenching and tempering. As a guide for selecting material, an alloy steel should be capable of meeting the specified mechanical requirements if the "as oil quenched" core hardness one diameter from the point is equal to or exceeds 25 HRC + (55 × carbon content).

TABLE 1 Chemical Requirements

Element	Composition, %	
	Heat Analysis	Product Analysis
Carbon, min	0.33	0.31
Phosphorus, max	0.035	0.040
Sulfur, max	0.040	0.045
Alloying elements	See 6.2	

6.3 Product analyses may be made by the purchaser from finished screws representing each lot. The chemical composition, thus determined, shall conform to the requirements prescribed for product analysis in Table 1.

6.4 Application of heats of steel to which bismuth, selenium, tellurium, or lead has been intentionally added shall not be permitted.

6.5 Chemical analyses shall be performed in accordance with Test Methods, Practices, and Terminology A 751.

7. Mechanical Properties

7.1 The hardness of finished screws shall be 39 to 45 HRC for 0.500 in. and smaller and 37 to 45 HRC for 0.625 in. and larger. This shall be only the mechanical requirements for screws that are shorter than three times the diameter or that have insufficient threads for tension testing.

7.2 Screws, other than those exempted in 7.1 and 7.3, shall meet the proof load and tensile requirements in Table 2 and Table 3. The screws shall be tension tested with a wedge of the angle specified in Table 4 under the head. To meet the requirements of the wedge test, there must be a tensile failure in the body or thread section. For the purpose of this test, failure means separation into two pieces. Screws threaded to the head shall pass the requirements for this test if the fracture that caused failure originated in the thread area, even though it may have propagated into the fillet area or the head before separation.

7.3 Screws having a diameter larger than 1.500 in. shall be preferably tested in full size and shall meet the requirements of Table 2 and Table 3. When equipment of sufficient capacity is not readily available, screws shall meet 170 ksi, min, tensile strength, 153 ksi, min, yield strength at 0.2 % offset, and 10 % elongation on specimens machined in accordance with Test Methods F 606.

8. Metallurgical Requirement

8.1 *Carburization or Decarburization*:

8.1.1 There shall be no evidence of carburization or total decarburization on the surfaces of the heat-treated screws when measured in accordance with 12.3.

8.1.2 The depth of partial decarburization shall be limited to the values in Table 5 when measured as shown in Fig. 1 and in accordance with 12.3.

9. Dimensions

9.1 Unless otherwise specified, the product shall conform to the requirements of B18.3.

9.2 Unless otherwise specified, threads shall be Unified standard: Class 3A, UNRC and UNRF series for screw sizes 0.060 through 1 in. inclusive; Class 2A, UNRC and UNRF series for sizes over 1 in. to 1.500 in. inclusive; and Class 2A UNRC series for sizes larger than 1.500 in. in accordance with B1.1.

Copyright ASTM International
Provided by IHS under license with ASTM
No reproduction or networking permitted without license from IHS
Not for Resale

TABLE 2 Tensile Requirements for Coarse Thread Screws

Screw Dia (*D*), in.	Threads/ in.	Tensile Load, min, lbf [A]	Stress Area, in.^{2} [B]	Proof Load (Length Measure-ment Method), min, lbf [C]
0.073	64	473	0.00263	368
0.086	56	666	0.00370	518
0.099	48	877	0.00487	682
0.112	40	1 090	0.00604	846
0.125	40	1 430	0.00796	1 110
0.138	32	1 640	0.00909	1 270
0.164	32	2 520	0.0140	1 960
0.190	24	3 150	0.0175	2 450
0.250	20	5 730	0.0318	4 450
0.3125	18	9 440	0.0524	7 340
0.375	16	13 900	0.0775	10 800
0.4375	14	19 100	0.1063	14 900
0.500	13	25 500	0.1419	19 900
0.625	11	38 400	0.226	30 500
0.750	10	56 800	0.334	45 100
0.875	9	78 500	0.462	62 400
1.000	8	103 000	0.606	81 800
1.125	7	129 000	0.763	103 000
1.250	7	165 000	0.969	131 000
1.375	6	196 000	1.155	156 000
1.500	6	239 000	1.405	190 000
1.750	5	323 000	1.90	256 000
2.000	4½	425 000	2.50	338 000
2.250	4½	552 000	3.25	439 000
2.500	4	680 000	4.00	540 000
2.750	4	838 000	4.93	666 000
3.000	4	1 010 000	5.97	806 000
3.250	4	1 210 000	7.10	958 000
3.500	4	1 420 000	8.33	1 120 000
3.750	4	1 640 000	9.66	1 300 000
4.000	4	1 880 000	11.08	1 500 000

[A] Values based on 180 ksi for 0.500 and smaller and 170 ksi for sizes larger than 0.500 in. and stress area in accordance with Footnote *B*.

[B] Stress areas based on Handbook H-28 (U.S. Department of Commerce) as follows:

$$A_s = 0.7854\,[D - (0.9743/n)]^2$$

where:

A_s = stress area,
D = nominal screw size, and
n = threads/in.

[C] Values based on 140 ksi for 0.500 and smaller and 135 ksi for sizes larger than 0.500 in. and stress area in accordance with Footnote *B*.

TABLE 3 Tensile Requirements for Fine Thread Screws

Screw Dia (*D*), in.	Threads/ in.	Tensile Load, min, lbf [A]	Stress Area, in.^{2} [B]	Proof Load (Length Measure-ment Method) min, lbf [C]
0.060	80	324	0.00180	252
0.073	72	500	0.00278	389
0.086	64	709	0.00394	552
0.099	56	941	0.00523	732
0.112	48	1 190	0.00661	925
0.125	44	1 490	0.00830	1 160
0.138	40	1 830	0.01015	1 420
0.164	36	2 650	0.01474	2 060
0.190	32	3 600	0.0200	2 800
0.250	28	6 500	0.0364	5 100
0.3125	24	10 400	0.0580	8 120
0.375	24	15 800	0.0878	12 300
0.4375	20	21 400	0.1187	16 600
0.500	20	28 800	0.1599	22 400
0.625	18	43 500	0.256	34 600
0.750	16	63 400	0.373	50 400
0.875	14	86 500	0.509	68 700
1.000	12	113 000	0.663	89 500
1.125	12	146 000	0.856	116 000
1.250	12	182 000	1.073	145 000
1.375	12	224 000	1.315	178 000
1.500	12	269 000	1.581	213 000

[A] Values based on 180 ksi for 0.500 and smaller and 170 ksi for sizes larger than 0.500 in. and stress area in accordance with Footnote *B*.

[B] Stress areas based on H-28 as follows:

$$A_s = 0.7854\,[D - (0.9743/n)]^2$$

where:

A_s = stress area,
D = nominal screw size, and
n = threads/in.

[C] Values based on 140 ksi for 0.500 and smaller and 135 ksi for sizes larger than 0.500 in. and stress area in accordance with Footnote *B*.

TABLE 4 Wedge Test Angles

Screw Size, *D*, in.	Wedge Angle, Deg	
	Body Lengths 2*D* or Less or Threaded to the Head	Body Lengths Greater than 2*D*
0.112 – 0.500, incl	6	10
0.625 – 0.750, incl	6	8
0.875 to 1.500, incl	4	6

10. Workmanship, Finish, and Appearance

10.1 *Discontinuities*—The surface discontinuities for these products shall conform to Specification F 788/F 788M and the additional limitations specified herein.

10.2 *Socket Discontinuities*:

10.2.1 Depth of discontinuities in the socket area will be permissible within the limits of Condition 1 provided they do not affect the usability and performance of the screw. Discontinuities exceeding these limits are not acceptable.

10.2.2 Longitudinal discontinuities must not exceed 0.25*T* in length. Permissible and nonpermissible discontinuities are shown in Fig. 2.

NOTE 2—*T* = actual key engagement.

10.3 *Permissible Head and Body Discontinuities*—Discontinuities as defined above are permitted in the locations illustrated in Fig. 3 to the depths shown in 10.4. These discontinuities are permitted, provided they do not affect the usability and performance of the screw. All discontinuities are to be measured perpendicular to indicated surfaces.

10.4 *Conditions for Permissible Discontinuity Depths*:

10.4.1 *Condition 1*—For bearing area, fillet, and other surfaces, max depth = 0.03*D* or 0.005 in. (whichever is greater).

NOTE 3—*D* = nominal diameter of screw.

10.4.2 *Condition 2*—For peripheral discontinuities, max depth = 0.06*D*, but not to exceed 0.064.

10.5 *Thread Discontinuities*—Threads shall have no laps at the root or on the flanks located below the pitch line. Laps are

Copyright ASTM International
Provided by IHS under license with ASTM
No reproduction or networking permitted without license from IHS
Not for Resale

TABLE 5 Decarburization Limits

Threads/in.	Thread Height, h_s	0.75 h_s from Root to Crest, min	0.1 h_s at Root, max
48	0.013	0.010	0.001
44	0.014	0.011	0.001
40	0.015	0.011	0.002
36	0.017	0.013	0.002
32	0.019	0.014	0.002
28	0.022	0.017	0.002
24	0.026	0.020	0.003
20	0.031	0.023	0.003
18	0.034	0.026	0.003
16	0.038	0.029	0.004
14	0.044	0.033	0.004
13	0.047	0.035	0.005
12	0.051	0.038	0.005
11	0.056	0.042	0.006
10	0.061	0.046	0.006
9	0.068	0.051	0.007
8	0.077	0.058	0.008
7	0.088	0.066	0.009
6	0.102	0.077	0.010
5	0.123	0.092	0.012
4.5	0.136	0.102	0.014
4	0.153	0.115	0.015

permissible at the thread crest to a depth of 25 % of the basic thread height and on the thread flanks beyond the pitch diameter. Longitudinal seams in the threads are acceptable within the limits of Condition 1 (10.4.1).

11. Number of Tests and Retests

11.1 The requirements of this specification shall be met in continuous mass production for stock, and the manufacturer shall make sample inspections to ensure that the product conforms to the specified requirements. Additional tests of individual shipments of material are not ordinarily contemplated. A record of individual heats of steel in each test lot shall be maintained. The container shall be coded to permit identification of the lot.

11.2 When specified in the order, the manufacturer shall furnish a test report certified to be the last complete set of mechanical tests for each stock size in each shipment.

11.3 When additional tests are specified on the purchase order, a lot, for purposes of selecting test samples, shall consist of all screws offered for inspection at one time of one diameter and length. From each lot, the number of samples for each requirement shall be as follows:

Number of Pieces in Lot	Number of Samples
800 and less	1
Over 800 to 8 000, incl	2
Over 8 000 to 22 000, incl	3
Over 22 000	5

11.4 Should any sample fail to meet the requirements of a specified test, double the number of samples from the same lot shall be retested for the requirement(s) in which it failed. All of the additional samples shall conform to the specification or the lot shall be rejected.

12. Test Methods

12.1 Test the finished screws and specimens, as applicable, for mechanical properties and hardness requirements of Section 7. Testing shall be in accordance with Test Methods F 606 at room temperature. The minimum required length for tension testing shall be 3*D*. The angle used in wedge tests shall be as specified in Table 4.

12.2 The speed of testing, as determined with a free running crosshead, shall be a maximum of 1 in./min for the tension tests of screws.

12.3 Decarburization and carburization tests shall be conducted as follows:

12.3.1 Section the thread area of the bolt longitudinally through the axis, mount, and polish it in accordance with Practice E 3. Take measurements *(1)* at the minor diameter in the center of the thread ridge, and *(2)* 0.75 *h* toward the thread crest on the perpendicular bisector of the thread ridge. Take a measurement *(3)* on the thread flank approximately at the pitch line at a depth of 0.003 in. Use one of the two methods for carburization/decarburization evaluation either optical or microhardness measurements. The microhardness measurement shall constitute a referee method in case of dispute.

12.3.2 For optical measurement, etch the section in 2 to 4 % nital. Examine the surface of the etched samples under a microscope at 100× using a measuring eyepiece graduated in 0.001-in. increments. The width of any light etching band normally defines the decarburization depth. A dark etching band indicates the possibility of carburization.

12.3.3 Measure microhardness in accordance with Test Method E 384 on unetched specimens using a DPH 136° indenter or a Knoop indenter using the following load application:

Number of Threads per Inch	Load
Less than 40	500 gf
40, 44, and 48	200 gf
Over 48	Use optical evaluation in 12.3.2

12.3.3.1 Take measurements at minor diameter (Reading No. 1) on the thread crest bisector to determine base metal hardness. Take measurements (Reading No. 2) on the bisector 0.75 *h* from the minor measurement toward the thread crest. Also take measurements (Reading No. 3) on the thread flank at the pitch line at a depth within 0.003 from the surface. Reading No. 3 may be taken on the same or an adjacent thread.

12.3.4 Interpret microhardness readings as follows:

12.3.4.1 A decrease of more than 30 hardness points from Reading No. 1 to Reading No. 2 shall be regarded as decarburization and indicates the screw does not conform to specification requirements.

12.3.4.2 An increase of more than 30 hardness points from Reading No. 1 to Reading No. 3 shall be regarded as carburization and indicates that the screw does not conform to specification requirements.

13. Inspection

13.1 If the additional tests described in 11.3 are required by the purchaser it shall be specified in the inquiry, order, or contract.

Copyright ASTM International
Provided by IHS under license with ASTM
No reproduction or networking permitted without license from IHS
Not for Resale

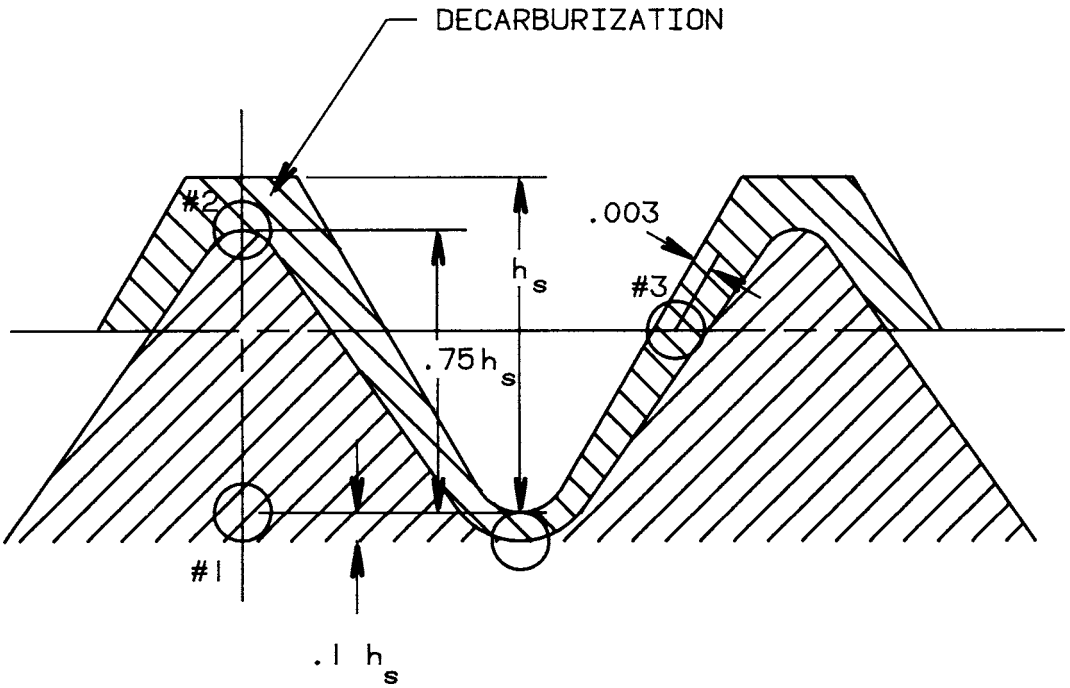

FIG. 1 Definition of Partial Decarburization Limits

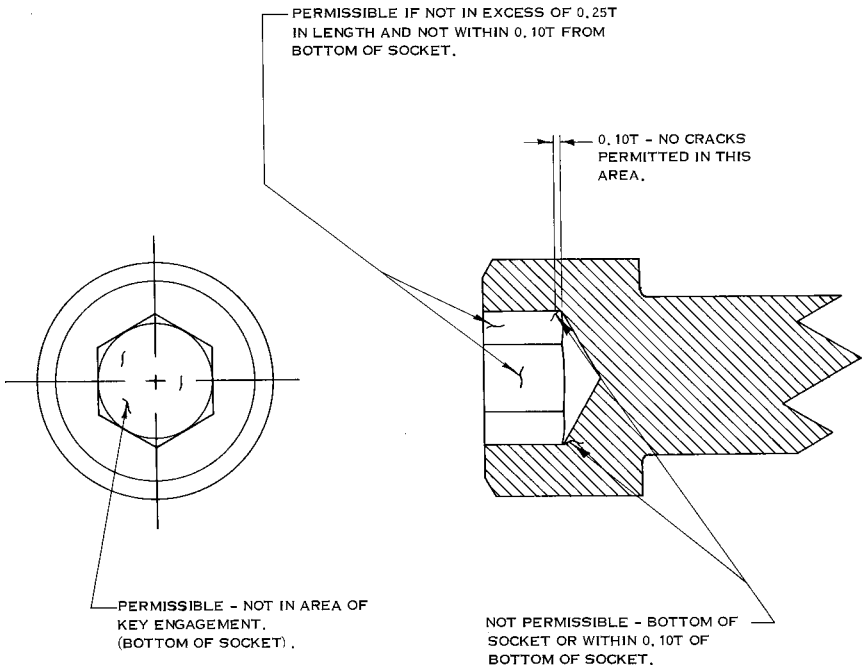

FIG. 2 Socket Discontinuity Location and Limits

13.2 The inspector representing the purchaser shall have free entry to all parts of the manufacturer's works that concern the manufacture of the material ordered. The manufacturer shall afford the inspector all reasonable facilities to satisfy him that the material is being furnished in accordance with this specification. All tests and inspections required by the specification that are requested by the purchaser's representative shall be made before shipment, and shall be conducted as not to interfere unnecessarily with the operation of the works.

14. Responsibility

14.1 The party responsible for the fastener shall be the organization that supplies the fastener to the purchaser.

15. Rejection and Rehearing

15.1 Rejections based on requirements herein shall be reported to the manufacturer within 30 days after receipt of material by the purchaser.

Copyright ASTM International
Provided by IHS under license with ASTM
No reproduction or networking permitted without license from IHS
Not for Resale

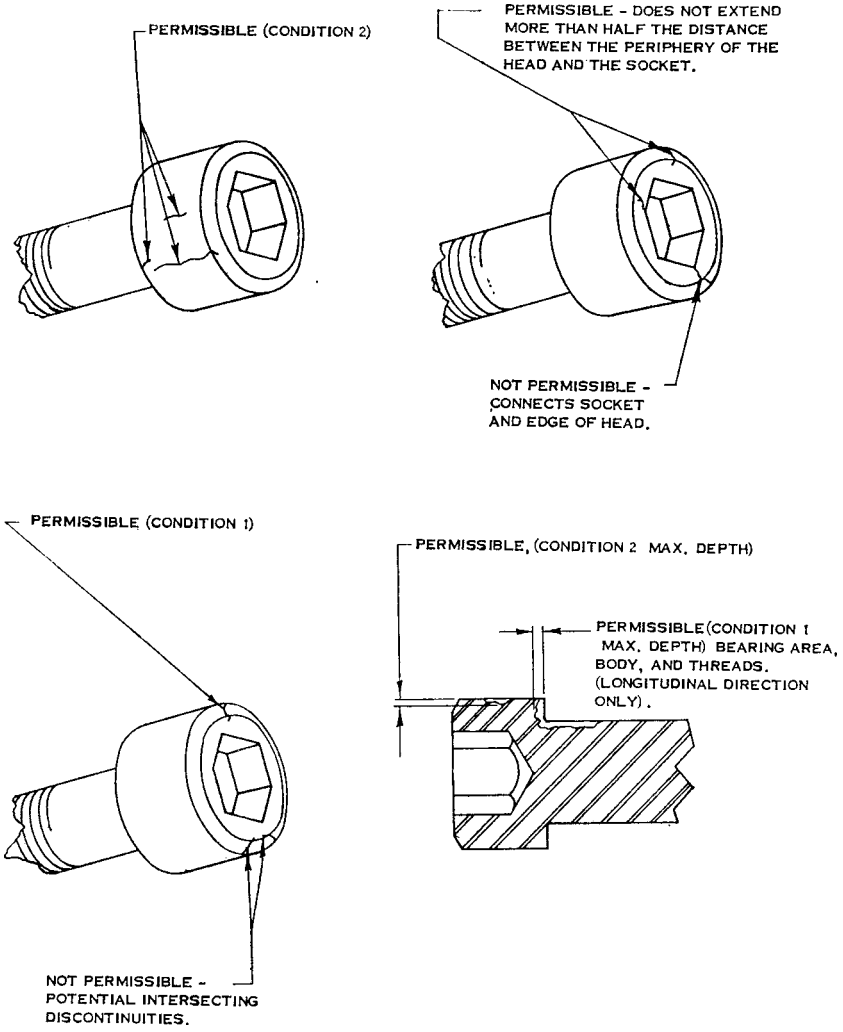

FIG. 3 Head and Body Discontinuity Location and Limits

16. Packaging and Package Marking

16.1 *Packaging*:

16.1.1 Unless otherwise specified, packaging shall be in accordance with Practice D 3951.

16.1.2 When special packaging requirements are required, they shall be defined at the time of the inquiry and order.

16.2 *Package Marking*:

16.2.1 Each shipping unit shall include or be plainly marked with the following information:

16.2.1.1 ASTM designation,
16.2.1.2 Size,
16.2.1.3 Name and brand or trademark of the manufacturer,
16.2.1.4 Number of pieces,
16.2.1.5 Purchase order number, and
16.2.1.6 Country of origin.

17. Keywords

17.1 alloy steel; cap screws; socket head

Copyright ASTM International
Provided by IHS under license with ASTM
No reproduction or networking permitted without license from IHS
Not for Resale

SUPPLEMENTARY REQUIREMENTS

The following Supplementary Requirement shall apply only when specified by the purchaser in the contract or purchase order. Supplementary requirements shall in no way negate any requirement of the specification itself.

S1. Specific Grade Chemical Compositions

S1.1 When Supplementary Requirement S1 is specified on the order, the chemical composition shall conform to one of the compositions in Table S1.1 at the option of the supplier, unless a specific composition (Grade) has been specified on the purchase order.

TABLE S1.1 Chemical Composition

Grade Designation	4037	4042	4137	4140	4142	4145	4340	8740	5137M	51B37M
UNS Number	G40370	G40420	G41370	G41400	G41420	G41450	G43400	G87400	. . .	. . .
Carbon:										
Heat Analysis	0.35–0.40	0.40–0.45	0.35–0.40	0.38–0.43	0.40–0.45	0.43–0.48	0.38–0.43	0.38–0.43	0.35–0.40	0.33–0.40
Product Analysis	0.33–0.42	0.38–0.47	0.33–0.42	0.36–0.45	0.38–0.47	0.41–0.50	0.36–0.45	0.36–0.45	0.33–0.42	0.31–0.42
Manganese:										
Heat Analysis	0.70–0.90	0.70–0.90	0.70–0.90	0.75–1.00	0.75–1.00	0.75–1.00	0.60–0.80	0.75–1.00	0.30–0.50	0.30–0.50
Product Analysis	0.67–0.93	0.67–0.93	0.67–0.93	0.71–1.04	0.71–1.04	0.71–1.04	0.57–0.83	0.71–1.04	0.27–0.53	0.27–0.53
Phosphorus, max.:										
Heat Analysis	0.035	0.035	0.035	0.035	0.035	0.035	0.035	0.035	0.035	0.035
Product Analysis	0.040	0.040	0.040	0.040	0.040	0.040	0.040	0.040	0.040	0.040
Sulfur, max.:										
Heat Analysis	0.040	0.040	0.040	0.040	0.040	0.040	0.040	0.040	0.040	0.040
Product Analysis	0.045	0.045	0.045	0.045	0.045	0.045	0.045	0.045	0.045	0.045
Silicon:										
Heat Analysis	0.15–0.35	0.15–0.35	0.15–0.35	0.15–0.35	0.15–0.35	0.15–0.35	0.15–0.35	0.15–0.35	0.15–0.35	0.15–0.35
Product Analysis	0.13–0.37	0.13–0.37	0.13–0.37	0.13–0.37	0.13–0.37	0.13–0.37	0.13–0.37	0.13–0.37	0.13–0.37	0.13–0.37
Nickel:										
Heat Analysis	[A]	[A]	[A]	[A]	[A]	[A]	1.65–2.00	0.40–0.70	[A]	[A]
Product Analysis	. . .	. . .	. . .	. . .	. . .	. . .	1.65–2.05	0.37–0.73	. . .	. . .
Chromium:										
Heat Analysis	[A]	[A]	0.80–1.10	0.80–1.10	0.80–1.10	0.80–1.10	0.70–0.90	0.40–0.60	0.90–1.20	0.95–1.25
Product Analysis	. . .	. . .	0.75–1.15	0.75–1.15	0.75–1.15	0.75–1.15	0.67–0.93	0.37–0.63	0.85–1.25	0.90–1.30
Molybdenum:										
Heat Analysis	0.20–0.30	0.20–0.30	0.15–0.25	0.15–0.25	0.15–0.25	0.15–0.25	0.20–0.30	0.20–0.30	[A]	[A]
Product Analysis	0.18–0.32	0.18–0.32	0.13–0.27	0.13–0.27	0.13–0.27	0.13–0.27	0.18–0.32	0.18–0.32	. . .	. . .
Boron:										
Heat Analysis	[A]	[A]	[A]	[A]	[A]	[A]	[A]	[A]	[A]	0.0005–0.003
Product Analysis	. . .	. . .	. . .	. . .	. . .	. . .	. . .	. . .	. . .	[B]

[A] Elements shown with an "A" are not applicable to that grade designation.
[B] Boron is not subject to product analysis.

Copyright ASTM International
Provided by IHS under license with ASTM
No reproduction or networking permitted without license from IHS
Not for Resale

SUMMARY OF CHANGES

Committee F16 has identified the location of selected changes to this standard since the last issue, A 574 – 00, that may impact the use of this standard. (Approved Aug. 1, 2004.)

(1) Revised Section 14, Responsibility.

ASTM International takes no position respecting the validity of any patent rights asserted in connection with any item mentioned in this standard. Users of this standard are expressly advised that determination of the validity of any such patent rights, and the risk of infringement of such rights, are entirely their own responsibility.

This standard is subject to revision at any time by the responsible technical committee and must be reviewed every five years and if not revised, either reapproved or withdrawn. Your comments are invited either for revision of this standard or for additional standards and should be addressed to ASTM International Headquarters. Your comments will receive careful consideration at a meeting of the responsible technical committee, which you may attend. If you feel that your comments have not received a fair hearing you should make your views known to the ASTM Committee on Standards, at the address shown below.

This standard is copyrighted by ASTM International, 100 Barr Harbor Drive, PO Box C700, West Conshohocken, PA 19428-2959, United States. Individual reprints (single or multiple copies) of this standard may be obtained by contacting ASTM at the above address or at 610-832-9585 (phone), 610-832-9555 (fax), or service@astm.org (e-mail); or through the ASTM website (www.astm.org).

Copyright ASTM International
Provided by IHS under license with ASTM
No reproduction or networking permitted without license from IHS
Not for Resale