Designation: A 571/A 571M – 01 (Reapproved 2006)

Standard Specification for Austenitic Ductile Iron Castings for Pressure-Containing Parts Suitable for Low-Temperature Service[1]

This standard is issued under the fixed designation A 571/A 571M; the number immediately following the designation indicates the year of original adoption or, in the case of revision, the year of last revision. A number in parentheses indicates the year of last reapproval. A superscript epsilon (ε) indicates an editorial change since the last revision or reapproval.

1. Scope

1.1 This specification[2] covers austenitic ductile iron, Type D-2M, Classes 1 and 2, for compressors, expanders, pumps, valves, and other pressure-containing parts intended primarily for low-temperature service.

1.2 These grades of austenitic ductile iron are characterized by having their graphite substantially in a spheroidal form and free of flake graphite. They are essentially free of carbides and contain sufficient alloy content to produce a stable austenitic matrix down to −423°F [−252°C] (liquid hydrogen).

1.3 The values stated in either inch-pound or SI units are to be regarded separately as standard. Within the text, the SI units are shown in brackets. The values stated in each system are not exact equivalents; therefore, each system shall be used independently of the other. Combining values from the two systems may result in nonconformance with the specification.

1.4 The following precautionary caveat pertains only to the test methods portion, Section 11, of this specification: *This standard does not purport to address all of the safety concerns, if any, associated with its use. It is the responsibility of the user of this standard to establish appropriate safety and health practices and determine the applicability of regulatory limitations prior to use.*

2. Referenced Documents

2.1 *ASTM Standards:* [3]

A 941 Terminology Relating to Steel, Stainless Steel, Related Alloys, and Ferroalloys

E 8 Test Methods for Tension Testing of Metallic Materials

E 23 Test Methods for Notched Bar Impact Testing of Metallic Materials

E 30 Test Methods for Chemical Analysis of Steel, Cast Iron, Open-Hearth Iron, and Wrought Iron

E 59 Practice for Sampling Steel and Iron for Determination of Chemical Composition[4]

3. Ordering Information

3.1 Orders for material under this specification shall include the following information:

3.1.1 Quantity (weight or number of pieces),

3.1.2 ASTM designation and year of issue,

3.1.3 Material class (Table 1),

3.1.4 Impact test temperature requirement (Section 11),

3.1.5 Place of inspection (Section 13), and

3.1.6 Certification requirements (Section 14).

4. Materials and Manufacture

4.1 *Material*—The iron shall be made in the electric-arc furnace, induction furnace, cupola, or any other furnace which is capable of producing castings meeting the chemical compositions and mechanical properties in this specification.

4.2 *Heat Treatment*:

4.2.1 All castings shall be heat treated.

4.2.2 Heat treatment shall be performed before machining except in instances when reheat treating is necessary.

4.2.3 Heat treatment shall consist of annealing. The procedure for this type treatment shall consist of heating the casting to a minimum of 1600°F [870°C] but not greater than 1800°F [980°C] holding at that temperature not less than 1 h/in. [1 h/25 mm] of section and furnace cooling. (See Terminology A 941.)

5. Chemical Requirements

5.1 Drillings taken from test coupons, broken test specimens or castings shall conform to the requirements as to chemical composition prescribed in Table 2.

5.2 The chemical analysis for total carbon shall be made on either chilled cast pencil-type specimens or thin wafers approximately 1/32-in. [0.8-mm] thick cut from test coupons. Drillings shall not be used because of attendant loss of graphite.

[1] This specification is under the jurisdiction of the ASTM Committee A04 on Iron Castings and is the direct responsibility of Subcommittee A04.02 on Malleable and Ductile Iron Castings.

Current edition approved June 1, 2006. Published June 2006. Originally approved in 1966. Last previous edition approved in 2001 as A 571/A 571M – 01.

[2] For ASME Boiler and Pressure Vessel Code applications see related Specification SA-571 in Section II of that code.

[3] For referenced ASTM standards, visit the ASTM website, www.astm.org, or contact ASTM Customer Service at service@astm.org. For *Annual Book of ASTM Standards* volume information, refer to the standard's Document Summary page on the ASTM website.

[4] Withdrawn.

Copyright © ASTM International, 100 Barr Harbor Drive, PO Box C700, West Conshohocken, PA 19428-2959, United States.

Copyright ASTM International
Provided by IHS under license with ASTM
No reproduction or networking permitted without license from IHS
Not for Resale

TABLE 1 Mechanical Property Requirements[A]

	Class 1	Class 2	Class 3	Class 4
Tensile Strength, min, ksi [mPa]	65	60	[450]	[415]
Yield Strength 0.2 % (offset), min, ksi [mPa][B]	30	25	[205]	[170]
Elongation, min, %	30	25	30	25
Brinell Hardness, 3000 kg [kgf]	121–171	111–171	121–171	111–171
Charpy V-notch, ft·lbf [J]				
min, average 3 tests	15	20	[20]	[27]
min, individual test[C]	12	15	[16]	[20]

[A] Heat-treated condition.
[B] Yield Strength shall be determined at 0.2 % offset by the offset method, see Test Methods E 8. Other methods may be agreed upon by mutual consent of manufacturer and purchaser.
[C] Not more than one test in a set of three may be below the minimum average required for the set of three.

TABLE 2 Chemical Requirements

Element	Composition, %
Total carbon	2.2–2.7[A]
Silicon	1.5–2.50
Manganese	3.75–4.5
Nickel	21.0–24.0
Chromium	0.20 max[B]
Phosphorus	0.08 max

[A] For castings with sections under ¼ in. [6 mm], it may be desirable to adjust the carbon upwards to a maximum of 2.90 %.
[B] Not intentionally added.

6. Physical Property Requirements

6.1 *Tensile Properties*—The room temperature mechanical properties of the two classes of ductile iron used for the casting shall conform to the requirements for the heat-treated condition shown in Table 1.

6.2 *Impact Properties*—The notched-bar impact properties of the materials shall be determined by testing a set of three Charpy V-notch impact specimens to the energy absorption requirements shown in Table 1. The test temperature shall be agreed upon by the manufacturer and the purchaser. The energy absorption value shown in Table 1 are applicable at temperatures down to and including −320°F [−195°C].

6.3 *Brinell Hardness*—The room temperature hardness of test bars and castings shall conform to the requirements of Table 1.

7. Workmanship, Finish, and Appearance

7.1 The castings shall conform to the dimensions and tolerances on the drawings furnished by the purchaser, or if no drawing has been provided, to the dimensions predicated by the pattern supplied by the purchaser. The castings shall be free from injurious defects. Surfaces of the castings shall be free of burnt-on sand and shall be reasonably smooth. Runners, risers, fins, and other useless cast-on pieces shall be removed. In other respects the castings shall conform to whatever points may be specifically agreed upon between the manufacturer and the purchaser.

8. Sampling

8.1 The standard test coupons shall be the 1-in. [25-mm] "Y" block and 1-in. [25-mm] keel block as shown in Fig. 1 and Fig. 2, respectively.

8.2 The separately cast test coupons from which the tension test specimens are machined shall be cast to the size and shape

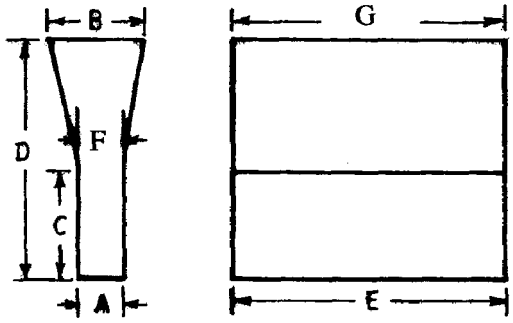

"Y" Block Size

Dimensions	"Y" Block Size		
	For Castings of Thickness Less Than ½ in. [12.5 mm]	For Castings of Thickness ½ to 1½ in. [12.5 to 40 mm]	For Castings of Thickness of 1½ in. [40 mm] and Over
	in. [mm]	in. [mm]	in. [mm]
A	½ [12.5]	1 [25]	3 [75]
B	1 [25]	2⅛ [55]	5 [125]
C	2 [50]	3 [75]	4 [100]
D	4 [100]	6 [150]	8 [200]
E	7 [175] approx	7 [175] approx	7 [175] approx
F	9/16 [14]	1 1/16 [27]	3 1/16 [78]
G	7⅛ [180] approx	7⅛ [180] approx	7⅛ [180] approx

FIG. 1 "Y" Blocks for Test Coupons

shown in Fig. 1 or Fig. 2. The size of coupon cast to represent the casting shall be at the option of the purchaser. In case no option is expressed, the manufacturer shall make the choice.

8.3 Test coupons shall be poured immediately after the castings and from the same ladle of metal. Test coupons shall be left in the mold until they have cooled black. Test coupons shall be included in the same furnace load as the castings they represent (see Fig. 3).

9. Number of Tests and Retests

9.1 Test coupons shall be poured from each ladle treated with nodulizing agent unless otherwise specified.

9.2 The number of representative coupons poured and tested shall be established by the manufacturer, unless otherwise agreed upon with the purchaser.

9.3 One tension test at room temperature and three impact tests at the required temperature shall be performed from each ladle treated with nodulizing agent unless otherwise specified.

Copyright ASTM International
Provided by IHS under license with ASTM
No reproduction or networking permitted without license from IHS
Not for Resale

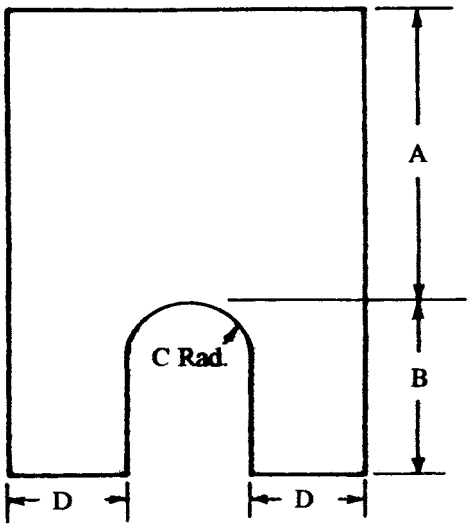

NOTE—The length of the keel block shall be 6 in. [150 mm].

Keel Block Dimensions

Dimensions	in.	[mm]
A	2½	60
B	1½	40
C	½	13
D	1	25

FIG. 2 Keel Block for Test Coupons

9.4 If any test specimens (tension or impact) show obvious foundry defects, another specimen may be cut from the same test coupon or from another test coupon representing the same metal. The manufacturer may reheat treat castings, but only once without requiring approval of the purchaser, if the test results do not conform to the requirements specified.

9.5 Failure of the retest specimen to conform to this specification shall be cause for rejection of the castings that they represent.

10. Specimen Preparation

10.1 Tension test specimens shall be the standard round specimen with 2-in. [50-mm] gage length (Fig. 4) except when the ½-in. [12.5-mm] "Y" block is being used. In this case, either of the test specimens shown in Fig. 5 shall be satisfactory.

10.2 Impact test specimens shall be machined to the form shown for Type A in Test Methods E 23.

11. Test Methods

11.1 *Chemical Analysis*—All chemical analyses shall be made in accordance with the following methods: Practice E 59, and Test Methods E 30, or by spectrographic methods. Should a dispute arise concerning the chemical composition when spectrographic techniques are used, the methods specified in Practice E 59 and Test Methods E 30 shall be used as umpire methods.

11.2 *Impact Test*:

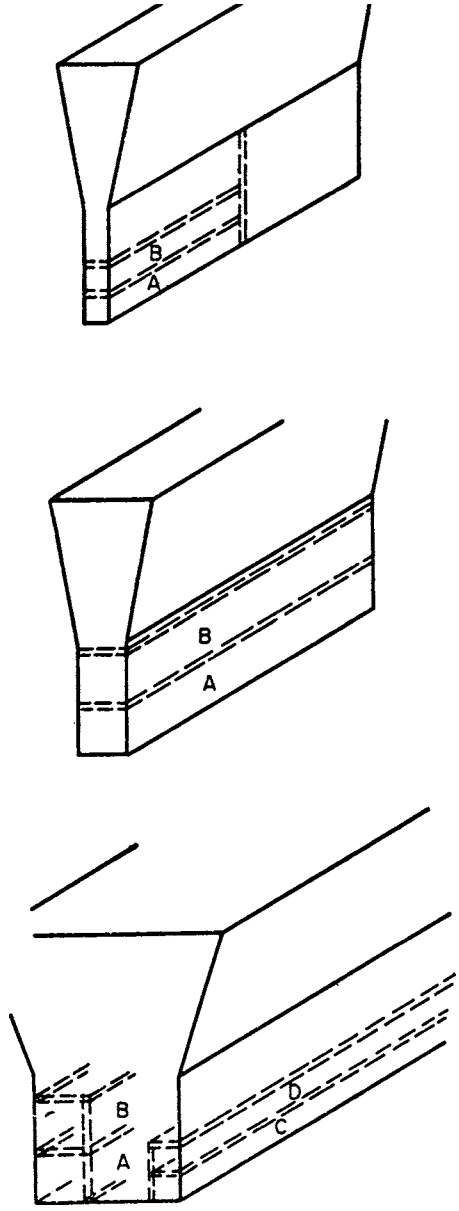

(*a*) ½-in. [12.5-mm] "Y"-Block—Two blanks for 0.252-in. [6.5-mm] diameter tension test specimens.
(*b*) 1-in. [25-mm] "Y"-Block—Two blanks for 0.50-in. [12.5-mm] diameter tension test specimens or impact specimens.
(*c*) 3-in. [75-mm] "Y"-Block—Two blanks for 0.50-in. [12.5-mm] diameter tension test specimens and two blanks for impact specimens.

FIG. 3 Sectioning Procedure for "Y" Blocks

11.2.1 The notched-bar impact test shall be made in accordance with the procedure for the simple beam Type A Charpy test described in Test Methods E 23.

11.2.2 In particular, impact tests at these low temperatures should be made with the following precautions: The impact test specimens as well as the handling tongs shall be cooled a sufficient time in a suitable container so that both reach the desired temperature. The temperature shall be measured with thermocouples, thermometers, or any other suitable devices and shall be controlled within ±10°F [6°C]. The specimens shall be quickly transferred from the cooling device to the anvil

Copyright ASTM International
Provided by IHS under license with ASTM
No reproduction or networking permitted without license from IHS
Not for Resale

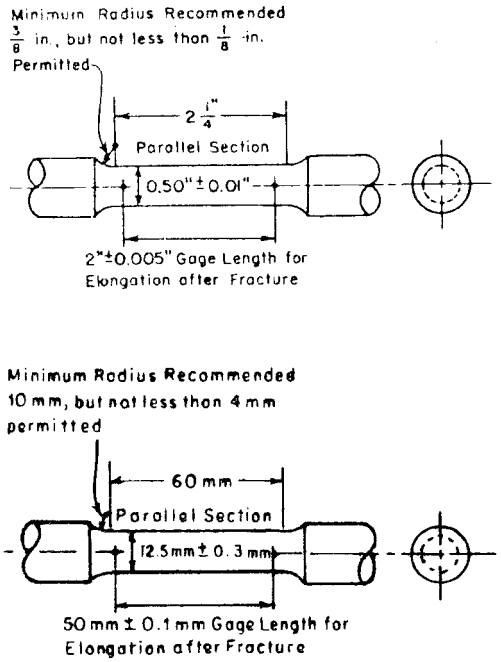

NOTE—The gage length fillets shall be as shown but the ends may be of any shape to fit the holders of the testing machine in such a way that the load shall be axial. The reduced section shall have a gradual taper from the ends toward the center, with the ends 0.003 to 0.005 in. [0.08 to 0.13 mm] larger in diameter than the center.

FIG. 4 Standard Round Tension Test Specimen with 2-in. [50-mm] Gage Length

of the Charpy impact testing machine and broken with a time lapse of not more than 5 s.

12. Special Tests

12.1 *Hydrostatic Pressure Tests*:

12.1.1 Each pressure-containing casting, where practicable, shall be tested after machining to the test pressure specified by any applicable code and shall show no leaks. Castings ordered under this specification not covered by any pertinent specification and castings ordered for special service applications shall be tested to such pressures as may be established by the purchaser.

12.1.2 Although the foundry cannot always perform the required pressure testing on unmachined castings, they shall be responsible for the satisfactory performance of the castings under the final tests required in 12.1.1.

12.2 *Additional Tests*:

12.2.1 Radiographic standards, fracture tests, microstructure standards, liquid penetrant tests, or any other special tests may be required when so specified in the inquiry, contract or order and when mutually agreed upon by the manufacturer and purchaser.

12.2.2 Due to the very low magnetic permeability of this material, the magnetic particle inspection test is not an acceptable method of qualification.

13. Inspection

13.1 The inspector representing the purchaser shall have entry at all times, while work on the contract of the purchaser

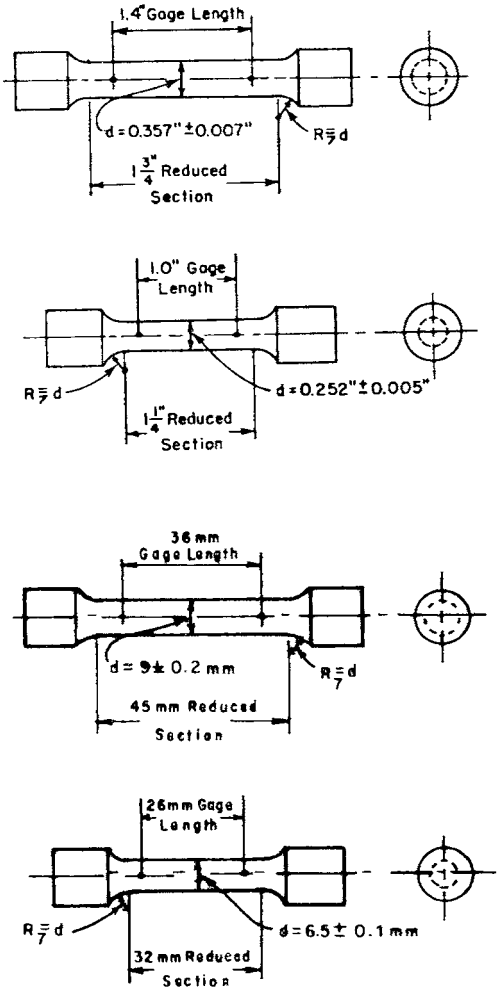

NOTE—If desired, the length of the reduced section may be increased to accommodate an extensometer.

FIG. 5 Examples of Small-Size Specimens Proportional to Standard ½-in. [12.5-mm] Round Specimen

is being performed, to all parts of the manufacturer's works which concern the manufacture of the materials ordered. The manufacturer shall afford the inspector all reasonable facilities to satisfy him that the material is being furnished in accordance with this specification. Unless otherwise specified, all tests and inspection shall be made at the place of manufacture prior to shipment, and shall be so conducted as not to interfere unnecessarily with the operation of the works.

14. Certification

14.1 When agreed upon in writing by the purchaser and the seller, a certification shall be made the basis of acceptance of the material. This shall consist of a copy of the manufacturer's test report or a statement by the seller, accompanied by a copy of the test results, that the material has been tested and inspected in accordance with the provisions of this specification. Each certification so furnished shall be signed by an authorized agent of the seller or manufacturer.

Copyright ASTM International
Provided by IHS under license with ASTM
No reproduction or networking permitted without license from IHS
Not for Resale

APPENDIX

(Nonmandatory Information)

X1. Y-BLOCK SELECTION

X1.1 As a general guide for selection of the proper Y-block, the tabulation in Table X1.1, based on coolingrates, shows, for various test coupons, the equivalent geometric shapes with various dimensions.

TABLE X1.1 Equivalent Geometric Shapes Corresponding to Y-blocks

Y-Block Size, in. [mm]	Infinite Plate, Thickness, in. [mm]	Round, Diameter, in. [mm]	Cube Edge, in. [mm]
½ [12.5]	0.5 [12.5]	1.2 [30]	1.75 [44]
1 [25]	0.9 [22.5]	1.75 [44]	2.75 [69]
3 [75]	1.6 [40]	3.1 [78]	4.8 [120]

ASTM International takes no position respecting the validity of any patent rights asserted in connection with any item mentioned in this standard. Users of this standard are expressly advised that determination of the validity of any such patent rights, and the risk of infringement of such rights, are entirely their own responsibility.

This standard is subject to revision at any time by the responsible technical committee and must be reviewed every five years and if not revised, either reapproved or withdrawn. Your comments are invited either for revision of this standard or for additional standards and should be addressed to ASTM International Headquarters. Your comments will receive careful consideration at a meeting of the responsible technical committee, which you may attend. If you feel that your comments have not received a fair hearing you should make your views known to the ASTM Committee on Standards, at the address shown below.

This standard is copyrighted by ASTM International, 100 Barr Harbor Drive, PO Box C700, West Conshohocken, PA 19428-2959, United States. Individual reprints (single or multiple copies) of this standard may be obtained by contacting ASTM at the above address or at 610-832-9585 (phone), 610-832-9555 (fax), or service@astm.org (e-mail); or through the ASTM website (www.astm.org).

Copyright ASTM International
Provided by IHS under license with ASTM
No reproduction or networking permitted without license from IHS
Not for Resale