Designation: A 536 – 84 (Reapproved 2004)

Standard Specification for Ductile Iron Castings[1]

This standard is issued under the fixed designation A 536; the number immediately following the designation indicates the year of original adoption or, in the case of revision, the year of last revision. A number in parentheses indicates the year of last reapproval. A superscript epsilon (ε) indicates an editorial change since the last revision or reapproval.

This standard has been approved for use by agencies of the Department of Defense.

1. Scope

1.1 This specification covers castings made of ductile iron, also known as spheroidal or nodular iron, that is described as cast iron with the graphite substantially spheroidal in shape and essentially free of other forms of graphite, as defined in Terminology A 644.

1.2 The values stated in inch-pound units are to be regarded as the standard.

1.3 No precise quantitative relationship can be stated between the properties of the iron in various locations of the same casting or between the properties of castings and those of a test specimen cast from the same iron (see Appendix X1).

2. Referenced Documents

2.1 *ASTM Standards:* [2]

A 370 Test Methods and Definitions for Mechanical Testing of Steel Products

A 644 Terminology Relating to Iron Castings

A 732/A 732M Specification for Castings, Investment, Carbon and Low Alloy Steel for General Application, and Cobalt Alloy for High Strength at Elevated Temperatures

E 8 Test Methods for Tension Testing of Metallic Materials

2.2 *Military Standard:*[3]

MIL-STD-129 Marking for Shipment and Storage

3. Ordering Information

3.1 Orders for material to this specification shall include the following information:

3.1.1 ASTM designation,

3.1.2 Grade of ductile iron required (see Table 1, and Sections 4 and 9),

3.1.3 Special properties, if required (see Section 7),

3.1.4 If a different number of samples are required (see Section 10),

3.1.5 Certification, if required (see Section 14), and

3.1.6 Special preparation for delivery, if required (see Section 15).

4. Tensile Requirements

4.1 The iron represented by the test specimens shall conform to the requirements as to tensile properties presented in Tables 1 and 2. The irons listed in Table 1 cover those in general use, while those listed in Table 2 are used for special applications (such as pipes, fittings, etc.).

4.2 The yield strength shall be determined at 0.2 % offset by the offset method (see Test Methods E 8). Other methods may be used by mutual consent of the manufacturer and purchaser.

5. Heat Treatment

5.1 The 60-40-18 grade will normally require a full ferritizing anneal. The 120-90-02 and the 100-70-03 grades generally require a quench and temper or a normalize and temper, or an isothermal heat treatment. The other two grades can be met either as-cast or by heat treatment. Ductile iron, which is heat treated by quenching to martensite and tempering, may have substantially lower fatigue strength than as-cast material of the same hardness.

6. Test Coupons

6.1 The separately cast test coupons from which the tension test specimens are machined shall be cast to the size and shape shown in Fig. 1 or Fig. 2. A modified keel block cast from the mold shown in Fig. 3 may be substituted for the 1-in. Y-block or the 1-in. keel block. The test coupons shall be cast in open molds made of suitable core sand having a minimum wall thickness of 1½ in. (38 mm) for the ½-in. (12.5 mm) and 1-in. (25-mm) sizes and 3 in. (75 mm) for the 3-in. size. The coupons shall be left in the mold until they have cooled to a black color (approximately 900°F (482°C) or less). The size of coupon cast to represent the casting shall be at the option of the purchaser. In case no option is expressed, the manufacturer shall make the choice.

---

[1] This specification is under the jurisdiction of the ASTM Committee A04 on Castings and is the direct responsibility of Subcommittee A04.02 on Malleable and Ductile Iron Castings.

Current edition approved Oct. 1, 2004. Published October 2004. Originally approved in 1965. Last previous edition approved in 1999 as A 536 – 84 (1999)$^{\epsilon 1}$.

[2] For referenced ASTM standards, visit the ASTM website, www.astm.org, or contact ASTM Customer Service at service@astm.org. For *Annual Book of ASTM Standards* volume information, refer to the standard's Document Summary page on the ASTM website.

[3] Available from Standardization Documents Order Desk, DODSSP, Bldg. 4, Section D, 700 Robbins Ave., Philadelphia, PA 19111-5098

Copyright © ASTM International, 100 Barr Harbor Drive, PO Box C700, West Conshohocken, PA 19428-2959, United States.

Copyright ASTM International
Reproduced by IHS under license with ASTM
No reproduction or networking permitted without license from IHS
Not for Resale

TABLE 1 Tensile Requirements

	Grade 60-40-18	Grade 65-45-12	Grade 80-55-06	Grade 100-70-03	Grade 120-90-02
Tensile strength, min, psi	60 000	65 000	80 000	100 000	120 000
Tensile strength, min, MPa	414	448	552	689	827
Yield strength, min, psi	40 000	45 000	55 000	70 000	90 000
Yield strength, min, MPa	276	310	379	483	621
Elongation in 2 in. or 50 mm, min, %	18	12	6.0	3.0	2.0

TABLE 2 Tensile Requirements for Special Applications

	Grade 60-42-10	Grade 70-50-05	Grade 80-60-03
Tensile strength, min, psi	60 000	70 000	80 000
Tensile strength, min, MPa	415	485	555
Yield strength, min, psi	42 000	50 000	60 000
Yield strength, min, MPa	290	345	415
Elongation in 2 in. or 50 mm, min, %	10	5	3

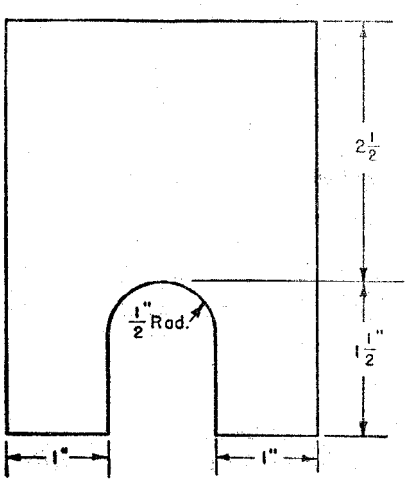

Metric Equivalents			
in.	mm	in.	mm
½	12.7	1½	38.1
1	25.4	2½	63.5

NOTE—The length of the keel block shall be 6 in. (152 mm).

FIG. 1 Keel Block for Test Coupons

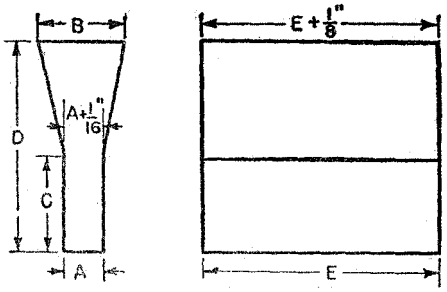

Dimensions	"Y" Block Size: For Castings of Thickness Less Than ½ in. (13 mm)		For Castings of Thickness ½ in. (13 mm) to 1½ in. (38 mm)		For Castings of Thickness of 1½ in. (38 mm) and Over	
	in.	mm	in.	mm	in.	mm
A	½	13	1	25	3	75
B	1⅝	40	2⅛	54	5	125
C	2	50	3	75	4	100
D	4	100	6	150	8	200
E	7 approx	175 approx	7 approx	175 approx	7 approx	175 approx

FIG. 2 Y-Blocks for Test Coupons

6.2 When investment castings are made to this specification, the manufacturer may use test specimens cast to size incorporated in the mold with the castings, or separately cast to size using the same type of mold and the same thermal conditions that are used to produce the castings. These test specimens shall be made to the dimensions shown in Fig. 1 of Specification A 732/A 732M or Figs. 5 and 6 of Test Methods and Definitions A 370.

6.3 The manufacturer may use separately cast test coupons or test specimens cut from castings when castings made to this specification are nodularized or inoculated in the mold. Separately cast test coupons shall have a chemistry that is representative of castings produced from the ladle poured and a cooling rate equivalent to that obtained with the test molds shown in Figs. 1 and 2, Figs. 4-6, or Appendix X2. The size (cooling rate) of the coupon chosen to represent the casting should be decided by the purchaser. If test coupon size is not specified, the manufacturer shall make the choice. When test bars will be cut from castings, test bar location shall be agreed on by the purchaser and manufacturer and indicated on the casting drawing. The manufacturer shall maintain sufficient controls and control documentation to assure the purchaser that properties determined from test coupons or test bars are representative of castings shipped.

6.4 The test coupons shall be poured from the same ladle or heat as the castings they represent.

6.5 Test coupons shall be subjected to the same thermal treatment as the castings they represent.

7. Special Requirements

7.1 When specified in the contract or purchase order, castings shall meet special requirements as to hardness, chemical composition, microstructure, pressure tightness, radiographic soundness, magnetic particle inspection dimensions, and surface finish.

8. Workmanship, Finish, and Appearance

8.1 The castings shall be smooth, free of injurious defects, and shall conform substantially to the dimensions of the drawing or pattern supplied by the purchaser.

8.2 Castings shall not have chilled corners or center chill in areas to be machined.

Copyright ASTM International
Reproduced by IHS under license with ASTM
No reproduction or networking permitted without license from IHS
Not for Resale

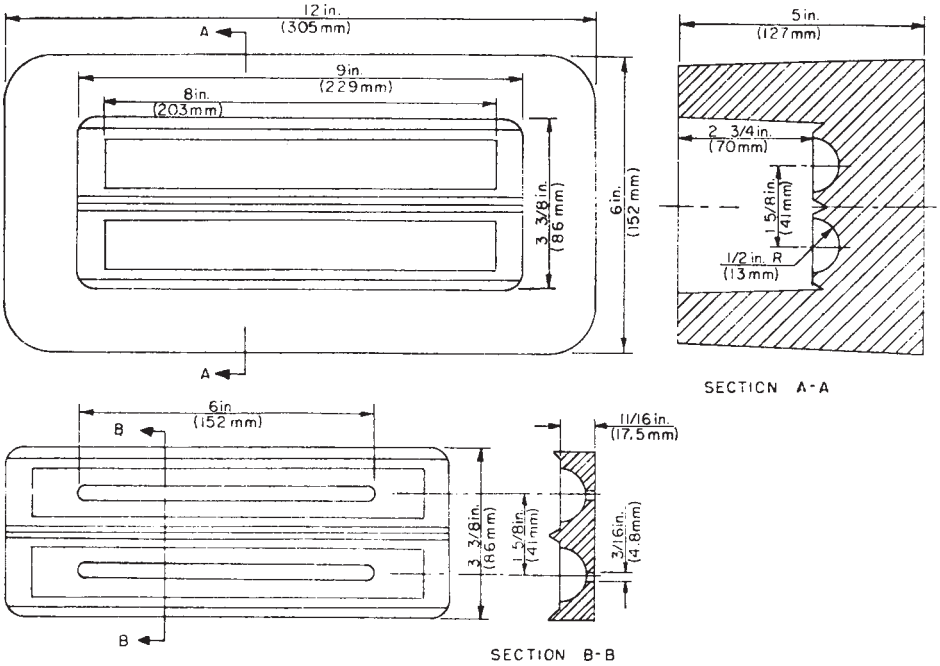

FIG. 3 Mold for Modified Keel Block

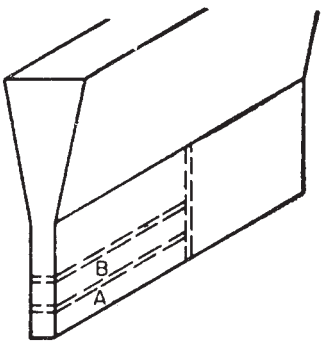

(*a*) *½-in. (12.7-mm) Y-block*—Two blanks for 0.252-in. (6.40-mm) diameter test specimens.

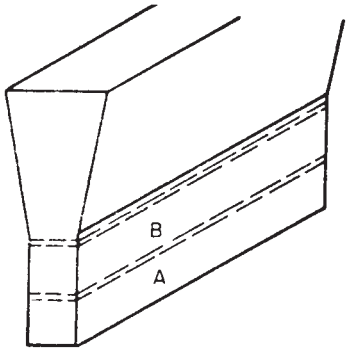

(*b*) *1-in. (25.4-mm) Y-Block*—Two blanks for 0.50-in. (12.7-mm) diameter tension test specimens.

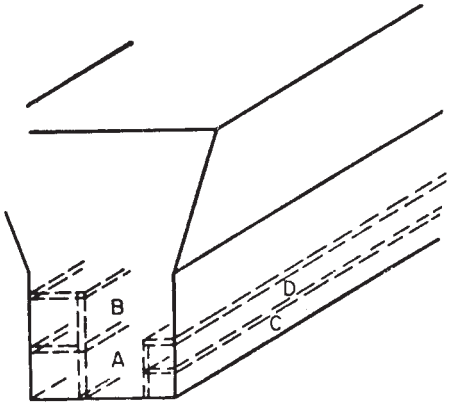

(*c*) *3-in. (76.2-mm) Y-Block*—Two blanks for 0.50-in. (12.7-mm) diameter tension test specimens.

FIG. 4 Sectioning Procedure for Y-Blocks

Copyright ASTM International
Reproduced by IHS under license with ASTM
No reproduction or networking permitted without license from IHS
Not for Resale

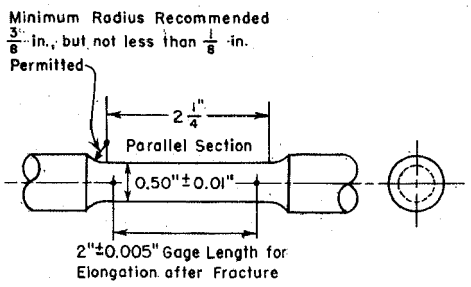

Metric Equivalents

in.	mm	in.	mm
0.005	0.13	0.50	12.7
0.10	2.5	2	50.8
⅛	3.2		
⅜	9.5	2¼	57.2

NOTE—The gage length and fillets shall be as shown but the ends may be of any shape to fit the holders of the testing machine in such a way that the load shall be axial. The reduced section shall have a gradual taper from the ends toward the center, with the ends 0.003 to 0.005 in. (0.08 to 0.13 mm) larger in diameter than the center.

FIG. 5 Standard Round Tension Test Specimen with 2-in. or 50-mm Gage Length

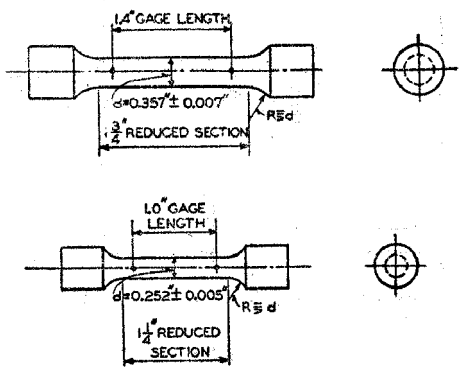

Metric Equivalents

in.	mm	in.	mm
0.005	0.13	1.0	25.4
0.007	0.18	1¼	31.8
0.252	6.40	1.4	35.6
0.357	9.07	1¾	44.4

NOTE—If desired, the length of the reduced section may be increased to accommodate an extensometer.

FIG. 6 Examples of Small-Size Specimens Proportional to Standard ½-in. (12.7-mm) Round Specimen

9. Chemical Requirements

9.1 It is the intent of this specification to subordinate chemical composition to mechanical properties; however, any chemical requirements may be specified by agreement between the manufacturer and the purchaser.

10. Number of Tests and Retests

10.1 The number of representative coupons poured and tested shall be established by the manufacturer, unless otherwise agreed upon with the purchaser.

10.2 In the case of the Y-block, the section shall be cut from the block as shown in Fig. 4. If any tension test specimen shows obvious defects, another may be cut from the same test block or from another test block representing the same metal.

11. Tension Test Specimen

11.1 The standard round tension test specimen with a 2-in. or 50-mm gage length shown in Fig. 5 shall be used, except when the ½-in. (12.7-mm) Y-block coupon is used. In this case, either of the test specimens shown in Fig. 6 shall be satisfactory.

12. Responsibility for Inspection

12.1 Unless otherwise specified in the contract or purchase order, the supplier is responsible for the performance of all inspection requirements as specified herein. Except as otherwise specified in the contract or order, the supplier may use his own or any other facilities suitable for the performance of the inspection requirements specified herein, unless disapproved by the purchaser. The purchaser reserves the right to perform any of the inspections set forth in the specification where such inspections are deemed necessary to assure supplies and services conform to prescribed requirements.

13. Identification Marking

13.1 When size permits, each casting shall be identified by the part or pattern number in raised numerals. Location of marking shall be as shown on the applicable drawing.

14. Certification

14.1 When agreed upon in writing by the purchaser and the seller, a certification shall be made the basis of acceptance of the material. This shall consist of a copy of the manufacturer's test report or a statement by the seller, accompanied by a copy of the test results, that the material has been sampled, tested, and inspected in accordance with provisions of this specification. Each certification so furnished shall be signed by an authorized agent of the seller or manufacturer.

15. Preparation for Delivery

15.1 Unless otherwise specified in the contract or purchase order, cleaning, drying, preservation, and packaging of casting shall be in accordance with manufacturer's commercial practice. Packing and marking shall also be adequate to ensure acceptance and safe delivery by the carrier for the mode of transportation employed.

15.2 *Government Procurement*—When specified in the contract or purchase order marking for shipment shall be in accordance with the requirements of MIL-STD-129.

16. Keywords

16.1 casting; ductile iron; modular iron; spheroidal graphite

Copyright ASTM International
Reproduced by IHS under license with ASTM
No reproduction or networking permitted without license from IHS
Not for Resale

APPENDIXES

(Nonmandatory Information)

X1. MECHANICAL PROPERTIES OF CASTINGS

X1.1 The mechanical properties of iron castings are influenced by the cooling rate during and after solidification, by chemical composition, by heat treatment, by the design and nature of the mold, by the location and effectiveness of gates and risers, and by certain other factors.

X1.2 The cooling rate in the mold and, therefore, the properties developed in any particular section are influenced by the presence of cores, chills and chaplets, changes in section thickness, and the existence of bosses, projections, and intersections, such as junctions of ribs and bosses. Because of the interactions of these factors, no precise quantitative relationship can be stated between the properties of the iron in various locations of the same casting or between the properties of a casting and those of a test specimen cast from the same iron. When such a relationship is important and must be known for a specific application, it may be more closely ascertained by appropriate experimentation.

X1.3 When reliable information is unavailable on the relationship between properties in a casting and those in a separately cast test specimen, and where experimentation would be unfeasible, the size of the test casting should be so selected as to approximate the cooling rate of the main or controlling section of the casting.

X2. Y-BLOCK SELECTION

X2.1 As a general guide for selection of the proper Y-block, the tabulation in Table X2.1, based on cooling rates, shows, for various test coupons, the equivalent geometric shapes with various dimensions.

Copyright ASTM International
Reproduced by IHS under license with ASTM
No reproduction or networking permitted without license from IHS
Not for Resale

TABLE X2.1 Equivalent Geometric Shapes Corresponding to Y-Blocks

Y-Block Size, in. (mm)	Infinite Plate Thickness, in. (mm)	Round Diameter, in. (mm)	Cube Edge, in. (mm)
½ (12.7)	0.5 (12.7)	1.2 (30.5)	1.75 (44.4)
1 (25.4)	0.9 (22.9)	1.75 (44.4)	2.75 (69.8)
3 (76.2)	1.6 (40.6)	3.1 (78.7)	4.8 (121.9)

ASTM International takes no position respecting the validity of any patent rights asserted in connection with any item mentioned in this standard. Users of this standard are expressly advised that determination of the validity of any such patent rights, and the risk of infringement of such rights, are entirely their own responsibility.

This standard is subject to revision at any time by the responsible technical committee and must be reviewed every five years and if not revised, either reapproved or withdrawn. Your comments are invited either for revision of this standard or for additional standards and should be addressed to ASTM International Headquarters. Your comments will receive careful consideration at a meeting of the responsible technical committee, which you may attend. If you feel that your comments have not received a fair hearing you should make your views known to the ASTM Committee on Standards, at the address shown below.

This standard is copyrighted by ASTM International, 100 Barr Harbor Drive, PO Box C700, West Conshohocken, PA 19428-2959, United States. Individual reprints (single or multiple copies) of this standard may be obtained by contacting ASTM at the above address or at 610-832-9585 (phone), 610-832-9555 (fax), or service@astm.org (e-mail); or through the ASTM website (www.astm.org).

--`,,,,`,,-`-`,,`,,`,`,,`---

Copyright ASTM International
Reproduced by IHS under license with ASTM
No reproduction or networking permitted without license from IHS

Not for Resale