Designation: A 503/A 503M – 01 (Reapproved 2006)

Standard Specification for Ultrasonic Examination of Forged Crankshafts[1]

This standard is issued under the fixed designation A 503/A 503M; the number immediately following the designation indicates the year of original adoption or, in the case of revision, the year of last revision. A number in parentheses indicates the year of last reapproval. A superscript epsilon (ε) indicates an editorial change since the last revision or reapproval.

1. Scope

1.1 This is an acceptance specification for the ultrasonic inspection of forged steel crankshafts having main bearing journals or crankpins 4 in. [100 mm] or larger in diameter.

1.2 This specification covers the testing equipment required and the test procedure to be followed, and it defines the critical and noncritical areas and limits of acceptance.

1.3 This specification is intended to cover both continuous grain flow (CGF) crankshafts for medium and high speed diesel engines as well as solid (slab) forged crankshafts for other applications.

1.4 The values stated in either inch-pound units or SI (metric) units are to be regarded separately as the standard. Within the text and tables, the SI units are shown in brackets. The values stated in each system shall be used independently of the other. Combining values from the two systems may result in nonconformance with the specification.

1.5 Unless the order specifies the applicable "M" specification designation, the inch-pound units shall be used.

1.6 *This standard does not purport to address all of the safety concerns, if any, associated with its use. It is the responsibility of the user of this standard to establish appropriate safety and health practices and determine the applicability of regulatory limitations prior to use.*

2. Referenced Documents

2.1 *ASTM Standards:* [2]

A 388/A 388M Practice for Ultrasonic Examination of Heavy Steel Forgings

E 428 Practice for Fabrication and Control of Metal, Other than Aluminum Reference, Blocks Used in Ultrasonic Examination

2.2 *American National Standard:*[3]

ANSI B46.1, Surface Texture

3. Terminology

3.1 *Definitions:*

3.1.1 *continuous grain flow crankshafts*—produced by a process in which the solidification centerline of the original ingot or starting stock is maintained through the main bearings, webs, crankpins, and flanges of the finished crankshaft, usually by means of closed die forging.

3.1.2 *solid (slab) forged crankshafts*—made from open die forgings such that the grain flow in the webs is essentially parallel to the major axis of the forging and the crankpins are offset from the forging centerline by machining. They may be set in the correct orientation by a hot twisting operation.

4. Ordering Information

4.1 It is necessary that the crankshaft be identified as being either continuous grain flow or solid (slab) forged.

4.2 Unless otherwise specified by means of supplementary ordering information, the test methods and acceptance criteria for the appropriate crankshaft type shall be used.

5. Apparatus and Personnel Requirements

5.1 The apparatus and personnel requirements shall be in accordance with Practice A 388/A 388M. For standardization purposes, it is recommended that final acceptance be based on the use of 2–5 MHz transducers.

6. Critical Sections

6.1 The division of a crankshaft into three volumetric zones, as shown in Fig. 1 and Fig. 2, for the purpose of ultrasonic examination evaluation is applicable to both solid (slab) forged and continuous grain flow crankshafts.

[1] This specification is under the jurisdiction of ASTM Committee A01 on Steel, Stainless Steel and Related Alloys and is the direct responsibility of Subcommittee A01.06 on Steel Forgings and Billets.

Current edition approved March 1, 2006. Published April 2006. Originally approved in 1964. Last previous edition approved in 2001 as A 503/A 503M – 01 (2001)ε1.

[2] For referenced ASTM standards, visit the ASTM website, www.astm.org, or contact ASTM Customer Service at service@astm.org. For *Annual Book of ASTM Standards* volume information, refer to the standard's Document Summary page on the ASTM website.

[3] Available from American National Standards Institute, 11 W. 42nd St., 13th Floor, New York, NY 10036.

Copyright © ASTM International, 100 Barr Harbor Drive, PO Box C700, West Conshohocken, PA 19428-2959, United States.

Copyright ASTM International
Provided by IHS under license with ASTM
No reproduction or networking permitted without license from IHS
Copyright by ASTM Int'l (all rights reserved);
Reproduction authorized per License Agreement with Monique Tyree (ASTMIHS Account); Mon Apr 17 13:17:19 EDT 2006
Not for Resale

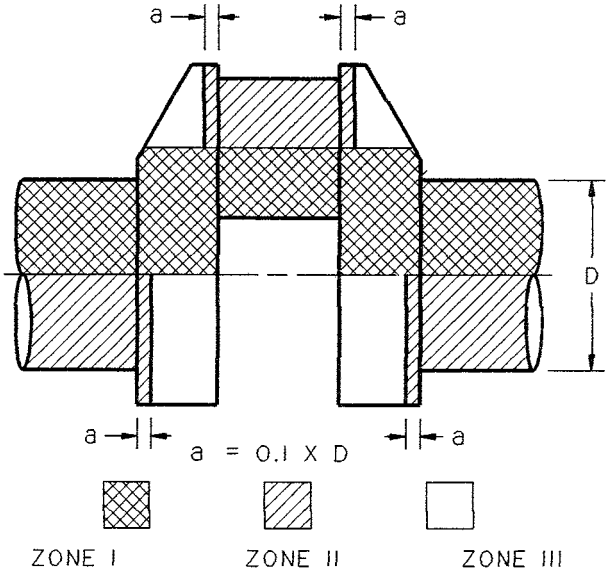

FIG. 1 Crankshaft UT Acceptance Zones

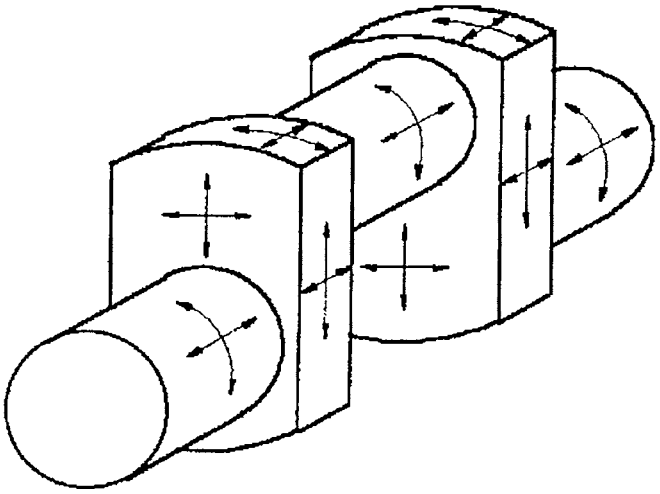

FIG. 2 Scanning Directions

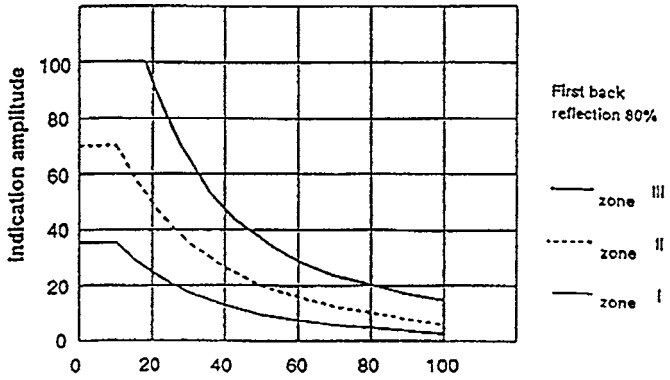

FIG. 3 Distance to Indication as Percentage of Cross-section

6.2 The major critical sections shown as Zone 1 in Fig. 1 include the heavily loaded areas of the crankpins, webs, and main bearings.

6.3 The minor critical sections shown as Zone 2 in Fig. 1 include the balance of the surface areas of the main bearing and crankpin journals and adjacent fillets, flanges, and gear fit areas.

6.4 The balance of the crankshaft as shown in Fig. 1, including the remaining sections of the webs, is included in Zone 3.

7. Calibration of Ultrasonic Equipment on Crankshaft

7.1 For solid (slab) forged crankshafts, the sensitivity of the instrument shall be adjusted so that the thickness to be examined will give a full-scale back reflection. Such calibrations shall be done in an area free of interfering indications.

7.2 For CGF crankshafts, 80 % of the full-scale back reflection is used when evaluating indications in accordance with Fig. 3.

8. Procedure

8.1 The crankshaft should be examined after heat treatment, but before machining geometric features such as chamfers and oil holes that could interfere with ultrasonic examination.

8.2 Unless otherwise specified by the purchase order, the scanned surfaces shall have a maximum surface roughness of 250 µin. [6.35 µm].

8.3 The crankshaft shall be scanned as shown in Fig. 2.

9. Acceptance Criteria

9.1 *Acceptance Zones*:

9.1.1 For acceptance purposes, the crankshaft shall be divided into three zones as shown in Fig. 1.

9.1.2 Because of crankshaft geometry, particularly for CGF crankshafts, the ultrasonic examination shall be carried out to the maximum extent possible.

9.2 *Solid Forged Crankshafts*:

9.2.1 In Zone 1, indications equal to or greater than 20 % of the back reflection as established in 7.1 shall be cause for rejection.

9.2.2 Indications in Zone 2 equal to or greater than 50 % of the back reflection shall be cause for rejection.

Copyright ASTM International
Provided by IHS under license with ASTM
No reproduction or networking permitted without license from IHS
Copyright by ASTM Int'l (all rights reserved);
Reproduction authorized per License Agreement with Monique Tyler (ASTMIHS Account); Mon Apr 17 13:17:19 EDT 2006
Not for Resale

9.2.3 Indications in Zone 3 equal to or greater than 100 % of the back reflection shall be cause for rejection.

9.2.4 Loss of back reflection in excess of 50 % in any zone, and not caused by geometric configuration, shall be recorded in terms of size and location. Normally this condition shall be cause for rejection, but it may be referred to the purchaser for disposition.

9.3 *Continuous Grain Flow Crankshafts (CGF)*:

9.3.1 Ultrasonic indications detected in CGF crankshafts shall be evaluated in accordance with Fig. 3. Indications that exceed the appropriate zone curve are cause for rejection.

9.3.2 Loss of back reflection in excess of 50 % in any zone, and not attributable to geometric configuration shall be recorded in terms of percentage loss and location. Normally this condition shall be cause for rejection, but it may be referred to the purchaser for disposition.

10. Keywords

10.1 contact method; continuous grain flow; crankshafts; forged steel; slab forged; ultrasonic examination

SUPPLEMENTARY REQUIREMENTS

The following supplementary requirements shall apply only when specified by the purchaser in the inquiry or order. Details of these supplementary requirements shall be agreed upon by the manufacturer and the purchaser.

S1. Ultrasonic Testing: Reference Block Calibration

S1.1 A distance amplitude correction (DAC) curve shall be used to provide compensation for signal attenuation.

S1.1.1 Two or more reference specimens of incremental lengths shall be used to establish the DAC curve.

S1.1.2 The reference blocks shall be manufactured in accordance with Practice E 428.

S1.1.3 The DAC is established by placing the search unit on the reference block with the shortest distance to the test hole and adjusting the gain control to secure a signal response of 100 % full screen. The signal peak is marked on the screen. The procedure is repeated for succeeding greater test distances without altering the gain. The DAC curve is established by connecting adjoining peaks with a straight line.

S1.1.4 The basis for rejection shall be agreed upon between the purchaser and manufacturer.

S2. DGS Scales

S2.1 DGS scales similar to those described in Practice A 388/A 388M shall be used in the examination of either solid (slab) forged or CGF crankshafts.

S2.2 The acceptance curves shall be agreed upon between the purchaser and manufacturer.

ASTM International takes no position respecting the validity of any patent rights asserted in connection with any item mentioned in this standard. Users of this standard are expressly advised that determination of the validity of any such patent rights, and the risk of infringement of such rights, are entirely their own responsibility.

This standard is subject to revision at any time by the responsible technical committee and must be reviewed every five years and if not revised, either reapproved or withdrawn. Your comments are invited either for revision of this standard or for additional standards and should be addressed to ASTM International Headquarters. Your comments will receive careful consideration at a meeting of the responsible technical committee, which you may attend. If you feel that your comments have not received a fair hearing you should make your views known to the ASTM Committee on Standards, at the address shown below.

This standard is copyrighted by ASTM International, 100 Barr Harbor Drive, PO Box C700, West Conshohocken, PA 19428-2959, United States. Individual reprints (single or multiple copies) of this standard may be obtained by contacting ASTM at the above address or at 610-832-9585 (phone), 610-832-9555 (fax), or service@astm.org (e-mail); or through the ASTM website (www.astm.org).

Copyright ASTM International
Provided by IHS under license with ASTM
No reproduction or networking permitted without license from IHS
Copyright by ASTM Int'l (all rights reserved);
Reproduction authorized per License Agreement with Monique Tyree (ASTMIHS Account); Mon Apr 17 13:17:19 EDT 2006
Not for Resale