Designation: A 488/A 488M – 07

Standard Practice for Steel Castings, Welding, Qualifications of Procedures and Personnel[1]

This standard is issued under the fixed designation A 488/A 488M; the number immediately following the designation indicates the year of original adoption or, in the case of revision, the year of last revision. A number in parentheses indicates the year of last reapproval. A superscript epsilon (ε) indicates an editorial change since the last revision or reapproval.

This standard has been approved for use by agencies of the Department of Defense.

1. Scope*

1.1 This practice covers the qualification of procedures, welders, and operators for the fabrication and repair of steel castings by electric arc welding.

1.1.1 Qualifications of a procedure and either or both the operator or welder under Section IX of the ASME Boiler and Pressure Vessel Code shall automatically qualify the procedure and either or both the operator or welder under this practice. P-number designations in the ASME grouping of base metals for qualification may be different than the category numbers listed in Table 1. Refer to Appendix X1 for a comparison of ASTM category numbers with the corresponding ASME P-Number designations.

1.2 Each manufacturer or contractor is responsible for the welding done by his organization and shall conduct the tests required to qualify his welding procedures, welders, and operators.

1.3 Each manufacturer or contractor shall maintain a record of welding procedure qualification tests (Fig. 1), welder or operator performance qualification tests (Fig. 2), and welding procedure specification (Fig. 3), which shall be made available to the purchaser's representative on request.

1.4 The values stated in either inch-pound units or SI units are to be regarded separately as standard. Within the text, the SI units are shown in brackets. The values stated in each system are not exact equivalents; therefore, each system must be used independently of the other. Combining values from the two systems may result in nonconformance with this practice.

1.5 *This standard does not purport to address all of the safety concerns, if any, associated with its use. It is the responsibility of the user of this standard to establish appropriate safety and health practices and determine the applicability of regulatory limitations prior to use.*

2. Referenced Documents

2.1 *ASTM Standards:* [2]

A 27/A 27M Specification for Steel Castings, Carbon, for General Application

A 128/A 128M Specification for Steel Castings, Austenitic Manganese

A 148/A 148M Specification for Steel Castings, High Strength, for Structural Purposes

A 216/A 216M Specification for Steel Castings, Carbon, Suitable for Fusion Welding, for High-Temperature Service

A 217/A 217M Specification for Steel Castings, Martensitic Stainless and Alloy, for Pressure-Containing Parts, Suitable for High-Temperature Service

A 351/A 351M Specification for Castings, Austenitic, for Pressure-Containing Parts

A 352/A 352M Specification for Steel Castings, Ferritic and Martensitic, for Pressure-Containing Parts, Suitable for Low-Temperature Service

A 356/A 356M Specification for Steel Castings, Carbon, Low Alloy, and Stainless Steel, Heavy-Walled for Steam Turbines

A 370 Test Methods and Definitions for Mechanical Testing of Steel Products

A 389/A 389M Specification for Steel Castings, Alloy, Specially Heat-Treated, for Pressure-Containing Parts, Suitable for High-Temperature Service

A 447/A 447M Specification for Steel Castings, Chromium-Nickel-Iron Alloy (25-12 Class), for High-Temperature Service

A 487/A 487M Specification for Steel Castings Suitable for Pressure Service

A 494/A 494M Specification for Castings, Nickel and Nickel Alloy

[1] This practice is under the jurisdiction of ASTM Committee A01 on Steel, Stainless Steel and Related Alloys and is the direct responsibility of Subcommittee A01.18 on Castings.

Current edition approved May 1, 2007. Published May 2007. Originally approved in 1963. Last previous edition approved in 2006 as A 488/A 488M – 06.

[2] For referenced ASTM standards, visit the ASTM website, www.astm.org, or contact ASTM Customer Service at service@astm.org. For *Annual Book of ASTM Standards* volume information, refer to the standard's Document Summary page on the ASTM website.

***A Summary of Changes section appears at the end of this standard.**

Copyright © ASTM International, 100 Barr Harbor Drive, PO Box C700, West Conshohocken, PA 19428-2959, United States.

Copyright ASTM International
Provided by IHS under license with ASTM
No reproduction or networking permitted without license from IHS
Not for Resale

TABLE 1 Categories of Base Materials

Category Number	Material Description	ASTM Specification	Grades
1	Carbon steel (carbon less than 0.35 %, tensile strength less than or equal to 70 ksi [480 MPa]).	A 27/A 27M	all grades
		A 216/A 216M	WCA, WCB
		A 352/A 352M	LCB, LCA
		A 356/A 356M	1
		A 732/A 732M	1A, 2A
		A 757/A 757M	A1Q
		A 958	SC 1020, SC 1025, SC 1030, SC 1040, SC 1045, CLASSES 65/35, 70/36
2	Carbon steel (tensile strength greater than 70 ksi [480 MPa]). Carbon-manganese steel (tensile strength equal to or greater than 70 ksi but less than 90 ksi [620 MPa]).	A 148/A 148M	80-40
		A 216/A 216M	WCC
		A 352/A 352M	LCC
		A 732/A 732M	2Q, 3A
		A 757/A 757M	A2Q
		A 958	SC 1030, SC 1040, SC 1045, CLASSES 80/40, 80/50
3	Carbon and carbon-manganese steel (tensile strength equal to or greater than 90 ksi [620 MPa]).	A 732/A 732M	3Q, 4A, 4Q, 5N
		A 958	SC 1045, CLASSES 90/60, 105/85, 115/95
4	Low-alloy steel (annealed, normalized, or normalized and tempered. Tensile strength less than 85 ksi [585 MPa]).	A 148/A 148M	80-50
		A 217/A 217M	WC1, WC4, WC5, WC6, WC9
		A 352/A 352M	LC1, LC2, LC3, LC4
		A 356/A 356M	2, 5, 6, 8
		A 389/A 389M	C23, C24
		A 487/A 487M	11A, 12A, 16A
		A 757/A 757M	B2N, B3N, B4N
		A 958	SC 4130, SC 4140, SC 8620, SC 8625, SC 8630, CLASSES 65/35, 70/36, 80/40, 80/50
5	Low-alloy steel (annealed, normalized, or normalized and tempered. Tensile strength equal to or greater than 85 ksi [585 MPa]).	A 148/A 148M	90-60, 105-85
		A 217/A 217M	C5, C12, C12A, WC11
		A 356/A 356M	9, 10, 12
		A 487/A 487M	1A, 1C, 2A, 2C, 4A, 4C, 6A, 8A, 9A, 9C, 10A, 13A
		A 732/A 732M	6N, 15A
		A 757/A 757M	D1N1, D1N2, D1N3, E2N1, E2N2, E2N3
		A 958	SC 4340, CLASSES 90/60, 105/85
6	Low-alloy steel (quenched and tempered)	A 148/A 148M	90-60, 105-85, 115-95, 130-115, 135-125, 150-135, 160-145, 165-150, 165-150L, 210-180, 210-180L, 260-210, 260-210L
		A 352/A 352M	LC2-1, LC1, LC2, LC3, LC4, LC9
		A 487/A 487M	1B, 1C, 2B, 2C, 4B, 4C, 4D, 4E, 6B, 7A, 8B, 8C, 9A, 9B, 9C, 9D, 9E, 10B, 11B, 12B, 13B, 14A
		A 732/A 732M	7Q, 8Q, 9Q, 10Q, 11Q, 12Q, 13Q, 14Q
		A 757/A 757M	B2Q, B3Q, B4Q, C1Q, D1Q1, D1Q2, D1Q3, E1Q, E2Q1, E2Q2, E2Q3
		A 958	SC 4140, SC 4130, SC 4340, SC 8620, SC 8625, SC 8630, CLASSES 115/95, 130/115, 135/125, 150/135, 160/145, 165/150, 210/180
7	Ferritic stainless steel	A 743/A 743M	CB-30, CC-50
8	Martensitic stainless steel	A 217/A 217M	CA-15
		A 352/A 352M	CA6NM
		A 356/A 356M	CA6NM
		A 487/A 487M	CA15-A, CA15-B, CA15-C, CA15-D, CA15M-A, CA6NM-A, CA6NM-B
		A 743/A 743M	CA-15, CA-15M, CA6NM, CA-40, CA6N, CB6
		A 757/A 757M	E3N
9	Low-carbon austenitic stainless steel (carbon equal to or less than 0.03 %)	A 351/A 351M	CF-3, CF-3A, CF-3M, CF-3MA, CF-3MN, CK-3MCUN, CG3M, CN3MN
		A 743/A 743M	CF-3, CF-3M, CF-3MN, CK-3MCUN, CN-3M, CG3M, CN3MN
		A 744/A 744M	CF-3, CF-3M, CK-3MCUN, CG3M , CN3MN
10	Unstabilized austenitic stainless steel (carbon greater than 0.03 %)	A 351/A 351M	CE-8MN, CF-8, CF-8A, CF-8M, CF-10, CF-10M, CG-8M, CH-8, CH-10, CH-20, CG6MMN,

Copyright ASTM International
Provided by IHS under license with ASTM
No reproduction or networking permitted without license from IHS
Not for Resale

Category Number	Material Description	ASTM Specification	Grades
			CF10S1MNN, CE20N
		A 447/A 447M	Type I
		A 743/A 743M	CF-8, CG-12, CF-20, CF-8M, CF-16F, CF10SMNN, CH-20, CG-8M, CE-30, CG6MMN, CH10, CF16Fa
		A 744/A 744M	CF-8, CF-8M, CG-8M
11	Stabilized austenitic stainless steel	A 351/A 351M	CF-8C, CF-10MC, CK-20, HK-30, HK-40, HT-30, CN-7M, CT-15C
		A 447/A 447M	Type II
		A 743/A 743M	CF-8C, CN-7M, CN-7MS, CK-20
		A 744/A 744M	CF-8C, CN-7M, CN-7MS
12	Duplex (austenitic-ferritic) stainless steel	A 351/A 351M	CD3MWCuN, CD-4MCU
		A 872/A 872M	J93183, J93550
		A 890/A 890M	1A, 1B, 2A, 3A, 4A, 5A, 6A
		A 995/A 995M	1B, 2A, 3A, 4A, 5A, 6A
13	Precipitation-hardened austenitic stainless steel	A 747/A 747M	CB7CU-1, CB7CU-2
14	Nickel-base alloys	A 494/A 494M	CW-12MW, CY-40 Class 1, CY-40 Class 2, CZ-100, M-35-1, M-35-2, M-30C, N-12MV, N-7M, CW-6M, CW-2M, CW-6MC, CX-2MW, CU5MCUC
		A 990	CW2M
15	Steel Castings, Austenitic Manganese	A 128/A 128M	A, B-1, B-2, B-3, B-4, C, D, E-1, E-2, F

A 732/A 732M Specification for Castings, Investment, Carbon and Low Alloy Steel for General Application, and Cobalt Alloy for High Strength at Elevated Temperatures

A 743/A 743M Specification for Castings, Iron-Chromium, Iron-Chromium-Nickel, Corrosion Resistant, for General Application

A 744/A 744M Specification for Castings, Iron-Chromium-Nickel, Corrosion Resistant, for Severe Service

A 747/A 747M Specification for Steel Castings, Stainless, Precipitation Hardening

A 757/A 757M Specification for Steel Castings, Ferritic and Martensitic, for Pressure-Containing and Other Applications, for Low-Temperature Service

A 872/A 872M Specification for Centrifugally Cast Ferritic/Austenitic Stainless Steel Pipe for Corrosive Environments

A 890/A 890M Specification for Castings, Iron-Chromium-Nickel-Molybdenum Corrosion-Resistant, Duplex (Austenitic/Ferritic) for General Application

A 958 Specification for Steel Castings, Carbon and Alloy, with Tensile Requirements, Chemical Requirements Similar to Standard Wrought Grades

A 990 Specification for Castings, Iron-Nickel-Chromium and Nickel Alloys, Specially Controlled for Pressure Retaining Parts for Corrosive Service

A 995/A 995M Specification for Castings, Austenitic-Ferritic (Duplex) Stainless Steel, for Pressure-Containing Parts

2.2 *American Society of Mechanical Engineers:*[3]

ASME Boiler and Pressure Vessel Code, Section IX

2.3 *American Welding Society:*[4]

ANSI/AWS 3.0 Definitions for Welding and Cutting

3. Terminology

3.1 *Definitions*—Definitions of terms relating to welding shall be in agreement with the definitions of the American Welding Society, ANSI/AWS A3.0.

4. Weld Orientation

4.1 *Orientation*—The orientation of welds with respect to horizontal and vertical planes of reference are classified into four positions, namely, flat, horizontal, vertical, and overhead as shown in Fig. 4. Test material shall be oriented as shown in Fig. 4; however, an angular deviation of ±15° from the specified horizontal and vertical planes is permitted during welding.

4.2 *Flat Position* (Fig. 4(*a*))—This position covers plate in a horizontal plane with the weld metal deposited from above, or pipe or a cylindrical casting with its axis horizontal and rolled during welding so that the weld metal is deposited from above.

4.3 *Horizontal Position* (Fig. 4(*b*))—This position covers plate in a vertical plane with the axis of the weld horizontal, or pipe or a cylindrical casting with its axis vertical and the axis of the weld horizontal.

4.4 *Vertical Position* (Fig. 4(*c*))—In this position, the plate is in a vertical plane with the axis of the weld vertical.

4.5 *Overhead Position* (Fig. 4(*d*))—In this position, the plate is in a horizontal plane with the weld metal deposited from underneath.

4.6 *Horizontal Fixed Position* (Fig. 4(*e*))—In this position, the pipe or cylindrical casting has its axis horizontal and the

[3] Available from American Society of Mechanical Engineers (ASME), ASME International Headquarters, Three Park Ave., New York, NY 10016-5990, http://www.asme.org.

[4] Available from American Welding Society (AWS), 550 NW LeJeune Rd., Miami, FL 33126, http://www.aws.org.

Copyright ASTM International
Provided by IHS under license with ASTM
No reproduction or networking permitted without license from IHS
Not for Resale

RECOMMENDED FORM FOR MANUFACTURER'S RECORD OF WELDING PROCEDURE QUALIFICATION TESTS

Procedure No. _____ Date: _____ Welding Process: _____
Material Specification: _____ to _____ of category No. _____ to category No. _____
Plate Thickness: _____ Thickness Range Qualified _____
Filler Metal F Group No. _____ Weld Deposit A-Group No.: _____
Flux Designation: _____ Gas Composition: _____
Gas Flow Rate: _____ Backing Strip, if any: _____
Preheat Temperature Range: _____ Single or Multiple Pass: _____
Position of Groove: _____ Filler Wire Diameter: _____
Trade Name: _____ Type of Backing: _____
Forehand or Backhand: _____Amps: _____ Volts _____ Inches/min: _____
Postheat Temperature _____ Time at Temperature _____

TENSION TEST RESULTS

Specimen No.	Width	Dimensions Thickness	Area	Ultimate Total Load, lb	Ultimate Unit Stress, psi	Nature of Failure and Location

GUIDED BEND TEST RESULTS

Specimen No.	Results	Specimen No.	Results

Welder's Name: _____ Clock No. _____ Stamp. No. _____
Who by virtue of these tests meets the welder performance qualification.
Test Conducted By: _____ Test No. _____
per _____
We certify that the statements in this record are correct and that the test welds were prepared, welded, and tested in accordance with the requirements of ASTM Standard _____
Signed: _____
Manufacturer or Contractor
Date: _____

FIG. 1 Report Form 1

Copyright ASTM International
Provided by IHS under license with ASTM
No reproduction or networking permitted without license from IHS
Not for Resale

RECOMMENDED FORM FOR MANUFACTURER'S OR CONTRACTOR'S RECORD OF WELDER OR OPERATOR PERFORMANCE QUALIFICATION TESTS

Welder or Operator's Name: Stamp No. _____
Clock No. _____ Welding Process: _____
Position: _____
In accordance with Procedure No. _____
Material Specification: _____ to _____ of category No. _____ to category No. _____
Plate Thickness: _____ Range of Thickness Qualified: _____
Filler Metal Specification No. _____ Group No. F. _____
Filler Metal A-Group No. _____ Filler Metal Diameter _____
Trade Name: _____ Flux Designation or Gas Analysis: _____
Was Backing Strip Used? _____

GUIDED BEND TEST RESULTS

Specimen No.	Results	Specimen No.	Results

Test Conducted By: _____ Laboratory Test No. _____
per _____
We certify that the statements in this record are correct and that the test welds were prepared, welded, and tested in accordance with ASTM Standard _____ .
Signed: _____
Manufacturer or Contractor
Date: _____

FIG. 2 Report Form 2

Copyright ASTM International
Provided by IHS under license with ASTM
No reproduction or networking permitted without license from IHS
Not for Resale

REPORT FORM 3

RECOMMENDED FORM FOR WELDING PROCEDURE SPECIFICATION

1. Title

Welding of[A]_____ steel castings.

[A] Indicate general material description, such as carbon, Cr-Mo, 12 Cr, etc.

2. Specification No. _____ Rev. _____
Date _____

3. Scope

3.1 Procedure Specification No. _____ covers the welding of[A]_____ steel castings using the[B]_____ welding process.

[A] Indicate general material description in the Title.

[B] Indicate specific welding process, such as shielded metal arc, etc.

4. Base Material

4.1 The base material shall conform to the specification for[A]_____ which is found in materials category number[B]_____.

[A] Insert reference to ASTM designation or indicate chemical analysis and physical properties.

[B] Indicate category number from Table 1.

4.2 Base material shall be in the[A]_____ heat treated condition before welding.

[A] Indicate heat treatment before welding.

5. Filler Metal

5.1 The filler metal shall conform to ANSI/AWS Specification[A]_____ which is found in weld metal analysis group A _____[B].

[A] Indicate appropriate American Welding Society specification number and filler metal classification (e.g., A5.1 E7018).

[B] Indicate A Number from Table 4.

5.2 Flux for submerged arc welding shall conform to the following nominal composition:[A]_____.

[A] Indicate chemical composition or trade designation.

5.3 Shielding gas for gas shielded arc welding shall conform to the following nominal composition:[A]_____.

[A] Indicate the single gas or proportional parts of mixed gases and flow rates.

6. Preparation of Base Material

6.1 Metal removal shall be performed by[A]_____.

[A] Indicate method of metal removal, such as chipping, grinding, carbon arc cutting, frame cutting, etc. Also indicate whether preheat is required during metal removal.

6.2 Configuration of the weld preparation for partial penetration welds shall conform to the following geometry:[A]_____.

[A] Indicate minimum root radius and minimum side wall angle.

6.3 Configuration of the weld preparation for full penetration welds shall conform to the following geometry:[A]_____.

[A] Indicate minimum side wall angle.

6.4 Backing plates shall be used for welding full penetration welds. Backing plates shall be made from[A]_____ steel and shall fit the back of the cavity with a minimum gap of[B]_____.

[A] Indicate material of backing plate.

[B] Indicate dimension of maximum gap.

6.5 Surfaces of the weld preparation shall be cleaned of all oil, grease, dirt, scale, slag, shot blasting grit, or any foreign material which may be harmful to the quality of the weld. Surfaces of backing plates when used shall also meet the same cleanliness requirements.

6.6 All surfaces of the weld preparation shall be inspected as follows:[A]_____.

[A] Indicate type of inspection.

7. Preheat

7.1 Preheat and interpass temperature shall be maintained in the range from[A]_____ to[B]_____ during _____[C].

[A] Indicate minimum temperature.

[B] Indicate maximum temperature.

[C] Indicate if preheat maintenance is during welding or until postweld heat treatment is performed.

7.2 Preheat for tack welding of backing plates is the same as required for welding.

7.3 Minimum temperature before applying heat shall be[A]_____.

[A] Indicate temperature.

7.4 Local preheating to the temperatures indicated may be performed so that the heated area completely surrounds the weld preparation for a minimum distance of[A]_____ in any direction.

[A] Indicate minimum distance for local preheating.

8. Welding Position

8.1 Welds shall be made in the[A]_____ position.

[A] Indicate position or positions in which the welding will be performed. See Fig. 4.

9. Electrical Characteristics

9.1 The current used shall be _____[A]. The base material shall be attached to the _____[B] welding electrode lead.

[A] Indicate whether direct or alternating current. If direct, state whether non-pulsed or pulsed. If pulsed, state frequency.

[B] Indicate whether electrode positive (EP) or electrode negative (EN) output terminal of power supply is used.

Electrode Wire Diameter[A]	Amperage[A]	Range[A]	Voltage[A]
_____	_____	_____	_____
_____	_____	_____	_____
_____	_____	_____	_____

[A] Indicate for each diameter of electrode, the amperage, the range of amperage permitted, and the voltage requirements. For welding processes using wire, indicate wire diameter, wire feed speed, and current requirements.

9.2 Electrodes subject to moisture absorption must be stored and handled to maintain dryness according to the following:[A]_____.

[A] Where applicable, indicate electrode care instructions.

10. Welding Details

10.1 The width of any pass of welding shall not exceed[A]_____ times the size of the filler metal used.

[A] Indicate the number for controlling the maximum width.

10.2 Craters shall be properly filled before each interruption of the arc.

10.3 Slag or flux shall be removed on any bead before depositing the next successive bead.

10.4 Interpass inspection shall be performed according to the following:[A]_____.

[A] Indicate degree of interpass inspection required.

10.5 Peening shall be performed according to the following:[A]_____.

[A] Indicate the degree of peening required. Indicate any limits on peening first and last layers.

11. Post-Weld Heat Treatment

11.1 Post-weld heat treatment shall consist of the following:[A]_____.

[A] Indicate the heating and cooking rates, holding temperatures and times.

12. Inspection

12.1 Inspection of the completed weld shall be performed according to the following:[A]_____.

[A] Indicate degree of inspection.

FIG. 3 Report Form 3

Copyright ASTM International
Provided by IHS under license with ASTM
No reproduction or networking permitted without license from IHS
Not for Resale

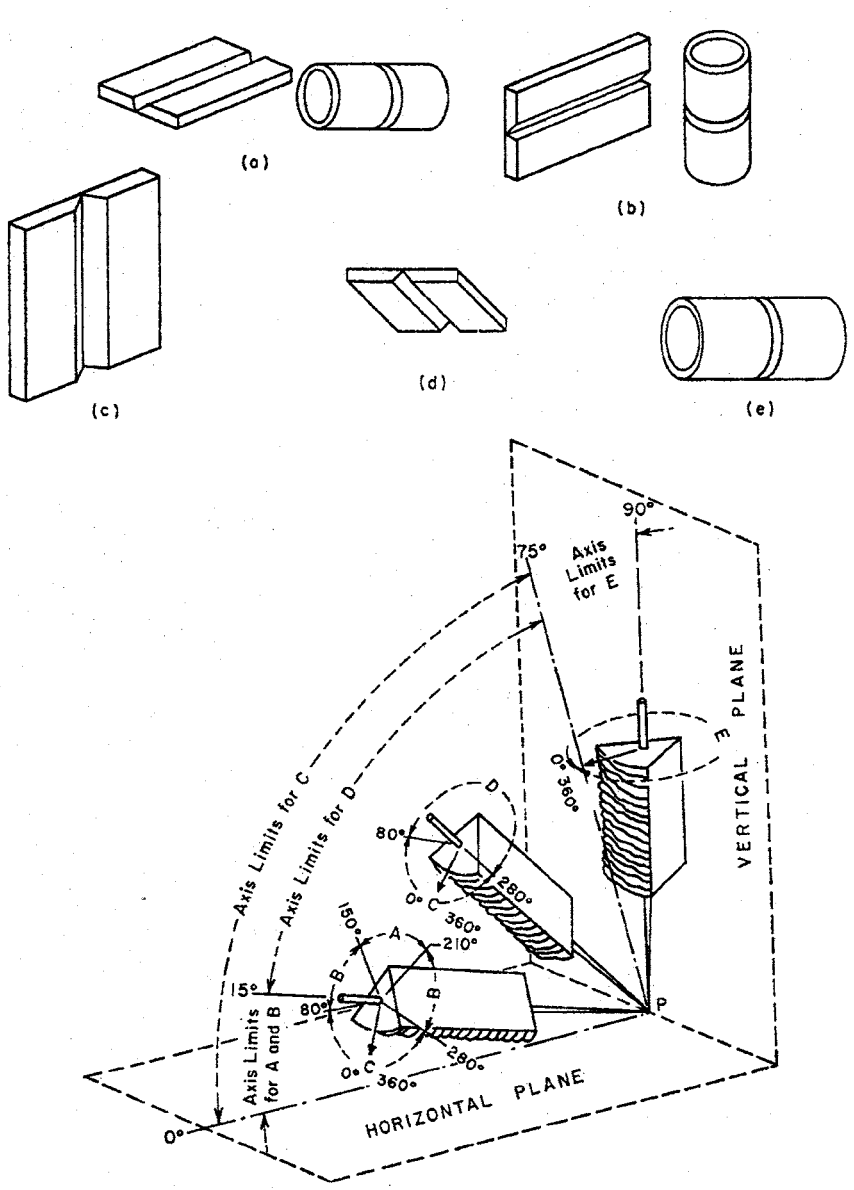

Tabulation of Positions of Groove Welds

Position	Diagram Reference	Inclination of Axis, °	Rotation of Face,°
Flat	A	0 to 15	150 to 210
Horizontal	B	0 to 15	80 to 150 210 to 280
Overhead	C	0 to 80	0 to 80 280 to 360
Vertical	D	15 to 80	80 to 280
	E	80 to 90	0 to 360

NOTE 1—(*a*) Flat Position; (*b*) Horizontal Position; (*c*) Vertical Position; (*d*) Overhead Position; (*e*) Horizontal Fixed Position

FIG. 4 Orientation of Welds

Copyright ASTM International
Provided by IHS under license with ASTM
No reproduction or networking permitted without license from IHS
Not for Resale

TABLE 2 Type and Number of Test Specimens and Range of Thicknesses Qualified—(Procedure)

Thickness, *t*, of Test Plate or Pipe as Welded, in. [mm]	Range of Thicknesses Qualified[A]		Type and Number of Tests Required[B]			
	min, in. [mm]	max	Reduced Section Tension	Side Bend	Face Bend	Root Bend
1/16 to 3/8 [1.6 to 9.5], incl	1/16 [1.6]	2*t*[C]	2	. . .	2	2
Over 3/8 [9.5], under 3/4 [19.0]	3/16 [4.8]	2*t*	2	. . .	2	2
3/4 [19.0] to under 1 1/2 [38.1]	3/16 [4.8]	2*t*	2	4	. . .	. . .
1 1/2 [38.1] and over	3/16 [4.8]	8 [203]	2	4	. . .	. . .

[A] For repair welding, the minimum thickness requirements do not apply.
[B] Either the face- and root-bend tests or the side-bend tests may be used for thicknesses from 3/8 to 3/4 in. [9.5 to 19.0 mm].
[C] The maximum thickness qualified with pipe smaller than 5 in. [127 mm] is two times the thickness of the pipe but not more than 3/4 in. [19.0 mm].

welding groove in a vertical plane. Welding shall be done without rotating the pipe or casting so that the weld metal is deposited from the flat, vertical, and overhead position.

4.7 *Qualification*—Qualification in the horizontal, vertical, or overhead position shall qualify also for the flat position. Qualification in the horizontal fixed position, or in the horizontal and vertical and overhead positions, shall qualify for all positions (Fig. 4(*f*)).

5. Preparation of Test Plate

5.1 Procedure qualification testing shall be performed on cast or wrought material having the same category number as the casting being welded. Test material shall be subjected to the same heat treatment before and after welding as will be applied to the casting. If the castings are not to be postweld heat treated, then the test material is not to be postweld heat treated. Test plate material for performance qualification testing is covered in 12.2.

5.2 The dimensions of the test plate shall be such as to provide the required number of test specimens.

5.3 The test joint shall be welded using the type of welding groove proposed in the welding procedure. The dimensions of the welding groove are not essential variables of the welding procedure.

5.4 The thickness of the test plate shall depend on the range of thickness to be qualified as shown in Table 2 and Table 3.

5.5 The joint preparation shown in Fig. 5 shall qualify the supplier for all welding on steel castings.

5.6 Where pipe or a cylindrical casting is used for qualification, it is recommended that a minimum nominal diameter of 5 in. [125 mm] and a minimum thickness of 3/8 in. [10 mm] be used.

6. Types of Tests

6.1 Four types of tests are used in the qualification procedure as follows:

6.1.1 *Tension Test*—Tests in direct tension are used in the procedure qualification to measure the strength of groove-weld joints.

6.1.2 *Bend Test*—Guided bend tests are used in the procedure and performance qualification tests to check the degree of soundness and ductility of groove-weld joints.

6.1.3 *Charpy Impact Test*—Charpy V-notch impact test specimens are used in the procedure qualification to determine the impact strength of weld metal deposited in groove-type joints.

6.1.4 *Radiographic Test*—Radiographic examination in accordance with 12.6 of a length of weld may be used to prove the ability of operators and welders to make sound welds.

7. Tension Test

7.1 *Specimens*—Tension tests shall be in accordance with the requirements of 7.1.1 or 7.1.2.

7.1.1 All thicknesses of plate may be tested using reduced-section specimens in accordance with the requirements of Fig. 6. All thicknesses of pipe or cylindrical castings having an outside diameter greater than 3 in. [75 mm] may be tested using reduced-section specimens in accordance with the requirements of Fig. 7.

7.1.1.1 A single specimen of full-plate or full-pipe thickness shall be used for thicknesses up to and including 1 in. [25 mm].

7.1.1.2 For plate or pipe thicknesses greater than 1 in. [25 mm], single or multiple specimens may be used.

7.1.1.3 When multiple specimens are used, each set shall represent a single required tension test. Collectively, all of the specimens required to represent the full thickness of the weld at one location shall comprise a set.

7.1.1.4 When multiple specimens are necessary, the entire thickness shall be mechanically cut into a minimum number of approximately equal strips of a size that can be tested in the available equipment. Each specimen shall be tested and meet the requirements of 7.1.4.

7.1.2 Turned specimens in accordance with the requirements of Fig. 8 may be used for tension tests.

7.1.2.1 For thicknesses up to and including 1 in. [25 mm], a single-turned specimen may be used, which shall be a specimen of the largest diameter possible for the test coupon thickness.

7.1.2.2 For thicknesses greater than 1 in. [25 mm], multiple specimens shall be cut through the full thickness of the weld with their centers parallel to the metal surface and not over 1 in. [25 mm] apart. The centers of the specimens adjacent to the metal surfaces shall not exceed 5/8 in. [16 mm] from the surface.

7.1.2.3 When multiple specimens are used, each set shall represent a single required tension test. Collectively, all of the specimens required to represent the full thickness of the weld at one location shall comprise a set. Each specimen shall be tested and meet the requirements of 7.1.4.

7.1.3 The weld shall be in the center of the reduced section.

7.1.4 In order to meet the requirements of the tension test, specimens shall have a tensile strength not less than the

Copyright ASTM International
Provided by IHS under license with ASTM
No reproduction or networking permitted without license from IHS
Not for Resale

TABLE 3 Type and Number of Test Specimens and Thickness Limits Qualified—(Performance)

Thickness, *t*, of Test Plate or Pipe as Welded, in. [mm]	Thickness Qualified	Type and Number of Tests Required[A]		
		Side Bend	Face Bend	Root Bend
Up to ⅜ [9.5], incl	2*t*	. . .	1	1
Over ⅜ [9.5], under ¾ [19.0][B]	2*t*	. . .	1	1
Over ⅜ [9.5], under ¾ [19.0][B]	2*t*	2	. . .	. . .
¾ [19.0], and over	max to be welded	2	. . .	. . .

[A] A total of four specimens are required to qualify for Position 1(e) of Fig. 4. Refer to Fig. 17 and Fig. 18.
[B] Either the face- and root-bend tests or the side-bend tests may be used for thicknesses from ⅜ to ¾ in. [9.5 to 19.0 mm].

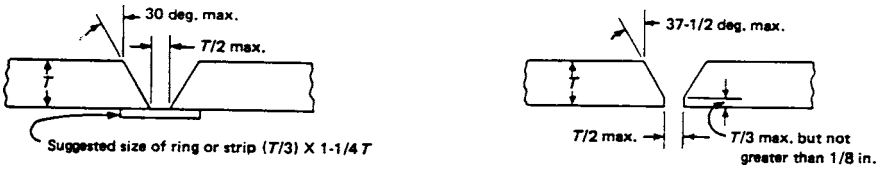

FIG. 5 Joint Preparation

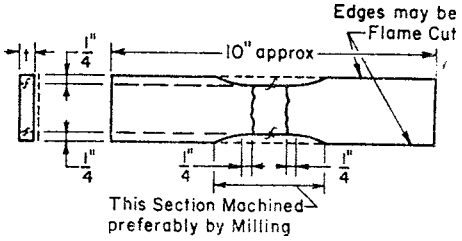

Metric Equivalents			
in.	¼		10
[mm]	[6]		[255]

FIG. 6 Reduced-Section Tension Specimen for Plate

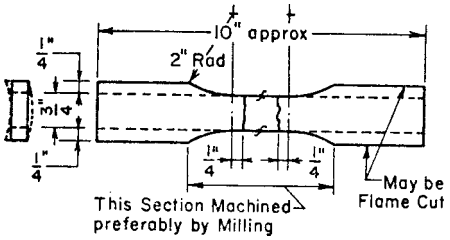

Metric Equivalents				
in.	¼	¾	2	10
[mm]	[6]	[20]	[50]	[255]

FIG. 7 Reduced-Section Tension Specimen for Pipe

specified tensile strength of the base material. If the specimen breaks in the base metal outside of the weld or fusion line, the test shall be accepted as meeting the requirements, provided the strength is not more than 5 % below the specified minimum tensile strength of the base metal.

7.2 *Tension Test*—Tension tests shall be conducted in accordance with Test Methods and Definitions A 370.

8. Guided Bend Test

8.1 *Specimens*—Guided bend test specimens shall be prepared by cutting the test plate or pipe to form specimens of approximately rectangular cross section. The cut surfaces shall be designated the sides of the specimen. The other two surfaces

NOTE 1—Reduced section *A* should not be less than width of weld plus 20.

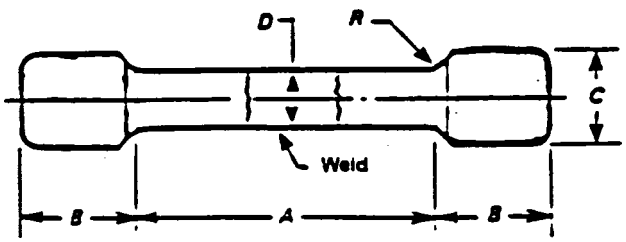

	Standard Dimensions, in.			
	(a) 0.505 Specimen[A]	(b) 0.353 Specimen[B]	(c) 0.252 Specimen[C]	(d) 0.188 Specimen[D]
A—Length of reduced section	[Note]	[Note]	[Note]	[Note]
D—Diameter	0.500 ± 0.010	0.350 ± 0.007	0.250 ± 0.005	0.188 ± 0.003
R—Radius of fillet	⅜, min	¼, min	3⁄16, min	⅛, min
B—Length of end section	1⅜, approx.	1⅛, approx.	⅞, approx.	½, approx.
C—Diameter of endsection	¾	½	⅜	¼

[A] Use maximum diameter specimen (a), (b), (c), or (d) that can be cut from the section.
[B] Weld should be in center of reduced section.
[C] Where only a single coupon is required, the center of the specimen should be midway between the surfaces.
[D] The ends may be threaded or shaped to fit the holders of the testing machine in such a way that the load is applied axially.

FIG. 8 Alternate Reduced-Section Tension Specimen

shall be called the face and root surfaces, the face surface having the greater width of weld. Guided bend test specimens are of three types depending on which surface (side, face, or root) is on the convex (outer) side of the bent specimen. (Fig. 9 and Fig. 10.)

8.1.1 *Side Bend*—The weld is transverse to the longitudinal axis of the specimen, which is bent so that one of the side surfaces becomes the convex surface of the bent specimen.

8.1.2 *Face Bend*—The weld is transverse to the longitudinal axis of the specimen, which is bent so that the face surface becomes the convex side of the bent specimen.

--`,,```,,,,````-`-`,,`,,`,`,,`---

Copyright ASTM International
Provided by IHS under license with ASTM
No reproduction or networking permitted without license from IHS
Not for Resale

NOTE 1—For plates over 1½ in. [38.1 mm] thick, cut specimen into approximately equal strips between ¾ in. [20 mm] and 1½ in. [40 mm] wide and test each strip.

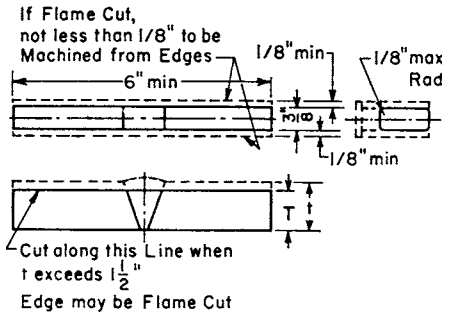

Metric Equivalents

in.	⅛	⅜	1½	6
[mm]	[3]	[10]	[40]	[155]

FIG. 9 Side-Bend Specimen

8.1.3 *Root Bend*—The weld is transverse to the longitudinal axis of the specimen, which is bent so that the root surface becomes the convex side of the bent specimen.

8.2 *Guided Bend Tests*—Table 2 and Table 3 give the number and type of guided bend specimens that are to be used in the procedure and performance qualification tests.

8.2.1 Specimens of base metal thicknesses over 1.5 in. [38 mm] may be cut into approximately equal strips between ¾ in. [19 mm] and 1.5 in. [38 mm] wide for testing, or the specimens may be bent at full width. If multiple specimens are used, one complete set shall be made for each required test. Each specimen shall be tested and meet the requirements of 8.2.3.

8.2.2 Guided bend specimens shall be bent in jigs that are in substantial accordance with Figs. 11-13. The side of the specimen turned toward the gap of the jig shall be the face for face-bend specimens, the root for root-bend specimens, and the side with the greater number of defects, if any, for side-bend specimens. The specimen shall be forced into the die by applying load on the plunger until the curvature of the specimen is such that a ⅛-in. [3.2-mm] diameter wire cannot be inserted between the die and the specimen, or so that the specimen is bottom ejected if the alternate roller type jig is used. When using the wrap-around jig (Fig. 13), the side of the specimen turned toward the roller shall be the face for face-bend specimens, the root for root-bend specimens, and the side with the greater defects, if any, for side-bend specimens. When specimens wider than 1.5 in. [38.1 mm] are to be bent, the test jig mandrel must be at least 0.25 in. [6.4 mm] wider than the specimen width.

8.2.3 In order to meet the requirements of this test, the guided bend specimens shall have no cracks or other open defects exceeding ⅛ in. [3.2 mm] measured in any direction on the convex surface of the specimen after bending. However, cracks occurring on the corners of the specimen during testing shall not be considered unless there is definite evidence that they result from slag inclusions or other internal defects.

8.2.4 Where the ductility of the parent metal is such as to render it incapable of meeting the bend test requirements of 8.2.2 and 8.2.3, the bend test shall be conducted in the following manner: A bend bar comprised of parent metal heat treated to the ductility and strength requirements of the applicable specification shall be bent to failure. The side-bend specimen shall then be capable of being bent to within 5° of the angle thus determined.

9. Charpy Impact Test

9.1 *Application*—Charpy V-notch impact tests of the weld metal and heat-affected zone shall be made when such tests are required for the parent metal by the material specification, or specified by the purchaser, and shall apply to the qualification of the welding procedure for fabrication and repair. When postweld heat treatment consists of a full reheat treatment of the welded part, thus eliminating the HAZ, impact testing of the HAZ shall not be required.

9.2 *Test Methods*—Test methods for Charpy V-notch impact tests shall be in accordance with Test Methods and Definitions A 370 and conducted at the same temperature as required for the parent metal.

9.2.1 *Test Specimens*—Each set of three weld metal impact specimens shall be taken across the weld with the notch in the weld metal. Each specimen shall be oriented so that the notch is normal to the surface of the material and one face of the specimen shall be within 1/16 in. [1.6 mm] of the surface of the metal. Heat-affected zone coupons for impact specimens shall be taken transverse to the weld and etched to define the heat-affected zone. The notch shall be cut normal to the material surface in the heat-affected zone to include as much heat-affected zone as possible in the resulting fracture (Fig. 14(*a*)). Where the material thickness permits, the axis of a heat-affected zone specimen may be inclined to allow the root of the notch to align parallel to the fusion line (Fig. 14(*b*)).

9.2.2 *Acceptance Criteria*—Acceptance criteria for the weld metal and heat-affected zone shall be the same as that required by the material specification for the parent metal.

10. Procedure Qualification

10.1 Each manufacturer or contractor shall record in detail the welding procedure used in qualifying under this practice. A suggested form (Fig. 1) is included with this practice.

10.2 The number of tests required to qualify a procedure for various thickness ranges shall be as shown in Table 2, except only bend tests are required for Category 15 material.

10.3 Test specimens shall be removed from the plate or pipe or cylindrical casting as shown in Figs. 15-18.

10.4 In order to qualify, test specimens shall meet the requirements of 7.1.4, 8.2.3, or 8.2.4.

11. Requalification of a Procedure

11.1 A welding procedure must be set up as a new procedure and must be requalified when any of the changes in essential variables listed in 11.1.1-11.1.12, inclusive, are made. Changes other than those listed may be made without requalification, provided the procedure is revised to show these changes.

11.1.1 A change from a base material listed under one category number in Table 1 to a material listed under another category number. When two base materials having different category numbers are welded together, a procedure qualification must be performed for the combination.

Copyright ASTM International
Provided by IHS under license with ASTM
No reproduction or networking permitted without license from IHS
Not for Resale

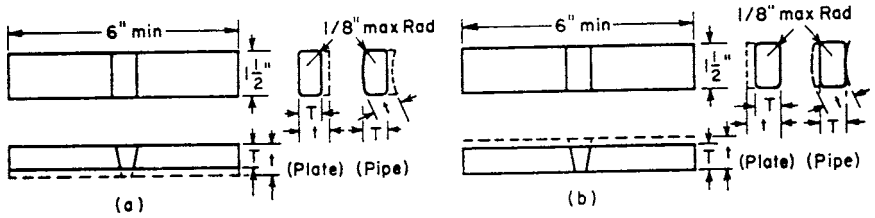

Metric Equivalents

in. [mm]	⅛ [3]	1½ [40]	6 [155]

(*a*) Transverse Face-Bend Specimen—Plate and Pipe

t, in. [mm]	*T*, in. [mm] (all Ferrous Materials)
1/16 to ⅛ [1.6 to 3.2]	*t*
⅛ to ⅜ [3.2 to 9.5]	*t*
> ⅜ [9.5]	⅜ [9.5]

Metric Equivalents

in. [mm]	⅛ [3]	1½ [40]	6 [155]

(*b*) Transverse Root-Bend Specimen—Plate and Pipe

Note—Weld reinforcement and backing strip or backing ring, if any, shall be removed flush with the surface of the specimen. If a recessed ring is used, this surface of the specimen may be machined to a depth not exceeding the depth of the recess to remove the ring, except that in such cases the thickness of the finished specimen shall be that specified above.

FIG. 10 Transverse Face- and Root-Bend Specimens, for Pipe and Plate

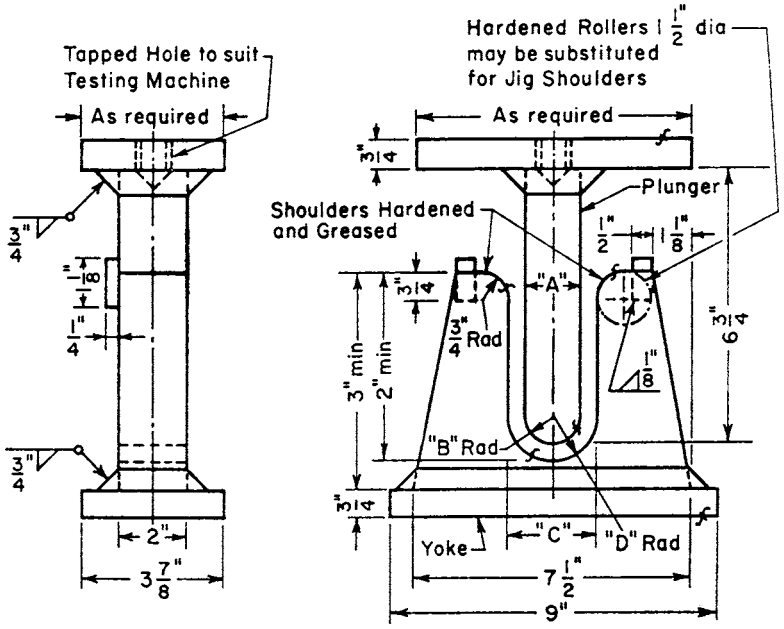

Metric Equivalents

in.	⅛	¼	½	¾	1⅛	1½	2	3	3⅞	6¾	7½	9
[mm]	[3]	[5]	[15]	[20]	[30]	[40]	[50]	[75]	[100]	[170]	[190]	[230]

Specimen Thickness, in. [mm]	*A*, in. [mm]	*B*, in. [mm]	*C*, in. [mm]	*D*, in. [mm]
⅜ [9.5]	1½ [38.1]	¾ [19.0]	2⅜ [60.3]	1 3/16 [30.2]
t	4*t*	2*t*	6*t* + ⅛ [3.2]	3*t* + 1/16 [1.6]

FIG. 11 Guided-Bend Test Jig

11.1.2 A change in the weld-deposit analysis or electrode type will require requalification under any of the following conditions:

11.1.2.1 A change from one A number in Table 4 to any other A number. Qualification with A No. 1 shall qualify for A No. 2 and vice versa. In lieu of an A number designation, the nominal chemical composition of the weld deposit shall be indicated on the Welding Material Specification (Fig. 3). Designation of nominal chemical composition may also be by reference to the AWS classification (where such exists), the manufacturer's trade designation, or other established procurement documents.

11.1.2.2 A change from one F number in Table 5 to any other F number.

Copyright ASTM International
Provided by IHS under license with ASTM
No reproduction or networking permitted without license from IHS
Not for Resale

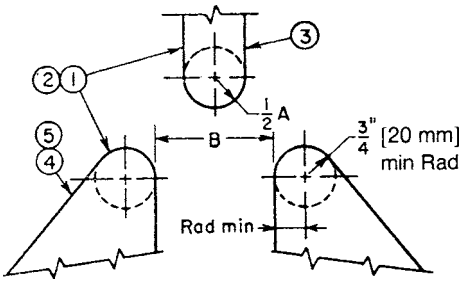

FIG. 12 Alternative Roller-Equipped Guided-Bend Test Jig

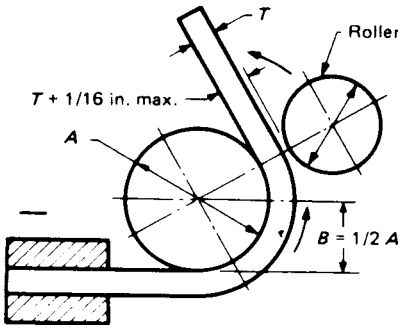

FIG. 13 Guided Bend Wrap-Around Jig

11.1.3 A decrease of 100°F [55°C] or more in the minimum specified preheat temperature.

11.1.4 A significant change in the post heat-treating temperature or time cycle.

11.1.5 A change in the method of backing up, or its omission if previously used.

11.1.6 A change in the welding process.

11.1.7 In submerged arc welding, where the alloy content of the weld metal is largely dependent upon the composition of the flux used, any change in any part of the welding procedure that would result in the important alloying elements in the weld metal being outside of the specification range of chemistry given in the welding procedure specification.

11.1.8 In submerged arc welding, a change in the nominal composition or type of flux used (requalification is not required for a change in flux particle size).

11.1.9 For submerged arc welding, a change from a filler metal containing 1.75 to 2.25 % manganese to filler metal containing less than 1.00 % manganese or vice versa shall require requalification. The presence or absence of up to 0.5 % molybdenum in the filler metal analysis shall not require requalification.

11.1.10 For submerged arc welding, a change in filler metal analysis in Table 4 from one A number to another.

11.1.11 In gas metal arc welding and gas tungsten arc welding.

11.1.11.1 A change from the qualified single gas to any other single gas or to a mixture of gases, or a change in specified percentage composition of gas mixture.

11.1.11.2 A decrease of 10 % or more in the rate of flow of shielding gas or mixture.

11.1.12 For gas metal arc welding, a change in the consumable electrode from bare (solid) to flux cored, or vice versa.

11.1.13 Qualification of Category 10 base materials shall also qualify Category 9 base materials, and vice versa. Separate welding procedures are required for each category.

12. Performance Qualification of Welders or Operators

12.1 All welders and operators welding castings under this practice shall pass the welder qualification test. The welder or operator successfully performing the procedure qualification test is automatically qualified for performance.

12.1.1 Each welder or operator shall be qualified for each welding process (GTAW, GMAW, SMAW, FCAW, and so forth) he uses. The welder or operator successfully qualified with one procedure for a process is qualified to weld with any other welding procedure using the same welding process, unless requalification is required by Section 13.

12.2 *Test Plate*—The test plate or pipe or cylindrical casting shall be the same as that used in the procedure qualification with respect to groove dimensions, filler metal, and so forth. Groove dimensions as shown in Fig. 5 may be used. The welding procedure shall be in accordance with that given in the procedure qualification. For performance qualification, carbon steel plate, pipe, or cylindrical castings may be used for qualification of materials having a total alloy content of less than 6 %.

12.3 *Number of Tests*—The number and type of tests to qualify a performance shall be as shown in Table 3.

12.4 Test specimens shall be removed from the plate or pipe or cylindrical casting as shown in Figs. 15-18.

12.5 The guided bend test shall meet the requirements as specified in 8.2.3.

12.6 Alternative to the mechanical tests required in 12.3-12.5, the qualification test plate for welders and operators making groove welds using SMAW, GTAW, FCAW, or GMAW (except the short circuiting mode of transfer) processes may be examined by radiography using a technique shown by penetrameters to equal or exceed 2 % sensitivity. The weld to be radiographed shall be at least 6 in. [150 mm] long for welders and operators, or alternatively, a 3-ft [0.9-m] length of the first production weld made by a welding operator may be examined by radiography.

12.6.1 Final acceptance of the welds shall be based on the radiographic requirements of Section IX of the ASME Boiler and Pressure Vessel Code.

12.6.2 If a production weld is selected for welder or operator qualification and it does not meet the radiographic standards, the welder or operator has failed the test. In the event the production weld requires welder or operator qualification, the entire production weld made by that welder or operator shall be radiographed and repaired by a qualified welder or operator. Alternatively, the entire weld shall be removed and replaced by a qualified welder or operator.

12.7 Each manufacturer or contractor shall maintain a record of the procedures, including essential variables, under which the welders and operators are examined. A suggested form for recording such information is shown in Fig. 2.

Copyright ASTM International
Provided by IHS under license with ASTM
No reproduction or networking permitted without license from IHS
Not for Resale

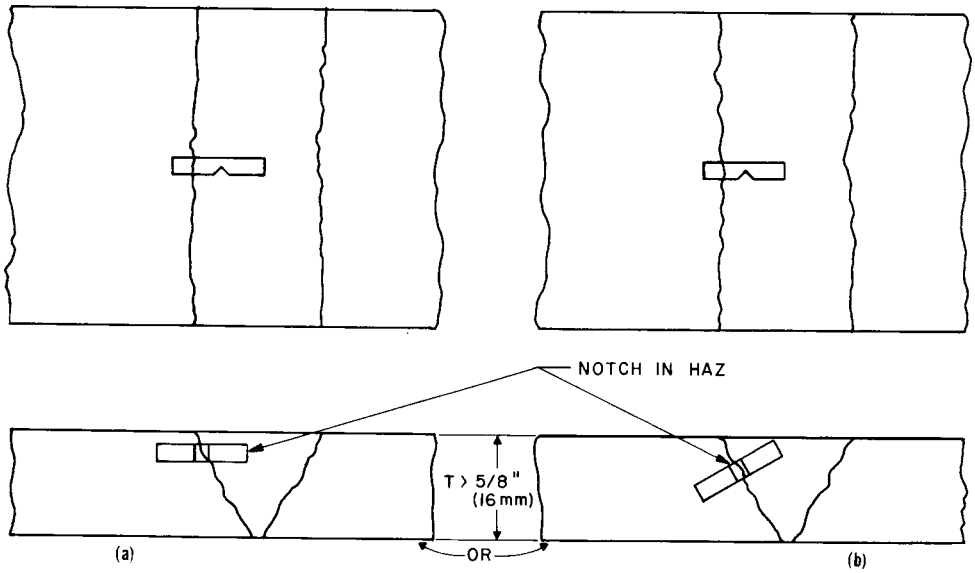

FIG. 14 Location of Notch in Charpy Specimens Shall Be In HAZ Midway Between Center and Surface

TABLE 4 A Numbers—Classification of Weld Metal Analysis for Procedure Qualification

A No.	Types of Weld Deposit	Analysis[A]					
		C, %	Cr, %	MO, %	Ni, %	Mn, %	Si, %
1	Mild steel	0.15				1.60	1.00
2	Carbon-molybdenum	0.15	0.50	0.40 to 0.65		1.60	1.00
3	Chromium (0.4 to 2 %)—molybdenum	0.15	0.40 to 2.00	0.40 to 0.65		1.60	1.00
4	Chromium (2 to 6 %)—molybdenum	0.15	2.00 to 6.00	0.40 to 1.50		1.60	2.00
5	Chromium (6 to 10.5 %)—molybdenum	0.15	6.00 to 10.50	0.40 to 1.50		1.20	2.00
6	Chromium-martensitic	0.15	11.00 to 15.00	0.70		2.00	1.00
7	Chromium-ferritic	0.15	11.00 to 30.00	1.00		1.00	3.00
8	Chromium-nickel	0.15	14.50 to 30.00	4.00	7.50 to 15.00	2.50	1.00
9	Chromium-nickel	0.30	25.00 to 30.00	4.00	15.00 to 37.00	2.50	1.00
10	Nickel to 4 %	0.15		0.55	0.80 to 4.00	1.70	1.00
11	Manganese-molybdenum	0.17		0.25 to 0.75	0.85	1.25 to 2.25	1.00
12	Nickel-chromium-molybdenum	0.15	1.50	0.25 to 0.80	1.25 to 2.80	0.75 to 2.25	1.00

[A] Single values shown above are maximum.

13. Requalification of Welders and Operators

13.1 A welder must be requalified when one of the changes in essential variables listed in 13.2 and 13.3 is made in the procedure, or as provided in 13.4 or 13.5.

13.2 A change in the weld deposit metal to a weld deposit metal having a different F number, or to a weld deposit metal not covered under Table 4. Qualification under any F number up to and including F4 shall qualify a welder for all lower F numbers.

13.3 A change in the method of backing up, or its omission if previously used.

13.4 When a welder has not used the specified process for three months or more.

13.5 When there is a reason to question his ability to make welds that meet this practice.

13.6 Requalification under 13.4 or 13.5 need only be made in a single thickness.

14. Retests

14.1 A welder or operator who fails to meet the requirements for one or more test specimens may be retested under the conditions described in 14.2 and 14.3.

14.2 When an immediate retest is made, the welder or operator shall make two test plates, each of which shall meet the requirements. If he fails these tests, he must undergo further training before a retest is permitted.

14.3 When a welder has had further training, a single retest is permitted.

15. Keywords

15.1 qualifications; steel castings; welding

Copyright ASTM International
Provided by IHS under license with ASTM
No reproduction or networking permitted without license from IHS
Not for Resale

TABLE 5 F Numbers—Grouping of Filler Metals for Qualification

F No.	ANSI/AWS Specification	ANSI/AWS Classification
1	SFA-5.1 & 5.5	EXX20, EXX22, EXX24, EXX27, EXX28
1	SFA-5.4	EXX25, EXX26
2	SFA-5.1 & 5.5	EXX12, EXX13, EXX14, EXX19
3	SFA-5.1 & 5.5	EXX10, EXX11
4	SFA-5.1 & 5.5	EXX15, EXX16, EXX18, EXX48
4	SFA-5.4 (other than austenitic and duplex)	EXX15, EXX16, EXX17
5	SFA-5.4 (austenitic and duplex)	EXX-15, EXX-16, EXX-17
6	SFA-5.2	RX
6	SFA-5.17	FXX-EXX, FXX-ECX
6	SFA-5.9	ERXX, ECXX, EQXX
6	SFA-5.18	ERXXS-X, EXXC-X, EXXC-XX
6	SFA-5.20	EXXT-X
6	SFA-5.22	EXXXT-X
6	SFA-5.23	FXX-EXXX-X, FXX-ECXXX-X, FXX-EXXX-XN, FXX-ECXXX-XN
6	SFA-5.25	FESXX-EXXXXX-EW
6	SFA-5.26	EGXXS-X, EGXXT-X
6	SFA-5.28	ERXXS-X, EXXC-X
6	SFA-5.29	EXXTX-X
6	SFA-5.30	INXXXX
41	SFA-5.11	ENi-1
41	SFA-5.14	ERNi-1
41	SFA-5.30	IN61
42	SFA-5.11	ENiCu-7
42	SFA-5.14	ERNiCu-7
42	SFA-5.14	ERNiCu-8
42	SFA-5.30	IN60
43	SFA-5.11	ENiCrFe-1
43	SFA-5.11	ENiCrFe-2
43	SFA-5.11	ENiCrFe-3
43	SFA-5.11	ENiCrFe-4
43	SFA-5.11	ENiCrFe-7
43	SFA-5.11	ENiCrFe-9
43	SFA-5.11	ENiCrFe-10
43	SFA-5.11	ENiCrCoMo-1
43	SFA-5.11	ENiCrMo-2
43	SFA-5.11	ENiCrMo-3
43	SFA-5.11	ENiCrMo-6
43	SFA-5.11	ENiCrMo-12
43	SFA-5.14	ERNiCr-3
43	SFA-5.14	ERNiCr-4
43	SFA-5.14	ERNiCr-6
43	SFA-5.14	ERNiCrFe-5
43	SFA-5.14	ERNiCrFe-6
43	SFA-5.14	ERNiCrFe-7
43	SFA-5.14	ERNiCrFe-8
43	SFA-5.14	ERNiCrFe-11
43	SFA-5.14	ERNiCrCoMo-1
43	SFA-5.14	ERNiCrMo-2
43	SFA-5.14	ERNiCrMo-3
43	SFA-5.30	IN82
43	SFA-5.30	IN62
43	SFA-5.30	IN62A
44	SFA-5.11	ENiMo-1
44	SFA-5.11	ENiMo-3
44	SFA-5.11	ENiMo-7
44	SFA-5.11	ENiMo-8
44	SFA-5.11	ENiMo-9
44	SFA-5.11	ENiMo-10
44	SFA-5.11	ENiCrMo-4
44	SFA-5.11	ENiCrMo-5
44	SFA-5.11	ENiCrMo-7
44	SFA-5.11	ENiCrMo-10
44	SFA-5.11	ENiMo-13
44	SFA-5.11	ENiMo-14
44	SFA-5.14	ERNiMo-1
44	SFA-5.14	ERNiMo-2, ERNiMo-3
44	SFA-5.14	ERNiMo-7 (Alloy B-2)
44	SFA-5.14	ERNiMo-8
44	SFA-5.14	ERNiMo-9
44	SFA-5.14	ERNiMo-10
44	SFA-5.14	ERNiCrMo-4
44	SFA-5.14	ERNiCrMo-5
44	SFA-5.14	ERNiCrMo-7 (Alloy C-4)
44	SFA-5.14	ERNiCrMo-10

Copyright ASTM International
Provided by IHS under license with ASTM
No reproduction or networking permitted without license from IHS
Not for Resale

TABLE 5 *Continued*

F No.	ANSI/AWS Specification	ANSI/AWS Classification
44	SFA-5.14	ERNiCrMo-13
44	SFA-5.14	ERNiCrMo-14
44	SFA-5.14	ERNiCrWMo-1
45	SFA-5.11	ENiCrMo-1
45	SFA-5.11	ENiCrMo-9
45	SFA-5.11	ENiCrMo-11
45	SFA-5.14	ERNiCrMo-1
45	SFA-5.14	ERNiFeCr-1
45	SFA-5.14	ERNiCrMo-8
45	SFA-5.14	ERNiCrMo-9
45	SFA-5.14	ERNiCrMo-11
71	SFA-5.13	EFeMn-A, EFeMn-B,EFeMn-C,EFeMn-D, EFeMn-E, EFeMn-F, EFeMnCr

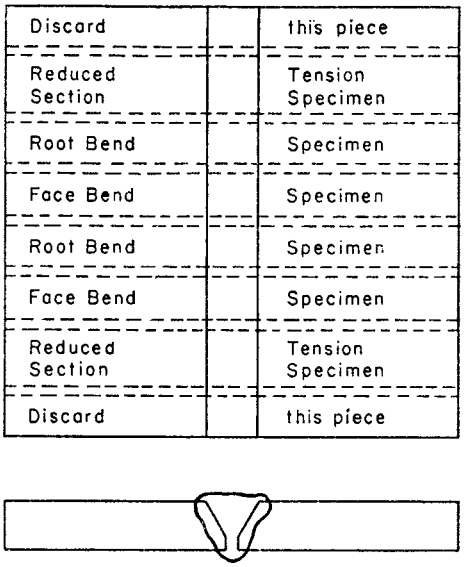

FIG. 15 Order of Removal of Test Specimens from Test Plate 1/16 to 3/4 in. [1.6 to 19.0 mm] Thick

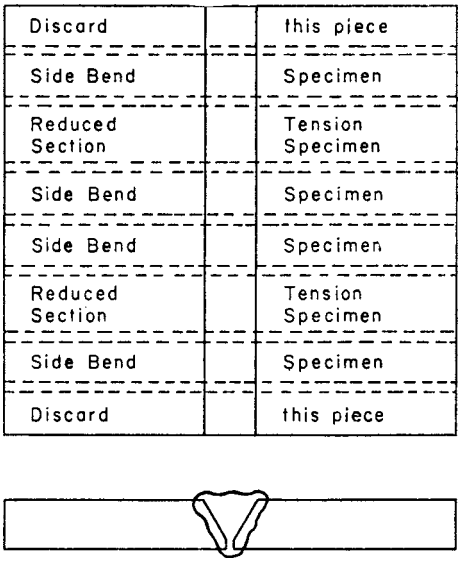

FIG. 16 Order of Removal of Test Specimens from Welded Test Plates over 3/4 in. [19.0 mm] Thick (May be Used for Thicknesses 3/8 to 3/4 in. [9.5 to 19.0 mm])

Copyright ASTM International
Provided by IHS under license with ASTM
No reproduction or networking permitted without license from IHS
Not for Resale

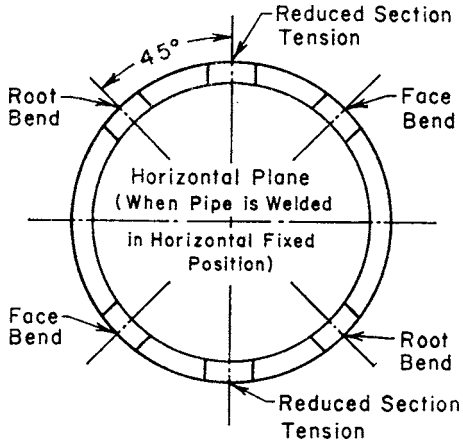

FIG. 17 Order of Removal of Test Specimens from Welded Pipe or Cylindrical Castings 1/16 to 3/4 in. [1.6 to 19.0 mm] Thick

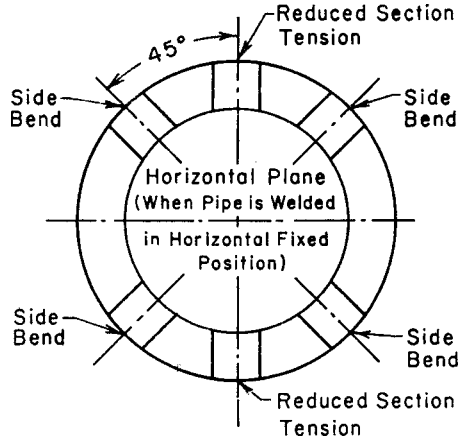

FIG. 18 Order of Removal of Test Specimens from Welded Pipe or Cylindrical Castings over 3/4 in. [19.0 mm] Thick (May be Used for Thicknesses 3/8 to 1/4 in. [9.5 to 19.0 mm])

APPENDIX

(Nonmandatory Information)

X1. PRACTICE A 488/A 488M CATEGORY NUMBER AND CORRESPONDING ASME P NUMBER

X1.1 Listed in Table X1.1 for information are the Practice A 488/A 488M categories of base metal casting specifications for welding qualifications and the corresponding P number designations from Section IX of the ASME Boiler and Pressure Vessel Code.

Copyright ASTM International
Provided by IHS under license with ASTM
No reproduction or networking permitted without license from IHS
Not for Resale

TABLE X1.1 ASTM Categories of Base Metal Casting Specifications and Corresponding P Number Designations

NOTE 1—The P numbers are under the jurisdiction of the ASME Boiler and Pressure Vessel Code and may be subject to change subsequent to the effective date of this specification.

ASTM			A 488/A 488M Category No.	ASME	
Specification	Grade	Class		P No.	Group No.
A 216/A 216M	WCA		1	1	1
	WCB		1	1	2
	WCC		2	1	2
A 217/A 217M	WC1		4	3	1
	WC4		4	4	1
	WC5		4	4	1
	WC6		4	4	1
	WC9		4	5A	1
	C5		5	5B	1
	C12		5	5B	1
	CA-15		8	6	3
A 351/A 351M	CF3		9	8	1
	CF3A		9	8	1
	CF8		10	8	1
	CF8A		10	8	1
	CF10		10	8	1
	CF10M		10	8	1
	CF3M		9	8	1
	CF8M		10	8	1
	CF8C		11	8	1
	CH8		10	8	2
	CH20		10	8	2
	CK20		11	8	2
	CN7M		11	45	. . .
	CG6MMN		10	8	3
	CG8M		10	8	1
	CD4MCU		12	10H	1
	CE8MN		10	10H	1
	CT15C		11	45	. . .
A 352/A 352M	CA6NM		8	6	4
	LCA		1	1	1
	LCB		1	1	1
	LCC		2	1	2
	LC1		4	3	1
	LC2		⅘	9A	1
	LC3		⅘	9B	1
	LC4		⅘	9C	1
	LC2-1		⅘	11A	5
A 487/A 487M	8	A	5	5B	1
	8B		6	5C	4
	8C		6	5C	4
	CA-15A		8	6	3
	CA-15B		8	6	3
	CA-15C		8	6	3
	CA-15D		8	6	3
	CA-15M	A	8	6	3
	CA 6NM	A	8	6	
	1	A	5	10A	1
	1	B	6	10A	1
	2	A	5	10F	1
	2	B	6	10F	1
	4	A	5	10F	1
	4	B	6	11A	3
	16	A	4	1	2
	4	E	6	11A	3

--`,,```,,,,````-`-`,,`,,`,`,,`---

Copyright ASTM International
Provided by IHS under license with ASTM
No reproduction or networking permitted without license from IHS
Not for Resale

SUMMARY OF CHANGES

Committee A01 has identified the location of selected changes to this standard since the last issue (A 488/A 488M-06) that may impact the use of this standard. (Approved May 1, 2007.)

(*1*) Added reference to A 958.

(*2*) Added Grades from A 958 to Table 1.

Committee A01 has identified the location of selected changes to this standard since the last issue (A 488/A 488M (04)) that may impact the use of this standard. (Approved Sept. 1, 2006.)

(*1*) In Section 2 added reference to A 128/A 128M.
(*2*) In section 10.2 added exception for Category 15 materials.
(*3*) Revised Fig. 4.
(*4*) In Table 1added Category 15.
(*5*) In Table 5 added F No. 71.

ASTM International takes no position respecting the validity of any patent rights asserted in connection with any item mentioned in this standard. Users of this standard are expressly advised that determination of the validity of any such patent rights, and the risk of infringement of such rights, are entirely their own responsibility.

This standard is subject to revision at any time by the responsible technical committee and must be reviewed every five years and if not revised, either reapproved or withdrawn. Your comments are invited either for revision of this standard or for additional standards and should be addressed to ASTM International Headquarters. Your comments will receive careful consideration at a meeting of the responsible technical committee, which you may attend. If you feel that your comments have not received a fair hearing you should make your views known to the ASTM Committee on Standards, at the address shown below.

This standard is copyrighted by ASTM International, 100 Barr Harbor Drive, PO Box C700, West Conshohocken, PA 19428-2959, United States. Individual reprints (single or multiple copies) of this standard may be obtained by contacting ASTM at the above address or at 610-832-9585 (phone), 610-832-9555 (fax), or service@astm.org (e-mail); or through the ASTM website (www.astm.org).

Copyright ASTM International
Provided by IHS under license with ASTM
No reproduction or networking permitted without license from IHS
Not for Resale