Designation: A 456/A 456M – 99 (Reapproved 2003)

Standard Specification for Magnetic Particle Examination of Large Crankshaft Forgings[1]

This standard is issued under the fixed designation A 456/A 456M; the number immediately following the designation indicates the year of original adoption or, in the case of revision, the year of last revision. A number in parentheses indicates the year of last reapproval. A superscript epsilon (ε) indicates an editorial change since the last revision or reapproval.

1. Scope

1.1 This is an acceptance specification for the magnetic particle inspection of forged steel crankshafts having main bearing journals or crankpins 4 in. [200 mm] or larger in diameter.

1.2 There are three classes, with acceptance standards of increasing severity:

1.2.1 Class 1.

1.2.2 Class 2 (originally the sole acceptance standard of Specification A 456).

1.2.3 Class 3 (formerly covered in Supplementary Requirement S1 of Specification A 456–64 (1970)).

1.3 This specification is not intended to cover continuous grain flow crankshafts, however, Test Method A 983/A 983M may be used for this purpose.

NOTE 1—Specification A 668/A 688M is a product specification which may be used for crankshaft forgings.

1.4 The values stated in either inches or SI (metric) units are to be regarded separately as the standard. Within the text and figures, the SI units are shown in brackets. The values stated in each system are not exact equivalents; therefore each system shall be used independently of the other. Combining values from the two systems may result in nonconformance with the specification.

1.5 Unless the order specifies the applicable "M" specification designation, the material shall be furnished to the inch units.

2. Referenced Documents

2.1 *ASTM Standards:* [2]

A 275/A 275M Test Method for Magnetic Particle Examination of Steel Forgings

A 668/A 668M Specification for Steel Forgings, Carbon and Alloy, for General Industrial Use

A 966/A 966M Test Method for Magnetic Particle Examination of Steel Forgings Using Alternating Current

A 983/A 983M Specification for Continuous Grain Flow Forged Carbon and Alloy Steel Crankshafts for Medium Speed Diesel Engines

E 1417 Practice for Liquid Penetrant Examination

3. Classification of Indications

3.1 Magnetic particle indications on the surface of the crankshaft shall be classified as follows:

3.1.1 Open cracks, flake, or pipe.

3.1.2 Nonmetallic inclusions or stringers occurring in a longitudinal direction.

3.1.3 Twist cracks or nonmetallic inclusions usually occurring at 45 to 70° from the axis of the journal.

3.2 They shall also be classified as follows:

3.2.1 Open indications are visible after removal of the magnetic particles or can be detected by the use of contrast dye penetrant, as described in Type II of Practice E 1417.

3.2.1.1 Pinpoint indications are open indications 1/16 in. [1.5 mm] in maximum dimension, as detected by application of Type II of Practice E 1417.

3.2.2 Non-open indications are indications which are not visually detectable as described in 3.2.1.

4. Ordering Information

4.1 The inquiry and purchase agreement shall contain a statement that the crankshaft(s) is (are) to be subject to acceptance according to this specification. If reference to class is omitted, Class 2 shall apply.

4.2 The use of Supplementary Requirements S1 and S2 should be specified if required.

5. Procedure

5.1 Magnetic particle inspection shall be conducted according to Test Method A 966/A 966M, except when Supplementary Requirement S1 is to be used. The use of prod type contacts is not permitted on finished crankshafts. Magnetic

[1] This specification is under the jurisdiction of ASTM Committee A01 on Steel, Stainless Steel, and Related Alloys , and is the direct responsibility of Subcommittee A01.06 on Steel Forgings and Billets.

Current edition approved Oct. 1, 2003. Published November 2003. Originally approved in 1999. Last previous edition approved in 1999 as A 456–99.

[2] For referenced ASTM standards, visit the ASTM website, www.astm.org, or contact ASTM Customer Service at service@astm.org. For *Annual Book of ASTM Standards* volume information, refer to the standard's Document Summary page on the ASTM website.

Copyright © ASTM International, 100 Barr Harbor Drive, PO Box C700, West Conshohocken, PA 19428-2959, United States.

Copyright ASTM International
Provided by IHS under license with ASTM
No reproduction or networking permitted without license from IHS
Not for Resale

leeches may only be used on noncritical parts of the crankshaft when Supplementary Requirement S2 is utilized.

6. Areas of Inspection

6.1 *Major Critical Areas*:

6.1.1 The critical area of any crankpin shall be that area plus or minus 60° from the 6 o'clock position of the pin extending ⅜ in. [10 mm] above the thrust collar around the fillet, and ⅝ in. [16 mm] into the pin along its axis measured from approximately the blend of the pin surface and fillet, as shown in Fig. 1 and Fig. 2.

6.1.2 The critical areas of any main bearing journal shall be that area plus or minus 60° from the 12 o'clock position on top of the journal extending ⅜ in. [9.5 mm] above the thrust collar around the fillet and ⅝ in. [15.9 mm] into the journal along its axis measured from approximately the blend of the journal surface and the fillet, as shown in Fig. 1 and Fig. 2.

6.1.3 The critical area of any crankpin or main journal also includes that surface area closer than ¼ in. [6 mm] to the junction of the radius blend and the journal surface of any oil hole.

6.2 *Minor Critical Areas*—Minor critical areas include all machined fillets, thrust bearing, and bearing surfaces not specified as major critical areas.

7. Acceptance Standards

7.1 *Class 1*:

7.1.1 *Major Critical Areas*:

7.1.1.1 Open indications over ¼ in. [6 mm] in length shall be removed by dimpling to a depth no greater than 3⁄16 in. [5 mm]. Open indications over 1⁄16 to ¼ in. [1.5 to 6 mm] in length shall be depressed as in 7.2.2.3.

7.1.1.2 Pinpoint indications are permissible, except in clusters of more than 5 in any ¼ by ¼-in. [6 by 6-mm] area, in which case they must be dimpled to a depth of no more than 3⁄16 in. [5 mm]. If they do not open or increase in number they are acceptable and need not be removed.

7.1.1.3 Non-open indications are acceptable up to and including ½ in. [13 mm] in length. If non-open indications are over ½ in., depress, and if they are not open or are worsening, accept them. Otherwise remove by dimpling to a maximum depth of 3⁄16 in. [5 mm].

7.1.1.4 The total area of dimples shall be limited as in 7.2.1.3.

7.1.2 *Minor Critical Areas*:

7.1.2.1 Open indications oriented at an angle in excess of 30° to the longitudinal axis must be removed to a depth not exceeding 3⁄16 in. [5 mm], by dimpling.

7.1.2.2 Open indications longer than 1½ in. [35 mm] individually or more than 3 in. [75 mm] of total length per bearing journal, that are parallel to the longitudinal axis within 30°, must be removed by dimpling to a depth no greater than 3⁄16 in. [5 mm]. Intermittent open indications in a line, spaced less than ¼ in. [6 mm] apart, shall be considered continuous or as one indication.

7.1.2.3 Open indications ⅛ in. [3 mm] to 1½ in. [35 mm] long, with the exception of those referred to in 7.1.2.1, shall be depressed 0.003 to 0.010 in. [0.05 to 0.25 mm] below the surface but need not be removed.

7.1.2.4 Open indications less than ⅛ in. [3 mm] long need not be depressed, dimpled, or removed.

7.1.2.5 A cluster of open indications, with the exception of those referred to in 7.1.2.1, having a total length not exceeding 2½ in. [65 mm] in any 1 by 1-in. [25 by 25-mm] square area

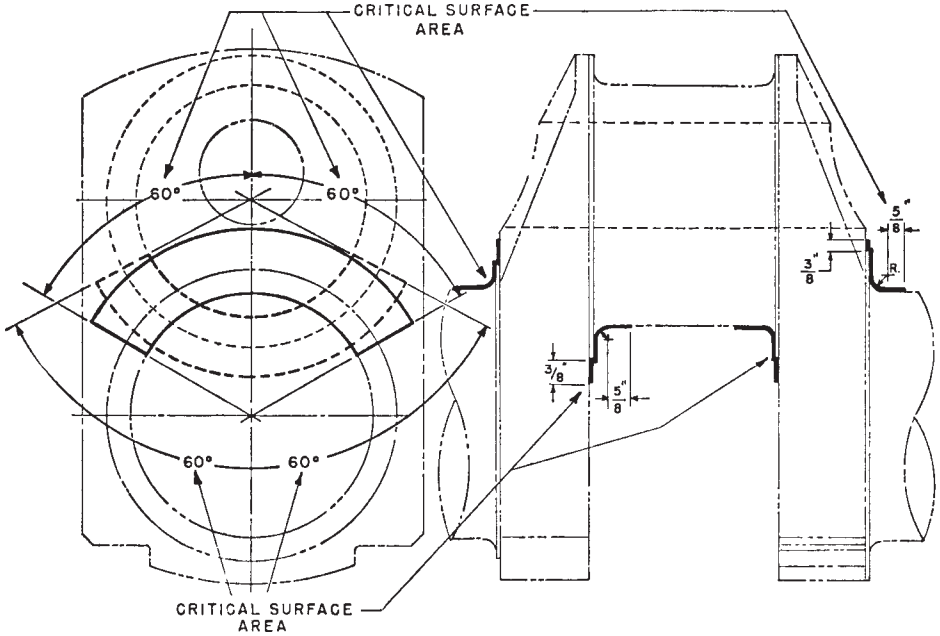

Metric Equivalents

⅜ in. = [10 mm] ⅝ in. = [16 mm]

FIG. 1 Critical Surface Areas of Crankpin and Main Bearing Journal

Copyright ASTM International
Provided by IHS under license with ASTM
No reproduction or networking permitted without license from IHS
Not for Resale

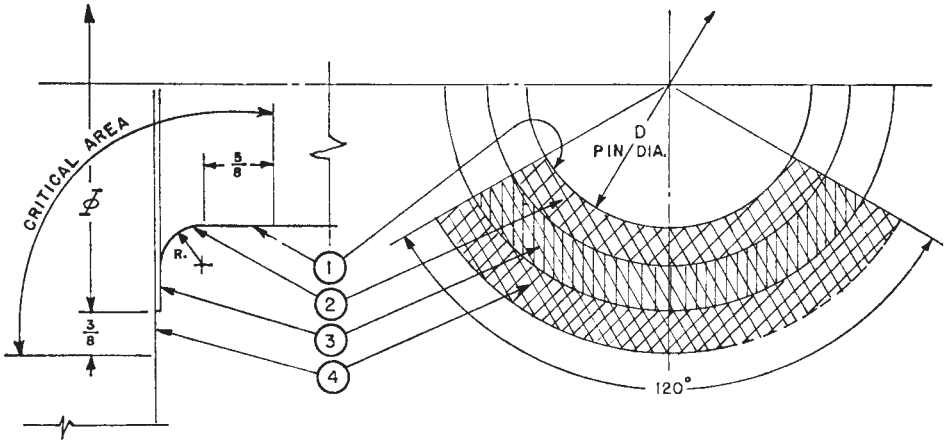

(*1*)—⅝ in. [16 mm] on pin or journal,
(*2*)—Fillet radius, *R*,
(*3*)—Thrust collar, and
(*4*)—⅜ –in. [10-mm] ring beyond thrust collar.

NOTE 1—The critical area is 120 degrees on the pin or journal.

FIG. 2 Reference Dimensions for Calculations

of bearing surface shall be depressed 0.003 to 0.010 in. [0.05 to 0.25 mm] below the surface but need not be removed. When the total length exceeds 2½ in. [65 mm], the indications are to be removed by dimpling to a depth no greater than 3⁄16 in. [5 mm].

7.1.2.6 Non-open indications are acceptable.

7.1.2.7 The total area of dimples in any journal or crankpin shall not exceed 1 % of the total minor critical area of the crankpin or main journal concerned.

7.1.3 *Number of Dimples*—The number of dimples per crankshaft, excluding dimples in the areas defined in 6.1.3, shall not exceed the sum of the number of the crankpins and main journals, nor five per crankpin or main journal.

7.2 *Class 2*:

7.2.1 *Major Critical Areas*:

7.2.1.1 Open indications other than pinpoints are not permitted and must be removed by dimpling to a depth no greater than 3⁄16 in. [5 mm]. Pinpoint indications are permissible, if there are no more than three in any ¼ by ¼-in. [6 by 6-mm] square area. Pinpoints in excess of three must be dimpled to a depth of 3⁄16 in. [5 mm] and reduced to no more than three pinpoints unless they are removed at a lesser depth. If no more than three pinpoints remain at the 3⁄16-in. [5-mm] depth, they are acceptable and need not be removed.

7.2.1.2 Magnetic particle buildup exceeding ¼ in. [6 mm] in length and which has been found to be non-open by the procedure described in 3.2.1 shall be jointly investigated by the manufacturer and purchaser, or their representatives. Each indication, or, with the concurrence of the purchaser, selected representative indications, shall be explored to a depth of at least 0.003 in. [0.05 mm], but not exceeding 0.010 in. [0.25 mm]. If open indications are found (3.2.1), then the requirements of 7.2.1.1 shall apply. If open indications are not found, then the indications are acceptable and any explored area shall be suitable radiused and classed as a depressed area rather than a dimple. If the presence of subsurface discontinuities is to be investigated, then Test Method A 275/A 275M shall be included in such an investigation. However, caution should be exercised in demagnetizing the crankshaft on completion of this examination.

7.2.1.3 The total area of dimples shall be less than 10 % of the total major critical area of the crankpin or journal concerned. The areas referred to in 6.1.3 shall be excluded from the total area allowable.

7.2.2 *Minor Critical Areas*:

7.2.2.1 Open indications oriented at an angle in excess of 30° to the longitudinal axis must be removed at a depth not exceeding 3⁄16 in. [5 mm], by dimpling.

7.2.2.2 Open indications longer than 1 in. [25 mm] individually or more than 2 in. [50 mm] of total length per bearing journal, that are parallel to the longitudinal axis within 30°, must be removed by dimpling to a depth no greater than 3⁄16 in. [5 mm]. Intermittent open indications in a line, spaced less than ¼ in. [6 mm] apart, shall be considered continuous or as one indication.

7.2.2.3 Open indications ⅛ to 1 in. [3 to 25 mm] long, with the exception of those referred to in 7.2.2.1, shall be depressed 0.003 to 0.010 in. [0.05 to 0.25 mm] below the surface but need not be removed.

7.2.2.4 Open indications less than ⅛ in. [3 mm] long need not be depressed, dimpled, or removed.

7.2.2.5 A cluster of open indications, with the exception of those referred to in 7.2.2.1, having a total length not exceeding 1½ in. [35 mm] in any 1 by 1-in. [25 by 25-mm] square area of bearing surface, shall be depressed 0.003 to 0.010 in. [0.05 to 0.25 mm] below the surface but need not be removed. When the total length exceeds 1½ in. [35 mm], the indications are to be removed by dimpling to a depth no greater than 3⁄16 in. [5 mm].

7.2.2.6 Non-open indications are acceptable.

Copyright ASTM International
Provided by IHS under license with ASTM
No reproduction or networking permitted without license from IHS
Not for Resale

7.2.2.7 The total area of dimples in any journal or crankpin shall not exceed 1 % of the total minor critical area of the crankpin or main journal concerned.

7.2.3 *Number of Dimples*—The number of dimples per crankshaft, excluding dimples in the areas defined in 6.1.3, shall not exceed the sum of the number of the crankpins and main journals, nor five per crankpin or main journal.

7.3 *Class 3*:

7.3.1 *Major Critical Areas*—See 7.2.1.

7.3.2 *Minor Critical Areas*:

7.3.2.1 Open indications oriented at an angle in excess of 30° to the longitudinal axis must be removed at a depth not exceeding 3⁄16 in. [5 mm], by dimpling.

7.3.2.2 Open indications longer than 1⁄8 in. [3 mm] that are parallel to the longitudinal axis within 30° must be removed by dimpling to a depth no greater than 3⁄16 in. [5 mm]. Intermittent open indications in a line, spaced less than 1⁄4 in. [6 mm] apart, shall be considered continuous or as one indication.

7.3.2.3 Open indications (except pinpoint indications) 1⁄8 in. [3 mm] or less in length, with the exception of those referred to in 7.3.2.1, shall be depressed 0.003 to 0.010 in. [0.05 to 0.25 mm], below the surface, but need not be removed.

7.3.2.4 Non-open indications are acceptable.

7.3.2.5 The total areas of dimples in any journal or crankpin shall not exceed 1 % of the total minor critical area of the crankpin of main journal concerned.

8. Dimpling and Depressing

8.1 To dimple means to stone or grind to remove stock in an area that contains an open indication. All dimples shall have a bottom radius of approximately three times the dimple depth and should be smoothly blended to the surface area with a finish equal to the adjacent bearing surface.

8.2 To depress is to flatten or relieve the edges of an indication with a fine pointed abrasive stone with the restriction that the depth beneath the original surface shall be 0.003 in. [0.05 mm] minimum to 0.010 in. [0.25 mm] maximum and that the depressions be blended into the bearing surface. A depressed area is not considered a dimple and is made only to prevent galling of the bearings.

9. Inspection

9.1 The manufacturer shall afford the purchaser's inspector all reasonable facilities necessary to satisfy him that the material is being produced and furnished in accordance with this specification. All tests and inspections shall be made at the place of manufacture, unless otherwise agreed to, and shall not interfere unnecessarily with the manufacturer's operations.

9.2 Upon agreement with the purchaser or if expressed in the order or if shown on the drawing, the manufacturer of the crankshaft shall certify that the crankshaft was tested and is in accordance with this specification.

10. Product Marking

10.1 The purchaser of the crankshaft shall provide the manufacturer with any marking or stamping identification required.

11. Keywords

11.1 acceptance criteria; crankshaft forgings; magnetic particle examination; nondestructive examination

SUPPLEMENTARY REQUIREMENTS

The following supplementary requirements shall apply only when specified by the purchaser in the contract or order.

S1. Use of Direct Current Magnetization

S1.1 The magnetic particle examination of the crankshaft shall be done in accordance with Test Method A 275/A 275M.

S2. Use of Magnetic Leeches

S2.1 Magnetic leeches shall be applied only to noncritical surfaces of the crankshaft, as designated in the crankshaft drawing, or as permitted by the purchaser.

ASTM International takes no position respecting the validity of any patent rights asserted in connection with any item mentioned in this standard. Users of this standard are expressly advised that determination of the validity of any such patent rights, and the risk of infringement of such rights, are entirely their own responsibility.

This standard is subject to revision at any time by the responsible technical committee and must be reviewed every five years and if not revised, either reapproved or withdrawn. Your comments are invited either for revision of this standard or for additional standards and should be addressed to ASTM International Headquarters. Your comments will receive careful consideration at a meeting of the responsible technical committee, which you may attend. If you feel that your comments have not received a fair hearing you should make your views known to the ASTM Committee on Standards, at the address shown below.

This standard is copyrighted by ASTM International, 100 Barr Harbor Drive, PO Box C700, West Conshohocken, PA 19428-2959, United States. Individual reprints (single or multiple copies) of this standard may be obtained by contacting ASTM at the above address or at 610-832-9585 (phone), 610-832-9555 (fax), or service@astm.org (e-mail); or through the ASTM website (www.astm.org).

Copyright ASTM International
Provided by IHS under license with ASTM
No reproduction or networking permitted without license from IHS
Not for Resale