DICOM

Part 4

Service Class Specifications

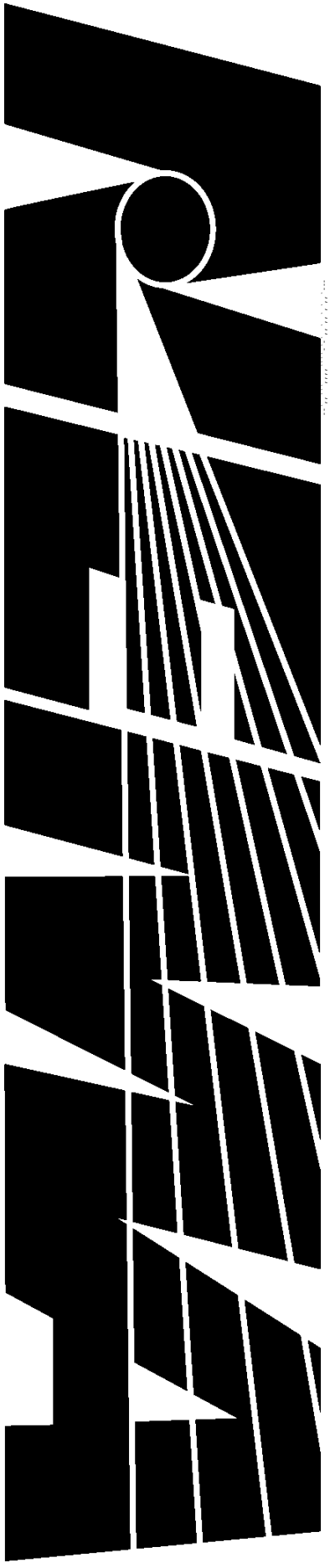

DICOM®
Digital Imaging and Communications in Medicine

Provided by IHS
No reproduction or networking permitted without license from IHS
Not for Resale



NATIONAL ELECTRICAL MANUFACTURERS ASSOCIATION
1300 North 17th Street, Suite 1752, Rosslyn, Virginia 22209

--`,,```,,,,````-`-`,,`,,`,`,,`---

Provided by IHS
No reproduction or networking permitted without license from IHS

Not for Resale

Digital Imaging and Communications in Medicine (DICOM)

Part 4: Service Class Specifications

Published by

National Electrical Manufacturers Association
1300 N. 17th Street
Rosslyn, Virginia 22209 USA

© Copyright 2006 by the National Electrical Manufacturers Association. All rights including translation into other languages, reserved under the Universal Copyright Convention, the Berne Convention for the Protection of Literacy and Artistic Works, and the International and Pan American Copyright Conventions.

- Standard -

Provided by IHS
No reproduction or networking permitted without license from IHS
Not for Resale

NOTICE AND DISCLAIMER

The information in this publication was considered technically sound by the consensus of persons engaged in the development and approval of the document at the time it was developed. Consensus does not necessarily mean that there is unanimous agreement among every person participating in the development of this document.

NEMA standards and guideline publications, of which the document contained herein is one, are developed through a voluntary consensus standards development process. This process brings together volunteers and/or seeks out the views of persons who have an interest in the topic covered by this publication. While NEMA administers the process and establishes rules to promote fairness in the development of consensus, it does not write the document and it does not independently test, evaluate, or verify the accuracy or completeness of any information or the soundness of any judgments contained in its standards and guideline publications.

NEMA disclaims liability for any personal injury, property, or other damages of any nature whatsoever, whether special, indirect, consequential, or compensatory, directly or indirectly resulting from the publication, use of, application, or reliance on this document. NEMA disclaims and makes no guaranty or warranty, expressed or implied, as to the accuracy or completeness of any information published herein, and disclaims and makes no warranty that the information in this document will fulfill any of your particular purposes or needs. NEMA does not undertake to guarantee the performance of any individual manufacturer or seller's products or services by virtue of this standard or guide.

In publishing and making this document available, NEMA is not undertaking to render professional or other services for or on behalf of any person or entity, nor is NEMA undertaking to perform any duty owed by any person or entity to someone else. Anyone using this document should rely on his or her own independent judgment or, as appropriate, seek the advice of a competent professional in determining the exercise of reasonable care in any given circumstances. Information and other standards on the topic covered by this publication may be available from other sources, which the user may wish to consult for additional views or information not covered by this publication.

NEMA has no power, nor does it undertake to police or enforce compliance with the contents of this document. NEMA does not certify, test, or inspect products, designs, or installations for safety or health purposes. Any certification or other statement of compliance with any health or safety–related information in this document shall not be attributable to NEMA and is solely the responsibility of the certifier or maker of the statement.

--`,,```,,,,````-`-`,,`,,`,`,,`---

Provided by IHS
No reproduction or networking permitted without license from IHS Not for Resale

CONTENTS

Clause **Page**

NOTICE AND DISCLAIMER 2
CONTENTS 3
FOREWORD 1
1 SCOPE AND FIELD OF APPLICATION 2
2 NORMATIVE REFERENCES 2
3 DEFINITIONS 3
3.1 REFERENCE MODEL DEFINITIONS 3
3.2 SERVICE CONVENTIONS DEFINITIONS 3
3.3 DICOM INTRODUCTION AND OVERVIEW DEFINITIONS 3
3.4 DICOM UPPER LAYER SERVICE DEFINITIONS 3
3.5 DICOM MESSAGE EXCHANGE DEFINITIONS 3
3.6 DICOM INFORMATION OBJECT DEFINITIONS 3
3.7 DICOM CONFORMANCE 4
3.8 DICOM DATA STRUCTURES AND ENCODING 4
3.9 DICOM SERVICE CLASS DEFINITIONS 4
3.10 DEVICE INDEPENDENT PIXEL VALUES 5
4 SYMBOLS AND ABBREVIATIONS 5
5 CONVENTIONS 6
5.1 ENTITY-RELATIONSHIP MODEL 6
5.1.1 Entity 6
5.1.2 Relationship 6
5.2 SEQUENCES 7
5.3 RESPONSE STATUS VALUES 7
5.4 USAGE SPECIFICATION 7
6 DICOM INFORMATION MODEL 8
6.1 INFORMATION OBJECT DEFINITION 9
6.1.1 Composite IOD 9
6.1.2 Normalized IOD 10
6.2 ATTRIBUTES 10
6.3 ON-LINE COMMUNICATION AND MEDIA STORAGE SERVICES 10
6.3.1 DIMSE-C Services 10
6.3.2 DIMSE-N Services 10
6.4 DIMSE SERVICE GROUP 10
6.5 SERVICE-OBJECT PAIR (SOP) CLASS 11
6.5.1 Normalized and Composite SOP Classes 11
6.6 ASSOCIATION NEGOTIATION 11
6.7 SERVICE CLASS SPECIFICATION 11
7 DICOM MODEL OF THE REAL WORLD 11
Annex A VERIFICATION SERVICE CLASS (Normative) 12

--`,,```,,,,````-`-`,,`,,`,`,,`---

Provided by IHS
No reproduction or networking permitted without license from IHS Not for Resale

A.1 OVERVIEW....12
A.1.1 Scope....12
A.2 SCU/SCP BEHAVIOR....12
A.3 DIMSE-C SERVICE GROUP....12
A.4 VERIFICATION SOP CLASS....12
A.5 ASSOCIATION NEGOTIATION....12
A.6 CONFORMANCE....12
A.6.1 Conformance supporting the SCU role....12
A.6.2 Conformance Supporting the SCP Role....13
A.6.3 Conformance statement....13
Annex B STORAGE SERVICE CLASS (Normative)....14
B.1 OVERVIEW....14
B.1.1 Scope....14
B.1.2 Service Definition....14
B.2 BEHAVIOR....14
B.2.1 Behavior of an SCU....14
B.2.2 Behavior of an SCP....15
B.2.3 Statuses....15
B.3 ASSOCIATION NEGOTIATION....15
B.3.1 Extended Negotiation....16
B.4 CONFORMANCE....19
B.4.1 Conformance as An SCP....19
B.4.2 Conformance as An SCU....20
B.4.3 Conformance Statement Requirements....21
B.4.4 Specialized Conformance....21
B.5 STANDARD SOP CLASSES....22
B.5.1 Specialization for Standard SOP Classes....25
B.6 RETIRED STANDARD SOP CLASSES....27
Annex C QUERY/RETRIEVE SERVICE CLASS (Normative)....28
C.1 OVERVIEW....28
C.1.1 Scope....28
C.1.2 Conventions....28
C.1.3 Query/retrieve Information Model....28
C.1.4 Service Definition....28
C.2 QUERY/RETRIEVE INFORMATION MODEL DEFINITION....30
C.2.1 Entity-Relationship Model Definition....30
C.2.2 Attributes Definition....30
C.3 STANDARD QUERY/RETRIEVE INFORMATION MODELS....35
C.3.1 Patient Root Query/Retrieve Information Model....35
C.3.2 Study Root Query/Retrieve Information Model....35
C.3.3 Patient/Study Only Query/Retrieve Information Model....35
C.3.4 Additional Query/Retrieve Attributes....35
C.4 DIMSE-C SERVICE GROUPS....36
C.4.1 C-FIND Operation....36
C.4.2 C-MOVE Operation....42
C.4.3 C-GET Operation....48
C.5 ASSOCIATION NEGOTIATION....53
C.5.1 Association Negotiation for C-FIND SOP Classes....53
C.5.2 Association Negotiation for C-MOVE SOP Classes....55
C.5.3 Association Negotiation for C-GET SOP Classes....56
C.6 SOP CLASS DEFINITIONS....59

--`,,```,,,,````-`-`,,`,,`,`,,`---

Provided by IHS
No reproduction or networking permitted without license from IHS Not for Resale

C.6.1 Patient Root SOP Class Group 59
C.6.2 Study Root SOP Class Group 67
C.6.3 Patient/Study Only SOP Class Group 72
Annex D STUDY CONTENT NOTIFICATION SERVICE CLASS (Normative) 73
Annex E PATIENT MANAGEMENT SERVICE CLASS (Normative) 74
Annex F PROCEDURE STEP SOP CLASSES (Normative) 75
F.1 OVERVIEW 75
F.1.1 Scope 75
F.1.2 Study Management Functional Model 75
F.1.3 Study Management Information Model 75
F.1.4 Study Management States 75
F.1.5 Modality Performed Procedure Step Management States 75
F.1.6 General Purpose Scheduled Procedure Step Management States 76
F.1.7 General Purpose Performed Procedure Step Management States 78
F.2 CONFORMANCE OVERVIEW 79
F.2.1 Association Negotiation 80
F.3 DETACHED STUDY MANAGEMENT SOP CLASS 80
F.4 STUDY COMPONENT MANAGEMENT SOP CLASS 80
F.5 STUDY MANAGEMENT META SOP CLASS 80
F.6 SPECIALIZED SOP CLASS CONFORMANCE 80
F.7 MODALITY PERFORMED PROCEDURE STEP SOP CLASS 80
F.7.1 DIMSE Service Group 80
F.7.2 Operations 80
F.7.3 Modality Performed Procedure Step SOP Class UID 88
F.7.4 Conformance Requirements 88
F.8 MODALITY PERFORMED PROCEDURE STEP RETRIEVE SOP CLASS 89
F.8.1 DIMSE Service Group 89
F.8.2 Operations 90
F.8.3 Modality Performed Procedure Step Retrieve SOP Class UID 95
F.8.4 Conformance Requirements 95
F.9 MODALITY PERFORMED PROCEDURE STEP NOTIFICATION SOP CLASS 95
F.9.1 DIMSE service group 96
F.9.2 Notifications 96
F.9.3 Modality Performed Procedure Step Notification SOP Class UID 97
F.9.4 Conformance Requirements 97
F.10 GENERAL PURPOSE SCHEDULED PROCEDURE STEP SOP CLASS 98
F.10.1 DIMSE Service Group 98
F.10.2 Operations 98
F.10.3 General Purpose Scheduled Procedure Step SOP Class UID 101
F.10.4 Conformance Requirements 101
F.11 GENERAL PURPOSE PERFORMED PROCEDURE STEP SOP CLASS 102
F.11.1 DIMSE Service Group 102
F.11.2 Operations 102
F.11.3 General Purpose Performed Procedure Step SOP Class UID 116
F.11.4 Conformance Requirements 116
Annex G RESULTS MANAGEMENT SERVICE CLASS (Normative) 118
Annex H PRINT MANAGEMENT SERVICE CLASS (Normative) 119
H.1 SCOPE 119
H.2 PRINT MANAGEMENT MODEL 119
H.2.1 Print Management Data Flow Model 119
H.2.2 Print Management Service Class Structure 122

--`,,```,,,,````-`-`,,`,,`,`,,`---

Provided by IHS
No reproduction or networking permitted without license from IHS
Not for Resale

H.2.3 Print Management SOP Classes....123
H.2.4 Usage Specifications....124
H.2.5 Status Code Categories....124
H.3 PRINT MANAGEMENT CONFORMANCE....125
H.3.1 Scope....125
H.3.2 Print Management Meta SOP Classes....125
H.3.3 Optional SOP Classes....126
H.3.4 Conformance statement....127
H.4 PRINT MANAGEMENT SOP CLASS DEFINITIONS....128
H.4.1 Basic Film Session SOP Class....128
H.4.2 Basic Film Box SOP Class....132
H.4.3 Image Box SOP Classes....138
H.4.4 Basic Annotation Box SOP Class....143
H.4.5 Print Job SOP Class....144
H.4.6 PRINTER SOP Class....146
H.4.7 VOI LUT Box SOP Class (Retired)....148
H.4.8 Image Overlay Box SOP Class (Retired)....148
H.4.9. Presentation LUT SOP Class....148
H.4.10 Pull Print Request SOP Class (Retired)....151
H.4.11 Printer Configuration Retrieval SOP Class....151
H.4.12 Basic Print Image Overlay Box SOP Class (Retired)....153
H.5 ASSOCIATION NEGOTIATION....153
H.6 EXAMPLE OF PRINT MANAGEMENT SCU SESSION (Informative)....154
H.6.1 Simple Example....154
H.6.2 Advanced Example (Retired)....154
H.7 EXAMPLE OF THE PULL PRINT REQUEST META SOP CLASS (Informative)....154
H.8 OVERLAY EXAMPLES (Informative)....155
Annex I MEDIA STORAGE SERVICE CLASS (Normative)....156
I.1 OVERVIEW....156
I.1.1 Scope....156
I.1.2 Service Definition....156
I.2 BEHAVIOR....156
I.2.1 Behavior of an FSC....156
I.2.2 Behavior of an FSR....156
I.2.3 Behavior of an FSU....156
I.3 CONFORMANCE....157
I.3.1 Conformance as an FSC....157
I.3.2 Conformance as an FSR....157
I.3.3 Conformance as an FSU....157
I.3.4 Conformance Statement Requirements....158
I.3.5 Standard Extended, Specialized, and Private Conformance....158
I.4 MEDIA STORAGE STANDARD SOP CLASSES....158
I.4.1Specialization for Standard SOP Classes....161
I.5 RETIRED STANDARD SOP CLASSES....162
Annex J STORAGE COMMITMENT SERVICE CLASS (Normative)....163
J.1 OVERVIEW....163
J.1.1 Scope....163
J.1.2 Models Overview....163
J.2 CONFORMANCE OVERVIEW....164
J.2.1 Association Negotiation....164
J.3 STORAGE COMMITMENT PUSH MODEL SOP CLASS....164
J.3.1 DIMSE Service Group....164

--`,,```,,,,````-`-`,,`,,`,`,,`---

Provided by IHS
No reproduction or networking permitted without license from IHS
Not for Resale

J.3.2 Operations 164
J.3.3 Notifications 167
J.3.4 Storage Commitment Push Model SOP Class UID 170
J.3.5 Storage Commitment Push Model Reserved Identification 170
J.3.6 Conformance Requirements 170
J.4 STORAGE COMMITMENT PULL MODEL SOP CLASS (RETIRED) 172
J.5 STORAGE COMMITMENT EXAMPLES (Informative) 172
Annex K BASIC WORKLIST MANAGEMENT SERVICE (Normative) 173
K.1 OVERVIEW....173
K.1.1 Scope....173
K.1.2 Conventions....173
K.1.3 Worklist Information Model....173
K.1.4 Service Definition....174
K.2 WORKLIST INFORMATION MODEL DEFINITION 174
K.2.1 Entity-Relationship Model Definition....174
K.2.2 Attributes Definition 175
K.3 WORKLIST INFORMATION MODEL....176
K.4 DIMSE-C SERVICE GROUP....176
K.4.1 C-FIND Operation....177
K.5 ASSOCIATION NEGOTIATION 179
K.6 SOP CLASS DEFINITIONS....180
K.6.1 Modality Worklist SOP Class....180
K.6.2 General Purpose Worklist SOP Class 190
K.7 EXAMPLES FOR THE USAGE OF THE MODALITY WORKLIST (Informative)..200
K.8 GENERAL PURPOSE WORKLIST EXAMPLE (INFORMATIVE)....200
Annex L QUEUE MANAGEMENT SERVICE CLASS (Normative) 201
Annex M : HANDLING OF IDENTIFYING PARAMETERS (Informative) 202
Annex N SOFTCOPY PRESENTATION STATE STORAGE SOP CLASSES (Normative)203
N.1. OVERVIEW....203
N.1.1 Scope....203
N.2 PIXEL TRANSFORMATION SEQUENCE 204
N.2.1 Grayscale Transformations 206
N.2.2 Color Transformations....208
N.2.3 Common Spatial and Annotation Transformations 210
N.2.4 Blending Transformations 211
N.3 BEHAVIOR OF AN SCP....213
N.4 CONFORMANCE 213
N.4.1 Conformance Statement for An SCU 213
N.4.2 Conformance Statement for An SCP 214
Annex O STRUCTURED REPORTING STORAGE SOP CLASSES (Normative) 215
O.1 OVERVIEW....215
O.2 BEHAVIOR 215
O.2.1 Behavior of an SCU....215
O.2.2 Behavior of an SCP....215
O.3 MODIFICATION OF SR DOCUMENT CONTENT 216
O.4 CONFORMANCE 216
O.4.1 Conformance Statement for an SCU....216
O.4.2 Conformance Statement for an SCP....217
Annex P APPLICATION EVENT LOGGING SERVICE CLASS (Normative) 218

Provided by IHS
No reproduction or networking permitted without license from IHS
Not for Resale

P.1 OVERVIEW....218
P.1.1 Scope....218
P.1.2 Service Definition....218
P.2 PROCEDURAL EVENT LOGGING SOP CLASS DEFINITION....218
P.2.1 DIMSE Service Group....219
P.2.2 Operation....219
P.2.3 Procedural Event Logging SOP Class UID....221
P.2.4 Procedural Event Logging Instance Identification....221
P.2.5 Conformance Requirements....221
Annex Q Relevant Patient Information Query Service Class (Normative)....223
Q.1 OVERVIEW....223
Q.2 DIMSE-C SERVICE GROUP....223
Q.2.1 C-FIND Operation....223
Q.3 ASSOCIATION NEGOTIATION....225
Q.4 DIMSE-C C-FIND SERVICE....225
Q.4.1 Conventions....225
Q.4.2 Service Definition....225
Q.4.3 Relevant Patient Information Model SOP Classes....226
Q.5 RELEVANT PATIENT INFORMATION QUERY EXAMPLE (INFORMATIVE)....230
Annex R INSTANCE AVAILABILITY NOTIFICATION SERVICE CLASS (Normative)....231
R.1 OVERVIEW....231
R.1.1 Scope....231
R.2 CONFORMANCE OVERVIEW....231
R.3 INSTANCE AVAILABILITY NOTIFICATION SOP CLASS....232
R.3.1 DIMSE Service Group....232
R.3.2 Operations....232
R.3.3 Instance Availability Notification SOP Class UID....233
R.3.4 Conformance Requirements....233
Annex S MEDIA CREATION MANAGEMENT SERVICE CLASS (Normative)....235
S.1 OVERVIEW....235
S.1.1 Scope....235
S.2 CONFORMANCE OVERVIEW....236
S.2.1 Association Negotiation....236
S.3 MEDIA CREATION MANAGEMENT SOP CLASS....236
S.3.1 DIMSE Service Group....236
S.3.2 Operations....236
S.3.3 Media Creation Management SOP Class UID....246
S.4 CONFORMANCE REQUIREMENTS....246
S.4.1 SCU Conformance....246
S.4.2 SCP Conformance....247
Annex T HANGING PROTOCOL STORAGE SERVICE CLASS....249
T.1 OVERVIEW....249
T.1.1 Scope....249
T.1.2 Service Definition....249
T.2 ASSOCIATON NEGOTIATION....249
T.3 CONFORMANCE OVERVIEW....249
T.4 HANGING PROTOCOL STORAGE SOP CLASS....249
T.4.1 Service Class User....249
T.4.2 Service Class Provider....250
T.4.3 Hanging Protocol Storage SOP Class UID....250

Provided by IHS
No reproduction or networking permitted without license from IHS
Not for Resale

T.4.4 Conformance Statement Requirements....250
Annex U HANGING PROTOCOL QUERY/RETRIEVE SERVICE CLASS....252
U.1 OVERVIEW....252
U.1.1 Scope....252
U.1.2 Conventions....252
U.1.3 Query/Retrieve Information Model....252
U.1.4 Service Definition....252
U.2 HANGING PROTOCOL INFORMATION MODEL DEFINITION....252
U.3 HANGING PROTOCOL INFORMATION MODEL....252
U.4 DIMSE-C SERVICE GROUPS....252
U.4.1 C-FIND Operation....252
U.4.2 C-MOVE Operation....253
U.5 ASSOCIATION NEGOTIATION....253
U.6 SOP CLASS DEFINITIONS....253
U.6.1 Hanging Protocol Information Model....253
Annex T INDEX TO ATTRIBUTE TAGS AND UIDs (Informative)....257

Provided by IHS
No reproduction or networking permitted without license from IHS
Not for Resale

Provided by IHS
No reproduction or networking permitted without license from IHS
Not for Resale

FOREWORD

The American College of Radiology (ACR) and the National Electrical Manufacturers Association (NEMA) formed a joint committee to develop a standard for Digital Imaging and Communications in Medicine (DICOM). This DICOM Standard was developed according to the NEMA procedures.

This standard is developed in liaison with other standardization organizations including CEN TC251 in Europe and JIRA in Japan, with review also by other organizations including IEEE, HL7 and ANSI in the USA.

The DICOM Standard is structured as a multi-part document using the guidelines established in the following document:

— ISO/IEC Directives, 1989 Part 3: Drafting and Presentation of International Standards.

This document is one part of the DICOM Standard which consists of the following parts:

PS 3.1	Introduction and Overview
PS 3.2	Conformance
PS 3.3	Information Object Definitions
PS 3.4	Service Class Specifications
PS 3.5	Data Structures and Encoding
PS 3.6	Data Dictionary
PS 3.7	Message Exchange
PS 3.8	Network Communication Support for Message Exchange
PS 3.9	Retired
PS 3.10	Media Storage and File Format for Media Interchange
PS 3.11	Media Storage Application Profiles
PS 3.12	Media Formats and Physical Media for Media Interchange
PS 3.13	Retired
PS 3.14	Grayscale Standard Display Function
PS 3.15	Security and System Management Profiles
PS 3.16	Content Mapping Resource
PS 3.17	Explanatory Information
PS 3.18	Web Access to DICOM Persistent Objects (WADO)

These parts are related but independent documents. Their development level and approval status may differ. Additional parts may be added to this multi-part standard. PS 3.1 should be used as the base reference for the current parts of this Standard.

Provided by IHS
No reproduction or networking permitted without license from IHS
Not for Resale

1 SCOPE AND FIELD OF APPLICATION

This Part of the DICOM Standard specifies the set of Service Class Definitions which provide an abstract definition of real-world activities applicable to communication of digital medical information. For each Service Class Definition, this Part specifies:

- the semantic description of the activities of the Service Class Definition
- the group of DIMSE Service operations and notifications applicable to the Service Class Description
- one or more functionally-related Service-Object Pair (SOP) Classes which are supported by the Service Class Definition and may be performed between peer DICOM Application Entities
- the relationship of each Service-Object Pair (SOP) Classes to applicable Information Object Definitions specified in PS 3.3.

For each Service Class Definition, this Part does not specify:

- any necessary information for the semantic description of the IOD
- relationships to associated real-world objects relevant to the IOD
- attributes which describe the characteristics of the IOD

This Part is related to other parts of the DICOM Standard in that:

- Part 3, Information Object Definitions, specifies the set of Information Object Definitions to which the services defined in this Part may be applied
- Part 5, Data Structure and Semantics, defines the data encoding used in the DIMSE Protocol when applied to IODs defined in this Part
- Part 6, Data Dictionary, contains an index by Tag of all IOD Attributes defined in this Part. This index includes the Value Representation and Value Multiplicity for each Attribute
- Part 7, Message Exchange Protocol, defines the DIMSE Services and Protocol which may be applied to IODs defined in this Part.

2 NORMATIVE REFERENCES

The following standards contain provisions which, through reference in this text, constitute provisions of this Standard. At the time of publication, the editions indicated were valid. All standards are subject to revision, and parties to agreements based on this Standard are encouraged to investigate the possibilities of applying the most recent editions of the standards indicated below.

ISO/IEC Directives, 1989	Part 3 - Drafting and Presentation of International Standards.
ISO 7498-1 Interconnection-	Information Processing Systems-Open Systems Basic Reference Model
ISO/TR 8509 Interconnection-	Information Processing Systems-Open Systems Service Conventions

Provided by IHS
No reproduction or networking permitted without license from IHS
Not for Resale

3 DEFINITIONS

For the purposes of this Standard the following definitions apply.

3.1 REFERENCE MODEL DEFINITIONS

This Part of the Standard makes use of the following terms defined in ISO 7498-1:

a. Application Entity
b. Service or Layer Service
c. Application Entity Title

3.2 SERVICE CONVENTIONS DEFINITIONS

This Part of the Standard makes use of the following terms defined in ISO/TR 8509:

a. Primitive

3.3 DICOM INTRODUCTION AND OVERVIEW DEFINITIONS

This Part of the Standard makes use of the following terms defined in PS 3.1:

a. Attribute
b. Command
c. Data Dictionary
d. Information Object
e. Message

3.4 DICOM UPPER LAYER SERVICE DEFINITIONS

This Part of the Standard makes use of the following terms defined in PS 3.8:

a. Unique Identifier (UID)
b. DICOM Upper Layer Service

3.5 DICOM MESSAGE EXCHANGE DEFINITIONS

This Part of the Standard makes use of the following terms defined in PS 3.7:

a. DICOM Message Service Element (DIMSE)
b. DIMSE-N Services
c. DIMSE-C Services
d. DIMSE Service Group (DSG)

3.6 DICOM INFORMATION OBJECT DEFINITIONS

This Part of the Standard makes use of the following terms defined in PS 3.3:

a. Attribute Tag
b. Composite IOD
c. DICOM Application Model
d. DICOM Information Model
e. Information Object Definition

Provided by IHS
No reproduction or networking permitted without license from IHS
Not for Resale

f. Module
g. Normalized IOD
h. Functional Group

3.7 DICOM CONFORMANCE

This Part of the Standard makes use of the following terms defined in PS 3.2:

a. Standard SOP Class
b. Specialized SOP Class
c. Conformance Statement

3.8 DICOM DATA STRUCTURES AND ENCODING

This Part of the Standard makes use of the following terms defined in PS 3.5:

a. Data Element
b. Data Set

3.9 DICOM SERVICE CLASS DEFINITIONS

The following definitions are commonly used in this Part of the DICOM Standard:

Combined Print Image: a pixel matrix created by superimposing an image and an overlay, the size of which is defined by the smallest rectangle enclosing the superimposed image and overlay.

DICOM Information Model: an Entity-Relationship diagram which is used to model the relationships between the Information Object Definitions representing classes of Real-World Objects defined by the DICOM Application Model.

DICOM Application Model: an Entity-Relationship diagram used to model the relationships between Real-World Objects which are within the area of interest of the DICOM Standard.

Meta Service-Object Pair (SOP) Class: a pre-defined set of SOP Classes that may be associated under a single SOP for the purpose of negotiating the use of the set with a single item.

Preformatted Grayscale Image: an image where all annotation, graphics, and grayscale transformations (up to and including the VOI LUT) expected in the printed image have been burnt in or applied before being sent to the SCP. It is a displayable image where the polarity of the intended display is specified by Photometric Interpretation (0028,0004).

Preformatted Color Image: an image where all annotation, graphics, and color transformations expected in the printed image have been burnt in or applied before being sent to the SCP.

Real-World Activity: that which exists in the real world which pertains to specific area of information processing within the area of interest of the DICOM Standard. Such a Real-World Activity may be represented by one or more computer information metaphors called SOP Classes.

Real-World Object: that which exists in the real world upon which operations may be performed which are within the area of interest of the DICOM Standard. Such a Real-World Object may be represented through a computer information metaphor called a SOP Instance.

Service Class User: the role played by a DICOM Application Entity (DIMSE-Service-User) which invokes operations and performs notifications on a specific Association.

Provided by IHS
No reproduction or networking permitted without license from IHS
Not for Resale

Service Class Provider: the role played by a DICOM Application Entity (DIMSE-Service-User) which performs operations and invokes notifications on a specific Association.

Service Class: a collection of SOP Classes and/or Meta SOP Classes which are related in that they are described together to accomplish a single application.

Service-Object Pair (SOP) Class: the union of a specific set of DIMSE Services and one related Information Object Definition (as specified by a Service Class Definition) which completely defines a precise context for communication of operations on such an object or notifications about its state.

Service-Object Pair (SOP) Instance: a concrete occurrence of an Information Object that is managed by a DICOM Application Entity and may be operated upon in a communication context defined by a specific set of DIMSE Services (on a network or interchange media). A SOP Instance is persistent beyond the context of its communication.

Related General SOP Class: a SOP Class that is related to another SOP Class as being more generalized in terms of behavior defined in the standard, and which may be used to identically encode an instance with the same attributes and values, other than the SOP Class UID. In particular, this may be the SOP Class from which a Specialized SOP Class (see PS3.2) is derived**.**

3.10 DEVICE INDEPENDENT PIXEL VALUES

This Part of the Standard makes use of the following terms defined in PS 3.3:

a. P-Value
b. PCS-Value

4 SYMBOLS AND ABBREVIATIONS

The following symbols and abbreviations are used in this Part of the DICOM Standard.

ACR	American College of Radiology
ASCII	American Standard Code for Information Interchange
AE	Application Entity
ANSI	American National Standards Institute
CEN TC251	Comité Européen de Normalisation -Technical Committee 251 - Medical Informatics
Chest CAD	Computer-Aided Detection and/or Computer-Aided Diagnosis for chest radiography
DICOM	Digital Imaging and Communications in Medicine
DIMSE	DICOM Message Service Element
DIMSE-C	DICOM Message Service Element-Composite
DIMSE-N	DICOM Message Service Element-Normalized
HL7	Health Level 7
IE	Information Entity
IEEE	Institute of Electrical and Electronics Engineers
IOD	Information Object Definition
IS	Information System
ISO	International Standards Organization

--`,,```,,,,````-`-`,,`,,`,`,,`---

Provided by IHS
No reproduction or networking permitted without license from IHS Not for Resale

JIRA	Japan Industries Association of Radiation Apparatus
JPIP	JPEG 2000 Interactive Protocol
NEMA	National Electrical Manufacturers Association
OSI	Open Systems Interconnection
SCP	Service Class Provider
SCU	Service Class User
SOP	Service-Object Pair
UID	Unique Identifier

5 CONVENTIONS

5.1 ENTITY-RELATIONSHIP MODEL

5.1.1 Entity

An entity is used in an Entity-Relationship (E-R) model to represent a Real-World Object, class of Real-World Objects, or DICOM data representation (such as IOD or Module). An entity is depicted as a box within this Part of the DICOM Standard as shown in Figure 5-1.

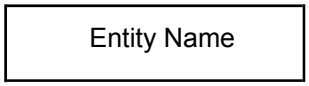

Figure 5-1
ENTITY CONVENTION

5.1.2 Relationship

A relationship, which defines how entities are related, is depicted as a diamond within this Standard as shown in Figure 5-2.

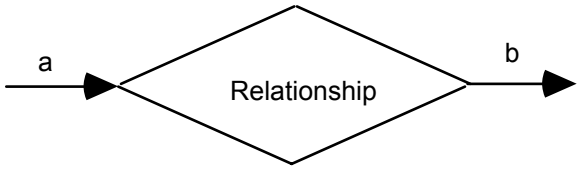

Figure 5-2
RELATIONSHIP CONVENTION

The relationship is read from source to destination entity as indicated by the arrows. The a and b show the source and destination cardinality of the relationship respectively. The following cardinalities are permitted:

a. (a = 1, b = 1)—one source entity is related to one destination entity
b. (a = 1, b = 0-n)—one source entity is related to zero or more destination entities
c. (a = 1, b = 1-n)—one source entity is related to one or more destination entities
d. (a = 1-n, b = 1)—one or more source entities are related to one destination entity

Provided by IHS
No reproduction or networking permitted without license from IHS
Not for Resale

e. (a = 1-n, b = 0-n)—one or more source entities are related to zero or more destination entities

f. (a = 1-n, b = 1-n)—one or more source entities are related to one or more destination entities

In a relationship where (a = 1-n, b = 1-n) the values of the source and destination cardinalities may be different. The value "n" simply denotes one or more.

Note: DICOM has added the use of arrows to the E-R diagramming conventions often used in other literature. This has been done to avoid the possibility of inferring an incorrect relationship which can result from reading a relationship in the reverse order of that intended. For example, a relationship "Cat Catches Mouse" could be read "Mouse Catches Cat" if the arrows were not present.

A relationship may be bi-directional (i.e. the relationship is true in both directions). In such a case, the convention used is arrows pointing toward both the source and the destination entities.

5.2 SEQUENCES

Certain tables in this Part of the DICOM Standard denote a Sequence of Items by using the symbol: '>.'

In Annex A, '>' is used to identify a 'Sequence of Modules.' Nested Sequences of Modules are identified by '>>'. In Annex B and Annex C, '>' is used to identify a 'Sequence of Attributes'. See PS 3.5 for the complete specification of how Sequences of Items shall be encoded.

Note: Information Object Definitions (IODs) which include the Sequence of Module construct are often called folders. The use of 'Sequences of Attributes' is not limited to 'Folders.'

5.3 RESPONSE STATUS VALUES

Certain tables in this Part of the DICOM Standard denote an implementation specific response status code by using the symbol: 'xx' as part of the code.

5.4 USAGE SPECIFICATION

The building blocks of SOP Classes are Modules and DIMSE Services. The DIMSE Services associated with a SOP Class may be Mandatory (M) or Optional (U). The usage may be different for the SCU and SCP. The usage is specified as a pair of letters: the former indicating the SCU usage, the latter indicating the SCP usage.

The meaning and behavior of the usage specification for DIMSE Services are:

M/M The SCU shall support the DIMSE Service but is not required to use it on an Association. The SCP shall support the DIMSE Service.

U/M The SCU may support and use the DIMSE Service. The SCP shall support the DIMSE Service.

U/U The SCU may support and use the DIMSE Service. The SCP may support the DIMSE Service. If the SCP does not support the DIMSE Service used by the SCU, it shall return a Failure status.

Modules and their usage in Composite IODs are defined in PS 3.3. Normalized IODs are also constructed from Modules but usage is specified on an attribute basis in this Part of the DICOM Standard. The following usage specification applies to all Attributes of Normalized IODs unless superseded by a usage specification in a particular SOP Class Specification.

The meaning and behavior of the usage specification for Attributes of Normalized IODs are as follows:

--`,,```,,,,````-`-`,,`,,`,`,,`---

Provided by IHS
No reproduction or networking permitted without license from IHS Not for Resale

1/1 The SCU shall provide a value for the Attribute. If the SCU does not supply a value, the SCP shall return a Failure status ("Missing Attribute," code 0120H). The SCP shall support the Attribute. The SCP shall not support null values (attribute provided with a zero length and no value) for the Attribute.

3/1 The SCU may retrieve or provide a value for the Attribute. The SCP shall support the Attribute. The SCP shall not support null values (attribute provided with a zero length and no value) for the Attribute.

-/1 The SCU's usage of the Attribute is undefined. The SCP shall support the Attribute. The SCP shall not support null values (attribute provided with a zero length and no value) for the Attribute.

2/2 The SCU shall retrieve or provide a value for the Attribute. The SCU shall always provide the attribute but a null value shall be permitted (attribute provided with a zero length and no value). The SCP shall support the Attribute and permit null values (attribute provided with a zero length and no value) for the Attribute.

3/2 The SCU may retrieve or provide a value for the Attribute. The SCP shall support the Attribute and permit null values (attribute provided with a zero length and no value) for the Attribute.

-/2 The SCU's usage of the Attribute is undefined. The SCP shall support the Attribute and permit null values (attribute provided with a zero length and no value) for the Attribute.

3/3 The SCU may retrieve or provide a value for the Attribute. The SCP may support the Attribute. If the SCP does not support the Attribute and it is requested by the SCU, the SCP shall return a Warning status ("Invalid Attribute value", code 0106H). If the SCP does not support the Attribute and the SCU provides it, the attribute shall be ignored.

If the SCP usage type designation is modified by a "C" (e.g., 3/1C) the specification stated above shall be modified to include the requirement that the SCP shall support the Attribute if the specified condition is met.

For all N-CREATE, N-SET, N-GET, N-DELETE, N-ACTION and N-EVENT-REPORT operations, the SOP Class is conveyed in the request primitive in Affected SOP Class UID (0000,0002). The SOP Class UID (0008,0016) Attribute shall not be present in the Data Set.

For N-CREATE operations and N-EVENT-REPORT notifications, the SOP Instance is conveyed in Affected SOP Instance UID (0000,1000). The SOP Instance UID (0008,0018) Attribute shall not be present in the Data Set.

Note: In some Service Classes, the SOP Class definition may override the general provision in PS 3.7 that allows the SOP Instance UID to be specified or omitted in the N-CREATE request primitive, and require that the SCU be responsible for specifying the SOP Instance UID.

For N-SET, N-GET, N-ACTION and N-DELETE operations, the SOP Instance is conveyed in Requested SOP Instance UID (0000,1001). The SOP Instance UID (0008,0018) Attribute shall not be present in the dataset.

6 DICOM INFORMATION MODEL

The DICOM Information Model defines the structure and organization of the information related to the communication of medical images. Figure 6-1 shows the relationships between the major structures of the DICOM Information Model.

Provided by IHS
No reproduction or networking permitted without license from IHS Not for Resale

6.1 INFORMATION OBJECT DEFINITION

An Information Object Definition (IOD) is an object-oriented abstract data model used to specify information about Real-World Objects. An IOD provides communicating Application Entities with a common view of the information to be exchanged.

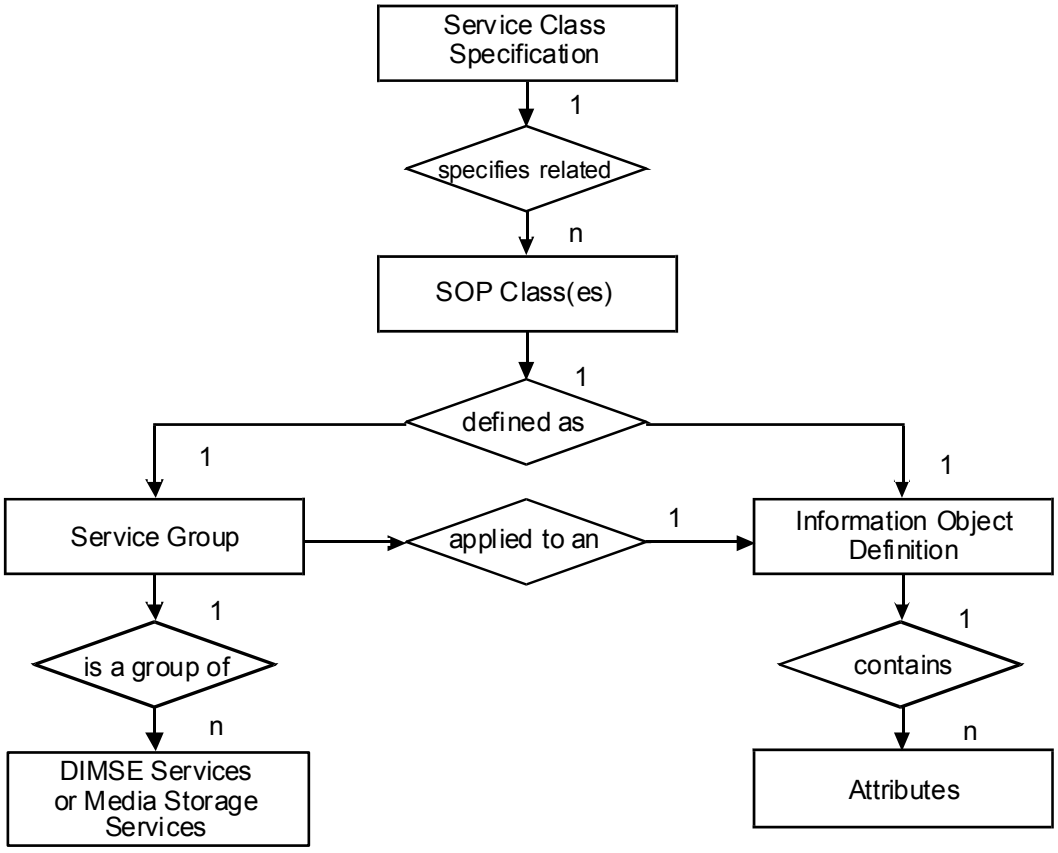

Figure 6-1
MAJOR STRUCTURES OF DICOM INFORMATION MODEL

An IOD does not represent a specific instance of a Real-World Object, but rather a class of Real-World Objects which share the same properties. An IOD used to represent a single class of Real-World Objects is called a Normalized Information Object. An IOD which includes information about related Real-World Objects is called a Composite Information Object.

6.1.1 Composite IOD

A Composite IOD is an Information Object Definition which represents parts of several entities in the DICOM Model of the Real-World. (See PS 3.3.) Such an IOD includes Attributes which are not inherent in the Real-World Object that the IOD represents but rather are inherent in related Real-World Objects.

These related Real-World Objects provide a complete context for the exchanged information. When an instance of a Composite IOD is communicated, this entire context is exchanged between Application Entities. Relationships between Composite IOD Instances shall be conveyed in this contextual information.

Provided by IHS
No reproduction or networking permitted without license from IHS
Not for Resale

Notes: 1. Actual communication of IOD Instances is via SOP Instances.

2. Whenever Composite SOP Instances are in fact related, some of the contextual information is redundant (i.e. the same information about the same Real-World Objects is contained in multiple SOP Instances).

The Composite IODs are specified in PS 3.3.

6.1.2 Normalized IOD

A Normalized IOD is an Information Object Definition which generally represents a single entity in the DICOM Model of the Real-World.

When an instance of a Normalized IOD is communicated, the context for that instance is not actually exchanged. Instead, the context is provided through the use of pointers to related Normalized IOD Instances.

The Normalized IODs are specified in PS 3.3.

6.2 ATTRIBUTES

The Attributes of an IOD describe the properties of a Real-World Object Instance. Related Attributes are grouped into Modules which represents a higher level of semantics documented in the Module Specifications found in PS 3.3.

Attributes are encoded as Data Elements using the rules, the Value Representation and the Value Multiplicity concepts specified in PS 3.5. For specific Data Elements, the Value Representation and Value Multiplicity of Data Elements are specified in the Data Dictionary in PS 3.6.

6.3 ON-LINE COMMUNICATION AND MEDIA STORAGE SERVICES

For on-line communication the DIMSE Services allow a DICOM Application Entity to invoke an operation or notification across a network or a point-to-point interface. DIMSE Services are defined in PS 3.7.

For media storage interchange, Media Storage Services allow a DICOM Application Entity to invoke media storage related operations.

Media Storage Services are discussed in PS 3.10.

6.3.1 DIMSE-C Services

DIMSE-C Services are services applicable only to a Composite IOD. DIMSE-C provides only operation services.

6.3.2 DIMSE-N Services

DIMSE-N Services are services applicable only to a Normalized IOD. DIMSE-N provides both operation and notification services.

6.4 DIMSE SERVICE GROUP

A DIMSE Service Group specifies one or more operations/notifications defined in PS 3.7 which are applicable to an IOD.

DIMSE Service Groups are defined in this Part of the DICOM Standard, in the specification of a Service-Object Pair Class.

Provided by IHS
No reproduction or networking permitted without license from IHS
Not for Resale

6.5 SERVICE-OBJECT PAIR (SOP) CLASS

A Service-Object Pair (SOP) Class is defined by the union of an IOD and a DIMSE Service Group. The SOP Class definition contains the rules and semantics which may restrict the use of the services in the DIMSE Service Group or the Attributes of the IOD.

The selection of SOP Classes is used by Application Entities to establish an agreed set of capabilities to support their interaction. This negotiation is performed at Association establishment time as described in PS 3.7. An extended negotiation allows Application Entities to further agree on specific options within a SOP Class.

Note: The SOP Class as defined in the DICOM Information Model is equivalent in ISO/OSI terminology to the Managed Object Class. Readers familiar with object oriented terminology will recognize the SOP Class operations (and notifications) as comprising the methods of an object class.

6.5.1 Normalized and Composite SOP Classes

DICOM defines two types of SOP Classes, Normalized and Composite. Normalized SOP Classes are defined as the union of a Normalized IOD and a set of DIMSE-N Services. Composite SOP Classes are defined as the union of a Composite IOD and a set of DIMSE-C Services.

Note: SOP Class Specifications play a central role for defining DICOM conformance requirements. It allows DICOM Application Entities to select a well-defined application level subset of this Standard to which they may claim conformance. See PS 3.2.

6.6 ASSOCIATION NEGOTIATION

Association establishment is the first phase of communication between peer DICOM compliant Application Entities. The Application Entities shall use Association establishment to negotiate which SOP Classes can be exchanged and how this data will be encoded.

Association Negotiation is defined in PS 3.7.

6.7 SERVICE CLASS SPECIFICATION

A Service Class Specification defines a group of one or more SOP Classes related to a specific function which is to be accomplished by communicating Application Entities. A Service Class Specification also defines rules which allow implementations to state some pre-defined level of conformance to one or more SOP Classes. Applications may conform to SOP Classes as either a Service Class User (SCU) or Service Class Provider (SCP).

Service Class Specifications are defined in this Part of the DICOM Standard.

Note: Such interaction between peer Application Entities work on a 'client/server model.' The SCU acts as the 'client,' while the SCP acts as the 'server'. The SCU/SCP roles are determined during Association establishment.

7 DICOM MODEL OF THE REAL WORLD

The DICOM view of the Real-World which identifies the relevant Real-World Objects and their relationships within the scope of the DICOM Standard is described in the DICOM Model of the Real-World Section of PS 3.3.

This section also describes the DICOM Information Model which identifies the various IODs specified by the DICOM Standard and their relationship.

--`,,```,,,,````-`-`,,`,,`,`,,`---

Provided by IHS
No reproduction or networking permitted without license from IHS Not for Resale

Annex A VERIFICATION SERVICE CLASS (Normative)

A.1 OVERVIEW

A.1.1 Scope

The Verification Service Class defines a service which verifies application level communication between peer DICOM AEs. This verification is accomplished on an established Association using the C-ECHO DIMSE-C service.

A.2 SCU/SCP BEHAVIOR

A DICOM AE, supporting the Verification SOP Class SCU role, requests verification of communication to a remote DICOM AE. This request is performed using the C-ECHO request primitive. The remote DICOM AE, supporting the Verification SOP Class SCP role, issues an C-ECHO response primitive. Upon receipt of the C-ECHO confirmation, the SCU determines that verification is complete. See PS 3.7 for the specification of the C-ECHO primitives.

A.3 DIMSE-C SERVICE GROUP

The C-ECHO DIMSE-C service shall be the mechanism used to verify communications between peer DICOM AEs. The C-ECHO service and protocol parameters shall be required as defined in PS 3.7.

A.4 VERIFICATION SOP CLASS

The Verification SOP Class consists of the C-ECHO DIMSE-C service. No associated Information Object Definition is defined. The SOP Class UID shall be "1.2.840.10008.1.1".

No Specialized SOP Classes and/or Meta SOP Classes shall be defined for the Verification SOP Class.

A.5 ASSOCIATION NEGOTIATION

Association establishment is the first phase of any instance of communication between peer DICOM AEs. The following negotiation rules apply to DICOM AEs which support the Verification SOP Class

- The Association-requester (verification SCU role) in the A-ASSOCIATE request shall convey an Abstract Syntax, in a Presentation Context, for the Verification SOP Class. The Abstract Syntax Name shall be equivalent to the Verification SOP Class UID.
- The Association-acceptor (verification SCP role) in the A-ASSOCIATE response shall accept the Abstract Syntax, in a Presentation Context, for the supported Verification SOP Class.

No Application Association Information specific to the Verification SOP Class shall be used.

A.6 CONFORMANCE

A.6.1 Conformance supporting the SCU role

Implementations which conform to the Verification SOP Class SCU role shall meet the:

- C-ECHO service requirements as defined by the DIMSE Service Group, Section A.3
- Association negotiation rules as defined in Section A.5

Provided by IHS
No reproduction or networking permitted without license from IHS Not for Resale

A.6.2 Conformance Supporting the SCP Role

Implementations which conform to the Verification SOP Class SCP role shall meet the:

— C-ECHO operation rules as defined by the DIMSE Service Group, Section A.3
— Association negotiation rules as defined in Section A.5

A.6.3 Conformance statement

An implementation may conform to the Verification SOP Class as an SCU, SCP, or both. The Conformance Statement shall be in the format defined in PS 3.2.

Provided by IHS
No reproduction or networking permitted without license from IHS
Not for Resale

Annex B STORAGE SERVICE CLASS (Normative)

B.1 OVERVIEW

B.1.1 Scope

The Storage Service Class defines an application-level class-of-service which facilitates the simple transfer of information Instances (objects).. It allows one DICOM AE to send images, waveforms, reports, etc., to another.

Information Object Definitions for Instances that are transferred under the Storage Service Class shall adhere to the Composite Instance IOD Information Model specified in PS3.3, and include at least the Patient, Study, and Series Information Entities.

B.1.2 Service Definition

Two peer DICOM AEs implement a SOP Class of the Storage Service Class with one serving in the SCU role and one serving in the SCP role. SOP Classes of the Storage Service Class are implemented using the C-STORE DIMSE-C service. C-STORE is described in PS 3.7. A successful completion of the C-STORE has the following semantics:

— Both the SCU and the SCP support the type of information to be stored.
— The information is stored in some medium.
— For some time frame, the information may be accessed.

Notes: 1. Support for Storage SOP Classes does not necessarily involve support for SOP Classes of the Query/Retrieve Service Class. How the information may be accessed is implementation dependent. It is required that some access method exists. This method may require an implementation dependent operation at the SCP of the Storage Service Class. The duration of the storage is also implementation dependent, but is described in the Conformance Statement of the SCP. Storage SOP Classes are intended to be used in a variety of environments: e.g. for modalities to transfer images to workstations or archives, for archives to transfer images to workstations or back to modalities, for workstations to transfer processed images to archives, etc.

2. For the JPIP Referenced Pixel Data transfer syntaxes, transfers may result in storage of incomplete information in that the pixel data may be partially or completely transferred by some other mechanism at the discretion of the SCP.

B.2 BEHAVIOR

This Section discusses the SCU and SCP behavior for SOP Classes of the Storage Service Class. The C-STORE DIMSE-C Service shall be the mechanism used to transfer SOP Instances between peer DICOM AEs as described in PS 3.7.

B.2.1 Behavior of an SCU

The SCU invokes a C-STORE DIMSE Service with a SOP Instance which meets the requirements of the corresponding IOD. The SCU shall recognize the status of the C-STORE service and take appropriate action upon the success or failure of the service.

Notes: 1. The appropriate action is implementation dependent. It is required that the SCU distinguish between successful and failed C-STORE responses. Appropriate action may differ according to application, but are described in the Conformance Statement of the SCU.

2. An SCU that is also an SCU of the Detached Study Management SOP Class is required to meet special requirements for mapping study identification information as specified in Annex F.

Provided by IHS
No reproduction or networking permitted without license from IHS
Not for Resale

B.2.2 Behavior of an SCP

An SCP of a Storage SOP Class acts as a performing DIMSE-service-user for the C-STORE Service. By performing this service successfully, the SCP indicates that the SOP Instance has been successfully stored.

B.2.3 Statuses

Table B.2-1 defines the specific status code values which might be returned in a C-STORE response. General status code values and fields related to status code values are defined in PS 3.7.

Table B.2-1
C-STORE STATUS

Service Status	Further Meaning	Status Codes	Related Fields
Failure	Refused: Out of Resources	A7xx	(0000,0902)
	Error: Data Set does not match SOP Class	A9xx	(0000,0901) (0000,0902)
	Error: Cannot understand	Cxxx	(0000,0901) (0000,0902)
Warning	Coercion of Data Elements	B000	(0000,0901) (0000,0902)
	Data Set does not match SOP Class	B007	(0000,0901) (0000,0902)
	Elements Discarded	B006	(0000,0901) (0000,0902)
Success		0000	None

B.3 ASSOCIATION NEGOTIATION

SCUs and SCPs of Storage SOP Classes operate on SOP Instances specific to the SOP Class. They may use the SOP Class Extended Negotiation Sub-Item defined in PS 3.7. This Sub-Item allows DICOM AEs to exchange application information specific to SOP Class specifications. This is achieved by defining the Service-class-application-information field.

SCUs may use the SOP Class Common Extended Negotiation Sub-Item defined in PS 3.7. This Sub-Item allows DICOM AEs to exchange information about the nature of the SOP Classes.

The SOP Class Extended Negotiation Sub-Item and SOP Class Common Extended Negotiation Sub-Item negotiation is optional for storage based SOP Classes.

The following negotiation rules apply to all DICOM SOP Classes and Specialized SOP Classes of the Storage Service Class.

The Association-requester (Storage SCU role) in the A-ASSOCIATE request shall convey:

— one Abstract Syntax, in a Presentation Context, for each supported SOP Class of the Storage Service Class
— optionally, one SOP Class Extended Negotiation Sub-Item, for each supported SOP Class of the Storage Service Class

--`,,```,,,,````-`-`,,`,,`,`,,`---

Provided by IHS
No reproduction or networking permitted without license from IHS Not for Resale

— optionally, one SOP Class Common Extended Negotiation Sub-Item, for each supported SOP Class of the Storage Service Class

The Association-acceptor (Storage SCP role) in the A-ASSOCIATE request shall accept:

— one Abstract Syntax, in a Presentation Context, for each supported SOP Class of the Storage Service Class
— optionally, one SOP Class Extended Negotiation Sub-Item, for each supported SOP Class of the Storage Service Class

B.3.1 Extended Negotiation

At the time of Association establishment implementations may exchange information about their respective capabilities, as described in PS 3.7 and PS 3.8. SCUs and SCPs may use the SOP Class Extended Negotiation Sub-Item Structure as described in PS 3.7 to exchange information about the level of conformance and options supported. SCUs may use the SOP Class Common Extended Negotiation Sub-Item defined in PS 3.7 to exchange information about the nature of the SOP Classes.

Extended negotiation is optional. In the event that either the SCU or the SCP does not support extended negotiation, the defaults shall apply.

B.3.1.1 Service-Class-Application-Information (A-ASSOCIATE-RQ)

The SOP Class Extended Negotiation Sub-item is made of a sequence of mandatory fields as defined by PS 3.7. Table B.3-1 shows the format of the Service-class-application-information field of the SOP Class Extended Negotiation Sub-Item for SOP Classes of the Storage Service Class in the A-ASSOCIATE-RQ.

Table B.3-1
SERVICE-CLASS-APPLICATION-INFORMATION (A-ASSOCIATE-RQ)

Item Bytes	Field Name	Description of Field
1	Level of support	This byte field defines the supported storage level of the Association-requester. It shall be encoded as an unsigned binary integer and shall use one of the following values: 0 - level 0 SCP 1 - level 1 SCP 2 - level 2 SCP 3 - N/A Association-requester is SCU only If extended negotiation is not supported, the default shall have a value of 3.
2	Reserved	This reserved field shall be sent with a value 00H but not tested to this value when received.
3	Level of Digital Signature support	A Level 2 SCP may further define its behavior in this byte field. 0 – The signature level is unspecified, the AE is an SCU only, or the AE is not a level 2 SCP 1 – signature level 1 2 – signature level 2 3 – signature level 3 If extended negotiation is not supported, the default shall have a value of 0.
4	Reserved	This reserved field shall be sent with a value 00H but

Provided by IHS
No reproduction or networking permitted without license from IHS
Not for Resale

		not tested to this value when received.
5	Element Coercion	This byte field defines whether the Association-requester may coerce Data Elements. It shall be encoded as an unsigned binary integer and shall use one of the following values: 0 - does not coerce any Data Element 1 - may coerce Data Elements 2 - N/A - Association-requester is SCU only If extended negotiation is not supported, the default shall have a value of 2.
6	Reserved	This reserved field shall be sent with a value 00H but not tested to this value when received.

B.3.1.2 Service-Class-Application-Information (A-ASSOCIATE-AC)

The SOP Class Extended Negotiation Sub-item is made of a sequence of mandatory fields as defined by PS 3.7. Table B.3-2 shows the format of the Service-class-application-information field of the SOP Class Extended Negotiation Sub-Item for SOP Classes of the Storage Service Class in the A-ASSOCIATE-AC.

Table B.3-2
SERVICE-CLASS-APPLICATION-INFORMATION (A-ASSOCIATE-AC)

Item Bytes	Field Name	Description of Field
1	Level of support	This byte field defines the supported storage level of the Association-acceptor. It shall be encoded as an unsigned binary integer and shall use one of the following values: 0 - level 0 SCP 1 - level 1 SCP 2 - level 2 SCP 3 - N/A - Association-acceptor is SCU only If extended negotiation is not supported, no assumptions shall be made by the Association-requester about the capabilities of the Association-acceptor based upon this extended negotiation.
2	Reserved	This reserved field shall be sent with a value 00H but not tested to this value when received.
3	Level of Digital Signature support	A Level 2 SCP may further define its behavior in this byte field. 0 – The signature level is unspecified, the AE is an SCU only, or the AE is not a level 2 SCP 1 – signature level 1 2 – signature level 2 3 – signature level 3 If extended negotiation is not supported, no assumptions shall be made by the Association-requester about the capabilities of the Association-acceptor based upon this extended negotiation.
4	Reserved	This reserved field shall be sent with a value 00H but not tested to this value when received.

--`,,```,,,,````-`-`,,`,,`,`,,`---

Provided by IHS
No reproduction or networking permitted without license from IHS
Not for Resale

5	Element Coercion	This byte field defines whether the Association-acceptor may coerce Data Elements. It shall be encoded as an unsigned binary integer and shall use one of the following values: 0 - does not coerce any Data Element 1 - may coerce Data Elements 2 - N/A - Association-acceptor is SCU only If extended negotiation is not supported, no assumptions shall be made by the Association-requester about the capabilities of the Association-acceptor based upon this extended negotiation.
6	Reserved	This reserved field shall be sent with a value 00H but not tested to this value when received.

B.3.1.3 Service Class UID (A-ASSOCIATE-RQ)

SOP Class Common Extended Negotiation Sub-Item allows the SCU to convey the Service Class UID of each proposed SOP Class.

The Storage Service Class UID shall be "1.2.840.10008.4.2".

B.3.1.4 Related General SOP Classes (A-ASSOCIATE-RQ)

A limited set of Standard SOP Classes in the Storage Service Class are defined to have one or more Related General SOP Classes. The Related General SOP Classes may be conveyed using the SOP Class Relationship Extended Negotiation during association establishment as defined in PS 3.7. Table B.3-3 identifies which Standard SOP Classes participate in this mechanism. If a Standard SOP Class is not listed in this table, Related General SOP Classes shall not be included in a Related Storage SOP Class Extended Negotiation Sub-Item.

Note: Implementation-defined Specialized SOP Classes (see PS3.2) of the Storage Service Class may convey a Related General SOP Class.

Table B.3-3
STANDARD AND RELATED GENERAL SOP CLASSES

SOP Class Name	Related General SOP Class Name
12-lead ECG Waveform Storage	General ECG Waveform Storage
Digital Mammography Image Storage - For Presentation	Digital X-Ray Image Storage - For Presentation
Digital Mammography Image Storage - For Processing	Digital X-Ray Image Storage - For Processing
Digital Intra-oral X-Ray Image Storage - For Presentation	Digital X-Ray Image Storage - For Presentation
Digital Intra-oral X-Ray Image Storage - For Processing	Digital X-Ray Image Storage - For Processing
Basic Text SR	Enhanced SR
	Comprehensive SR
Enhanced SR	Comprehensive SR
Procedure Log	Enhanced SR
	Comprehensive SR

Provided by IHS
No reproduction or networking permitted without license from IHS
Not for Resale

X-Ray Radiation Dose SR	Enhanced SR
	Comprehensive SR

B.4 CONFORMANCE

An implementation which conforms to Storage SOP Classes shall meet the:

— C-STORE Service requirements as defined in Section B.2
— Association requirements as defined in Section B.3

Note: No SCU or SCP behavior requirements other than those in this section are specified. In particular, an SCP of the Storage SOP Classes may not attach any significance to the particular association or associations over which C-STORE operations are requested, nor the order in which C-STORE operations occur within an association. No constraints are placed on the operations an SCU may perform during any particular association, other than those defined during association negotiation. An SCP may not expect an SCU to perform C-STORE operations in a particular order.

Similarly, no semantics are attached to the closing of an Association, such as the end of a Study or Performed Procedure Step.

B.4.1 Conformance as An SCP

Three levels of conformance to the Storage SOP Classes as an SCP may be provided:

— Level 0 (Local). Level 0 conformance indicates that a user defined subset of the Attributes of the image will be stored, and all others will be discarded. This subset of the Attributes shall be defined in the Conformance Statement of the implementor.
— Level 1 (Base). Level 1 conformance indicates that all Type 1 and 2 Attributes defined in the IOD associated with the SOP Class will be stored, and may be accessed. All other elements may be discarded. The SCP may, but is not required to validate that the Attributes of the SOP Instance meets the requirements of the IOD.
— Level 2 (Full). Level 2 conformance indicates that all Type 1, Type 2, and Type 3 Attributes defined in the Information Object Definition associated with the SOP Class, as well as any Standard Extended attributes (including Private Attributes) included in the SOP Instance, will be stored and may be accessed. The SCP may, but is not required to validate that the Attributes of the SOP Instance meet the requirements of the IOD.

An SCP that claims conformance to Level 2 (Full) support of the Storage Service Class may accept any Presentation Context negotiation of a SOP Class that specifies the Storage Service Class during the SOP Class Common Extended Negotiation, without asserting conformance to that SOP Class in its Conformance Statement.

Note: The SCP may support storage of all SOP Classes of the Storage Service Class, preserving all attributes as a Level 2 SCP.

An SCP that claims conformance to Level 2 (Full) support of a Related General SOP Class may accept any Presentation Context negotiation of a SOP Class that specifies that Related General SOP Class during the SOP Class Common Extended Negotiation, without asserting conformance to that specialized SOP Class in its Conformance Statement.

Notes: 1. The term “specialized” in this section is used generically, including both Implementation-defined Specialized SOP Classes and Standard SOP Classes specified in Table B.3-3.

2. The SCP may handle instances of such specialized SOP Classes using the semantics of the Related General SOP Class, but preserving all additional (potentially Type 1 or 2) attributes as a Level 2 SCP.

Provided by IHS
No reproduction or networking permitted without license from IHS Not for Resale

At any level of conformance, the SCP of the Storage Service Class may modify the values of certain Attributes in order to coerce the SOP Instance into the Query Model of the SCP. The Attributes which may be modified are shown in Table B.4-1.

Table B.4-1
Attributes Subject to Coercion

Attribute	Tag
Patient ID	(0010,0020)
Study Instance UID	(0020,000D)
Series Instance UID	(0020,000E)

If an SCP performs such a modification, it shall return a C-STORE response with a status of Warning.

Notes 1. Modification of these Attributes may be necessary if the SCP is also an SCP of a Query/Retrieve SOP Classes. These SOP Classes are described in this Standard. For example, an MR scanner may be implemented to generate Study Instance UIDs for images generated on the MR. When these images are sent to an archive which is HIS/RIS aware, it may choose to change the UID of the study assigned to the study by the PACS. The mechanism by which it performs this coercion is implementation dependent.

2. Other Attributes may be modified/corrected by an SCP of a Storage SOP Class.

Three levels of Digital Signature support are defined for an SCP which claims conformance to Level 2 (Full) storage support:

Signature Level 1. SCP may not preserve Digital Signatures and does not replace them.

Signature Level 2. SCP does not preserve the integrity of incoming Digital Signatures, but does validate the signatures of SOP Instances being stored, takes implementation-specific measures for insuring the integrity of data stored, and will add replacement Digital Signatures before sending SOP Instances elsewhere.

Signature Level 3. SCP does preserve the integrity of incoming Digital Signatures (i.e. is bit-preserving and stores and retrieves all Attributes regardless of whether they are defined in the IOD).

B.4.2 Conformance as An SCU

The SCU shall generate only C-STORE requests with SOP Instances which meet the requirements of the IOD associated with the SOP Class.

B.4.2.1 SCU Fall-Back Behavior

During Association Negotiation, an application may propose a specialized SOP Class and its related general SOP Class in separate Presentation Contexts as a Storage SCU. If the Association Acceptor rejects the specialized SOP Class Presentation Context, but accepts the related general SOP Class Presentation Context, the application may send instances of the specialized SOP Class as instances of the related general SOP Class. In this fall-back behavior, the SOP Class UID of the instance shall be the UID of the related general SOP Class, and any special semantics associated with the specialized SOP Class may be lost; the SOP Instance UID shall remain the same.

Note: The SCU may include the SOP Class UID of the original intended specialized SOP Class in the attribute Original Specialized SOP Class UID (0008,001B) of the instance sent under the related general SOP Class. In some cases, e.g., when all intermediate storage applications are Level 2 SCPs, this may allow an ultimate receiver of the instance to recast it as an instance of the specialized SOP Class IOD. However, this transformation is not guaranteed.

--`,,```,,,,````-`-`,,`,,`,`,,`---

Provided by IHS
No reproduction or networking permitted without license from IHS Not for Resale

B.4.3 Conformance Statement Requirements

An implementation may conform to a SOP Class of the Storage Service Class as an SCU, SCP or both. The Conformance Statement shall be in the format defined in PS 3.2.

B.4.3.1 Conformance Statement for An SCU

The following issues shall be documented in the Conformance Statement of any implementation claiming conformance to the Storage SOP Class as an SCU:

- The behavior of the SCU in the case of a successful C-STORE response status shall be described.
- The behavior of the SCU in each case of an unsuccessful C-STORE response status shall be described.
- The behavior of the SCU in the case of a Warning status received in response to a C-STORE operation.
- Whether extended negotiation is supported.
- The optional elements which may be included in Storage SOP Instances for each IOD supported shall be listed.
- The standard and privately defined Functional Groups which may be included in Storage SOP Instances for each Multi-frame IOD that support Functional Groups.
- The behavior of the SCU in the case of a C-STORE operation using a referenced pixel data transfer syntax such as JPIP Referenced Pixel Data Transfer Syntax shall be described. This includes the duration of validity of the reference

B.4.3.2 Conformance Statement for An SCP

The following issues shall be documented in the Conformance Statement of any implementation claiming conformance to the Storage Service Class as an SCP:

- The level of conformance, as defined by Section B.4.1, shall be stated.
- The level of Digital Signature support, as defined by Section B.4.1, shall be stated.
- The optional elements which will be discarded (if any) shall be listed for each IOD supported.
- The Conformance Statement shall document the policies concerning the Attribute Lossy Image Compression (0028,2110).
- The behavior of the SCP in the case of a successful C-STORE operation shall be described. This includes the following:
  - the access method for a stored SOP Instance
  - the duration of the storage
- The meaning of each case of an unsuccessful C-STORE response status shall be described, as well as appropriate recovery action.
- The meaning of each case of a warning C-STORE response status shall be described, as well as appropriate action.
- If the SCP performs coercion on any Attributes, this shall be stated, and the conditions under which it may occur shall be described.

B.4.4 Specialized Conformance

Implementations may provide Specialized SOP Class conformance by providing a proper superset of the SOP Instances to be stored. Implementations providing Specialized SOP Class Conformance to one of the SOP Classes defined in this Annex shall be conformant as described in the following sections and shall include within their Conformance Statement information as described in the following sections.

--`,,```,,,,````-`-`,,`,,`,`,,`---

Provided by IHS
No reproduction or networking permitted without license from IHS Not for Resale

An implementation shall be permitted to conform as a Specialization of the standard SOP Class as an SCU, SCP or both. The Conformance Statement shall be in the format defined in PS 3.2.

B.4.4.1 Specialized SOP Class Identification

Any implementation which specializes the standard SOP Class shall define its specialization as an Allomorphic subclass of the standard SOP Class. As such, the specialization shall have its own unique SOP Class identification.

The Conformance Statement shall include a SOP Class Identification Statement as defined in PS 3.2, declaring a SOP Name and SOP Class UID which identify the Specialized SOP Class. The SOP Name is not guaranteed to be unique (unless the implementor chooses to copyright it) but is provided for informal identification of the SOP Class. The SOP Class UID shall uniquely identify the Specialized SOP Class and conform to the DICOM UID requirements as specified in PS 3.5.

B.4.4.2 Specialized Information Object Definition

The standard SOP Class may be specialized by supporting additional private Attributes. The SCU Operations Statement shall describe these specializations and be formatted as defined in PS 3.2. Following this statement shall be the list of Attributes which may be sent or stored with SOP Instances.

B.5 STANDARD SOP CLASSES

The SOP Classes in the Storage Service Class identify the Composite IODs to be stored. Table B.5-1 identifies Standard SOP Classes.

Table B.5-1
STANDARD SOP CLASSES

SOP Class Name	SOP Class UID	IOD Specification (defined in PS 3.3)
Computed Radiography Image Storage	1.2.840.10008.5.1.4.1.1.1	
Digital X-Ray Image Storage - For Presentation	1.2.840.10008.5.1.4.1.1.1.1	DX IOD (see B.5.1.1)
Digital X-Ray Image Storage - For Processing	1.2.840.10008.5.1.4.1.1.1.1.1	DX IOD (see B.5.1.1)
Digital Mammography Image Storage - For Presentation	1.2.840.10008.5.1.4.1.1.1.2	Digital Mammography IOD (see B.5.1.2)
Digital Mammography Image Storage - For Processing	1.2.840.10008.5.1.4.1.1.1.2.1	Digital Mammography IOD (see B.5.1.2)
Digital Intra-oral X-Ray Image Storage - For Presentation	1.2.840.10008.5.1.4.1.1.1.3	Digital Intra-oral X-Ray IOD (see B.5.1.3)
Digital Intra-oral X-Ray Image Storage - For Processing	1.2.840.10008.5.1.4.1.1.1.3.1	Digital Intra-oral X-Ray IOD (see B.5.1.3)
CT Image Storage	1.2.840.10008.5.1.4.1.1.2	
Enhanced CT Image Storage	1.2.840.10008.5.1.4.1.1.2.1	Enhanced CT Image (see B.5.1.7)
Ultrasound Multi-frame Image Storage	1.2.840.10008.5.1.4.1.1.3.1	
MR Image Storage	1.2.840.10008.5.1.4.1.1.4	
Enhanced MR Image Storage	1.2.840.10008.5.1.4.1.1.4.1	Enhanced MR Image (see B.5.1.6)

Provided by IHS
No reproduction or networking permitted without license from IHS
Not for Resale

MR Spectroscopy Storage	1.2.840.10008.5.1.4.1.1.4.2	MR Spectroscopy
Ultrasound Image Storage	1.2.840.10008.5.1.4.1.1.6.1	
Secondary Capture Image Storage	1.2.840.10008.5.1.4.1.1.7	
Multi-frame Single Bit Secondary Capture Image Storage	1.2.840.10008.5.1.4.1.1.7.1	Multi-frame Single Bit Secondary Capture Image
Multi-frame Grayscale Byte Secondary Capture Image Storage	1.2.840.10008.5.1.4.1.1.7.2	Multi-frame Grayscale Byte Secondary Capture Image
Multi-frame Grayscale Word Secondary Capture Image Storage	1.2.840.10008.5.1.4.1.1.7.3	Multi-frame Grayscale Word Secondary Capture Image
Multi-frame True Color Secondary Capture Image Storage	1.2.840.10008.5.1.4.1.1.7.4	Multi-frame True Color Secondary Capture Image
12-lead ECG Waveform Storage	1.2.840.10008.5.1.4.1.1.9.1.1	12-lead ECG Waveform
General ECG Waveform Storage	1.2.840.10008.5.1.4.1.1.9.1.2	General ECG Waveform
Ambulatory ECG Waveform Storage	1.2.840.10008.5.1.4.1.1.9.1.3	Ambulatory ECG Waveform
Hemodynamic Waveform Storage	1.2.840.10008.5.1.4.1.1.9.2.1	Hemodynamic Waveform
Cardiac Electrophysiology Waveform Storage	1.2.840.10008.5.1.4.1.1.9.3.1	Cardiac Electrophysiology Waveform
Basic Voice Audio Waveform Storage	1.2.840.10008.5.1.4.1.1.9.4.1	Basic Voice Audio Waveform
Grayscale Softcopy Presentation State Storage	1.2.840.10008.5.1.4.1.1.11.1	Grayscale Softcopy Presentation State Storage
Color Softcopy Presentation State Storage	1.2.840.10008.5.1.4.1.1.11.2	Color Softcopy Presentation State
Pseudo-Color Softcopy Presentation State Storage	1.2.840.10008.5.1.4.1.1.11.3	Pseudo-Color Softcopy Presentation State
Blending Softcopy Presentation State Storage	1.2.840.10008.5.1.4.1.1.11.4	Blending Softcopy Presentation State
X-Ray Angiographic Image Storage	1.2.840.10008.5.1.4.1.1.12.1	
Enhanced XA Image Storage	1.2.840.10008.5.1.4.1.1.12.1.1	
X-Ray Radiofluoroscopic Image Storage	1.2.840.10008.5.1.4.1.1.12.2	
Enhanced XRF Image Storage	1.2.840.10008.5.1.4.1.1.12.2.1	
Nuclear Medicine Image Storage	1.2.840.10008.5.1.4.1.1.20	
Raw Data Storage	1.2.840.10008.5.1.4.1.1.66	Raw Data

Provided by IHS
No reproduction or networking permitted without license from IHS
Not for Resale

Spatial Registration Storage	1.2.840.10008.5.1.4.1.1.66.1	Spatial Registration
Spatial Fiducials Storage	1.2.840.10008.5.1.4.1.1.66.2	Spatial Fiducials
Real World Value Mapping Storage	1.2.840.10008.5.1.4.1.1.67	Real World Value Mapping
VL Endoscopic Image Storage	1.2.840.10008.5.1.4.1.1.77.1.1	VL Endoscopic Image
Video Endoscopic Image Storage	1.2.840.10008.5.1.4.1.1.77.1.1.1	Video Endoscopic Image
VL Microscopic Image Storage	1.2.840.10008.5.1.4.1.1.77.1.2	VL Microscopic Image
Video Microscopic Image Storage	1.2.840.10008.5.1.4.1.1.77.1.2.1	Video Microscopic Image
VL Slide-Coordinates Microscopic Image Storage	1.2.840.10008.5.1.4.1.1.77.1.3	VL Slide-Coordinates Microscopic Image
VL Photographic Image Storage	1.2.840.10008.5.1.4.1.1.77.1.4	VL Photographic Image
Video Photographic Image Storage	1.2.840.10008.5.1.4.1.1.77.1.4.1	Video Photographic Image
Ophthalmic Photography 8 Bit Image Storage	1.2.840.10008.5.1.4.1.1.77.1.5.1	Ophthalmic Photography 8 Bit Image
Ophthalmic Photography 16 Bit Image Storage	1.2.840.10008.5.1.4.1.1.77.1.5.2	Ophthalmic Photography 16 Bit Image
Stereometric Relationship Storage	1.2.840.10008.5.1.4.1.1.77.1.5.3	Stereometric Relationship
Basic Text SR	1.2.840.10008.5.1.4.1.1.88.11	Basic Text SR
Enhanced SR	1.2.840.10008.5.1.4.1.1.88.22	Enhanced SR
Comprehensive SR	1.2.840.10008.5.1.4.1.1.88.33	Comprehensive SR
Procedure Log	1.2.840.10008.5.1.4.1.1.88.40	Procedure Log
Mammography CAD SR	1.2.840.10008.5.1.4.1.1.88.50	Mammography CAD SR IOD
Key Object Selection	1.2.840.10008.5.1.4.1.1.88.59	Key Object Selection Document
Chest CAD SR	1.2.840.10008.5.1.4.1.1.88.65	Chest CAD SR IOD
X-Ray Radiation Dose SR	1.2.840.10008.5.1.4.1.1.88.67	X-Ray Radiation Dose SR
Encapsulated PDF Storage	1.2.840.10008.5.1.4.1.1.104.1	Encapsulated PDF IOD
Positron Emission Tomography Image Storage	1.2.840.10008.5.1.4.1.1.128	
RT Image Storage	1.2.840.10008.5.1.4.1.1.481.1	
RT Dose Storage	1.2.840.10008.5.1.4.1.1.481.2	
RT Structure Set Storage	1.2.840.10008.5.1.4.1.1.481.3	
RT Beams Treatment Record Storage	1.2.840.10008.5.1.4.1.1.481.4	
RT Plan Storage	1.2.840.10008.5.1.4.1.1.481.5	
RT Brachy Treatment Record Storage	1.2.840.10008.5.1.4.1.1.481.6	

--`,,```,,,,````-`-`,,`,,`,`,,`---

Provided by IHS
No reproduction or networking permitted without license from IHS
Not for Resale

RT Treatment Summary Record Storage	1.2.840.10008.5.1.4.1.1.481.7	
RT Ion Plan Storage	1.2.840.10008.5.1.4.1.1.481.8	IOD defined in PS 3.3
RT Ion Beams Treatment Record Storage	1.2.840.10008.5.1.4.1.1.481.9	IOD defined in PS 3.3

B.5.1 Specialization for Standard SOP Classes

B.5.1.1 Digital X-Ray Image Storage SOP Classes

The Digital X-Ray Image Storage - For Presentation SOP Class shall use the DX IOD with an Enumerated Value of FOR PRESENTATION for Presentation Intent Type (0008,0068).

The Digital X-Ray Image Storage - For Processing SOP Class shall use the DX IOD with an Enumerated Value of FOR PROCESSING for Presentation Intent Type (0008,0068).

An SCU or SCP of the Digital X-Ray Image Storage - For Processing SOP Class shall also support the Digital X-Ray Image Storage - For Presentation SOP Class.

Notes: 1. The intent of this requirement is to ensure a useful level of interoperability by avoiding the situation where an SCU might support only the Digital X-Ray Image Storage - For Processing SOP Class and an SCP only the Digital X-Ray Image Storage - For Presentation SOP Class, or vice versa. The burden is therefore to support the Digital X-Ray Image Storage - For Presentation SOP Class as a “baseline”.

2. The term “support” is used in this section in the sense that an SCU or SCP must be capable of sending or receiving the For Presentation SOP Class. There is no intent to imply that an SCU must always send an instance of the For Presentation SOP Class when an instance of the For Processing SOP Class is sent.

Nor is there any intent to imply that that during Association establishment, that a Presentation Context for the For Presentation SOP Class has to be proposed by the initiator. However, an association acceptor may reject a For Presentation SOP Class Presentation Context if it accepts a For Processing SOP Class Presentation Context, and prefers that SOP Class, in which case it may no longer be able to “pass on” the object later as an SCU unless it is able to generate a For Presentation object.

It is not possible for an SCP to determine from proposed Presentation Contexts whether or not an SCU “supports” (is capable of sending) both For Processing and For Presentation SOP Class Instances. Such a determination requires a priori knowledge of the information contained in the Conformance Statement for the SCU, as well as how the SCU is configured and operated. An SCU that supports both SOP Classes may well choose to only propose one or the other during Association establishment, depending on which Instances it actually intends to send over that particular association (although the SCU must be capable of sending instances of the For Presentation SOP Class if the SCP does not accept the For Processing).

The intent of the requirement is that if an SCU is only capable of sending the For Presentation SOP Class, any SCP will be guaranteed to be able to receive it. Conversely, if an SCP is only capable of receiving the For Presentation SOP Class, any SCU will be guaranteed to be able to send it.

B.5.1.2 Digital Mammography Image Storage SOP Classes

The Digital Mammography Image Storage - For Presentation SOP Class shall use the Digital Mammography IOD with an Enumerated Value of FOR PRESENTATION for Presentation Intent Type (0008,0068).

The Digital Mammography Image Storage - For Processing SOP Class shall use the Digital Mammography IOD with an Enumerated Value of FOR PROCESSING for Presentation Intent Type (0008,0068).

Provided by IHS
No reproduction or networking permitted without license from IHS
Not for Resale

An SCU or SCP of the Digital Mammography Image Storage - For Processing SOP Class shall also support the Digital Mammography Image Storage - For Presentation SOP Class.

B.5.1.3 Digital Intra-oral X-Ray Image Storage SOP Classes

The Digital Intra-oral X-Ray Image Storage - For Presentation SOP Class shall use the Digital Intra-oral X-Ray IOD with an Enumerated Value of FOR PRESENTATION for Presentation Intent Type (0008,0068).

The Digital Intra-oral X-Ray Image Storage - For Processing SOP Class shall use the Digital Intra-oral X-Ray IOD with an Enumerated Value of FOR PROCESSING for Presentation Intent Type (0008,0068).

An SCU or SCP of the Digital Intra-oral X-Ray Image Storage - For Processing SOP Class shall also support the Digital Intra-oral X-Ray Image Storage - For Presentation SOP Class.

B.5.1.4 Softcopy Presentation State Storage SOP Classes

See Annex N.

B.5.1.5 Structured Reporting Storage SOP Classes

The requirements of Annex O apply to the following SOP Classes:

- Basic Text SR
- Enhanced SR, and SOP Classes for which it is the Related General SOP Class
- Comprehensive SR, and SOP Classes for which it is the Related General SOP Class
- Mammography CAD SR
- Chest CAD SR
- Procedure Log
- X-Ray Radiation Dose SR

Annex O requirements do not apply to the Key Object Selection Document SOP Class.

B.5.1.6 Enhanced MR Image Storage SOP Class

An SCP of the Enhanced MR Image Storage SOP Class shall also support the Grayscale Softcopy Presentation State Storage SOP Class.

Note: This requirement is present in order to allow the exchange of graphical annotations created by an acquisition device.

B.5.1.7 Enhanced CT Image Storage SOP Class

An SCP of the Enhanced CT Image Storage SOP Class shall also support the Grayscale Softcopy Presentation State Storage SOP Class.

Note: This requirement is present in order to allow the exchange of graphical annotations created by an acquisition device.

Provided by IHS
No reproduction or networking permitted without license from IHS Not for Resale

B.6 RETIRED STANDARD SOP CLASSES

The SOP Classes in Table B.6-1 were defined in previous versions of the DICOM Standard. They are now retired and have been replaced by new standard SOP Classes shown in Table B.5-1.

Note: Usage of the retired SOP Classes is permitted by DICOM. However, new implementations are strongly encouraged to implement the newer SOP Classes.

Table B.6-1
RETIRED STANDARD SOP CLASSES

SOP Class Name	SOP Class UID
Nuclear Medicine Image Storage	1.2.840.10008.5.1.4.1.1.5
Ultrasound Image Storage	1.2.840.10008.5.1.4.1.1.6
Ultrasound Multi-frame Image Storage	1.2.840.10008.5.1.4.1.1.3
X-Ray Angiographic Bi-plane Image Storage	1.2.840.10008.5.1.4.1.1.12.3

--`,,```,,,,````-`-`,,`,,`,`,,`---

Provided by IHS
No reproduction or networking permitted without license from IHS Not for Resale

Annex C QUERY/RETRIEVE SERVICE CLASS (Normative)

C.1 OVERVIEW

C.1.1 Scope

The Query/Retrieve Service Class defines an application-level class-of-service which facilitates the simple management of composite object instances in a manner functionally similar to ACR-NEMA 300-1988. The types of queries which are allowed are not complex. This Service Class is not intended to provide a comprehensive generalized database query mechanism such as SQL. Instead, the Query/Retrieve Service Class is focused towards basic composite object instance information queries using a small set of common Key Attributes.

In addition, the Query/Retrieve Service Class provides the ability to retrieve/transfer a well-identified set of composite object instances. The retrieve/transfer capability allows a DICOM AE to retrieve composite object instances from a remote DICOM AE or request the remote DICOM AE to initiate a transfer of composite object instances to another DICOM AE.

Note: Functional similarity to ACR-NEMA 300-1988 facilitates the migration to DICOM.

C.1.2 Conventions

The following conventions are used to define the types of keys used in Query/Retrieve Information Models.

Symbol	Description
U	Unique Key Attribute
R	Required Key Attribute
O	Optional Key Attribute

C.1.3 Query/retrieve Information Model

In order to serve as an SCP of the Query/Retrieve Service Class, a DICOM AE possesses information about the Attributes of a number of stored composite object SOP Instances. This information is organized into a well defined Query/Retrieve Information Model. The Query/Retrieve Information Model shall be a standard Query/Retrieve Information Model, as defined in this Annex of the DICOM Standard.

Queries and Retrievals are implemented against well defined Information Models. A specific SOP Class of the Query/Retrieve Service Class consists of an Information Model Definition and a DIMSE-C Service Group. In this Service Class, the Information Model plays a role similar to an Information Object Definition (IOD) of most other DICOM Service Classes.

C.1.4 Service Definition

Two peer DICOM AEs implement a SOP Class of the Query/Retrieve Service Class with one serving in the SCU role and one serving in the SCP role. SOP Classes of the Query/Retrieve Service Class are implemented using the DIMSE-C C-FIND, C-MOVE, and C-GET services as defined in PS 3.7.

Both a baseline and extended behavior is defined for the DIMSE-C C-FIND, C-MOVE, and C-GET services. Baseline behavior specifies a minimum level of conformance for all implementations to facilitate interoperability. Extended behavior enhances the baseline behavior

--`,,```,,,,````-`-`,,`,,`,`,,`---

Provided by IHS
No reproduction or networking permitted without license from IHS Not for Resale

to provide additional features which may be negotiated independently at Association establishment time.

The following descriptions of the DIMSE-C C-FIND, C-MOVE, and C-GET services provide a brief overview of the SCU/SCP semantics:

a) A C-FIND service conveys the following semantics:

— The SCU requests that the SCP perform a match of all the keys specified in the Identifier of the request, against the information it possesses, to the level (E.g. Patient, Study, Series, or Composite object instance) specified in the request.

Note: In this Annex, the term “Identifier” refers to the Identifier service parameter of the C-FIND, C-MOVE, or C-GET service as defined in PS 3.7.

— The SCP generates a C-FIND response for each match with an Identifier containing the values of all key fields and all known Attributes requested. All such responses will contain a status of Pending. A status of Pending indicates that the process of matching is not complete.
— When the process of matching is complete a C-FIND response is sent with a status of Success and no Identifier.
— A Refused or Failed response to a C-FIND request indicates that the SCP is unable to process the request.
— The SCU may cancel the C-FIND service by issuing a C-FIND-CANCEL request at any time during the processing of the C-FIND service. The SCP will interrupt all matching and return a status of Canceled.

b) A C-MOVE service conveys the following semantics:

— The SCU supplies Unique Key values to identify an entity at the level of the retrieval. The SCP of the C-MOVE initiates C-STORE sub-operations for the corresponding storage SOP Instances identified by Unique Key values. These C-STORE sub-operations occur on a different Association than the C-MOVE service. The SCP role of the Query/Retrieve SOP Class and the SCU role of the Storage SOP Class may be performed by different applications which may or may not reside on the same system. Initiation mechanism of C-STORE sub-operations is outside of the scope of DICOM standard.

Note: This does not imply that they use the same AE Title. See C.6.1.2.2.2, C.6.2.2.2.2 and C.6.3.2.2.2 for the requirements to the C-MOVE SCP conformance.

— The SCP may optionally generate responses to the C-MOVE with status equal to Pending during the processing of the C-STORE sub-operations. These C-MOVE responses indicate the number of Remaining C-STORE sub-operations and the number of C-STORE sub-operations returning the status of Success, Warning, and Failed.
— When the number of Remaining C-STORE sub-operations reaches zero, the SCP generates a final response with a status equal to Success, Warning, Failed, or Refused. This response may indicate the number of C-STORE sub-operations returning the status of Success, Warning, and Failed. If the status of a C-STORE sub-operation was Failed a UID List will be returned.
— The SCU may cancel the C-MOVE service by issuing a C-MOVE-CANCEL request at any time during the processing of the C-MOVE. The SCP terminates all incomplete C-STORE sub-operations and returns a status of Canceled.

c) A C-GET service conveys the following semantics:

--`,,```,,,,````-`-`,,`,,`,`,,`---

Provided by IHS
No reproduction or networking permitted without license from IHS Not for Resale

- The SCU supplies Unique Key values to identify an entity at the level of the retrieval. The SCP generates C-STORE sub-operations for the corresponding storage SOP Instances identified by the Unique Key values. These C-STORE sub-operations occur on the same Association as the C-GET service and the SCU/SCP roles will be reversed for the C-STORE.
- The SCP may optionally generate responses to the C-GET with status equal to Pending during the processing of the C-STORE sub-operations. These C-GET responses indicate the number of Remaining C-STORE sub-operations and the number of C-STORE sub-operations returning the status of Success, Warning, and Failed.
- When the number of Remaining C-STORE sub-operations reaches zero, the SCP generates a final response with a status equal to Success, Warning, Failed, or Refused. This response may indicate the number of C-STORE sub-operations returning the status of Success, Warning, and Failed. If the status of a C-STORE sub-operation was Failed a UID List will be returned.
- The SCU may cancel the C-GET service by issuing a C-GET-CANCEL request at any time during the processing of the C-GET. The SCP terminates all incomplete C-STORE sub-operations and returns a status of Canceled.

C.2 QUERY/RETRIEVE INFORMATION MODEL DEFINITION

The Query/Retrieve Information Model is identified by the SOP Class negotiated at Association establishment time. The SOP Class is composed of both an Information Model and a DIMSE-C Service Group.

Note: This SOP Class identifies the class of the Query/Retrieve Information Model (i.e. not the SOP Class of the stored SOP Instances for which the SCP has information)

Information Model Definitions for standard SOP Classes of the Query/Retrieve Service Class are defined in this Annex. A Query/Retrieve Information Model Definition contains:

- Entity-Relationship Model Definition
- Key Attributes Definition

C.2.1 Entity-Relationship Model Definition

For any Query/Retrieve Information Model, an Entity-Relationship Model defines a hierarchy of entities, with Attributes defined for each level in the hierarchy (e.g. Patient, Study, Series, Composite object instance)

C.2.2 Attributes Definition

Attributes shall be defined at each level in the Entity-Relationship Model. An Identifier in a C-FIND, C-MOVE, or C-GET command shall contain values to be matched against the Attributes of the Entities in a Query/Retrieve Information Model. For any query, the set of entities for which Attributes are returned, shall be determined by the set of Key Attributes specified in the Identifier which have corresponding matches on entities managed by the SCP associated with the query.

C.2.2.1 Attribute Types

All Attributes of entities in a Query/Retrieve Information Model shall be either a Unique Key, Required Key, or Optional Key. The term Key Attributes refers to Unique, Required, and Optional Key Attributes.

C.2.2.1.1 Unique Keys

At each level in the Entity-Relationship Model, one Attribute shall be defined as a Unique Key. A single value in a Unique Key Attribute shall uniquely identify a single entity at a given level. That is, two entities at the same level may not have the same Unique Key value.

Provided by IHS
No reproduction or networking permitted without license from IHS Not for Resale

C-FIND, C-MOVE, and C-GET SCPs shall support existence and matching of all Unique Keys defined by a Query/Retrieve Information Model. All entities managed by C-FIND, C-MOVE, and C-GET SCPs shall have a specific non-zero length Unique Key value.

Unique Keys may be contained in the Identifier of a C-FIND request. Unique Keys shall be contained in the Identifier of C-MOVE and C-GET requests.

C.2.2.1.2 Required Keys

At each level in the Entity-Relationship Model, a set of Attributes shall be defined as Required Keys. Required Keys imply the SCP of a C-FIND shall support matching based on a value contained in a Required Key of the C-FIND request. Multiple entities may have the same value for Required Keys. That is, a distinct value in a Required Key shall not necessarily identify a single entity at the level of the key.

C-FIND SCPs shall support existence and matching of all Required Keys defined by a Query/Retrieve Information Model. If a C-FIND SCP manages an entity with a Required Key of zero length, the value is considered unknown and all matching against the zero length Required Key shall be considered a successful match.

Required Keys may be contained in the Identifier of a C-FIND request. Required Keys shall not be contained in the Identifier of C-MOVE and C-GET requests.

C.2.2.1.3 Optional Keys

At each level in the Entity-Relationship Model, a set of Attributes shall be defined as Optional Keys.

Optional Keys contained in the Identifier of a C-FIND request may have three different types of behavior depending on support for existence and/or matching by the C-FIND SCP. If the C-FIND SCP:

- does not support the existence of the Optional Key, then the Attribute shall not be returned in C-FIND responses
- supports the existence of the Optional Key but does not support matching on the Optional Key, then the Optional Key shall be processed in the same manner as a zero length Required Key. That is, the value specified to be matched for the Optional Key is ignored but a value may be returned by the SCP for this Optional Key.
- supports the existence and matching of the Optional Key, then the Optional Key shall be processed in the same manner as a Required Key.

Notes: 1. C-FIND SCU may not assume an Optional Key with non-zero length will be processed in the same manner as a Required Key. The Conformance Statement of the C-FIND SCP shall list the Optional Keys which are supported.

2. Optional Keys are differentiated from Required Keys in that Optional Keys may or may not be supported for existence and/or matching by C-FIND SCPs. Whereas, Required Keys must always be supported by C-FIND SCPs.

Optional Keys may be contained in the Identifier of a C-FIND request. Optional Keys shall not be contained in the Identifier of C-MOVE and C-GET requests.

C.2.2.2 Attribute Matching

The following types of matching may be performed on Key Attributes in the Query/Retrieve Service Class:

- Single Value Matching
- List of UID Matching

Provided by IHS
No reproduction or networking permitted without license from IHS
Not for Resale

- Universal Matching
- Wild Card Matching
- Range Matching
- Sequence Matching

Matching requires special characters (i.e. “*”,”?”,”-”, and “\”) which need not be part of the character repertoire for the VR of the Key Attributes.

Notes: 1.For example, the “-“ character is not valid for the DA, DT and TM Vrs but is used for range matching.

2. When character sets other than the default character repertoire are used, then the rules in PS 3.5 apply, such as with respect to the use of the 05/12 “\” (BACKSLASH) (in ISO IR 6) or 05/12 “¥” (YEN SIGN) (in ISO IR 14).

The total length of the Key Attribute may exceed the length as specified in the VR in PS 3.5. The Value Multiplicity (VM) may be larger than the VM specified in PS 3.6 for the Key Attribute, as defined for particular Matching Type.

The Specific Character Set (0008,0005) Attribute may be present in the Identifier but is never matched. Rather, it specifies how other Attributes are encoded in the Request and Response Identifiers.

It may influence how matching of other Attributes is performed. If Specific Character Set (0008,0005) is absent, then the default character repertoire shall be used. Specific Character Set (0008,0005) shall not have a zero length value.

Specific Character Set (0008,0005) may have multiple values if escape sequences are used to switch between character repertoires within values.

If the SCP does not support the value(s) of Specific Character Set (0008,0005) in the Request Identifier, then the manner in which matching is performed is undefined and shall be specified in the conformance statement.

Note: If an SCU sends a Request Identifier with a single byte character set not supported by the SCP, then it is likely, but not required, that the SCP will treat unrecognized characters as wildcards and match only on characters in the default repertoire, and return a response in the default repertoire.

C.2.2.2.1 Single Value Matching

If the value specified for a Key Attribute in a request is non-zero length and if it is:

a) not a date or time or datetime, contains no wild card characters
b) a date or time or datetime, contains a single date or time or datetime with no “-“

then single value matching shall be performed. Except for Attributes with a PN Value Representation, only entities with values which match exactly the value specified in the request shall match. This matching is case-sensitive, i.e., sensitive to the exact encoding of the key attribute value in character sets where a letter may have multiple encodings (e.g., based on its case, its position in a word, or whether it is accented).

For Attributes with a PN Value Representation (e.g., Patient Name (0010,0010)), an application may perform matching that is either case-sensitive, or that is insensitive to some or all aspects of case, position, accent, or other character encoding variants. The manner in which such matching is performed is implementation dependent and shall be specified in the conformance statement.

Provided by IHS
No reproduction or networking permitted without license from IHS Not for Resale

Notes: 1. This definition implies that dates or times or datetimes are matched by their meaning, not as literal strings. For example:

- the DT “19980128103000.0000” matches “19980128103000”
- the DT “19980128103000” matches “19980128073000-0300”
- the TM “2230” matches “223000”
- the TM “223000” matches the deprecated ACR/NEMA 2.0 form “22:30:00”
- the DA “19980128” matches the deprecated ACR/NEMA 2.0 form “1998.01.28”

2. If an application is concerned about how single value matching of dates and times is performed by another application, it may consider using range matching instead, which is always performed by meaning, with both values in the range the same.

3. Exclusion of the “-“ character for single value matching implies that a Key Attribute with DT Value Representation may not contain a negative offset from Universal Coordinated Time (UTC) if single value matching is intended. Use of the “-“ character in date, time or datetime indicates range matching.

4. If an application is in a local time zone that has a negative offset then it cannot perform single value matching using a local time notation. Instead, it can convert the Key Attribute value to UTC and use an explicit suffix of “+0000”.

5. Matching of PN Attributes may be accent-insensitive, as specified in the conformance statement. Accent-insensitive matching would successfully match, for instance, a query character “SMALL LETTER a” (06/01 in the default ISO-IR 6) with

“SMALL LETTER a WITH GRAVE ACCENT” (14/00 in ISO-IR 100),

“SMALL LETTER a WITH TILDE” (14/03 in ISO-IR 100),

“SMALL LETTER a WITH BREVE” (14/03 in ISO-IR 101), and

“CAPITAL LETTER a WITH ACUTE ACCENT” (12/01 in ISO-IR 100) (if matching is also case-insensitive),

but would not match 14/00 in ISO-IR 101, which is “SMALL LETTER r WITH ACUTE ACCENT”. Matching to particular bit-combinations is specific to each supported character set (note the difference in meaning of 14/00), and should be described in the conformance statement.

C.2.2.2.2 List of UID Matching

A List of UIDs is encoded by using the value multiplicity operator, backslash (“\”), as a delimiter between UIDs. Each item in the list shall contain a single UID value. Each UID in the list contained in the Identifier of the request may generate a match.

Note: A list of single values is encoded exactly as a VR of UI and a VM of Multiple (see PS 3.5).

C.2.2.2.3 Universal Matching

If the value specified for a Key Attribute in a request is zero length, then all entities shall match this Attribute. An Attribute which contains a Universal Match specification in a C-FIND request provides a mechanism to request the selected Attribute value be returned in corresponding C-FIND responses.

C.2.2.2.4 Wild Card Matching

If the Attribute is not a date, time, signed long, signed short, unsigned short, unsigned long, floating point single, floating point double, other byte string, other word string, unknown, attribute tag, decimal string, integer string, age string or UID and the value specified in the request contains any occurrence of an “*” or a “?”, then “*” shall match any sequence of characters (including a zero length value) and “?” shall match any single character. This matching is case sensitive, except for Attributes with an PN Value Representation (e.g., Patient Name (0010,0010)) in which case it is implementation dependent and shall be specified in the conformance statement. See PS 3.5 for Value Representations.

Provided by IHS
No reproduction or networking permitted without license from IHS
Not for Resale

Notes: 1. Wild card matching on a value of "*" is equivalent to universal matching.

2. The wild card matching method specified by DICOM might not be supported by some non-DICOM multi-byte character text processors.

C.2.2.2.5 Range Matching

If the Attribute is a date, then:

a) A string of the form "<date1> - <date2>" shall match all occurrences of dates which fall between <date1> and <date2> inclusive
b) A string of the form "- <date1>" shall match all occurrences of dates prior to and including <date1>
c) A string of the form "<date1> -" shall match all occurrences of <date1> and subsequent dates

If the Attribute is a time, then:

a) A string of the form "<time1> - <time2>" shall match all occurrences of times which fall between <time1> and <time2> inclusive
b) A string of the form "- <time1>" shall match all occurrences of times prior to and including <time1>
c) A string of the form "<time1> -" shall match all occurrences of <time1> and subsequent times

If the Attribute is a datetime, then:

a) A string of the form "<datetime1> - <datetime2>" shall match all moments in time which fall between <datetime1> and <datetime2> inclusive
b) A string of the form "- <datetime1>" shall match all moments in time prior to and including <datetime1>
c) A string of the form "<datetime1> -" shall match all moments in time subsequent to and including <datetime1>
d) The offset from Universal Coordinated Time, if present in the Value of the Attribute, shall be taken into account for the purposes of the match.

Range matching is not defined for types of Attributes other than dates and times.

C.2.2.2.6 Sequence Matching

If a Key Attribute in the Identifier of a C-FIND request needs to be matched against an Attribute structured as a Sequence of Items (Value Representation of Type SQ), the Key Attribute shall be structured as a Sequence of Items with a single Item. This Item may contain zero or more Item Key Attributes. Each Item Key Attribute matching shall be performed on an Item by Item basis. The types of matching defined in Section C.2.2.2 shall be used: Single Value Matching, List of UID Matching, Universal Matching, Wild Card Matching, Range Matching and Sequence Matching (recursive Sequence matching)

If all the Item Key Attributes match, for at least one of the Items of the Attribute against which the match is performed, a successful match is generated. A sequence of matching Items containing only the requested attributes is returned in the corresponding C-FIND responses.

If the Key Attribute in the Identifier of a C-FIND request contains no Key Item Attribute (zero-length Item Tag), then all entities shall match this Attribute. This provides a universal matching like mechanism to request that the selected Key Attribute value (the entire Sequence of Items) be returned in corresponding C-FIND responses.

Provided by IHS
No reproduction or networking permitted without license from IHS Not for Resale

C.2.2.3 Matching Multiple Values

When matching an Attribute which has a value multiplicity of greater than one, if any of the values match, then all values shall be returned.

C.3 STANDARD QUERY/RETRIEVE INFORMATION MODELS

Three standard Query/Retrieve Information Models are defined in this Annex. Each Query/Retrieve Information Model is associated with a number of SOP Classes. The following three hierarchical Query/Retrieve Information Models are defined:

- Patient Root
- Study Root
- Patient/Study Only

C.3.1 Patient Root Query/Retrieve Information Model

The Patient Root Query/Retrieve Information Model is based upon a four level hierarchy:

- Patient
- Study
- Series
- Composite object instance

The patient level is the top level and contains Attributes associated with the Patient Information Entity (IE) of the Composite IODs as defined in PS 3.3. Patients IEs are modality independent.

The study level is below the patient level and contains Attributes associated with the Study IE of the Composite IODs as defined in PS 3.3. A study belongs to a single patient. A single patient may have multiple studies. Study IEs are modality independent.

The series level is below the study level and contains Attributes associated with the Series, Frame of Reference and Equipment IEs of the Composite IODs as defined in PS 3.3. A series belongs to a single study. A single study may have multiple series. Series Ies are modality dependent. To accommodate this modality dependence, the set of Optional Keys at the series level includes all Attributes defined at the series level from any Composite IOD defined in PS 3.3.

The lowest level is the composite object instance level and contains Attributes associated with the Composite object IE of the Composite IODs as defined in PS 3.3. A composite object instance belongs to a single series. A single series may contain multiple composite object instances. Most composite object IEs are modality dependent. To accommodate this potential modality dependence, the set of Optional Keys at the composite object instance level includes all Attributes defined at the composite object instance level from any Composite IOD defined in PS 3.3.

C.3.2 Study Root Query/Retrieve Information Model

The Study Root Query/Retrieve Information Model is identical to the Patient Root Query/Retrieve Information Model except the top level is the study level. Attributes of patients are considered to be Attributes of studies.

C.3.3 Patient/Study Only Query/Retrieve Information Model

Retired. See PS 3.4 2004.

C.3.4 Additional Query/Retrieve Attributes

Some optional attributes that may be used in Query/Retrieve Information Models that are not Attributes of an Information Object Definition and, therefore, are not defined in PS 3.3. These attributes are defined in Table C.3-1.

Provided by IHS
No reproduction or networking permitted without license from IHS
Not for Resale

Table C.3-1
ADDITIONAL QUERY/RETRIEVE ATTRIBUTES

Attribute Name	Tag	Attribute Description
Number of Patient Related Studies	(0020,1200)	The number of studies that match the Patient level Query/Retrieve search criteria
Number of Patient Related Series	(0020,1202)	The number of series that match the Patient level Query/Retrieve search criteria
Number of Patient Related Instances	(0020,1204)	The number of composite object instances that match the Patient level Query/Retrieve search criteria
Number of Study Related Series	(0020,1206)	The number of series that match the Study level Query/Retrieve search criteria
Number of Series Related Instances	(0020,1209)	The number of composite object instances in a Series that match the Series level Query/Retrieve search criteria
Number of Study Related Instances	(0020,1208)	The number of composite object instances that match the Study level Query/Retrieve search criteria
SOP Classes in Study	(0008,0062)	The SOP Classes contained in the Study.
Alternate Representation Sequence	(0008,3001)	A Sequence of Items, each identifying an alternate encoding of an image that matches the Instance level Query/Retrieve search criteria (see C.6.1.1.5.1)

If the SCP manages images in multiple alternate encodings, only one of the alternate encodings of an image is included in the number of object instances.

C.4 DIMSE-C SERVICE GROUPS

Three DIMSE-C Services are used in the construction of SOP Classes of the Query/Retrieve Service Class. The following DIMSE-C operations are used:

— C-FIND
— C-MOVE
— C-GET

C.4.1 C-FIND Operation

SCPs of some SOP Classes of the Query/Retrieve Service Class may be capable of processing queries using the C-FIND operation as described in PS 3.7. The C-FIND operation is the mechanism by which queries are performed. Matches against the keys present in the Identifier are returned in C-FIND responses.

C.4.1.1 C-FIND Service Parameters

C.4.1.1.1 SOP Class UID

The SOP Class UID identifies the Query/Retrieve Information Model against which the C-FIND is to be performed. Support for the SOP Class UID is implied by the Abstract Syntax UID of the Presentation Context used by this C-FIND operation.

C.4.1.1.2 Priority

The Priority Attribute defines the requested priority of the C-FIND operation with respect to other DIMSE operations being performed by the same SCP.

Provided by IHS
No reproduction or networking permitted without license from IHS
Not for Resale

Processing of priority requests is not required of SCPs. Whether or not an SCP supports priority processing and the meaning of the different priority levels shall be stated in the Conformance Statement of the SCP.

C.4.1.1.3 Identifier

Both the C-FIND request and response contain an Identifier encoded as a Data Set (see PS 3.5).

C.4.1.1.3.1 Request Identifier Structure

An Identifier in a C-FIND request shall contain:

- Key Attributes values to be matched against the values of storage SOP Instances managed by the SCP.
- Query/Retrieve Level, element (0008,0052) which defines the level of the query.
- Conditionally, the Attribute Specific Character Set (0008,0005). This Attribute shall be included if expanded or replacement character sets may be used in any of the Attributes in the Request Identifier. It shall not be included otherwise.

The Key Attributes and values allowable for the level of the query shall be defined in the SOP Class definition for the Query/Retrieve Information Model.

C.4.1.1.3.2 Response Identifier Structure

The C-FIND response shall not contain Attributes that were not in the request or specified in this section.

An Identifier in a C-FIND response shall contain:

- Key Attributes with values corresponding to Key Attributes contained in the Identifier of the request.
- Query/Retrieve Level, element (0008,0052) which defines the level of the query. The Query/Retrieve level shall be equal to the level specified in the request.
- Conditionally, the Attribute Specific Character Set (0008,0005). This Attribute shall be included if expanded or replacement character sets may be used in any of the Attributes in the Response Identifier. It shall not be included otherwise. The C-FIND SCP is not required to return responses in the Specific Character Set requested by the SCU if that character set is not supported by the SCP. The SCP may return responses with a different Specific Character Set.

The C-FIND SCP is required to support either or both the Retrieve AE Title Data Element or the Storage Media File-Set ID/Storage Media File Set UID Data Elements. An Identifier in a C-FIND response shall contain:

- Storage Media File-Set ID (0088,0130) which defines a user or implementation specific human readable Identifier that identifies the Storage Media on which the composite object instance(s) reside. This element pertains to the set of composite object instances available at the Query/Retrieve Level specified in the Identifier of the C-FIND request (e.g. Patient, Study, Series, Composite object instance). This Attribute shall be present if the Retrieve AE Title Data Element is not present. A null value (Data Element length of 0) is valid for all levels except the lowest level in the Information Model as defined by the SOP Class.

Provided by IHS
No reproduction or networking permitted without license from IHS
Not for Resale

— Storage Media File-Set UID (0088,0140) which uniquely identifies the Storage Media on which the composite object instance(s) reside. This element pertains to the set of composite object instances available at the Query/Retrieve Level specified in the Identifier of the C-FIND request (e.g. Patient, Study, Series, Composite object instance). This Attribute shall be present if the Retrieve AE Title Data Element is not present. A null value (Data Element length of 0) is valid for all levels except the lowest level in the Information Model as defined by the SOP Class.

Note: The File-Set concepts are used in PS 3.10.

— Retrieve AE Title (0008,0054) which defines a list of DICOM Application Entity Title(s) that identify the location from which the composite object instance(s) may be retrieved on the network. This element pertains to the set of composite object instances available at the Query/Retrieve Level specified in the Identifier of the C-FIND request (e.g. Patient, Study, Series, Composite object instance). This Attribute shall be present if the Storage Media File-Set ID and Storage Media File-Set UID elements are not present. The Application Entity named in this field shall support either the C-GET or C-MOVE SOP Class of the Query/Retrieve Service Class. A null value (Data Element length of 0) is valid for all levels except the lowest level in the Information Model as defined by the SOP Class.

Notes: 1. For example, a DICOM AE with the AE Title of “A” performs a C-FIND request to a DICOM AE with the AE Title of “B” with the Query/Retrieve level set to “STUDY”. DICOM AE “B” determines that the composite object instances for each matching study may be retrieved by itself and sets the Data Element Retrieve AE Title to “B”.

2. File-Sets may not be defined at every Query/Retrieve Level. If the SCP supports the File-Set ID/File-Set UID option but does not define these Attributes at the Query/Retrieve Level specified in the C-FIND request it may return these Data Elements with a length of 0 to signify that the value is unknown. An SCU should reissue a C-FIND at a Query/Retrieve Level lower in the hierarchy.

3. The fact that the value of the Key Attribute is unknown to the SCP of the Query/Retrieve Service Class does not imply that it is not present in the underlying Information Object. Thus, a subsequent retrieval may cause a Storage of a SOP Instance which contains the value of the Attribute.

The C-FIND SCP may also, but is not required to, support the Instance Availability (0008,0056) Data Element. This Data Element shall not be included in a C-FIND request. An Identifier in a C-FIND response may contain:

— Instance Availability (0008,0056) which defines how rapidly composite object instance(s); become available for transmission after a C-MOVE or C-GET retrieval request. This element pertains to the set of composite object instances available at the Query/Retrieve Level specified in the Identifier of the C-FIND request (e.g. Patient, Study, Series, Composite object instance). When some composite instances are less rapidly available than others, the availability of the least rapidly available shall be returned. If this Data Element is not returned, the availability is unknown or unspecified. A null value (Data Element length of 0) is not permitted. The Enumerated Values for this Data Element are:
  — “ONLINE” which means the instances are immediately available,
  — “NEARLINE” which means the instances need to be retrieved from relatively slow media such as optical disk or tape,
  — “OFFLINE” which means the instances need to be retrieved by manual intervention,

--`,,```,,,,````-`-`,,`,,`,`,,`---

Provided by IHS
No reproduction or networking permitted without license from IHS Not for Resale

— "UNAVAILABLE", which means the instances cannot be retrieved. Note that SOP Instances that are unavailable may have an alternate representation that is available (see section C.6.1.1.5.1).

C.4.1.1.4 Status

Table C.4-1 defines the specific status code values which might be returned in a C-FIND response. General status code values and fields related to status code values are defined in PS 3.7.

Table C.4-1
C-FIND RESPONSE STATUS VALUES

Service Status	Further Meaning	Status Codes	Related Fields
Failure	Refused: Out of Resources	A700	(0000,0902)
	Identifier does not match SOP Class	A900	(0000,0901) (0000,0902)
	Unable to process	Cxxx	(0000,0901) (0000,0902)
Cancel	Matching terminated due to Cancel request	FE00	None
Success	Matching is complete – No final Identifier is supplied.	0000	None
Pending	Matches are continuing – Current Match is supplied and any Optional Keys were supported in the same manner as Required Keys.	FF00	Identifier
	Matches are continuing – Warning that one or more Optional Keys were not supported for existence and/or matching for this Identifier.	FF01	Identifier

C.4.1.2 C-FIND SCU Behavior

This Section discusses both the baseline and extended behavior of the C-FIND SCU.

C.4.1.2.1 Baseline Behavior of SCU

All C-FIND SCUs shall be capable of generating query requests which meet the requirements of the Hierarchical Search.

The Identifier contained in a C-FIND request shall contain a single value in the Unique Key Attribute for each level above the Query/Retrieve level. No Required or Optional Keys shall be specified which are associated with levels above the Query/Retrieve level.

The Unique Key Attribute associated with the Query/Retrieve level shall be contained in the C-FIND request and may specify Single Value Matching, Universal Value Matching, or List of UID Matching. In addition, Required and Optional Keys associated with the Query/Retrieve level may be contained in the Identifier.

An SCU conveys the following semantics using the C-FIND request:

— The SCU requests that the SCP perform a match of all keys specified in the Identifier of the request against the information it possesses down to the Query/Retrieve level

--`,,```,,,,````-`-`,,`,,`,`,,`---

Provided by IHS
No reproduction or networking permitted without license from IHS Not for Resale

specified in the request.

Notes: 1. The SCU may not assume the SCP supports any Optional Keys. Hence, Optional Keys serve only to reduce network related overhead when they are supported by the SCP.

2. The SCU must be prepared to filter C-FIND responses when the SCP fails to support an Optional Key specified in the C-FIND request.

- The SCU shall interpret Pending responses to convey the Attributes of a match of an Entity at the level of the query.
- The SCU shall interpret a response with a status equal to Success, Failed or Refused to convey the end of Pending responses.
- The SCU shall interpret a Refused or Failed response to a C-FIND request as an indication that the SCP is unable to process the request.
- The SCU may cancel the C-FIND service by issuing a C-FIND-CANCEL request at any time during the processing of the C-FIND. The SCU shall recognize a status of Canceled to indicate that the C-FIND-CANCEL was successful.

C.4.1.2.2 Extended Behavior of SCU

Extended SCU behavior shall be negotiated at Association establishment time. If an option within the extended behavior is not agreed upon in the negotiation, then only baseline SCU behavior shall be performed with respect to that option. Extended SCU behavior includes all baseline behavior with the following option:

- Relational-queries

C.4.1.2.2.1 Relational-Queries

The C-FIND Service with relational-queries allows any combination of keys at any level in the hierarchy. The Unique Key Attribute associated with the Query/Retrieve level shall be contained in the C-FIND request and may specify Single Value Matching, Universal Value Matching, or List of UID Matching. Support for relational-queries removes the baseline restriction that a Unique Key shall be specified for all levels above the Query/Retrieve level in the C-FIND request.

C.4.1.3 C-FIND SCP Behavior

This Section discusses both the baseline and extended behavior of the C-FIND SCP.

C.4.1.3.1 Baseline behavior of SCP

All C-FIND SCPs shall be capable of processing queries which meet the requirements of the Hierarchical Search.

An SCP conveys the following semantics with a C-FIND response:

- The SCP is requested to perform a match of all the keys specified in the Identifier of the request, against the information it possesses, to the level specified in the request. Attribute matching is performed using the key values specified in the Identifier of the C-FIND request as defined in Section C.2.
- The SCP generates a C-FIND response for each match using the Hierarchical Search method. All such responses shall contain an Identifier whose Attributes contain values from a single match. All such responses shall contain a status of Pending.
- When all matches have been sent, the SCP generates a C-FIND response which contains a status of Success. A status of Success shall indicate that a response has been sent for each match known to the SCP.

  Note: When there are no matches, then no responses with a status of Pending are sent, only a single response with a status of Success.

Provided by IHS
No reproduction or networking permitted without license from IHS Not for Resale

— The SCP shall generate a response with a status of Refused or Failed if it is unable to process the request. A Refused or Failed response shall contain no Identifier.
— If the SCP receives C-FIND-CANCEL indication before it has completed the processing of the matches it shall interrupt the matching process and return a status of Canceled.
— If the SCP manages images in multiple alternate encodings (see C.6.1.1.5.1), only one of the alternate encodings of an image shall be included in the set of matches for a C-FIND request at the Instance level.

Note: For query of images with alternate encodings, the SCP may select the appropriately encoded Instance for the request response based on identity of the SCU or other factors.

C.4.1.3.1.1 Hierarchical Search Method

Starting at the top level in the Query/Retrieve Information Model, continuing until the level specified in the C-FIND request is reached, the following procedures are used to generate matches:

a) If the current level is the level specified in the C-FIND request, then the key match strings contained in the Identifier of the C-FIND request are matched against the values of the Key Attributes for each entity at the current level. For each entity for which the Attributes match all of the specified match strings, construct an Identifier. This Identifier shall contain all of the Unique Keys at higher levels and all of the values of the Attributes for this entity which match those in the C-FIND request. Return a response for each such Identifier. If there are no matching keys, then there are no matches, return a response with a status equal to Success and with no Identifier.
b) Otherwise, if the current level is not the level specified in the C-FIND request and there is an entity matching the Unique Key Attribute value for this level specified in the C-FIND request, perform this procedure at the next level down in the hierarchy.
c) Otherwise there are no matches; return a response with a status equal to Success.

Note: The above description specifies a recursive procedure. It may recur upon itself multiple times as it goes down the hierarchical levels, but at each level it recurs only once.

C.4.1.3.2 Extended Behavior of SCP

Extended SCP behavior shall be negotiated at Association establishment time. If an option within the extended behavior is not agreed upon in the negotiation, then only baseline SCP behavior shall be performed with respect to that option. Extended SCP behavior includes all baseline behavior with the following option:

— Relational-queries

C.4.1.3.2.1 Relational-Queries

The C-FIND Service with relational-queries allows any combination of keys at any level in the hierarchy. At the lowest level, a query using the relational-queries shall contain the Unique Key for that level with either a single value match, a wild card match, or a universal match. Support for relational-queries removes the baseline restriction that a Unique Key shall be specified for all levels above the Query/Retrieve level in the C-FIND request.

The C-FIND SCP shall perform matching based on all keys specified in the C-FIND request regardless of the Query/Retrieve level.

C.4.1.3.2.2 Relational Search Method

A query using the relational method may contain any combination of keys at any level in the hierarchy. Starting at the top level in the Query/Retrieve Information Model, continuing until the

Provided by IHS
No reproduction or networking permitted without license from IHS Not for Resale

Query/Retrieve level specified in the C-FIND request is reached, the following procedures are used to generate matches:

a) The key match strings contained in the Identifier of the C-FIND request are matched against the values of the Key Attributes for each entity at the current level.
b) If no Key Attribute is specified at the current level and the current level is not the level specified in the C-FIND request, the match shall be performed as if a wild card were specified for the Unique Key Attribute for the current level (i.e. all entities at the current level shall match).
c) If the current level is the level specified in the C-FIND request, then for each matching entity (a matching entity is one for which the Attributes match all of the specified match strings in the Key Attributes), construct an Identifier. This Identifier shall contain all of the Attributes generated by this procedure at higher levels on this recursion path and all of the values of the Key Attributes for this entity which match those in the C-FIND request.
d) Otherwise, if the current level is not the level specified in the C-FIND request, then for each matching entity construct a list of Attributes containing all of the matching Key Attributes and all Attributes which were prepared at the previous level for this entity. Then perform this procedure at the next level down in the hierarchy for each matching entity.
e) Otherwise, if there are no matches, return a response with status equal to Success and no Identifier.

Notes: 1. The above description specifies a recursive procedure. It may recur upon itself multiple times as it goes down the hierarchical levels, and at each level, it may recur multiple times (one for each matching entity). This may result in a large number of Identifiers being generated.

2. It is not required that the above defined procedure be used to generate matches. It is expected that implementations will incorporate different algorithms for performing searches of the databases. For a given query, the set of matches shall be equivalent to that which would be generated by the above procedure.

C.4.2 C-MOVE Operation

SCUs of some SOP Classes of the Query/Retrieve Service Class may generate retrievals using the C-MOVE operation as described in PS 3.7. The C-MOVE operation allows an application entity to instruct another application entity to transfer stored SOP Instances to another application entity using the C-STORE operation. Support for the C-MOVE service shall be agreed upon at Association establishment time by both the SCU and SCP of the C-MOVE in order for a C-MOVE operation to occur over the Association. The C-STORE sub-operations shall always be accomplished over an Association different from the Association which accomplishes the C-MOVE operation. Hence, the SCP of the Query/Retrieve Service Class serves as the SCU of the Storage Service Class.

Note: The application entity which receives the stored SOP Instances may or may not be the originator of the C-MOVE operation.

A C-MOVE request may be performed to any level of the Query/Retrieve Information Model. However, the transfer of stored SOP Instances may not be performed at this level. The level at which the transfer is performed depends upon the SOP Class (See Section C.6).

C.4.2.1 C-MOVE Service Parameters

C.4.2.1.1 SOP Class UID

The SOP Class UID identifies the Query/Retrieve Information Model against which the C-MOVE is to be performed. Support for the SOP Class UID is implied by the Abstract Syntax UID of the Presentation Context used by this C-MOVE operation.

--`,,```,,,,````-`-`,,`,,`,`,,`---

Provided by IHS
No reproduction or networking permitted without license from IHS Not for Resale

C.4.2.1.2 Priority

The Priority Attribute defines the requested priority of the C-MOVE operation and corresponding C-STORE sub-operations with respect to other DIMSE operations being performed by the same SCP.

Processing of priority requests is not required of SCPs. Whether or not an SCP supports priority processing, and the meaning of the different priority levels shall be stated in the Conformance Statement of the SCP. The same priority shall be used for all C-STORE sub-operations.

C.4.2.1.3 Move Destination

Move Destination specifies the Application Entity Title of the performer of the C-STORE sub-operations.

C.4.2.1.4 Identifier

The C-MOVE request shall contain an Identifier. The C-MOVE response shall conditionally contain an Identifier as required in C.4.2.1.4.2.

Note: The Identifier is specified as U in the definition of the C-MOVE primitive in PS 3.7 but is specialized for use with this service.

C.4.2.1.4.1 Request Identifier Structure

An Identifier in a C-MOVE request shall contain:

- the Query/Retrieve Level (0008,0052) which defines the level of the retrieval
- Unique Key Attributes which may include Patient ID (0010,0020), Study Instance UIDs (0020,000D), Series Instance UIDs (0020,000E), and the SOP Instance UIDs (0008,0018)

Specific Character Set (0008,0005) shall not be present.

The Unique Keys at each level of the hierarchy and the values allowable for the level of the retrieval shall be defined in the SOP Class definition for the Query/Retrieve Information Model.

Note: In the Baseline behavior, more than one entity may be retrieved if the Query/Retrieve Level is IMAGE, SERIES or STUDY, using List of UID matching, but only Single Value Matching value may be specified for Patient ID (0010,0020).

C.4.2.1.4.2 Response Identifier Structure

The Failed SOP Instance UID List (0008,0058) specifies a list of UIDs of the C-STORE sub-operation SOP Instances for which this C-MOVE operation has failed. An Identifier in a C-MOVE response shall conditionally contain the Failed SOP Instance UID List (0008,0058) based on the C-MOVE response status value. If no C-STORE sub-operation failed, Failed SOP Instance UID List (0008,0058) is absent and therefore no Data Set shall be sent in the C-MOVE response.

Specific Character Set (0008,0005) shall not be present.

The Identifier in a C-MOVE response with a status of:

- Canceled, Failed, Refused, or Warning shall contain the Failed SOP Instance UID List Attribute
- Pending shall not contain the Failed SOP Instance UID List Attribute (no Data Set)

Provided by IHS
No reproduction or networking permitted without license from IHS
Not for Resale

C.4.2.1.5 Status

Table C.4-2 defines the specific status code values which might be returned in a C-MOVE response. General status code values and fields related to status code values are defined in PS 3.7.

Table C.4-2
C-MOVE RESPONSE STATUS VALUES

Service Status	Further Meaning	Status Codes	Related Fields
Failure	Refused: Out of Resources – Unable to calculate number of matches	A701	(0000,0902)
	Refused: Out of Resources – Unable to perform sub-operations	A702	(0000,1020) (0000,1021) (0000,1022) (0000,1023)
	Refused: Move Destination unknown	A801	(0000,0902)
	Identifier does not match SOP Class	A900	(0000,0901) (0000,0902)
	Unable to Process	Cxxx	(0000,0901) (0000,0902)
Cancel	Sub-operations terminated due to Cancel Indication	FE00	(0000,1020) (0000,1021) (0000,1022) (0000,1023)
Warning	Sub-operations Complete – One or more Failures	B000	(0000,1020) (0000,1022) (0000,1023)
Success	Sub-operations Complete – No Failures	0000	(0000,1020) (0000,1021) (0000,1022) (0000,1023)
Pending	Sub-operations are continuing	FF00	(0000,1020) (0000,1021) (0000,1022) (0000,1023)

C.4.2.1.6 Number of Remaining Sub-Operations

Inclusion of the Number of Remaining Sub-operations is conditional based upon the status in the C-MOVE response. The Number of Remaining Sub-operations specifies the number of Remaining C-STORE sub-operations necessary to complete the C-MOVE operation.

A C-MOVE response with a status of:

- Pending shall contain the Number of Remaining Sub-operations Attribute
- Canceled may contain the Number of Remaining Sub-operations Attribute
- Warning, Failed, Refused, or Successful shall not contain the Number of Remaining Sub-operations Attribute

Provided by IHS
No reproduction or networking permitted without license from IHS
Not for Resale

C.4.2.1.7 Number of Successful Sub-Operations

Inclusion of the Number of Successful Sub-operations is conditional based upon the status in the C-MOVE response. The Number of Successful sub-operations specifies the number of C-STORE sub-operations generated by the requested transfer which have completed successfully.

A C-MOVE response with a status of:

- Pending shall contain the Number of Successful Sub-operations Attribute
- Canceled, Warning, Failed, Refused, or Successful may contain the Number of Successful Sub-operations Attribute

C.4.2.1.8 Number of Failed Sub-Operations

Inclusion of the Number of Failed Sub-operations is conditional based upon the status in the C-MOVE response. The Number of Failed sub-operations specifies the number of C-STORE sub-operations generated by the requested transfer which have Failed.

A C-MOVE response with a status of:

- Pending shall contain the Number of Failed Sub-operations Attribute
- Canceled, Warning, Failed, Refused, or Successful may contain the Number of Failed Sub-operations Attribute

C.4.2.1.9 Number of Warning Sub-Operations

Inclusion of the Number of Warning Sub-operations is conditional based upon the status in the C-MOVE response. The Number of Warning sub-operations specifies the number of C-STORE sub-operations generated by the requested transfer which had a status of warning.

A C-MOVE response with a status of:

- Pending shall contain the Number of Warnings Sub-operations Attribute
- Canceled, Warning, Failed, Refused, or Successful may contain the Number of Warning Sub-operations Attribute

C.4.2.2 C-MOVE SCU Behavior

This Section discusses both the baseline and extended behavior of the C-MOVE SCU.

C.4.2.2.1 Baseline Behavior of SCU

An SCU conveys the following semantics with a C-MOVE request:

- The SCU shall supply a single value in the Unique Key Attribute for each level above the Query/Retrieve level. For the level of retrieve, the SCU shall supply one unique key if the level of retrieve is above the STUDY level and shall supply one UID, or a list of UIDs if a retrieval of several items is desired and the retrieve level is STUDY, SERIES or IMAGE. The SCU shall also supply a move destination. The move destination shall be the DICOM Application Entity Title of a DICOM Application Entity capable of serving as the SCP of the Storage Service Class.
- The SCU shall interpret responses to the C-MOVE with status equal to Pending during the processing of the C-STORE sub-operations. These responses shall indicate the number of Remaining, Successful, Failed, and Warning C-STORE sub-operations.
- The SCU shall interpret responses with a status equal to Success, Warning, Failed, or Refused as final responses. The final response shall indicate the number of Successful C-STORE sub-operations and the number of Failed C-

Provided by IHS
No reproduction or networking permitted without license from IHS Not for Resale

STORE sub-operations resulting from the C-MOVE operation. The SCU shall interpret a status of:

— Success to indicate that all sub-operations were successful

— Warning to indicate one or more sub-operations were successful and one or more sub-operations were unsuccessful or had a status of warning, or all sub-operations had a status of warning

— Failed or Refused to indicate all sub-operations were unsuccessful.

— The SCU may cancel the C-MOVE service by issuing a C-MOVE-CANCEL request at any time during the processing of the C-MOVE. The SCU shall interpret a C-MOVE response with a status of Canceled to indicate the transfer was canceled. The C-MOVE response with a status of Canceled shall contain the number of Successful, Failed, and Warning C-STORE sub-operations. If present, the Remaining sub-operations count shall contain the number of C-STORE sub-operations which were not initiated due to the C-MOVE-CANCEL request.

C.4.2.2.2 Extended Behavior of SCU

Extended SCU behavior shall be negotiated at Association establishment time. If an option within the extended behavior is not agreed upon in the negotiation, then only baseline SCU behavior shall be performed with respect to that option. Extended SCU behavior includes all baseline behavior with the following option:

— Relational-retrieve

C.4.2.2.2.1 Relational-Retrieve

The C-MOVE Service with relational-retrieve removes the restriction that the SCU supply Unique Key values for levels above the Query/Retrieve level to identify an entity at the level of the retrieval. Hence, the Identifier of a C-MOVE request may transfer:

— all composite object instances related to a study by only providing a Study Instance UID (0020,000D)

— all composite object instances related to a series by only providing a Series Instance UID (0020,000E)

— individual composite object instances by only providing a list of SOP Instance UIDs (0008,0018)

C.4.2.3 C-MOVE SCP Behavior

This section discusses both the baseline and extended behavior of the C-MOVE SCP.

C.4.2.3.1 Baseline Behavior of SCP

An SCP conveys the following semantics with a C-MOVE response:

— The SCP shall identify a set of Entities at the level of the transfer based upon the values in the Unique Keys in the Identifier of the C-MOVE request. The SCP shall initiate C-STORE sub-operations for the corresponding storage SOP Instances. These C-STORE sub-operations shall occur on a different Association from the C-MOVE operation. The SCP of the Query/Retrieve Service Class shall serve as an SCU of the Storage Service Class.

— The SCP shall establish a new Association for the C-STORE sub-operations. A sub-operation is considered Failed if the SCP is unable to negotiate an appropriate presentation context for a given stored SOP Instance.

— The SCP shall initiate C-STORE sub-operations over the new Association for all stored SOP Instances related to the Patient ID, List of Study Instance

Provided by IHS
No reproduction or networking permitted without license from IHS
Not for Resale

UIDs, List of Series Instance UIDs, or List of SOP Instance UIDs depending on the Query/Retrieve level specified in the C-MOVE request.

— Optionally, the SCP may generate responses to the C-MOVE with status equal to Pending during the processing of the C-STORE sub-operations. These responses shall indicate the Remaining, Successful, Failed, and Warning C-STORE sub-operations.

— When the number of Remaining sub-operations reaches zero, the SCP shall generate a final response with a status equal to Success, Warning, Failed, or Refused. This response shall indicate the number of Successful sub-operations, the number of Failed sub-operations, and the number of sub-operations with Warning Status. The status contained in the C-MOVE response shall contain:

— Successful if all sub-operations were successful

— Warning if one or more sub-operations were successful and one or more sub-operations were unsuccessful or had a warning status

— Warning if all sub-operations had a warning status

— Failed or Refused if all sub-operations were unsuccessful

— The SCP may receive a C-MOVE-CANCEL request at any time during the processing of the C-MOVE. The SCP shall interrupt all C-STORE sub-operation processing and return a status of Canceled in the C-MOVE response. The C-MOVE response with a status of Canceled shall contain the number of Successful, Failed, and Warning C-STORE sub-operations. If present, the Remaining sub-operations count shall contain the number of C-STORE sub-operations which were not initiated due to the C-MOVE-CANCEL request.

— If the SCP manages images in multiple alternate encodings (see C.6.1.1.5.1), only one of the alternate encodings of an image shall be included in the set of object instances retrieved by a C-MOVE request at the Patient, Study, or Series level.

Notes: 1. For retrieval of images with alternate encodings using a C-MOVE request at the Patient, Study, or Series level, the SCP may select the appropriately encoded Instance for the retrieval based on identity of the SCU, transfer syntaxes accepted in the C-STORE Association Negotiation, or other factors.

2. If the association on which the C-MOVE operation was issued is abnormally terminated, then it will not be possible to issue any further pending responses nor a final response, nor will C-MOVE-CANCEL requests be received. The behavior of the C-MOVE SCP acting as a C-STORE SCU is undefined in this condition. Specifically, whether or not any uncompleted C-STORE sub-operations continue is undefined.

C.4.2.3.2 Extended Behavior of SCP

Extended SCP behavior shall be negotiated at Association establishment time. If an option within the extended behavior is not agreed upon in the negotiation, then only baseline SCP behavior shall be performed with respect to that option. Extended SCP behavior includes all baseline behavior with the following option:

— Relational-retrieve

C.4.2.3.2.1 Relational-Retrieve

The C-MOVE Service with relational-retrieve removes the restriction that the SCU supply Unique Key values for levels above the Query/Retrieve level to help identify an entity at the level of the retrieval. Hence, the Identifier of a C-MOVE request may specify the transfer of:

--`,,```,,,,````-`-`,,`,,`,`,,`---

Provided by IHS
No reproduction or networking permitted without license from IHS Not for Resale

- all composite object instances related to a study by only providing a Study Instance UID (0020,000D)
- all composite object instances related to a series by only providing a Series Instance UID (0020,000E)
- individual composite object instances by only providing a list of SOP Instance UIDs (0008,0018)

C.4.3 C-GET Operation

SCUs of some SOP Classes of the Query/Retrieve Service Class may generate retrievals using the C-GET operation as described in PS 3.7. The C-GET operation allows an application entity to instruct another application entity to transfer stored SOP Instances to the initiating application entity using the C-STORE operation. Support for the C-GET service shall be agreed upon at Association establishment time by both the SCU and SCP of the C-GET in order for a C-GET operation to occur over the Association. The C-STORE Sub-operations shall be accomplished on the same Association as the C-GET operation. Hence, the SCP of the Query/Retrieve Service Class serves as the SCU of the Storage Service Class.

Note: The application entity which receives the stored SOP Instances is always the originator of the C-GET operation.

A C-GET request may be performed to any level of the Query/Retrieve Information Model. However, the transfer of stored SOP Instances may not be performed at this level. The level at which the transfer is performed depends upon the SOP Class.

C.4.3.1 C-GET Service Parameters

C.4.3.1.1 SOP Class UID

The SOP Class UID identifies the Query/Retrieve Information Model against which the C-GET is to be performed. Support for the SOP Class UID is implied by the Abstract Syntax UID of the Presentation Context used by this C-GET operation.

C.4.3.1.2 Priority

The Priority Attribute defines the requested priority of the C-GET operation and corresponding C-STORE sub-operations with respect to other DIMSE operations being performed by the same SCP.

Processing of priority requests is not required of SCPs. Whether or not an SCP supports priority processing, and the meaning of the different priority levels shall be stated in the Conformance Statement of the SCP. The same priority shall be used for all C-STORE sub-operations.

C.4.3.1.3 Identifier

The C-GET request shall contain an Identifier. The C-GET response shall conditionally contain an Identifier as required in C.4.3.1.3.2.

Note: The Identifier is specified as U in the definition of the C-GET primitive in PS 3.7 but is specialized for use with this service.

C.4.3.1.3.1 Request Identifier Structure

An Identifier in a C-GET request shall contain:

- the Query/Retrieve Level (0008,0052) which defines the level of the retrieval
- Unique Key Attributes which may include Patient ID (0010,0020), Study Instance UIDs (0020,000D) Series Instance UIDs (0020,000E), and SOP Instance UIDs (0008,0018)

--`,,```,,,,````-`-`,,`,,`,`,,`---

Provided by IHS
No reproduction or networking permitted without license from IHS Not for Resale

Specific Character Set (0008,0005) shall not be present.

The Unique Keys at each level of the hierarchy and the values allowable for the level of the retrieval shall be defined in the SOP Class definition for the Query/Retrieve Information Model.

Note: In the Baseline behavior, more than one entity may be retrieved if the Query/Retrieve Level is IMAGE, SERIES or STUDY, using List of UID matching, but only Single Value Matching value may be specified for Patient ID (0010,0020).

C.4.3.1.3.2 Response Identifier Structure

The Failed SOP Instance UID List (0008,0058) specifies a list of UIDs of the C-STORE sub-operation SOP Instances for which this C-GET operation has failed. An Identifier in a C-GET response shall conditionally contain the Failed SOP Instance UID List (0008,0058) based on the C-GET response. If no C-STORE sub-operation failed, Failed SOP Instance UID List (0008,0058) is absent and therefore no Data Set shall be sent in the C-GET response.

Specific Character Set (0008,0005) shall not be present.

The Identifier in a C-GET response with a status of:

— Canceled, Failed, Refused, or Warning shall contain the Failed SOP Instance UID List Attribute

— Pending shall not contain the Failed SOP Instance UID List Attribute (no Data Set)

C.4.3.1.4 Status

Table C.4-3 defines the specific status code values which might be returned in a C-GET response. General status code values and fields related to status code values are defined in PS 3.7.

Table C.4-3
C-GET RESPONSE STATUS VALUES

Service Status	Further Meaning	Status Codes	Related Fields
Failure	Refused: Out of Resources – Unable to calculate number of matches	A701	(0000,0902)
	Refused: Out of Resources – Unable to perform sub-operations	A702	(0000,1020) (0000,1021) (0000,1022) (0000,1023)
	Identifier does not match SOP Class	A900	(0000,0901) (0000,0902)
	Unable to process	Cxxx	(0000,0901) (0000,0902)
Cancel	Sub-operations terminated due to Cancel Indication	FE00	(0000,1020) (0000,1021) (0000,1022) (0000,1023)
Warning	Sub-operations Complete – One or more Failures or Warnings	B000	(0000,1020) (0000,1021) (0000,1022) (0000,1023)
Success	Sub-operations Complete – No Failures or Warnings	0000	(0000,1020)

--`,,```,,,,````-`-`,,`,,`,`,,`---

Provided by IHS
No reproduction or networking permitted without license from IHS Not for Resale

			(0000,1021) (0000,1022) (0000,1023)
Pending	Sub-operations are continuing	FF00	(0000,1020) (0000,1021) (0000,1022) (0000,1023)

C.4.3.1.5 Number of Remaining Sub-Operations

Inclusion of the Number of Remaining Sub-operations is conditional based upon the status in the C-GET response. The Number of Remaining Sub-operations specifies the number of Remaining C-STORE sub-operations necessary to complete the C-GET operation.

A C-GET response with a status of:

- Pending shall contain the Number of Remaining Sub-operations Attribute
- Canceled may contain the Number of Remaining Sub-operations Attribute
- Warning, Failed, Refused, or Successful shall not contain the Number of Remaining Sub-operations Attribute.

C.4.3.1.6 Number of Successful Sub-Operations

Inclusion of the Number of Successful Sub-operations is conditional based upon the status in the C-GET response. The Number of Successful Sub-operations specifies the number of C-STORE sub-operations generated by the requested transfer which have completed successfully.

A C-GET response with a status of:

- Pending shall contain the Number of Successful Sub-operations Attribute
- Canceled, Warning, Failed, Refused, or Successful may contain the Number of Successful Sub-operations Attribute

C.4.3.1.7 Number of Failed Sub-Operations

Inclusion of the Number of Failed Sub-operations is conditional based upon the status in the C-GET response. The Number of Failed Sub-operations specifies the number of C-STORE sub-operations generated by the requested transfer which have Failed.

A C-GET response with a status of:

- Pending shall contain the Number of Failed Sub-operations Attribute
- Canceled, Warning, Failed, Refused, or Successful may contain the Number of Failed Sub-operations Attribute

C.4.3.1.8 Number of Warning Sub-Operations

Inclusion of the Number of Warning Sub-operations is conditional based upon the status in the C-GET response. The Number of Warning Sub-operations specifies the number of C-STORE sub-operations generated by the requested transfer which had a status of Warning.

A C-GET response with a status of:

- Pending shall contain the Number of Warning Sub-operations Attribute
- Canceled, Warning, Failed, Refused, or Successful may contain the Number of Warning Sub-operations Attribute

Provided by IHS
No reproduction or networking permitted without license from IHS Not for Resale

C.4.3.2 C-GET SCU Behavior

This Section discusses both the baseline and extended behavior of the C-GET SCU.

C.4.3.2.1 Baseline Behavior of SCU

An SCU conveys the following semantics with a C-GET request:

- The SCU shall have proposed sufficient presentation contexts at Association establishment time to accommodate expected C-STORE sub-operations which shall occur over the same Association. The SCU of the Query/Retrieve Service Class shall serve as the SCP of the Storage Service Class.
- The SCU shall supply a single value in the Unique Key Attribute for each level above the Query/Retrieve level. For the level of retrieve, the SCU shall supply one unique key if the level of the retrieve is above the STUDY level and shall supply one UID, or a list of UIDs if a retrieval of several items is desired and the retrieve level is STUDY, SERIES or IMAGE.
- The SCU shall interpret C-GET responses with status equal to Pending during the processing of the C-STORE sub-operations. These responses shall indicate the number of Remaining, Successful, Failed, Warning C-STORE sub-operations.
- The SCU shall interpret a C-GET response with a status equal to Success, Warning, Failed, or Refused as a final response. The final response shall indicate the number of Successful sub-operations and the number of Failed C-STORE sub-operations resulting from the C-GET operation. The SCU shall interpret a status of:
- Success to indicate that all sub-operations were successful
- Warning to indicate one or more sub-operations were successful and one or more unsuccessful or all sub-operations had a status of warning
- Failed or Refused to indicate all sub-operations were unsuccessful
- The SCU may cancel the C-GET operation by issuing a C-GET-CANCEL request at any time during the processing of the C-GET request. A C-GET response with a status of Canceled shall indicate to the SCU that the retrieve was canceled. Optionally, the C-GET response with a status of Canceled shall indicate the number of Successful, Failed, and Warning C-STORE sub-operations. If present, the Remaining sub-operations count shall contain the number of C-STORE sub-operations which were not initiated due to the C-GET-CANCEL request.

C.4.3.2.2 Extended Behavior of SCU

Extended SCU behavior shall be negotiated at Association establishment time. If an option within the extended behavior is not agreed upon in the negotiation, then only baseline SCU behavior shall be supported with respect to that option. Extended SCU behavior includes all baseline behavior with the following option:

- Relational-retrieve

C.4.3.2.2.1 Relational-Retrieve

The C-GET Service with relational-retrieve removes the restriction that the SCU supply Unique Key values for levels above the Query/Retrieve level to help identify an entity at the level of the retrieval. Hence, the Identifier of a C-GET request may retrieve:

- all composite object instances related to a study by providing a Study Instance UID (0020,000D)

Provided by IHS
No reproduction or networking permitted without license from IHS
Not for Resale

- all composite object instances related to a series by providing a Series Instance UID (0020,000E)
- individual composite object instances by providing a list of SOP Instance UIDs (0008,0018)

C.4.3.3 C-GET SCP Behavior

This Section discusses both the baseline and extended behavior of the C-GET SCP.

C.4.3.3.1 Baseline Behavior of SCP

An SCP conveys the following semantics with a C-GET response:

- The SCP shall identify a set of Entities at the level of the retrieval based upon the values in the Unique Keys in the Identifier of the C-GET request. The SCP shall initiate C-STORE sub-operations for the corresponding storage SOP Instances. The SCP of the Query/Retrieve Service Class shall serve as an SCU of the Storage Service Class.
- The SCP shall initiate C-STORE sub-operations over the same Association for all stored SOP Instances related to the Patient ID, List of Study Instance UIDs, List of Series Instance UIDs, or List of SOP Instance UIDs depending on the Query/Retrieve level specified in the C-GET request
- A sub-operation is considered Failed if the SCP is unable to initiate a C-STORE sub-operation because the Query/Retrieve SCU did not offer an appropriate presentation context for a given stored SOP Instance.
- Optionally, the SCP may generate responses to the C-GET with status equal to Pending during the processing of the C-STORE sub-operations. These responses shall indicate the number of Remaining, Successful, Failed, and Warning C-STORE sub-operations.
- When the number of Remaining sub-operations reaches zero, the SCP shall generate a final response with a status equal to Success, Warning, Failed, or Refused. The status contained in the C-GET response shall contain:
- Success if all sub-operations were successful
- Warning if one or more sub-operations were successful and one or more sub-operations were unsuccessful or had a status of warning
- Warning if all sub-operations had a status of Warning
- Failed or Refused if all sub-operations were unsuccessful
- The SCP may receive a C-GET-CANCEL request at any time during the processing of the C-GET request. The SCP shall interrupt all C-STORE sub-operation processing and return a status of Canceled in the C-GET response. The C-GET response with a status of Canceled shall contain the number of Successful, Failed, and Warning C-STORE sub-operations. If present, the Remaining sub-operations count shall contain the number of C-STORE sub-operations which were not initiated due to the C-GET-CANCEL request.
- If the SCP manages images in multiple alternate encodings (see C.6.1.1.5.1), only one of the alternate encodings of an image shall be included in the set of object instances retrieved by a C-GET request at the Patient, Study, or Series level.

Note: For retrieval of images with alternate encodings using a C-GET request at the Patient, Study, or Series level, the SCP may select the appropriately encoded Instance for the retrieval based on identity of the SCU, transfer syntaxes accepted in the C-STORE Association Negotiation, or other factors.

Provided by IHS
No reproduction or networking permitted without license from IHS
Not for Resale

C.4.3.3.2 Extended Behavior of SCP

Extended SCP behavior shall be negotiated at Association establishment time. If an option within the extended behavior is not agreed upon in the negotiation, then only baseline SCP behavior shall be performed with respect to that option. Extended SCP behavior includes all baseline behavior with the following option:

— Relational-retrieve

C.4.3.3.2.1 Relational-Retrieve

The C-GET Service with relational-retrieve removes the restriction that the SCU supply Unique Key values for levels above the Query/Retrieve level to help identify an entity at the level of the retrieval. Hence, the Identifier of a C-GET request may retrieve:

— all composite object instances related to a study by providing a Study Instance UID
— all composite object instances related to a series by providing a Series Instance UID
— individual composite object instances by providing a list of SOP Instance UIDs

C.5 ASSOCIATION NEGOTIATION

Association establishment is the first phase of any instance of communication between peer DICOM AEs. AEs supporting DICOM Query/Retrieve SOP Classes utilize Association establishment negotiation by defining the use of Application Association Information. See PS 3.7 for an overview of Association negotiation.

SOP Classes of the Query/Retrieve Service Class, which include query services based on the C-FIND operation, may use SOP Class Extended Negotiation Sub-Item to negotiate options such as Relational-queries.

SOP Classes of the Query/Retrieve Service Class, which include retrieval services based on the C-MOVE and C-GET operations, may use the SOP Class Extended Negotiation Sub-Item to negotiate relational-retrieval.

SOP Classes of the Query/Retrieve Service Class, which include retrieval services based on the C-GET operation, use the SCP/SCU Role Selection Sub-Item to identify the SOP Classes which may be used for retrieval.

C.5.1 Association Negotiation for C-FIND SOP Classes

The following negotiation rules apply to DICOM SOP Classes and Specialized DICOM SOP Classes of the Query/Retrieve Service Class which include the C-FIND operation.

The Association-requester (query SCU role) shall convey in the A-ASSOCIATE request:

— one Abstract Syntax, in a Presentation Context, for each query based SOP Class supported
— optionally, one SOP Class Extended Negotiation Sub-Item, for each query based SOP Class

The Association-acceptor (query SCP role) of an A-ASSOCIATE request shall accept:

— one Abstract Syntax, in a Presentation Context, for each query based SOP Class supported

Provided by IHS
No reproduction or networking permitted without license from IHS
Not for Resale

— optionally, one SOP Class Extended Negotiation Sub-Item, for each query based SOP Class

C.5.1.1 SOP Class Extended Negotiation

The SOP Class Extended Negotiation allows, at Association establishment, peer DICOM AEs to exchange application Association information defined by specific SOP Classes. This is achieved by defining the Service-class-application-information field. The Service-class-application-information field is used to define support for relational-queries.

This negotiation is optional. If absent, the default conditions shall be:

— no relational-query support

The Association-requester, for each SOP Class, may use one SOP Class Extended Negotiation Sub-Item. The SOP Class is identified by the corresponding Abstract Syntax Name (as defined by PS 3.7) followed by the Service-class-application-information field. This field defines:

— relational-query support by the Association-requester

The Association-acceptor, for each SOP Class Extended Negotiation Sub-Item offered, either accepts the Association-requester proposal by returning the same value (1) or turns down the proposal by returning the value (0)

If the SOP Class Extended Negotiation Sub-Item is not returned by the Association-acceptor then relational-queries are not supported over the Association (default condition).

If the SOP Class Extended Negotiation Sub-Items do not exist in the A-ASSOCIATE indication they shall be omitted in the A-ASSOCIATE response.

C.5.1.1.1 SOP Class Extended Negotiation Sub-Item Structure (A-ASSOCIATE-RQ)

The SOP Class Extended Negotiation Sub-Item consists of a sequence of mandatory fields as defined by PS 3.7. Table C.5-1 defines the Service-class-application-information field for DICOM Query/Retrieve SOP Classes and Specialized DICOM Query/Retrieve SOP Classes which include the C-FIND operation.

Table C.5-1—SOP CLASS EXTENDED NEGOTIATION SUB-ITEM (service-class-application-information field)—A-ASSOCIATE-RQ

Item Bytes	Field Name	Description of Field
1	Relational-queries	This byte field defines relational-query support by the Association-requester. It shall be encoded as an unsigned binary integer and shall use one of the following values 0 – relational queries not supported 1 – relational queries supported

C.5.1.1.2 SOP Class Extended Negotiation Sub-Item Structure (A-ASSOCIATE-AC)

The SOP Class Extended Negotiation Sub-Item is made of a sequence of mandatory fields as defined by PS 3.7. Table C.5-2 defines the Service-class-application-information field for DICOM Query/Retrieve SOP Classes and Specialized DICOM Query/Retrieve SOP Classes which include the C-FIND operation.

Provided by IHS
No reproduction or networking permitted without license from IHS
Not for Resale

Table C.5-2—SOP CLASS EXTENDED NEGOTIATION SUB-ITEM (service-class-application-information field)—A-ASSOCIATE-AC

Item Bytes	Field Name	Description of Field
1	Relational-queries	This byte field defines relational-query support for the Association-acceptor. It shall be encoded as an unsigned binary integer and shall use one of the following values 0 – relational-queries not supported 1 – relational-queries supported

C.5.2 Association Negotiation for C-MOVE SOP Classes

The following negotiation rules apply to DICOM SOP Classes and Specialized DICOM SOP Classes of the Query/Retrieve Service Class which include the C-MOVE operation.

The Association-requester (retrieval SCU role) shall convey in the A-ASSOCIATE request:

— one Abstract Syntax, in a Presentation Context, for each retrieval based SOP Class supported
— optionally, one SOP Class Extended Negotiation Sub-Item, for each retrieval based SOP Class

The Association-acceptor (retrieval SCP role) of an A-ASSOCIATE request shall accept:

— one Abstract Syntax, in a Presentation Context, for each retrieval based SOP Class supported
— optionally, one SOP Class Extended Negotiation Sub-Item, for each retrieval based SOP Class

C.5.2.1 SOP Class Extended Negotiation

The SOP Class Extended Negotiation allows, at Association establishment, peer DICOM AEs to exchange application Association information defined by specific SOP Classes. This is achieved by defining the Service-class-application-information field. The Service-class-application-information field is used to define support for relational-retrievals.

This negotiation is optional. If absent, the default condition shall be:

— no relational-retrieval support

The Association-requester, for each SOP Class, may use one SOP Class Extended Negotiation Sub-Item. The SOP Class is identified by the corresponding Abstract Syntax Name (as defined by PS 3.7) followed by the Service-class-application-information field. This field defines:

— relational-retrieval support by the Association-requester

The Association-acceptor, for each SOP Class Extended Negotiation Sub-Item offered, either accepts the Association-requester proposal by returning the same value (1) or turns down the proposal by returning the value (0).

If the SOP Class Extended Negotiation Sub-Item is not returned by the Association-acceptor then relational-retrievals are not supported (default condition)

If the SOP Class Extended Negotiation Sub-Items do not exist in the A-ASSOCIATE indication they shall be omitted in the A-ASSOCIATE response.

Provided by IHS
No reproduction or networking permitted without license from IHS
Not for Resale

C.5.2.1.1 SOP Class Extended Negotiation Sub-Item Structure (A-ASSOCIATE-RQ)

The SOP Class Extended Negotiation Sub-Item consists of a sequence of mandatory fields as defined by PS 3.7. Table C.5-3 defines the Service-class-application-information field for DICOM Query/Retrieve SOP Classes and Specialized DICOM Query/Retrieve SOP Classes which include the C-MOVE and C-GET operations.

Table C.5-3—SOP CLASS EXTENDED NEGOTIATION SUB-ITEM (service-class-application-information field)—A-ASSOCIATE-RQ

Item Bytes	Field Name	Description of Field
1	Relational-retrieval	This byte field defines relational-retrieval support by the Association-requester. It shall be encoded as an unsigned binary integer and shall use one of the following values 0 – relational-retrieval not supported 1 – relational-retrieval supported

C.5.2.1.2 SOP Class Extended Negotiation Sub-Item Structure (A-ASSOCIATE-AC)

The SOP Class Extended Negotiation Sub-Item consists of a sequence of mandatory fields as defined by PS 3.7. Table C.5-4 defines the Service-class-application-information field for DICOM Query/Retrieve SOP Classes and Specialized DICOM Query/Retrieve SOP Classes which include the C-MOVE and C-GET operations.

Table C.5-4—SOP CLASS EXTENDED NEGOTIATION SUB-ITEM (service-class-application-information field)—A-ASSOCIATE-AC

Item Bytes	Field Name	Description of Field
1	Relational-retrieval	This byte field defines relational-retrieval support for the Association-acceptor. It shall be encoded as an unsigned binary integer and shall use one of the following values 0 – relational-retrievals not supported 1 – relational-retrievals supported

C.5.3 Association Negotiation for C-GET SOP Classes

When an SCP performs the C-GET operation it induces a C-STORE operation for the purpose of transmitting composite SOP Instances for Storage. This induced C-STORE operation (called a sub-operation) requires a switch from the C-GET Presentation Context to a Presentation Context that supports the specific C-STOREsub-operation.

The following negotiation rules apply to retrieval based DICOM Query/Retrieve SOP Classes and Specialized DICOM Query/Retrieve SOP Classes which include the C-GET operation.

The Association-requester (retrieve SCU role) in the A-ASSOCIATE request shall convey:

a) C-GET operation support with:
   - one Abstract Syntax, in a Presentation Context, for each SOP Class supported
   - and optionally, one SOP Class Extended Negotiation Sub-Item, for each retrieval based SOP Class

Provided by IHS
No reproduction or networking permitted without license from IHS
Not for Resale

b) Induced Storage sub-operation support where the SOP Class (in the retrieval SCU role) is acting as a Storage SOP Class in the SCP Role. See Figure C.5-1. For each supported Storage SOP Class, the A-ASSOCIATE request contains:

— one Abstract Syntax in a Presentation Context

— one SCP/SCU Role Selection Negotiation Sub-item with the SCP-role field set to indicate support of the SCP role. The SCP/SCU Role Selection Negotiation shall be used as defined in PS 3.7.

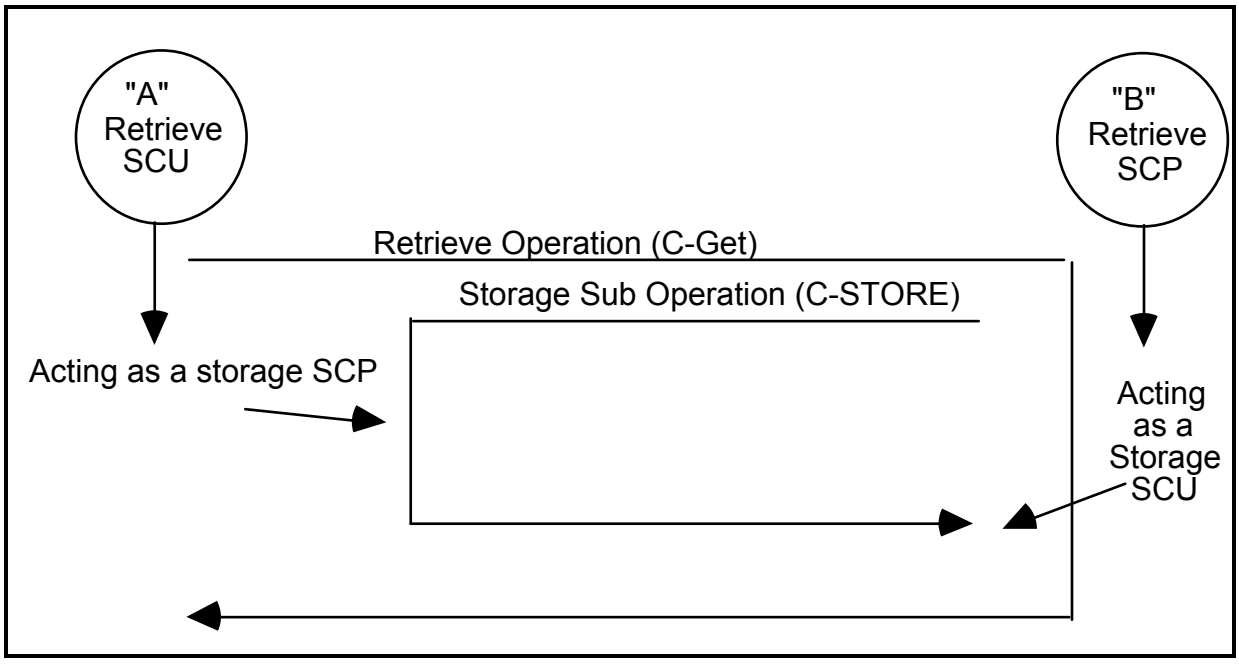

Figure C.5-1
AN EXAMPLE OF THE SUB-OPERATION SCU/SCP ROLES

Note: This negotiation does not place any requirements on the SCU-flag of the SCP/SCU Role Selection Negotiation Sub-Item. It may be set if the Association-requester supports the Storage Service Class in the SCU role.

The Association-acceptor (retrieve SCP role) in the A-ASSOCIATE response shall convey:

a) C-GET operation support with:

— one Abstract Syntax, in a Presentation Context, for each SOP Class supported

b) Induced Storage sub-operation support where the SOP Class (using the retrieval SCP role) is acting as a Storage SOP Class in the SCU Role. See Figure C.5-1. For each supported Storage SOP Class, the A-ASSOCIATE response contains both:

— one Abstract Syntax, in a Presentation Context

— one SCP/SCU Role Selection Negotiation Sub-item with the SCP-role field set to indicate the acceptance of the Association-requester's support of the SCP role. The SCP/SCU Role Selection Negotiation shall be used as defined in PS 3.7.

Note: The negotiation does not place any requirements on the SCU-flag of the SCP/SCU Role Selection Negotiation Sub-Item. It may be set if the Association-acceptor accepts the Storage

Provided by IHS
No reproduction or networking permitted without license from IHS
Not for Resale

SCP role. Figure C.5-2 illustrates an example of the retrieve (C-GET) negotiation.

Figure C.5-2 illustrates an example of the retrieve (C-GET) negotiation.

C.5.3.1 SOP Class Extended Negotiation

The SOP Class Extended Negotiation allows, at Association establishment, peer DICOM AEs to exchange application Association information defined by specific SOP Classes.

This is achieved by defining the Service-class-application-information field. The Service-class-application-information field is used to define support for relational-retrievals.

Provided by IHS
No reproduction or networking permitted without license from IHS
Not for Resale

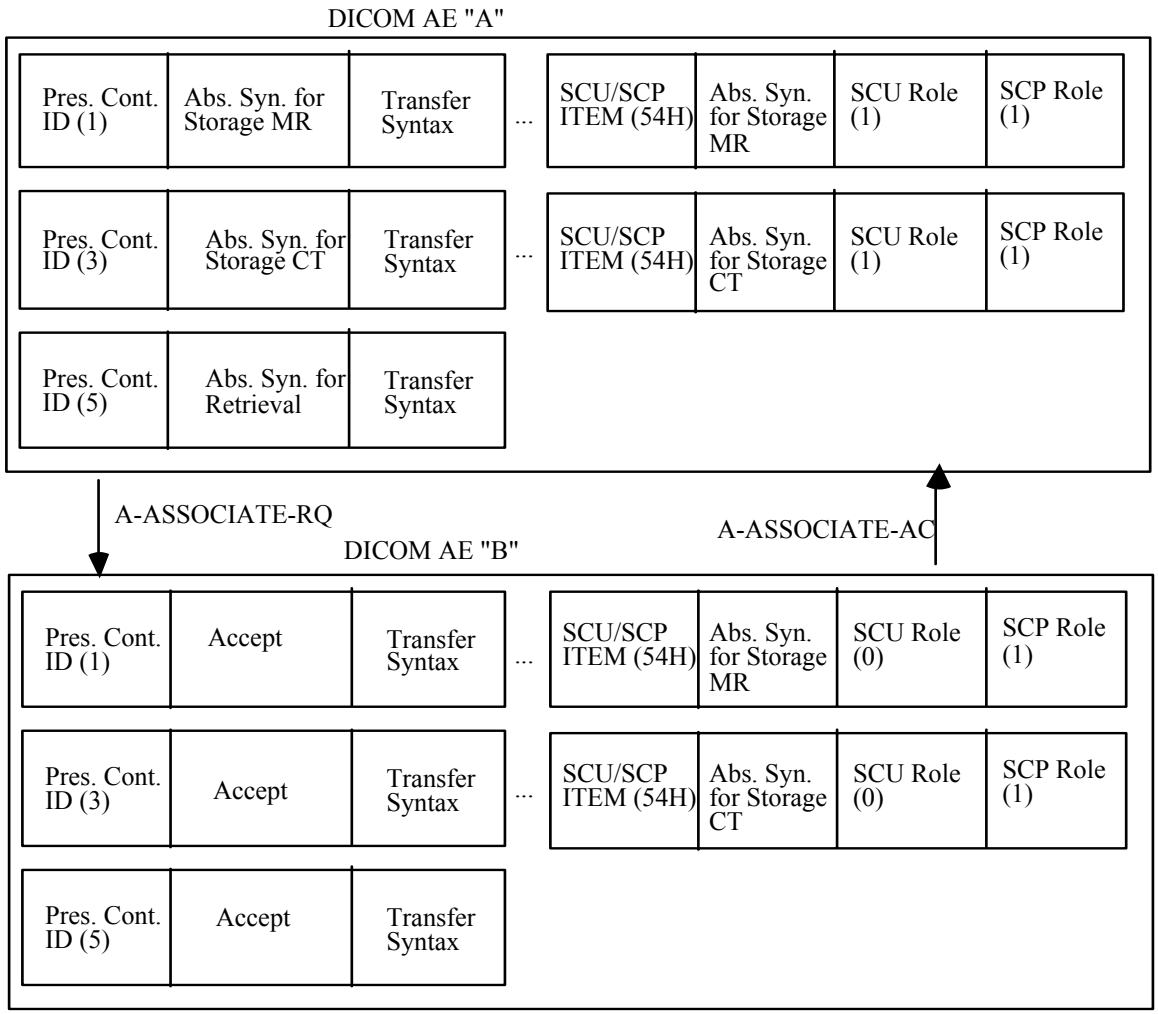

- AE "B" accepts the role of Retrieve SCP
- AE "B" rejects the role of Storage SCP (Does not allow AE "A" to be a Storage SCU)

Figure C.5-2
AN EXAMPLE OF THE RETRIEVE (C-GET) NEGOTIATION

Extended negotiation for SOP Classes based on the retrieval services which include C-GET operations is identical to the negotiation defined for C-MOVE which is defined in Section C.5.2.1 of this Annex.

Extended negotiation for the SOP Classes of the Storage Service Class (for the C-STORE sub-operation) is defined in Annex B.

C.6 SOP CLASS DEFINITIONS

C.6.1 Patient Root SOP Class Group

In the Patient Root Query/Retrieve Information Model, the information is arranged into four levels which correspond to one of the four values in element (0008,0052) shown in Table C.6.1-1.

Provided by IHS
No reproduction or networking permitted without license from IHS
Not for Resale

Table C.6.1-1
Query/Retrieve Level Values for Patient Root

Query/Retrieve Level	Value in (0008,0052)
Patient Information	PATIENT
Study Information	STUDY
Series Information	SERIES
Composite object instance Information	IMAGE

Note: The use of the word “Images” rather than “composite object instances” is historical to allow backward compatibility with previous versions of the standard. It should not be taken to mean that composite object instances of other than image type are not included at the level indicated by the value IMAGE.

Provided by IHS
No reproduction or networking permitted without license from IHS
Not for Resale

C.6.1.1 Patient Root Query/Retrieve Information Model

C.6.1.1.1 E/R Model

The Patient Root Query/Retrieve Information Model may be represented by the entity relationship diagram shown in Figure C.6-1.

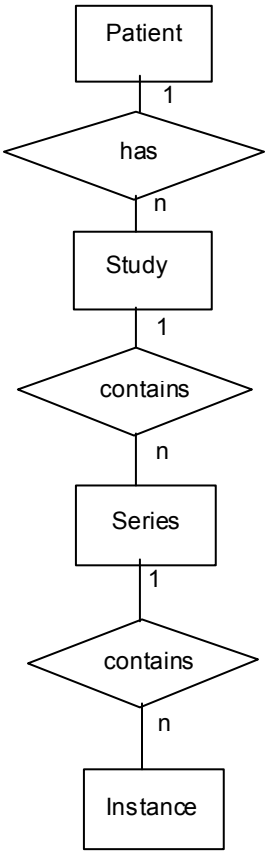

Figure C.6-1
PATIENT ROOT QUERY/RETRIEVE INFORMATION MODEL E/R DIAGRAM

C.6.1.1.2 Patient Level

Table C.6-1 defines the Attributes at the Patient Query/Retrieve level of the Patient Root Query/Retrieve Information Model.

Notes: 1. A description of the attributes of this Information Model is contained in Section C.3 of this part.

2. Although the Patient ID may not be globally unique, the Study Instance UID is globally unique ensuring that no two studies may be misidentified.

Table C.6-1
PATIENT LEVEL ATTRIBUTES FOR THE PATIENT ROOT QUERY/RETRIEVE INFORMATION MODEL

Description	Tag	Type
Patient's Name	(0010,0010)	R
Patient ID	(0010,0020)	U
Referenced Patient Sequence	(0008,1120)	O

Provided by IHS
No reproduction or networking permitted without license from IHS
Not for Resale

>Referenced SOP Class UID	(0008,1150)	O
>Referenced SOP Instance UID	(0008,1155)	O
Patient's Birth Date	(0010,0030)	O
Patient's Birth Time	(0010,0032)	O
Patient's Sex	(0010,0040)	O
Other Patient Ids	(0010,1000)	O
Other Patient Names	(0010,1001)	O
Ethnic Group	(0010,2160)	O
Patient Comments	(0010,4000)	O
Number of Patient Related Studies	(0020,1200)	O
Number of Patient Related Series	(0020,1202)	O
Number of Patient Related Instances	(0020,1204)	O
All other Attributes at Patient Level		O

C.6.1.1.3 Study Level

Table C.6-2 defines the keys at the Study Information level of the Patient Root Query/Retrieve Information Model.

Notes: 1. A description of the attributes of this Information Model is contained in Section C.3 of this Part.

2. Although the Patient ID may not be globally unique, the Study Instance UID is globally unique ensuring that no two studies may be mis-identified.

Table C.6-2
STUDY LEVEL KEYS FOR THE PATIENT ROOT QUERY/RETRIEVE INFORMATION MODEL

Description	Tag	Type
Study Date	(0008,0020)	R
Study Time	(0008,0030)	R
Accession Number	(0008,0050)	R
Study ID	(0020,0010)	R
Study Instance UID	(0020,000D)	U
Modalities in Study	(0008,0061)	O
SOP Classes in Study	(0008,0062)	O
Referring Physician's Name	(0008,0090)	O
Study Description	(0008,1030)	O
Procedure Code Sequence	(0008,1032)	O
>Code Value	(0008,0100)	O
>Coding Scheme Designator	(0008,0102)	O
>Coding Scheme Version	(0008,0103)	O
>Code Meaning	(0008,0104)	O
Name of Physician(s) Reading Study	(0008,1060)	O

--`,,```,,,,````-`-`,,`,,`,`,,`---

Provided by IHS
No reproduction or networking permitted without license from IHS Not for Resale

Admitting Diagnoses Description	(0008,1080)	O
Referenced Study Sequence	(0008,1110)	O
>Referenced SOP Class UID	(0008,1150)	O
>Referenced SOP Instance UID	(0008,1155)	O
Issuer of Patient ID	(0010,0021)	O
Patient's Age	(0010,1010)	O
Patient's Size	(0010,1020)	O
Patient's Weight	(0010,1030)	O
Occupation	(0010,2180)	O
Additional Patient History	(0010,21B0)	O
Other Study Numbers	(0020,1070)	O
Number of Study Related Series	(0020,1206)	O
Number of Study Related Instances	(0020,1208)	O
Interpretation Author	(4008,010C)	O
All other Attributes at Study Level		O

C.6.1.1.4 Series Level

Table C.6-3 defines the keys at the Series Information level of the Patient Root Query/Retrieve Information Model.

Table C.6-3
SERIES LEVEL ATTRIBUTES FOR THE PATIENT ROOT QUERY/RETRIEVE INFORMATION MODEL

Description	Tag	Type
Modality	(0008,0060)	R
Series Number	(0020,0011)	R
Series Instance UID	(0020,000E)	U
Number of Series Related Instances	(0020,1209)	O
All Other Attributes at Series Level		O

Note: The Attribute Number of Series Related Instances is an optional key. It is, however recognized as a broadly needed key and return attribute which SCPs are strongly encouraged to support.

Provided by IHS
No reproduction or networking permitted without license from IHS
Not for Resale

C.6.1.1.5 Composite object instance Level

Table C.6-4 defines the keys at the Composite object instance Information level of the Patient Root Query/Retrieve Information Model.

Table C.6-4
COMPOSITE OBJECT INSTANCE LEVEL KEYS FOR THE PATIENT ROOT QUERY/RETRIEVE INFORMATION MODEL

Description	Tag	Type
Instance Number	(0020,0013)	R
SOP Instance UID	(0008,0018)	U
SOP Class UID	(0008,0016)	O
Alternate Representation Sequence	(0008,3001)	O
>Series Instance UID	(0020,000E)	O
>SOP Class UID	(0008,1150)	O
>SOP Instance UID	(0008,1155)	O
>Purpose of Reference Code Sequence	(0040,A170)	O
>>Code Value	(0008,0100)	O
>>Coding Scheme Designator	(0008,0102)	O
>>Coding Scheme Version	(0008,0103)	O
>>Code Meaning	(0008,0104)	O
Related General SOP Class UID	(0008,001A)	O
Concept Name Code Sequence	(0040,A043)	O
>Code Value	(0008,0100)	O
>Coding Scheme Designator	(0008,0102)	O
>Coding Scheme Version	(0008,0103)	O
>Code Meaning	(0008,0104)	O
Content Template Sequence	(0040,A504)	O
>Template Identifier	(0040,DB00)	O
>Mapping Resource	(0008,0105)	O
All Other Attributes at composite object instance Level		O

Notes: 1. SOP Class UID (0008,0016) is an optional key, but it is strongly recommended that it always be returned by all SCPs, if matching is requested.

2. The Concept Name Code Sequence (0040,A043) and Content Template Sequence (0040,A504) are optional keys that are useful for identifying instances of various Structured Reporting Storage SOP Classes. It is strongly recommended that these keys be supported by the SCP for query against such instances.

C.6.1.1.5.1 Alternate Representation Sequence

The Alternate Representation Sequence (0008,3001) encodes a reference to an alternate encoding of the composite image identified in the Query response item. This alternate encoding

Provided by IHS
No reproduction or networking permitted without license from IHS
Not for Resale

may utilize a different SOP Class or have different image quality characteristics, but it shall be the same image.

Note: The Alternate Representation Sequence (0008,3001)allows the query response about an original image to reference a lossy compressed version, and vice versa.

An image may be lossy compressed, e.g., for long-term archive purposes, and its SOP Instance UID changed. An application processing a SOP Instance that references the original image UID, e.g., a Structured Report, may query the C-FIND SCP for the image. The SCP returns a reference to an accessible version of the image even if the original SOP Instance is no longer available.

The Alternate Representation Sequence (0008,3001), if present in a Query Request Identifier, shall be zero-length, or shall contain a single zero-length Item. That is, only Universal Matching is defined for this attribute.

The Alternate Representation Sequence (0008,3001), if present in the Query Response Identifier, may include zero or more Items. Each Alternate Representation Sequence Item in the Query Response Identifier shall include

- the Series Instance UID (0020,000E) if the alternately encoded image is in a different Series.
- the SOP Class UID (0008,0016) and SOP Instance UID (0008,0018) of the alternately encoded image.
- the Purpose of Reference Code Sequence (0040,A170), which shall describe the nature of the alternate encoding of the image. The Purpose of Reference Code Sequence (0040,A170) shall include only one Item. The Baseline Context Group for this Code Sequence is CID 7205.

C.6.1.1.6 Scope of the GET and MOVE Commands and Sub-Operations

A C-MOVE or C-GET request may be performed to any level of the Query/Retrieve Model. However, the transfer of Stored SOP Instances shall always take place at the Composite object instance level. A C-MOVE or C-GET where the Query/Retrieve level is the:

- PATIENT level indicates that all composite object instances related to a Patient shall be transferred.
- STUDY level indicates that all composite object instances related to a Study shall be transferred.
- SERIES level indicates that all composite object instances related to a Series shall be transferred.
- IMAGE level indicates that selected individual composite object instances shall be transferred.

Note: In the Baseline behavior, more than one entity may be retrieved if the Query/Retrieve Level is IMAGE, SERIES or STUDY, using List of UID matching, but only Single Value Matching value may be specified for Patient ID (0010,0020).

C.6.1.2 Conformance Requirements

An implementation may conform to one of the SOP Classes of the Patient Root SOP Class Group as an SCU, SCP or both. The Conformance Statement shall be in the format defined in PS 3.2.

Provided by IHS
No reproduction or networking permitted without license from IHS
Not for Resale

C.6.1.2.1 SCU Conformance

C.6.1.2.1.1 C-FIND SCU Conformance

An implementation which conforms to one of the SOP Classes of the Patient Root SOP Class Group shall support queries against the Query/Retrieve Information Model described in Section C.6.1.1 using the baseline C-FIND SCU Behavior described in Section C.4.1.2.

An implementation which conforms to one of the SOP Classes of the Patient Root SOP Class Group as an SCU shall state in its Conformance Statement whether it supports Optional Keys. If it supports Optional Keys, then it shall list the Optional Keys which it supports.

An implementation which conforms to one of the SOP Classes of the Patient Root SOP Class Group as an SCU shall state in its Conformance Statement whether it may generate Relational-queries. If it supports Relational-queries, then it shall also support extended negotiation.

An implementation which conforms to one of the SOP Classes of the Patient Root SOP Class Group as an SCU shall state in its Conformance Statement how it makes use of Specific Character Set (0008,0005) when encoding queries and interpreting responses.

C.6.1.2.1.2 C-MOVE SCU Conformance

An implementation which conforms to one of the SOP Classes of the Patient Root SOP Class Group as an SCU shall support transfers against the Query/Retrieve Information Model described in Section C.6.1.1 using the C-MOVE SCU Behavior described in Section C.4.2.2.

C.6.1.2.1.3 C-GET SCU Conformance

An implementation which conforms to one of the SOP Classes of the Patient Root SOP Class Group as an SCU shall support retrievals against the Query/Retrieve Information Model described in Section C.6.1.1 using the C-GET SCU Behavior described in Section C.4.3.2.

An implementation which conforms to one of the SOP Classes of the Patient Root SOP Class Group as an SCU, which generates retrievals using the C-GET operation, shall state in its Conformance Statement the Storage Service Class SOP Classes under which it shall support the C-STORE sub-operations generated by the C-GET.

C.6.1.2.2 SCP Conformance

C.6.1.2.2.1 C-FIND SCP Conformance

An implementation which conforms to one of the SOP Classes of the Patient Root SOP Class Group shall support queries against the Query/Retrieve Information Model described in Section C.6.1.1 using the C-FIND SCP Behavior described in Section C.4.1.3.

An implementation which conforms to one of the SOP Classes of the Patient Root SOP Class Group as an SCP shall state in its Conformance Statement whether it supports Optional Keys. If it supports Optional Keys, then it shall list the Optional Keys which it supports.

An implementation which conforms to one of the SOP Classes of the Patient Root SOP Class Group as an SCP shall state in its Conformance Statement whether it supports Relational-queries. If it supports Relational-queries, then it shall also support extended negotiation.

An implementation which conforms to one of the SOP Classes of the Patient Root SOP Class Group as an SCP shall state in its Conformance Statement whether it supports case-insensitive matching for PN VR attributes and list attributes for which this applies.

An implementation which conforms to one of the SOP Classes of the Patient Root SOP Class Group as an SCP shall state in its Conformance Statement how it makes use of Specific Character Set (0008,0005) when interpreting queries, performing matching and encoding responses.

Provided by IHS
No reproduction or networking permitted without license from IHS
Not for Resale

C.6.1.2.2.2 C-MOVE SCP Conformance

An implementation which conforms to one of the SOP Classes of the Patient Root SOP Class Group as an SCP shall support transfers against the Query/Retrieve Information Model described in Section C.6.1.1 using the C-MOVE SCP Behavior described in Section C.4.2.3.

An implementation which conforms to one of the SOP Classes of the Patient Root SOP Class Group as an SCP, which generates transfers using the C-MOVE operation shall state in its Conformance Statement the Storage Service Class SOP Classes under which it shall support the C-STORE sub-operations generated by the C-MOVE.

C.6.1.2.2.3 C-GET SCP Conformance

An implementation which conforms to one of the SOP Classes of the Patient Root SOP Class Group as an SCP shall support retrievals against the Query/Retrieve Information Model described in Section C.6.1.1 using the C-GET SCP Behavior described in Section C.4.3.3.

An implementation which conforms to one of the SOP Classes of the Patient Root SOP Class Group as an SCP, which generates retrievals using the C-GET operation, shall state in its Conformance Statement the Storage Service Class SOP Classes under which it shall support the C-STORE sub-operations generated by the C-GET.

C.6.1.3 SOP Classes

The SOP Classes in the Patient Root Query SOP Class Group of the Query/Retrieve Service Class identify the Patient Root Query/Retrieve Information Model, and the DIMSE-C operations supported. The Standard SOP Classes are listed in Table C.6.1.3-1.

Table C.6.1.3-1
SOP Classes for Patient Root Query/Retrieve

SOP Class Name	SOP Class UID
Patient Root Query/Retrieve Information Model – FIND	1.2.840.10008.5.1.4.1.2.1.1
Patient Root Query/Retrieve Information Model – MOVE	1.2.840.10008.5.1.4.1.2.1.2
Patient Root Query/Retrieve Information Model – GET	1.2.840.10008.5.1.4.1.2.1.3

C.6.2 Study Root SOP Class Group

In the Study Root Query/Retrieve Information Model, the information is arranged into three levels which correspond to one of the three values in element (0008,0052) shown in Table C.6.2-1.

Table C.6.2-1
Query/Retrieve Level Values for Study Root

Query/Retrieve Level	Value in (0008,0052)
Study Information	STUDY
Series Information	SERIES
Composite object instance Information	IMAGE

Provided by IHS
No reproduction or networking permitted without license from IHS
Not for Resale

Note: The use of the word “Images” rather than “composite object instances” is historical to allow backward compatibility with previous versions of the standard. It should not be taken to mean that composite object instances of other than image type are not included at the level indicated by the value IMAGE.

C.6.2.1 Study Root Query/Retrieve Information Model

C.6.2.1.1 E/R Model

The Study Root Query/Retrieve Information Model may be represented by the entity relationship diagram shown in Figure C.6-2.

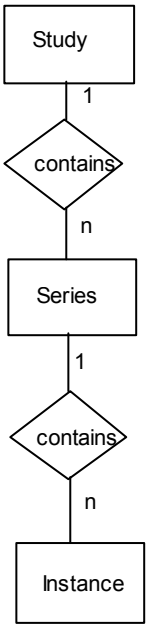

Figure C.6-2
STUDY ROOT QUERY/RETRIEVE INFORMATION MODEL E/R DIAGRAM

C.6.2.1.2 Study level

Table C.6-5 defines the keys at the Study Information level of the Study Root Query/Retrieve Information Model.

Notes: 1. A description of the attributes of this Information Model is contained in Section C.3.

2. Although the Patient ID may not be globally unique, the Study Instance UID is globally unique ensuring that no two studies may be mis-identified.

Table C.6-5
STUDY LEVEL KEYS FOR THE STUDY
ROOT QUERY/RETRIEVE INFORMATION MODEL

Description	Tag	Type
Study Date	(0008,0020)	R
Study Time	(0008,0030)	R
Accession Number	(0008,0050)	R
Patient’s Name	(0010,0010)	R

--`,,```,,,,````-`-`,,`,,`,`,,`---

Provided by IHS
No reproduction or networking permitted without license from IHS Not for Resale

Patient ID	(0010,0020)	R
Study ID	(0020,0010)	R
Study Instance UID	(0020,000D)	U
Modalities in Study	(0008,0061)	O
SOP Classes in Study	(0008,0062)	O
Referring Physician's Name	(0008,0090)	O
Study Description	(0008,1030)	O
Procedure Code Sequence	(0008,1032)	O
>Code Value	(0008,0100)	O
>Coding Scheme Designator	(0008,0102)	O
>Coding Scheme Version	(0008,0103)	O
>Code Meaning	(0008,0104)	O
Name of Physician(s) Reading Study	(0008,1060)	O
Admitting Diagnoses Description	(0008,1080)	O
Referenced Study Sequence	(0008,1110)	O
>Referenced SOP Class UID	(0008,1150)	O
>Referenced SOP Instance UID	(0008,1155)	O
Referenced Patient Sequence	(0008,1120)	O
>Referenced SOP Class UID	(0008,1150)	O
>Referenced SOP Instance UID	(0008,1155)	O
Issuer of Patient ID	(0010,0021)	O
Patient's Birth Date	(0010,0030)	O
Patient's Birth Time	(0010,0032)	O
Patient's Sex	(0010,0040)	O
Other Patient Ids	(0010,1000)	O
Other Patient Names	(0010,1001)	O
Patient's Age	(0010,1010)	O
Patient's Size	(0010,1020)	O
Patient's Weight	(0010,1030)	O
Ethnic Group	(0010,2160)	O
Occupation	(0010,2180)	O
Additional Patient History	(0010,21B0)	O
Patient Comments	(0010,4000)	O
Other Study Numbers	(0020,1070)	O
Number of Patient Related Studies	(0020,1200)	O
Number of Patient Related Series	(0020,1202)	O
Number of Patient Related Instances	(0020,1204)	O
Number of Study Related Series	(0020,1206)	O
Number of Study Related Instances	(0020,1208)	O

--`,,```,,,,````-`-`,,`,,`,`,,`---

Provided by IHS
No reproduction or networking permitted without license from IHS
Not for Resale

Interpretation Author	(4008,010C)	O
All other Attributes at Study Level		O

Note: The use of the word “Images” rather than “composite object instances” is historical, and should not be taken to mean that composite object instances of other than image type are not included in the number.

C.6.2.1.3 Series Level

Attributes for the Series Level of the Study Root Query/Retrieve Information Model are the same as the Attributes for the Series Level of the Patient Root Query/Retrieve Information Model described in Section C.6.1.1.4.

C.6.2.1.4 Composite object instance Level

Attributes for the Composite object instance Level of the Study Root Query/Retrieve Information Model are the same as the Attributes for the Composite object instance Level of the Patient Root Query/Retrieve Information Model described in Section C.6.1.1.5.

C.6.2.1.5 Scope of The GET and MOVE Commands and Sub-Operations

A C-MOVE or C-GET request may be performed to any level of the Query/Retrieve Model. However, the transfer of Stored SOP Instances shall always take place at the Composite object instance level. A C-MOVE or C-GET where the Query/Retrieve level is the:

- STUDY level indicates that all composite object instances related to a Study shall be transferred
- SERIES level indicates that all composite object instances related to a Series shall be transferred
- IMAGE level indicates that selected individual composite object instances shall be transferred

Note: In the Baseline behavior, more than one entity may be retrieved if the Query/Retrieve Level is IMAGE, SERIES or STUDY, using List of UID matching,

C.6.2.2 Conformance Requirements

An implementation may conform to one of the SOP Classes of the Study Hierarchy SOP Class Group as an SCU, SCP or both. The Conformance Statement shall be in the format defined in PS 3.2.

C.6.2.2.1 SCU Conformance

C.6.2.2.1.1 C-FIND SCU Conformance

An implementation which conforms to one of the SOP Classes of the Study Root SOP Class Group shall support queries against the Query/Retrieve Information Model described in Section C.6.2.1 using the C-FIND SCU behavior described in Section C.4.1.2.

An implementation which conforms to one of the SOP Classes of the Study Root SOP Class Group as an SCU shall state in its Conformance Statement whether it supports Optional Keys. If it supports Optional Keys, then it shall list the Optional Keys which it supports.

An implementation which conforms to one of the SOP Classes of the Study Root SOP Class Group as an SCU shall be capable of generating queries using the Hierarchical Search. It shall not generate queries using Relational-queries unless the Relational-queries option has been successfully negotiated.

Provided by IHS
No reproduction or networking permitted without license from IHS Not for Resale

An implementation which conforms to one of the SOP Classes of the Study Root SOP Class Group as an SCU shall state in its Conformance Statement whether it may generate Relational-queries. If it supports Relational Search, then it shall also support extended negotiation.

An implementation which conforms to one of the SOP Classes of the Study Root SOP Class Group as an SCU shall state in its Conformance Statement how it makes use of Specific Character Set (0008,0005) when encoding queries and interpreting responses.

C.6.2.2.1.2 C-MOVE SCU Conformance

An implementation which conforms to one of the SOP Classes of the Study Root SOP Class Group as an SCU shall support transfers against the Query/Retrieve Information Model described in Section C.6.2.1 using the C-MOVE SCU Behavior described in Section C.4.2.2.

C.6.2.2.1.3 C-GET SCU Conformance

An implementation which conforms to one of the SOP Classes of the Study Root SOP Class Group as an SCU shall support retrievals against the Query/Retrieve Information Model described in Section C.6.2.1 using the C-GET SCU Behavior described in Section C.4.3.2.

An implementation which conforms to one of the SOP Classes of the Study Root SOP Class Group as an SCU, which generates retrievals using the C-GET operation shall state in its Conformance Statement the Storage Service Class SOP Classes under which it shall support the C-STORE sub-operations generated by the C-GET.

C.6.2.2.2 SCP Conformance

C.6.2.2.2.1 C-FIND SCP Conformance

An implementation which conforms to one of the SOP Classes of the Study Root SOP Class Group shall support queries against the Query/Retrieve Information Model described in Section C.6.2.1 using the C-FIND SCP behavior described in Section C.4.1.3.

An implementation which conforms to one of the SOP Classes of the Study Root SOP Class Group as an SCP shall state in its Conformance Statement whether it supports Optional Keys. If it supports Optional Keys, then it shall list the Optional Keys which it supports.

An implementation which conforms to one of the SOP Classes of the Study Root SOP Class Group as an SCP shall state in its Conformance Statement whether it supports Relational Search. If it supports Relational Search, then it shall also support extended negotiation.

An implementation which conforms to one of the SOP Classes of the Study Root SOP Class Group as an SCP shall state in its Conformance Statement whether it supports case-insensitive matching for PN VR attributes and list attributes for which this applies.

An implementation which conforms to one of the SOP Classes of the Study Root SOP Class Group as an SCP shall state in its Conformance Statement how it makes use of Specific Character Set (0008,0005) when interpreting queries, performing matching and encoding responses.

C.6.2.2.2.2 C-MOVE SCP Conformance

An implementation which conforms to one of the SOP Classes of the Study Root SOP Class Group as an SCP shall support transfers against the Query/Retrieve Information Model described in Section C.6.2.1 using the C-MOVE SCP Behavior described in Section C.4.2.3.

An implementation which conforms to one of the SOP Classes of the Study Root SOP Class Group as an SCP, which generates transfers using the C-MOVE operation shall state in its Conformance Statement the Storage Service Class SOP Classes under which it shall support the C-STORE sub-operations generated by the C-MOVE.

Provided by IHS
No reproduction or networking permitted without license from IHS
Not for Resale

C.6.2.2.2.3 C-GET SCP Conformance

An implementation which conforms to one of the SOP Classes of the Study Root SOP Class Group as an SCP shall support retrievals against the Query/Retrieve Information Model described in Section C.6.2.1 using the C-GET SCP Behavior described in Section C.4.3.3.

An implementation which conforms to one of the SOP Classes of the Study Root SOP Class Group as an SCP, which generates retrievals using the C-GET operation shall state in its Conformance Statement the Storage Service Class SOP Classes under which it shall support the C-STORE sub-operations generated by the C-GET.

C.6.2.3 SOP Classes

The SOP Classes in the Study Root SOP Class Group of the Query/Retrieve Service Class identify the Study Root Query/Retrieve Information Model, and the DIMSE-C operations supported. The Standard SOP Classes are listed in Table C.6.2.3-1.

Table C.6.2.3-1
SOP Classes for Study Root Query/Retrieve

SOP Class Name	SOP Class UID
Study Root Query/Retrieve Information Model – FIND	1.2.840.10008.5.1.4.1.2.2.1
Study Root Query/Retrieve Information Model – MOVE	1.2.840.10008.5.1.4.1.2.2.2
Study Root Query/Retrieve Information Model – GET	1.2.840.10008.5.1.4.1.2.2.3

C.6.3 Patient/Study Only SOP Class Group

Retired. See PS 3.4 2004.

Provided by IHS
No reproduction or networking permitted without license from IHS
Not for Resale

Annex D STUDY CONTENT NOTIFICATION SERVICE CLASS (Normative)

Retired. See PS 3.4 2004.

Provided by IHS
No reproduction or networking permitted without license from IHS
Not for Resale

Annex E PATIENT MANAGEMENT SERVICE CLASS (Normative)

Retired. See PS 3.4 2004.

Provided by IHS
No reproduction or networking permitted without license from IHS
Not for Resale

Annex F PROCEDURE STEP SOP CLASSES (Normative)

F.1 OVERVIEW

This Annex defines the Procedure Step SOP Classes.

Note: This Annex formerly defined a Study Management Service Class that has been retired. See PS 3.4 2004.

F.1.1 Scope

Retired. See PS 3.4-2004.

F.1.2 Study Management Functional Model

Retired. See PS 3.4-2004.

F.1.3 Study Management Information Model

Retired. See PS 3.4-2004.

F.1.4 Study Management States

Retired. See PS 3.4-2004.

F.1.5 Modality Performed Procedure Step Management States

The state information related to the Modality Performed Procedure Step is specified by the Modality Performed Procedure Step IOD in the Attribute Performed Procedure Step Status (0040,0252).

The Performed Procedure Step Object represents only the “performed” segment of the real-world procedure step and not the “scheduled” segment. The number of events is therefore limited; all events are initiated by the modality. The state “DISCONTINUED” means canceled or unsuccessfully terminated, which may happen when the performance of a Procedure Step has been started but cannot be finished by the modality. The modality shall convey this state change to the information system (the SCP), to allow the information system to reschedule or cancel the related Procedure Step. The state “COMPLETED” means that the acquisition of Composite SOP Instances has been successfully completed and the SCU has provided all required attribute values for the Performed Procedure Step.

Table F.1-3 describes the valid Modality Performed Procedure Step states.

Table F.1-3
MODALITY PERFORMED PROCEDURE STEP STATES

State	Description
In Progress	Modality Performed Procedure Step created and execution in progress
Discontinued	Execution of Modality Performed Procedure Step canceled by modality
Completed	Modality Performed Procedure Step completed

--`,,```,,,,````-`-`,,`,,`,`,,`---

Provided by IHS
No reproduction or networking permitted without license from IHS Not for Resale

Table F.1-4 defines the valid state transitions for the Performed Procedure Steps. For each of the above defined states the valid state resulting from the occurrence of events is specified. These state transitions are managed by the Modality Performed Procedure Step SOP Class.

Table F.1-4
MODALITY PERFORMED PROCEDURE STEP STATE TRANSITION DIAGRAM

Events	States		
	In Progress	**Discontinued**	**Completed**
Performed Procedure Step Discontinued	Discontinued		
Performed Procedure Step Completed	Completed		

F.1.6 General Purpose Scheduled Procedure Step Management States

Figure F.1-3 specifies how changes in the status of a General Purpose Scheduled Procedure Step shall be managed.

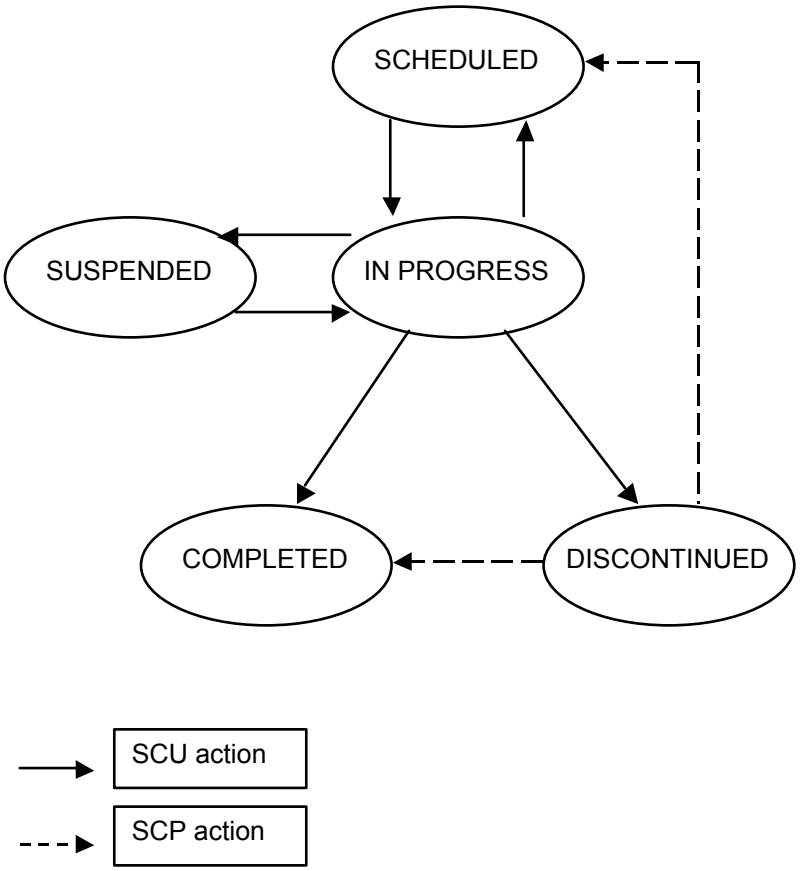

--`,,```,,,,````-`-`,,`,,`,`,,`---

Provided by IHS
No reproduction or networking permitted without license from IHS
Not for Resale

Figure F.1-3: Management of General Purpose Scheduled Procedure Step Status

The SCP will create the General Purpose Scheduled Procedure Step (GP-SPS) with an initial status of SCHEDULED. The availability of the input information is denoted by the Attribute "Input Availability Flag" (0040,4020). The SCU may start working on a GP-SPS which has the status SCHEDULED, regardless of the availability of the input information. As soon as an SCU starts working on the performance of a GP-SPS, a status modification to IN PROGRESS shall be requested by the SCU. If the status modification to IN PROGRESS is acknowledged, the SCU at the same time has an implicit exclusive lock on the GP-SPS, as long as the status is IN PROGRESS. When the status has a value other than IN PROGRESS, there is no implicit exclusive lock on the GP-SPS.

Once a GP-SPS is started and the status is IN PROGRESS (that is, with an implicit exclusive lock) all subsequent attempts by another SCU to set the status will fail. This failure to set the status will indicate that someone else has already set the status of the GP-SPS to IN PROGRESS and will perform tasks related to it. The SCU that has set the status of the GP-SPS to IN PROGRESS and wants to relinquish control of it before its completion may request a status modification to SUSPENDED or SCHEDULED.

There is no limit on the number of transactions in either direction between IN PROGRESS and SCHEDULED or IN PROGRESS and SUSPENDED.

Once an IN PROGRESS GP-SPS is completed, the SCU shall request a modification of its status to COMPLETED.

The SCU may discontinue an IN PROGRESS GP-SPS at any time, provided the GP-SPS is not completed. To do so, the SCU requests a modification of the GP-SPS status to DISCONTINUED.

The SCP is responsible for defining how long a GP-SPS persists (is visible in worklist) once its status is COMPLETED or DISCONTINUED.

The state information related to the General Purpose Scheduled Procedure Step is specified by the General Purpose Scheduled Procedure Step IOD in the Attribute "General Purpose Scheduled Procedure Step Status" (0040,4001).

Table F.1-5 describes the valid General Purpose Scheduled Procedure Step states, and Table F.1-6 the valid state transitions.

Table F.1-5
GENERAL PURPOSE SCHEDULED PROCEDURE STEP STATES

State	Description
Scheduled	General Purpose Scheduled Procedure Step created and scheduled to be performed
In Progress	General Purpose Scheduled Procedure Step created and execution in progress. This is the only state that implies an exclusive lock.
Suspended	Execution of the General Purpose Scheduled Procedure Step temporarily suspended.
Discontinued	Execution of General Purpose Scheduled Procedure Step canceled by SCU
Completed	General Purpose Scheduled Procedure Step completed by SCU

Provided by IHS
No reproduction or networking permitted without license from IHS
Not for Resale

Table F.1-6
GENERAL PURPOSE SCHEDULED PROCEDURE STEP STATE TRANSITION DIAGRAM

	States				
Events	**Scheduled**	**In Progress**	**Suspended**	**Completed**	**Discontinued**
General Purpose Scheduled Procedure Step Started	In Progress (SCU)				
General Purpose Scheduled Procedure Step Completed		Completed (SCU)			
General Purpose Scheduled Procedure Step Suspended		Suspended (SCU)			
General Purpose Scheduled Procedure Step Resumed			In Progress (SCU)		
General Purpose Scheduled Procedure Step Discontinued		Discontinued (SCU)			
General Purpose Scheduled Procedure Step Completed					Completed (SCP)
General Purpose Scheduled Procedure Step Re-Scheduled		Scheduled (SCU)			Scheduled (SCP)

F.1.7 General Purpose Performed Procedure Step Management States

The General Purpose Performed Procedure Step Object represents only the “performed” segment of the real-world procedure step and not the “scheduled” segment.

As soon as a SCU starts working on the performance of a General Purpose Performed Procedure Step (GP-PPS), the GP-PPS object will be created and the initial status shall be set to IN PROGRESS.

Once an IN PROGRESS GP-PPS is completed, its status shall be set to COMPLETED.

The SCU may discontinue a GP-PPS at any time, provided the GP-PPS is not completed. To do so, the GP-PPS status shall be set to DISCONTINUED.

The state “DISCONTINUED” means canceled or unsuccessfully terminated which may happen when the performance of a General Purpose Procedure Step has been started but cannot be finished by the SCU. The state “COMPLETED” means that the step has been successfully completed and the SCU has provided all required attribute values for the General Purpose Performed Procedure Step.

Provided by IHS
No reproduction or networking permitted without license from IHS
Not for Resale

The SCP is responsible for determining how long a GP-PPS persists once its status is COMPLETED or DISCONTINUED.

The state information related to the General Purpose Performed Procedure Step is specified by the General Purpose Performed Procedure Step IOD in the Attribute "General Purpose Performed Procedure Step Status" (0040,4002).

Table F.1-7 describes the valid General Purpose Performed Procedure Step states.

Table F.1-7
GENERAL PURPOSE PERFORMED PROCEDURE STEP STATES

State	Description
In Progress	Performed Procedure Step created and execution in progress
Discontinued	Execution of Performed Procedure Step canceled by SCU
Completed	Performed Procedure Step completed

Table F.1-8 defines the valid state transitions for the General Purpose Performed Procedure Steps. For each of the above-defined states the valid state resulting from the occurrence of events is specified. These state transitions are managed by the General Purpose Performed Procedure Step SOP Class.

Table F.1-8
GENERAL PURPOSE PERFORMED PROCEDURE STEP STATE TRANSITION DIAGRAM

	States		
Events	**In Progress**	**Discontinued**	**Completed**
Performed Procedure Step Discontinued	Discontinued (SCU)		
Performed Procedure Step Completed	Completed (SCU)		

F.2 CONFORMANCE OVERVIEW

The application-level services addressed by this Service Class Definition are specified via the following distinct SOP Classes:

a. Modality Performed Procedure Step SOP Class
b. Modality Performed Procedure Step Notification SOP Class
c. Modality Performed Procedure Step Retrieve SOP Class
d. General Purpose Scheduled Procedure Step SOP Class
e. General Purpose Performed Procedure Step SOP Class

Each SOP Class operates on a subset of the Modality Performed Procedure Step IOD, General Purpose Scheduled Procedure Step IOD, or General Purpose Performed Procedure Step IOD and specifies the Attributes, operations, notifications, and behavior applicable to the SOP Class. Conformance of Application Entities shall be defined by selecting one or more of the Study and Study Component Management SOP and Meta SOP Classes. For each SOP Class conformance requirements shall be specified in terms of the Service Class Provider (SCP) and the Service Class User (SCU).

Provided by IHS
No reproduction or networking permitted without license from IHS
Not for Resale

F.2.1 Association Negotiation

Association establishment is the first phase of any instance of communication between peer DICOM AEs. The Association negotiation procedure specified in PS 3.7 shall be used to negotiate the supported SOP Classes.

Support for the SCP/SCU role selection negotiation is mandatory. The SOP Class Extended Negotiation shall not be supported.

Note: Event notification is a process that logically extends across multiple Associations. SCP implementations should support a local table of SCUs to which event notifications are to be sent.

F.3 DETACHED STUDY MANAGEMENT SOP CLASS

Retired. See PS 3.4-2004.

F.4 STUDY COMPONENT MANAGEMENT SOP CLASS

Retired. See PS 3.4-2004.

F.5 STUDY MANAGEMENT META SOP CLASS

Retired. See PS 3.4-2004.

F.6 SPECIALIZED SOP CLASS CONFORMANCE

Retired. See PS 3.4-2004.

F.7 MODALITY PERFORMED PROCEDURE STEP SOP CLASS

F.7.1 DIMSE Service Group

The DIMSE Services shown in Table F.7.1-1 are applicable to the Modality Performed Procedure Step IOD under the Modality Performed Procedure Step SOP Class.

Table F.7.1-1
DIMSE SERVICE GROUP

DIMSE Service Element	Usage SCU/SCP
N-CREATE	M/M
N-SET	M/M

The DIMSE Services and Protocols are specified in PS 3.7

F.7.2 Operations

The Application Entity which claims conformance to this SOP Class as an SCU shall be permitted to invoke the following operations and the Application Entity which claims conformance as an SCP shall be capable of providing the following operations.

F.7.2.1 CREATE Modality Performed Procedure Step SOP Instance

This operation allows an SCU to create an instance of the Modality Performed Procedure Step SOP Class and provide information about a specific real-world Performed Procedure Step that is under control of the SCU. This operation shall be invoked through the DIMSE N-CREATE Service.

Note : The modality should inform the Information System as soon as possible that the performance of the Procedure Step has been started by sending the N-CREATE Service Request. This allows an SCP of the Modality Worklist SOP Class (if supported) to update the Modality

Provided by IHS
No reproduction or networking permitted without license from IHS
Not for Resale

Worklist. Some of the attribute values are already known at the beginning of the Procedure Step, they are required to be sent in the N-CREATE command. Other mandatory attributes are known only at the end of the Performed Procedure Step, they are assigned a value in the N-SET command.

The same SOP Instance UID is shared by all three Modality Performed Procedure Step SOP Classes. This means that the SOP Instance created and set using the services of the Modality Performed Procedure Step SOP Class can be retrieved using its SOP Instance UID within the service of the Modality Performed Procedure Step Retrieve SOP Class. Changes in its state can be notified by using its SOP Instance UID within the service of the Modality Performed Procedure Step Notification SOP Class. The SOP Class UID specified in the DIMSE N-CREATE and N-SET request primitives shall be the UID of the Modality Performed Procedure Step SOP Class.

The Modality Performed Procedure Step SOP Instance UID shall not be used to identify a SOP Instance of the Study Component Service Class.

F.7.2.1.1 Modality Performed Procedure Step Subset Specification

The Application Entity which claims conformance to this SOP Class as an SCU must provide all Required Attributes as specified in Table F.7.2-1. Optional Attributes maintained by the SCP may be provided as well. The Application Entity which claims conformance as an SCP to this SOP Class shall support the subset of the Modality Performed Procedure Step Attributes specified in Table F.7.2-1.

Table F.7.2-1
MODALITY PERFORMED PROCEDURE STEP SOP CLASS N-CREATE, N-SET AND FINAL STATE ATTRIBUTES

Attribute Name	Tag	Req. Type N-CREATE (SCU/SCP)	Req. Type N-SET (SCU/SCP)	Requirement Type Final State (See Note 1)
Specific Character Set	(0008,0005)	1C/1C (Required if an extended or replacement character set is used)	Not allowed	
Performed Procedure Step Relationship				
Scheduled Step Attribute Sequence	(0040,0270)	1/1	Not allowed	
>Study Instance UID	(0020,000D)	1/1	Not allowed	
>Referenced Study Sequence	(0008,1110)	2/2	Not allowed	
>>Referenced SOP Class UID	(0008,1150)	1C/1 (Required if Sequence Item is present)	Not allowed	
>>Referenced SOP Instance UID	(0008,1155)	1C/1 (Required if Sequence Item is present)	Not allowed	
>Accession Number	(0008,0050)	2/2	Not allowed	

Provided by IHS
No reproduction or networking permitted without license from IHS
Not for Resale

>Placer Order Number/Imaging Service Request	(0040,2016)	3/3	Not allowed	
>Filler Order Number/Imaging Service Request	(0040,2017)	3/3	Not allowed	
>Requested Procedure ID	(0040,1001)	2/2	Not allowed	
>Requested Procedure Description	(0032,1060)	2/2	Not allowed	
>Scheduled Procedure Step ID	(0040,0009)	2/2	Not allowed	
>Scheduled Procedure Step Description	(0040,0007)	2/2	Not allowed	
>Scheduled Protocol Code Sequence	(0040,0008)	2/2	Not allowed	
>>Code Value	(0008,0100)	1C/1 (Required if Sequence Item is present)	Not allowed	
>>Coding Scheme designator	(0008,0102)	1C/1 (Required if Sequence Item is present)	Not allowed	
>>Coding Scheme Version	(0008,0103)	3/3	Not allowed	
>>Code Meaning	(0008,0104)	3/3	Not allowed	
>>All other Attributes from Scheduled Protocol Code Sequence		3/3	Not allowed	
Patient's Name	(0010,0010)	2/2	Not allowed	
Patient ID	(0010,0020)	2/2	Not allowed	
Issuer of Patient ID	(0010,0021)	3/3	Not allowed	
Patient's Birth Date	(0010,0030)	2/2	Not allowed	
Patient's Sex	(0010,0040)	2/2	Not allowed	
Referenced Patient Sequence	(0008,1120)	2/2	Not allowed	
>Referenced SOP Class UID	(0008,1150)	1C/1 (Required if Sequence Item is present)	Not allowed	
>Referenced Instance UID	(0008,1155)	1C/1 (Required if Sequence Item is present)	Not allowed	
Admission ID	(0038,0010)	3/3	Not Allowed	

Provided by IHS
No reproduction or networking permitted without license from IHS
Not for Resale

Issuer of Admission ID	(0038,0011)	3/3	Not Allowed	
Performed Procedure Step Information				
Performed Procedure Step ID	(0040,0253)	1/1	Not allowed	
Performed Station AE Title	(0040,0241)	1/1	Not allowed	
Performed Station Name	(0040,0242)	2/2	Not allowed	
Performed Location	(0040,0243)	2/2	Not allowed	
Performed Procedure Step Start Date	(0040,0244)	1/1	Not allowed	
Performed Procedure Step Start Time	(0040,0245)	1/1	Not allowed	
Performed Procedure Step Status	(0040,0252)	1/1	3/1	
Performed Procedure Step Description	(0040,0254)	2/2	3/2	
Performed Procedure Type Description	(0040,0255)	2/2	3/2	
Procedure Code Sequence	(0008,1032)	2/2	3/2	
>Code Value	(0008,0100)	1C/1 (Required if Sequence Item is present)	1C/1 (Required if Sequence Item is present)	
>Coding Scheme Designator	(0008,0102)	1C/1 (Required if Sequence Item is present)	1C/1 (Required if Sequence Item is present)	
>Coding Scheme Version	(0008,0103)	3/3	3/3	
>Code Meaning	(0008,0104)	3/3	3/3	
Performed Procedure Step End Date	(0040,0250)	2/2	3/1	1
Performed Procedure Step End Time	(0040,0251)	2/2	3/1	1
Comments on the Performed Procedure Step	(0040,0280)	3/3	3/3	
Performed Procedure Step Discontinuation Reason Code Sequence	(0040,0281)	3/3	3/3	
>Code Value	(0008,0100)	1C/1 (Required if Sequence Item is present)	1C/1 (Required if Sequence Item is present)	

--`,,```,,,,````-`-`,,`,,`,`,,`---

Provided by IHS
No reproduction or networking permitted without license from IHS
Not for Resale

>Coding Scheme Designator	(0008,0102)	1C/1 (Required if Sequence Item is present)	1C/1 (Required if Sequence Item is present)	
>Coding Scheme Version	(0008,0103)	3/3	3/3	
>Code Meaning	(0008,0104)	3/3	3/3	
Image Acquisition Results				
Modality	(0008,0060)	1/1	Not allowed	
Study ID	(0020,0010)	2/2	Not allowed	
Performed Protocol Code Sequence	(0040,0260)	2/2	3/2	
>Code Value	(0008,0100)	1C/1 (Required if Sequence Item is present)	1C/1 (Required if Sequence Item is present)	
>Coding Scheme Designator	(0008,0102)	1C/1 (Required if Sequence Item is present)	1C/1 (Required if Sequence Item is present)	
>Coding Scheme Version	(0008,0103)	3/3	3/3	
>Code Meaning	(0008,0104)	3/3	3/3	
>All other Attributes from Performed Protocol Code Sequence		3/3	Not allowed	
Performed Series Sequence	(0040,0340)	2/2	3/1	1 (See note 2)
>Performing Physician's Name	(0008,1050)	2C/2 (Required if Sequence Item is present)	2C/2 (Required if Sequence Item is present)	2
>Protocol Name	(0018,1030)	1C/1 (Required if Sequence Item is present)	1C/1 (Required if Sequence Item is present)	1
>Operator's Name	(0008,1070)	2C/2 (Required if Sequence Item is present)	2C/2 (Required if Sequence Item is present)	2
>Series Instance UID	(0020,000E)	1C/1 (Required if Sequence Item is present)	1C/1 (Required if Sequence Item is present)	1
>Series Description	(0008,103E)	2C/2 (Required if	2C/2 (Required if	2

Provided by IHS
No reproduction or networking permitted without license from IHS
Not for Resale

		Sequence Item is present)	Sequence Item is present)	
>Retrieve AE Title	(0008,0054)	2C/2 (Required if Sequence Item is present)	2C/2 (Required if Sequence Item is present)	2
>Referenced Image Sequence	(0008,1140)	2C/2 (Required if Sequence Item is present)	2C/2 (Required if Sequence Item is present)	See F.7.2.2.2.
>>Referenced SOP Class UID	(0008,1150)	1C/1 (Required if Sequence Item is present)	1C/1 (Required if Sequence Item is present)	
>>Referenced SOP Instance UID	(0008,1155)	1C/1 (Required if Sequence Item is present)	1C/1 (Required if Sequence Item is present)	
>Referenced Non-Image Composite SOP Instance Sequence	(0040,0220)	2C/2 (Required if Sequence Item is present)	2C/2 (Required if Sequence Item is present)	See F.7.2.2.2.
>>Referenced SOP Class UID	(0008,1150)	1C/1 (Required if Sequence Item is present)	1C/1 (Required if Sequence Item is present)	
>>Referenced SOP Instance UID	(0008,1155)	1C/1 (Required if Sequence Item is present)	1C/1 (Required if Sequence Item is present)	
>All other attributes from Performed Series Sequence		3/3	3/3	
All other attributes from Radiation Dose Module and Billing and Material Code Module		3/3	3/3	

Notes: 1. The requirement for the final state is that which applies at the time that the Performed Procedure Step Status (0040,0252) is N-SET to a value of COMPLETED or DISCONTINUED, as described in F.7.2.2.2. It is only described if it is different from the SCP requirement for the N-CREATE.

2. The Performed Series Sequence (0040,0340) may not be empty (zero length) at the time that the Performed Procedure Step Status (0040,0252) is N-SET to a value of COMPLETED or DISCONTINUED. In other words a Series must exist for every Performed Procedure Step, though it may contain no Images or Non-Image Composite objects, if none were created, as described in F.7.2.2.2.

3. Attributes (0040,1006) Placer Order Number/Procedure and (0040,1007) Filler Order Number/Procedure were previously defined in DICOM. They are now retired (See PS3.3 1998).

--`,,```,,,,````-`-`,,`,,`,`,,`---

Provided by IHS
No reproduction or networking permitted without license from IHS
Not for Resale

4. Attributes (0040,2006) and (0040,2007) were previously defined in DICOM. They are now retired (See PS3.3 1998).

5. Only attributes that are specified in a SOP Instance at N-CREATE may later be updated through the N-SET. If an SCU wishes to use the PPS Discontinuation Reason Code Sequence (0040,0281), it must create that attribute (zero-length) during MPPS N-CREATE.

F.7.2.1.2 Service Class User

The SCU shall specify in the N-CREATE request primitive the Class and Instance UIDs of the Modality Performed Procedure Step SOP Instance which is created and for which Attribute Values are to be provided.

Note: This requirement facilitates the inclusion of relevant Attributes in the Composite SOP Instances generated during the Performed Procedure Step.

The SCU shall provide Attribute values for the Modality Performed Procedure Step SOP Class Attributes as specified in Table F.7.2-1. Additionally, values may be provided for optional Modality Performed Procedure Step IOD Attributes that are supported by the SCP. The encoding rules for Modality Performed Procedure Step Attributes are specified in the N-CREATE request primitive specification in PS 3.7.

The SCU shall be capable of providing all required Attribute values to the SCP in the N-CREATE request primitive. The SCU may provide Attribute values for optional Attributes which are not maintained by the SCP. In such case the SCU shall function properly regardless of whether the SCP accepts values for those Attributes or not.

All Attributes shall be created before they can be set. Sequence Attributes shall be created before they can be filled. Sequence Item Attributes shall not be created at zero length.

Note: Not all the attributes that can be created can be set afterwards (see Table F.7.2-1).

The SCU shall only send the N-CREATE request primitive with the value for the Attribute “Performed Procedure Step Status” (0040,0252) set to “IN PROGRESS”.

Note: It is assumed but not required that the SCU (the modality) received the Study Instance UID within the scope of the Basic Worklist Management SOP Class.

F.7.2.1.3 Service Class Provider

The N-CREATE operation allows the SCU to provide to the SCP selected Attribute values for a specific Modality Performed Procedure Step SOP Instance. This operation shall be invoked through the use of the DIMSE N-CREATE Service used in conjunction with the appropriate Modality Performed Procedure Step SOP Instance.

The SCP shall return, via the N-CREATE response primitive, the N-CREATE Response Status Code applicable to the associated request.

The SCP shall accept N-CREATE request primitives only if the value of the attribute “Performed Procedure Step Status” (0040,0252) is “IN PROGRESS”. If the Performed Procedure Step Status attribute has another value, the SCP shall set the failure status code “Invalid attribute value” (Code: 0106H) with an Attribute List.

Note: The SCP may update the Referenced Performed Procedure Step Sequence Attributes in the referenced Study Management SOP Instance, if it exists, and the scheduling information on which the Modality Worklist is based.

F.7.2.1.4 Status Codes

There are no specific status codes. See PS 3.7 for response status codes.

Provided by IHS
No reproduction or networking permitted without license from IHS Not for Resale

F.7.2.2 SET Modality Performed Procedure Step Information

This operation allows an SCU to set Attribute Values of an instance of the Modality Performed Procedure Step SOP Class and provide information about a specific real-world Modality Performed Procedure Step that is under control of the SCU. This operation shall be invoked through the DIMSE N-SET Service.

F.7.2.2.1 Modality Performed Procedure Step IOD Subset Specification

The Application Entity which claims conformance to this SOP Class as an SCU may choose to modify a subset of the Attributes maintained by the SCP. The Application Entity which claims conformance as an SCP to this SOP Class shall support the subset of the Modality Performed Procedure Step Attributes specified in Table F.7.2-1.

The character set used for Attribute Values updated using the N-SET shall be the same as that specified by the N-CREATE Request Primitive.

F.7.2.2.2 Service Class User

The SCU shall specify in the N-SET request primitive the UID of the Modality Performed Procedure Step SOP Instance for which it wants to set Attribute Values.

The SCU shall be permitted to set Attribute values for any Modality Performed Procedure Step SOP Class Attribute specified in Table F.7.2-1. The SCU shall specify the list of Modality Performed Procedure Step SOP Class Attributes for which it wants to set the Attribute Values. The SCU shall provide, with one or more N-SET request primitives, the attribute values specified in Table F.7.2-1. The encoding rules for Modality Performed Procedure Step Attributes are specified in the N-SET request primitive specification in PS 3.7. The SCU shall only set Attribute Values which are already created with an N-CREATE request.

The SCU shall not send N-SET request primitives for a Modality Performed Procedure Step SOP Instance after a N-SET request primitive with a value for the attribute “Performed Procedure Step Status” (0040,0252) is “COMPLETED” or “DISCONTINUED” has been sent.

If Sequences are included in a N-SET command, all Items of a Sequence are to be included in the command and not only the Items to be updated.

Once the Modality Performed Procedure Step Status (0040,0252) has been set to “COMPLETED” or “DISCONTINUED” the SCU shall no longer modify the Modality Performed Procedure Step SOP Instance, and shall not create new Composite SOP Instances as part of the same Modality Performed Procedure Step SOP Instance.

Note: A Modality that wishes to continue or resume creating Composite SOP Instances may create a new Modality Performed Procedure Step.

Before or when Modality Performed Procedure Step Status (0040,0252) is set to “COMPLETED” or “DISCONTINUED” the SCU shall have created or set all the Attributes according to the requirements in the Final State column of Table F.7.2-1.

Before or when Modality Performed Procedure Step Status (0040,0252) is set to “COMPLETED” or “DISCONTINUED” the SCU shall have sent to the SCP a list of all Image SOP Instances and all Non-Image Composite SOP Instances created during the Procedure Step in Referenced Image Sequence (0008,1140) and Referenced Non-Image Composite SOP Instance Sequence (0040,0220) respectively.

Notes: 1. The intent is that a completed or discontinued Modality Performed Procedure Step entity will contain a complete list of all the Images and Non-Image Composite SOP Instances that were created.

2. The distinction between the list of images and non-images is present for historic reasons only, and has no semantic significance.

Provided by IHS
No reproduction or networking permitted without license from IHS
Not for Resale

The Modality Performed Procedure Step Status (0040,0252) shall not be set to “COMPLETED” or “DISCONTINUED” if the list contains neither Image references nor Non-Image Composite SOP Instance references, unless no such Instances were created.

F.7.2.2.3 Service Class Provider

The N-SET operation allows the SCU to request that the SCP update selected Attribute values for a specific Modality Performed Procedure Step SOP Instance. This operation shall be invoked through the use of the DIMSE N-SET Service used in conjunction with the appropriate Modality Performed Procedure Step SOP Instance.

The SCP shall return, via the N-SET response primitive, the N-SET Response Status Code applicable to the associated request. Contingent on the N-SET Response Status, the SCP shall update the Referenced Performed Procedure Step Attributes.

The SCP shall accept N-SET request primitives only if the value of the already existing attribute “Performed Procedure Step Status” (0040,0252) is “IN PROGRESS”. If the already existing Performed Procedure Step Status attribute has another value, the SCP shall set the failure status code “Processing failure” (Code: 0110H) with a Specific Error Comment (see Section F.7.2.2.4).

The SCP may itself modify any Attributes of the Modality Performed Procedure Step SOP Instance only after the “Performed Procedure Step Status” (0040,0252) has been set to “COMPLETED” or “DISCONTINUED”.

Notes: 1. Such coercion of Attributes by the SCP may be necessary to correct, for example, patient identification information or incorrectly selected scheduling information. Such an operation is not permitted to the SCU by the requirements described in Table F.7.2-1, which might create a new Modality Performed Procedure Step SOP Instance to achieve the same objective.

2. Under exceptional circumstances, it may be necessary for the SCP to itself set the Performed Procedure Step Status (0040,0252) to COMPLETED or DISCONTINUED, for example if the Modality has failed. When the Modality recovers, subsequent N-SETs may fail.

F.7.2.2.4 Status Codes

The specific error comment which may be returned as a status code in a N-SET-RSP is defined in Table F.7.2-2. See PS 3.7 for additional response status codes.

Table F.7.2-2
N-SET STATUS

Service Status	Further Meaning	Status Code	Error Comment (0000,0902)	Error ID (0000,0903)
Failure	Processing Failure	0110H	Performed Procedure Step Object may no longer be updated	A710

F.7.3 Modality Performed Procedure Step SOP Class UID

The Modality Performed Procedure Step SOP Class shall be uniquely identified by the Modality Performed Procedure Step SOP Class UID which shall have the value “1.2.840.10008.3.1.2.3.3”.

F.7.4 Conformance Requirements

Implementations providing conformance to the Modality Performed Procedure Step SOP Class shall be conformant as described in the following sections and shall include within their Conformance Statement information as described below.

An implementation may conform to this SOP Class as an SCU or as an SCP. The Conformance Statement shall be in the format defined in Annex A of PS 3.2.

--`,,```,,,,````-`-`,,`,,`,`,,`---

Provided by IHS
No reproduction or networking permitted without license from IHS Not for Resale

F.7.4.1 SCU Conformance

An implementation which is conformant to this SOP Class as an SCU shall meet conformance requirements for the operations which it invokes.

F.7.4.1.1 Operations

Any Attributes for which Attribute Values may be provided (using the N-CREATE Service) by the SCU shall be enumerated in the SCU Operations Statement. The SCU Operations Statement shall be formatted as defined in Annex A of PS 3.2.

Any Attributes for which Attribute Values may be provided (using the N-SET Service) by the SCU shall be enumerated in the SCU Operations Statement. The SCU Operations Statement shall be formatted as defined in Annex A of PS 3.2.

An implementation which conforms to this SOP Class as an SCU shall specify under which conditions during the performance of the real-world Performed Procedure Step it will create the SOP Class Instance and under which conditions it will set the status value to COMPLETED and DISCONTINUED.

F.7.4.2 SCP Conformance

An implementation which is conformant to this SOP Class as an SCP shall meet conformance requirements for the operations which it performs.

F.7.4.2.1 Operations

Any Attributes for which Attribute Values may be provided (using the N-CREATE Service) by the SCU shall be enumerated in the SCP Operations Statement. The SCP Operations Statement shall be formatted as defined in Annex A of PS 3.2.

Any Attributes for which Attribute Values may be updated (using the N-SET Service) by the SCU shall be enumerated in the SCP Operations Statement. The SCP Operations Statement shall be formatted as defined in Annex A of PS 3.2.

The SCP Operations Conformance Statement shall also provide information on the behavior of the SCP (the Information System) at the following occurrences:

- The creation of a new Instance of the Modality Performed Procedure Step SOP Class with the status “IN PROGRESS”. The result of that process on the scheduling information and on the attributes values of the Modality Worklist Management SOP Class shall be specified.
- The update of the Attribute “Performed Procedure Step Status”, i.e. the change from the state “IN PROGRESS” to “DISCONTINUED” or to “COMPLETED”.
- Which Attributes the SCP may coerce after the state has been set to “IN PROGRESS” or “DISCONTINUED” or to “COMPLETED”.
- For how long the Modality Performed Procedure Step SOP Instance will persist on the SCP.

F.8 MODALITY PERFORMED PROCEDURE STEP RETRIEVE SOP CLASS

F.8.1 DIMSE Service Group

The DIMSE Services shown in Table F.8.1-1 are applicable to the Modality Performed Procedure Step IOD under the Modality Performed Procedure Step Retrieve SOP Class.

--`,,```,,,,````-`-`,,`,,`,`,,`---

Provided by IHS
No reproduction or networking permitted without license from IHS
Not for Resale

Table F.8.1-1
DIMSE SERVICE GROUP

DIMSE Service Element	Usage SCU/SCP
N-GET	M/M

The DIMSE Services and Protocols are specified in PS 3.7. If the Modality Performed Procedure Step Object is no longer available the Request Primitive will be answered with a Failure Status message “No Such Object Instance”.

F.8.2 Operations

The Application Entity which claims conformance to this SOP Class as an SCU shall be permitted to invoke the following operations and the Application Entity which claims conformance as an SCP shall be capable of providing the following operations.

F.8.2.1 GET Performed Procedure Step Information

This operation allows an SCU to get information about a specific real-world Performed Procedure Step which is represented as a Modality Performed Procedure Step Retrieve SOP Instance by a Modality Performed Procedure Step Retrieve SCP. The operation is performed on a Modality Performed Procedure Step IOD. This operation shall be invoked through the DIMSE N-GET Service used in conjunction with the appropriate Modality Performed Procedure Step Retrieve SOP Instance.

The same SOP Instance UID is shared by all three Modality Performed Procedure Step SOP Classes. This means that the SOP Instance created and set using the services of the Modality Performed Procedure Step SOP Class can be retrieved using its SOP Instance UID within the service of the Modality Performed Procedure Step Retrieve SOP Class. Changes in its state can be notified by using its SOP Instance UID within the service of the Modality Performed Procedure Step Notification SOP Class. The SOP Class UID specified in the DIMSE N-GET request primitive shall be the UID of the Modality Performed Procedure Step Retrieve SOP Class.

The Modality Performed Procedure Retrieve Step SOP Instance UID shall not be used to identify a SOP Instance of the Study Component Service Class.

Note: An Application Entity may support the SCU role of the Modality Performed Procedure Step Retrieve SOP Class in order to obtain information about Performed Procedure Steps created by other Application Entities.

F.8.2.1.1 Modality Performed Procedure Step Retrieve IOD Subset Specifications

The Application Entity which claims conformance to this SOP Class as an SCU may choose to interpret the Attribute values maintained by the SCP which the SCU receives via the operation of this SOP Class. The Application Entity which claims conformance as an SCP to this Modality Performed Procedure Step Retrieve SOP Class shall support the subset of the Modality Performed Procedure Step Retrieve Attributes specified in Table F.8.2-1.

Table F.8.2-1
MODALITY PERFORMED PROCEDURE STEP RETRIEVE SOP CLASS N-GET ATTRIBUTES

Attribute Name	Tag	Requirement Type (SCU/SCP)
Specific Character Set	(0008,0005)	3/1C (Required if an extended or replacement character set is used)
Performed Procedure Step Relationship		
Scheduled Step Attributes Sequence	(0040,0270)	3/1

--`,,```,,,,````-`-`,,`,,`,`,,`---

Provided by IHS
No reproduction or networking permitted without license from IHS
Not for Resale

>Study Instance UID	(0020,000D)	-/1
>Referenced Study Sequence	(0008,1110)	-/2
>>Referenced SOP Class UID	(0008,1150)	-/1C (Required if Sequence Item is present)
>>Referenced SOP Instance UID	(0008,1155)	-/1C (Required if Sequence Item is present)
>Accession Number	(0008,0050)	-/2
>Placer Order Number/Imaging Service Request	(0040,2016)	-/3
>Filler Order Number/Imaging Service Request	(0040,2017)	-/3
>Requested Procedure Description	(0032,1060)	-/2
>Requested Procedure ID	(0040,1001)	-/2
>Scheduled Procedure Step ID	(0040,0009)	-/2
>Scheduled Procedure Step Description	(0040,0007)	-/2
>Scheduled Protocol Code Sequence	(0040,0008)	-/2
>>Code Value	(0008,0100)	-/1C (Required if Sequence Item is present)
>>Coding Scheme designator	(0008,0102)	-/1C (Required if Sequence Item is present)
>>Coding Scheme Version	(0008,0103)	-/3
>>Code Meaning	(0008,0104)	-/3
>>All other Attributes from Scheduled Protocol Code Sequence		-/3
Patient's Name	(0010,0010)	3/2
Patient ID	(0010,0020)	3/2
Patient's Birth Date	(0010,0032)	3/2
Patient's Sex	(0010,0040)	3/2
Referenced Patient Sequence	(0008,1120)	3/2
>Referenced SOP Class UID	(0008,1150)	-/1C (Required if Sequence Item is present)

Provided by IHS
No reproduction or networking permitted without license from IHS
Not for Resale

>Referenced Instance UID	(0008,1155)	-/1C (Required if Sequence Item is present)
Admission ID	(0038,0010)	3/3
Issuer of Admission ID	(0038,0011)	3/3
Performed Procedure Step Information		
Performed Station AE Title	(0040,0241)	3/1
Performed Station Name	(0040,0242)	3/2
Performed Location	(0040,0243	3/2
Performed Procedure Step Start Date	(0040,0244)	3/1
Performed Procedure Step Start Time	(0040,0245)	3/1
Performed Procedure Step ID	(0040,0253)	3/1
Performed Procedure Step Status	(0040,0252)	3/1
Performed Procedure Step End Date	(0040,0250)	3/2
Performed Procedure Step End Time	(0040,0251)	3/2
Performed Procedure Step Description	(0040,0254)	3/2
Performed Procedure Type Description	(0040,0255)	3/2
Procedure Code Sequence	(0008,1032)	3/2
>Code Value	(0008,0100)	-/1C (Required if Sequence Item is present)
>Coding Scheme Designator	(0008,0102)	-/1C (Required if Sequence Item is present)
>Coding Scheme Version	(0008,0103)	-/3
>Code Meaning	(0008,0104)	-/3
Comments on the Performed Procedure Step	(0040,0280)	3/3
Performed Procedure Step Discontinuation Reason Code Sequence	(0040,0281)	3/2
>Code Value	(0008,0100)	-/1C (Required if Sequence Item is present)
>Coding Scheme Designator	(0008,0102)	-/1C (Required if Sequence Item is present)
>Coding Scheme Version	(0008,0103)	-/3
>Code Meaning	(0008,0104)	-/3

Provided by IHS
No reproduction or networking permitted without license from IHS
Not for Resale

Image Acquisition Results		
Performed Series Sequence	(0040,0340)	3/2
>Performing Physician's Name	(0008,1050)	-/2C (Required if Sequence Item is present)
>Protocol Name	(0018,1030)	-/1C (Required if Sequence Item is present)
>Operator's Name	(0008,1070)	-/2C (Required if Sequence Item is present)
>Series Instance UID	(0020,000E)	-/1C (Required if Sequence Item is present)
>Series Description	(0008,103E)	-/2C (Required if Sequence Item is present)
>Retrieve AE Title	(0008,0054)	-/2C (Required Sequence Item is present)
>Referenced Image Sequence	(0008,1140)	-/2C (Required Sequence Item is present)
>>Referenced SOP Class UID	(0008,1150)	-/1C (Required if Sequence Item is present)
>>Referenced SOP Instance UID	(0008,1155)	-/1C (Required if Sequence Item is present)
>Referenced Non-Image Composite SOP Instance Sequence	(0040,0220)	-/2C (Required if Sequence Item is present)
>>Referenced SOP Class UID	(0008,1150)	-/1C (Required if Sequence Item is present)
>>Referenced SOP Instance UID	(0008,1155)	-/1C (Required if Sequence Item is present)
>All other Attributes from Performed Series Sequence		-/3
Modality	(0008,0060)	3/1
Study ID	(0020,0010)	3/2
Performed Protocol Code Sequence	(0040,0260)	3/2
>Code Value	(0008,0100)	-/1C (Required if Sequence Item is present)
>Coding Scheme Designator	(0008,0102)	-/1C (Required if Sequence Item is present)
>Coding Scheme Version	(0008,0103)	-/3
>Code Meaning	(0008,0104)	-/3
>All other Attributes from		-/3

Provided by IHS
No reproduction or networking permitted without license from IHS
Not for Resale

Performed Protocol Code Sequence		
All other attributes from Radiation Dose Module and Billing and Material Code Module		3/3

Notes: 1. Attributes (0040,1006) Placer Order Number/Procedure and (0040,1007) Filler Order Number/Procedure were previously defined in DICOM. They are now retired (See PS3.3 1998).

2. Attributes (0040,2006) and (0040,2007) were previously defined in DICOM. They are now retired (See PS3.3 1998).

F.8.2.1.2 Service Class User

The SCU uses the N-GET Service Element to request the SCP to get a Modality Performed Procedure Step Retrieve SOP Instance. The SCU shall specify in the N-GET request primitive the UID of the SOP Instance to be retrieved, which is a UID of a Modality Performed Procedure Step SOP Instance. The SCU shall be permitted to request that Attribute Values be returned for any Modality Performed Procedure Step Retrieve SOP Class Attribute specified in Table F.8.2-1. Additionally values may be requested for optional Modality Performed Procedure Step IOD Attributes.

The SCU shall specify the list of Modality Performed Procedure Step Retrieve SOP Class Attributes for which values are to be returned. The encoding rules for Modality Performed Procedure Step Attributes are specified in the N-GET request primitive specification in PS 3.7.

In an N-GET operation, the values of Attributes which are defined within a Sequence of Items shall not be requested by an SCU.

The SCU shall be capable of receiving all requested Attribute Values provided by the SCP in response to the N-GET indication primitive. The SCU may request Attribute Values for optional Attributes which are not maintained by the SCP. In such a case, the SCU shall function properly regardless of whether the SCP returns values for those Attributes or not. This Service Class Specification places no requirements on what the SCU shall do as a result of receiving this information.

Note: In order to accurately interpret the character set used for the Attribute Values returned, it is recommended that the Attribute Value for the Specific Character Set (0008,0005) be requested in the N-GET request primitive.

F.8.2.1.3 Service Class Provider

The N-GET operation allows the SCU to request from the SCP selected Attribute values for a specific Modality Performed Procedure Step SOP Instance via a Modality Performed Procedure Step Retrieve SOP Instance. This operation shall be invoked through the use of the DIMSE N-GET Service used in conjunction with the appropriate Modality Performed Procedure Step Retrieve SOP Instance which equals the Modality Performed Procedure SOP Instance. The SCP shall retrieve the selected Attribute values from the indicated Modality Performed Procedure Step SOP Instance.

The SCP shall return, via the N-GET response primitive, the N-GET Response Status Code applicable to the associated request. A Failure Code shall indicate that the SCP has not retrieved the SOP Instance. Contingent on the N-GET Response Status, the SCP shall return, via the N-GET response primitive, Attribute Values for all requested Attributes maintained by the SCP.

Provided by IHS
No reproduction or networking permitted without license from IHS
Not for Resale

F.8.2.1.4 Status Codes

The status values which are specific for this SOP Class and DIMSE Service are defined in Table F.8.2-2. See PS 3.7 for additional response status codes.

Table F.8.2-2
RESPONSE STATUS

Service Status	Further Meaning	Response Status Code
Warning	Requested optional Attributes are not supported	0001

F.8.3 Modality Performed Procedure Step Retrieve SOP Class UID

The Modality Performed Procedure Step Retrieve SOP Class shall be uniquely identified by the Modality Performed Procedure Step Retrieve SOP Class UID which shall have the value "1.2.840.10008.3.1.2.3.4".

F.8.4 Conformance Requirements

Implementations providing conformance to the Modality Performed Procedure Step Retrieve SOP Class shall be conformant as described in the following sections and shall include within their Conformance Statement information as described below.

An implementation may conform to this SOP Class as an SCU or as an SCP. The Conformance Statement shall be in the format defined in Annex A of PS 3.2.

F.8.4.1 SCU Conformance

An implementation which is conformant to this SOP Class as an SCU shall meet conformance requirements for the operations which it invokes.

F.8.4.1.1 Operations

Any Attributes for which Attribute Values may be requested (using the N-GET Service) by the SCU shall be enumerated in the SCU Operations Statement. The SCU Operations Statement shall be formatted as defined in Annex A of PS 3.2.

F.8.4.2 SCP Conformance

An implementation which is conformant to this SOP Class as an SCP shall meet conformance requirements for the operations which it performs.

F.8.4.2.1 Operations

Any Attributes for which Attribute Values may be requested (using the N-GET Service) by the SCU shall be enumerated in the SCP Operations Statement. The SCP Operations Statement shall be formatted as defined in Annex A of PS 3.2.

F.9 MODALITY PERFORMED PROCEDURE STEP NOTIFICATION SOP CLASS

The Modality Performed Procedure Step Notification SOP Class is intended for those Application Entities requiring notifications of Modality Performed Procedure Step's changes in state.

An Application Entity may choose to take some actions based upon a notification or request for information but is in no way required to do so.

Notes: 1. For example, in one configuration, an IS could be responsible for maintaining data related to performed procedure steps. A PACS reviewing workstation may need to display the images for any study viewed. In order for the PACS to link the images to the study, a PACS may receive a notification whenever a procedure step has been performed. In such a configuration the IS

--`,,```,,,,````-`-`,,`,,`,`,,`---

Provided by IHS
No reproduction or networking permitted without license from IHS Not for Resale

is the SCP and the PACS is the SCU. When the PACS receives this notification, it may link the images and the performed procedure step to the study within its internal database or may choose to take no action.

2. The terms IS and PACS used in the previous example are provided for clarification purposes only. This document does not define nor constrain the purpose or role of any IS, PACS or acquisition Application Entity conforming to this Service Class Specification.

F.9.1 DIMSE service group

Table F.9.1-1 shows the DIMSE-N Services applicable to the Modality Performed Procedure Step IOD under the Modality Performed Procedure Step Notification SOP Class.

The DIMSE-N Services and Protocol are specified in PS 3.7.

Table F.9.1-1
DIMSE-N SERVICE GROUP

DIMSE Service Element	Usage SCU/SCP
N-EVENT-REPORT	M/M

F.9.2 Notifications

The Application Entity which claims conformance as an SCU to this SOP Class shall be permitted to receive the following notification. The Application Entity which claims conformance as an SCP to this SOP Class shall be capable of providing the notifications defined in Table F.9.2-1.

Table F.9.2-1
PERFORMED PROCEDURE STEP NOTIFICATION EVENT INFORMATION

Event Type Name	Event Type ID	Attribute	Tag	Req. Type SCU/SCP
Performed Procedure Step In Progress	1			
Performed Procedure Step Completed	2			
Performed Procedure Step Discontinued	3			
Performed Procedure Step Updated	4			An Update event shall not be used to notify changes in Performed Procedure Step Status (0040,0252).
Performed Procedure Step Deleted	5			

Note: The Notification Event Information contains no Attributes, beyond those defined in PS 3.7. An SCU receiving a Notification and requiring further information may also be an SCU of the Modality Performed Procedure Step Retrieval SOP Class and may use the Affected SOP Instance UID (0000,1000) to perform an N-GET of the Modality Performed Procedure Step SOP Instance.

Provided by IHS
No reproduction or networking permitted without license from IHS
Not for Resale

F.9.2.1 Receive Modality Performed Procedure Step Event Notification

This notification allows an SCU to receive from the SCP an unsolicited notification of a change in a Modality Performed Procedure Step SOP Instance. These notifications shall be invoked by the SCP through the use of the DIMSE N-EVENT-REPORT Service used in conjunction with the related Modality Performed Procedure Step SOP Instance.

The SCU shall return, via the N-EVENT-REPORT response primitive, the N-EVENT-REPORT Response Status Code applicable to the associated request. The SCU shall accept all Attributes included in any notification. This Service Class Specification places no requirements on what the SCU shall do as a result of receiving this information.

The same SOP Instance UID is shared by all three Modality Performed Procedure Step SOP Classes. This means that the SOP Instance created and set using the services of the Modality Performed Procedure Step SOP Class can be retrieved using its SOP Instance UID within the service of the Modality Performed Procedure Step Retrieve SOP Class. Changes in its state can be notified by using its SOP Instance UID within the request primitive of the Modality Performed Procedure Step Notification SOP Class.

The Modality Performed Procedure Step Notification SOP Instance UID shall not be used to identify a SOP Instance of the Study Component Service Class.

F.9.2.2 Provide Modality Performed Procedure Step Event Notification

These notifications allow an SCU to receive from the SCP an unsolicited notification of a change in the state of a real-world performed procedure step. This notification shall be invoked by the SCP through the use of the DIMSE N-EVENT-REPORT Service used in conjunction with the related Modality Performed Procedure Step SOP Instance.

The SCP shall specify in the N-EVENT-REPORT request primitive the UID of the Modality Performed Procedure Step SOP Instance with which the event is associated and the Event Type ID. The Affected SOP Class UID specified in the DIMSE N-EVENT-REPORT request primitive shall be the UID of the Modality Performed Procedure Step Notification SOP Class.

Note: The encoding of Notification Event Information is defined in PS 3.7.

F.9.2.3 Status Codes

There are no specific status codes. See PS 3.7 for response status codes.

F.9.3 Modality Performed Procedure Step Notification SOP Class UID

The Modality Performed Procedure Step Notification SOP Class shall be uniquely identified by the Modality Performed Procedure Step Notification SOP Class UID which shall have the value ”1.2.840.10008.3.1.2.3.5”.

F.9.4 Conformance Requirements

Implementations providing Standard SOP Class Conformance to the Modality Performed Procedure Step Notification SOP Class shall be conformant as described in the following sections and shall include within their Conformance Statement information as described in the following sections.

An implementation may conform to this SOP Class as an SCU, SCP or both. The Conformance Statement shall be in the format defined in PS 3.2.

F.9.4.1 SCU Conformance

An implementation which is conformant to this SOP Class as an SCU shall meet conformance requirements for the:

— notifications which it receives

Provided by IHS
No reproduction or networking permitted without license from IHS Not for Resale

F.9.4.1.1 Notifications

All standard event types for which notifications may be requested by the SCU shall be enumerated in the SCU Notifications Statement. The SCU Notifications Statement shall include an enumerated list of the event types supported:

[— Performed Procedure Step In Progress;]
[— Performed Procedure Step Completed;]
[— Performed Procedure Step Discontinued;]
[— Performed Procedure Step Updated;]
[— Performed Procedure Step Deleted;]

F.9.4.2 SCP Conformance

An implementation which is conformant to this SOP Class as an SCP shall meet conformance requirements for:

— notifications which it invokes

F.9.4.2.1 Notifications

Any optional Attributes which may be included in Standard notifications to the SCU shall be enumerated in the SCP Notifications Statement. The SCP Notifications Statement shall be formatted as defined in PS 3.2. Following this statement shall be the list of event types and optional Attributes.

F.10 GENERAL PURPOSE SCHEDULED PROCEDURE STEP SOP CLASS

F.10.1 DIMSE Service Group

The DIMSE Services shown in Table F.10.1-1 are applicable to the General Purpose Scheduled Procedure Step IOD under the General Purpose Scheduled Procedure Step SOP Class.

Table F.10.1-1
DIMSE SERVICE GROUP

DIMSE Service Element	Usage SCU/SCP
N-ACTION	M/M

The DIMSE Services and Protocols are specified in PS 3.7

F.10.2 Operations

The DICOM AEs that claim conformance to this SOP Class as an SCU shall invoke the N-ACTION operation. The DICOM AEs that claim conformance to this SOP Class as an SCP shall support the N-ACTION operation.

F.10.2.1 Modify General Purpose Scheduled Procedure Step Information Request

This operation allows an SCU to request the modification of Attribute Values of an instance of the General Purpose Scheduled Procedure Step SOP Class and provide information about a specific real-world General Purpose Scheduled Procedure Step that is under control of the SCP. This operation shall be invoked through the DIMSE N-ACTION Service.

F.10.2.1.1 Action Information

The Application Entity which claims conformance to this SOP Class as an SCU may choose to request the modification of a subset of the Attributes maintained by the SCP.

The DICOM AEs that claim conformance to this SOP Class as an SCU and/or an SCP shall support the Action Types and Action Information as specified in Table F.10.2-1.

Provided by IHS
No reproduction or networking permitted without license from IHS
Not for Resale

Table F.10.2-1
MODIFY GP-SPS INFORMATION REQUEST – ACTION INFORMATION

Action Type Name	Action Type ID	Attribute	Tag	Requirement Type SCU/SCP
Request GP-SPS Status Modification	1	General Purpose Scheduled Procedure Step Status	(0040,4001)	1/1
		Transaction UID	(0008,1195)	1/1
		Actual Human Performers Sequence	(0040,4035)	3/1
		>Human Performer Code Sequence	(0040,4009)	1/1
		>>Code Value	(0008,0100)	1/1
		>>Coding Scheme designator	(0008,0102)	1/1
		>>Code Meaning	(0008,0104)	1/1
		>Human Performer's Name	(0040,4037)	3/3
		>Human Performer's Organization	(0040,4036)	3/3

F.10.2.1.2 Service Class User Behavior

The SCU shall specify in the Requested SOP Instance UID parameter of the N-ACTION request primitive the UID of the General Purpose Scheduled Procedure Step SOP Instance for which it wants to modify Action Information, as specified in Table F.10.2-1.

Note: In the usage described here, there is no explicit creation of a SOP Instance upon which an N-ACTION primitive may operate. Instead, the N-ACTION primitive operates upon a SOP Instance previously created by the SCP. The SCU will retrieve the value for the SOP Instance UID by means of the General Purpose Worklist C-FIND service.

The SCU shall specify the requested value for the Attribute "General Purpose Scheduled Procedure Step Status" (0040,4001) in the Action Information.

The encoding rules for General Purpose Scheduled Procedure Step Action Information are specified in the N-ACTION request primitive specification in PS 3.7

The SCU shall not send N-ACTION request primitives for a General Purpose Scheduled Procedure Step SOP Instance when the Attribute "General Purpose Scheduled Procedure Step Status" (0040,4001) of that SOP Instance is "COMPLETED" or "DISCONTINUED".

Provided by IHS
No reproduction or networking permitted without license from IHS
Not for Resale

The SCU shall supply a “Transaction UID” Attribute (0008,1195) to identify the Modify GP-SPS Information Request that requests a modification of the value of the Attribute “General Purpose Scheduled Procedure Step Status” (0040,4001) to “IN PROGRESS”. The same Transaction UID shall be used to request a modification of the status from “IN PROGRESS” to: “SUSPENDED”, “SCHEDULED”, “COMPLETED” or “DISCONTINUED”. Once the status has any other value than “IN PROGRESS” this Transaction UID shall no longer be used.

Note: This “Transaction UID” Attribute (0008,1195) is used to identify the single transition into the “IN PROGRESS” state, not the ownership of the General Purpose Procedure Step SOP Instance.

F.10.2.1.3 Service Class Provider Behavior

The N-ACTION operation allows the SCU to request that the SCP update selected Attribute values for a specific General Purpose Scheduled Procedure Step SOP Instance. This operation shall be invoked through the use of the DIMSE N-ACTION Service used in conjunction with the appropriate General Purpose Scheduled Procedure Step SOP Instance.

The SCP shall return, via the N-ACTION response primitive, the N-ACTION Response Status Code applicable to the associated request. Contingent on the N-ACTION Response Status, the SCP shall update the Referenced General Purpose Scheduled Procedure Step Attributes.

The SCP shall accept N-ACTION request primitives for a SOP Instance only if the value of the Attribute “General Purpose Scheduled Procedure Step Status” (0040,4001) of that SOP Instance is “SCHEDULED” or “SUSPENDED” or “IN PROGRESS”. If the General Purpose Scheduled Procedure Step Status attribute has a value of “COMPLETED” or “DISCONTINUED”, the SCP shall send the failure status code as specified in Section F.10.2.1.4.

When the value of the Attribute “General Purpose Scheduled Procedure Step Status” (0040,4001) of the SOP Instance is “IN PROGRESS”, the SCP shall accept N-ACTION request primitives only if the Transaction UID of the request primitive equals the Transaction UID of the request primitive which has successfully requested the modification of the value of this Attribute to “IN PROGRESS”. If another value is used, the SCP shall send the failure status code as specified in Section F.10.2.1.4.

F.10.2.1.4 Status Codes

The status values which are specific for this SOP Class are defined in Table F.10.2-2.

Table F.10.2-2
SOP CLASS STATUS VALUES

Status	Meaning	Code
Success	The requested modification of the attribute value is performed	0000
Failure	Refused because General Purpose Scheduled Procedure Step Object may no longer be updated	A501
	Refused because the wrong Transaction UID is used.	A502
	Refused because the General Purpose Scheduled Procedure Step SOP Instance is already in the “IN PROGRESS” state	A503

Provided by IHS
No reproduction or networking permitted without license from IHS
Not for Resale

F.10.3 General Purpose Scheduled Procedure Step SOP Class UID

The General Purpose Scheduled Procedure Step SOP Class shall be uniquely identified by the General Purpose Scheduled Procedure Step SOP Class UID which shall have the value "1.2.840.10008.5.1.4.32.2".

F.10.4 Conformance Requirements

Implementations providing conformance to the General Purpose Scheduled Procedure Step SOP Class shall be conformant as described in the following sections and shall include within their Conformance Statement information as described below.

An implementation may conform to this SOP Class as an SCU or as an SCP. The Conformance Statement shall be in the format defined in Annex A of PS 3.2.

An implementation which conforms to the General Purpose Scheduled Procedure Step SOP Class shall also support the General Purpose Worklist Management Meta SOP Class.

F.10.4.1 SCU Conformance

An implementation, which is conformant to this SOP Class as an SCU, shall meet conformance requirements for the operations that it invokes.

F.10.4.1.1 Operations

The SCU Conformance Statement shall be formatted as defined in Annex A of PS 3.2.

An implementation, which conforms to this SOP Class as an SCU, shall specify under which conditions during the performance of the real-world Performed Procedure Step it will request the modification of the value of the Attribute "General Purpose Scheduled Procedure Step Status" (0040,4001) to "IN PROGRESS", "SUSPENDED", "COMPLETED","DISCONTINUED", and "SCHEDULED".

F.10.4.2 SCP Conformance

An implementation which is conformant to this SOP Class as an SCP shall meet conformance requirements for the operations which it performs.

F.10.4.2.1 Operations

The SCP Conformance Statement shall be formatted as defined in Annex A of PS 3.2.

The SCP Conformance Statement shall provide information on the behavior of the SCP (the Workflow Manager) at the following occurrences:

- The creation of a new Instance of the General Purpose Scheduled Procedure Step SOP Class with the status "SCHEDULED". The result of that process on the scheduling information and on the Attribute Values of the General Purpose Worklist SOP Class shall be specified.
- The conditions for the update of the Attribute "General Purpose Scheduled Procedure Step Status" (0040,4001), i.e. the change from the state "DISCONTINUED" to "COMPLETED", or to "SCHEDULED".
- Which Attributes the SCP may update after the state has been set to "IN PROGRESS" or "SUSPENDED" or "DISCONTINUED" or "COMPLETED".
- For how long the General Purpose Scheduled Procedure Step SOP Instance will persist on the SCP, once its state has been set to "COMPLETED" or "DISCONTINUED".

Provided by IHS
No reproduction or networking permitted without license from IHS
Not for Resale

F.11 GENERAL PURPOSE PERFORMED PROCEDURE STEP SOP CLASS

F.11.1 DIMSE Service Group

The DIMSE Services shown in Table F.11.1-1 are applicable to the General Purpose Performed Procedure Step IOD under the General Purpose Performed Procedure Step SOP Class.

Table F.11.1-1
DIMSE SERVICE GROUP

DIMSE Service Element	Usage SCU/SCP
N-CREATE	M/M
N-SET	M/M
N-GET	U/M

The DIMSE Services and Protocols are specified in PS 3.7

F.11.2 Operations

The Application Entity which claims conformance to this SOP Class as an SCU shall be permitted to invoke the following operations and the Application Entity which claims conformance as an SCP shall be capable of providing the following operations.

F.11.2.1 CREATE General Purpose Performed Procedure Step SOP Instance

This operation allows an SCU to create an instance of the General Purpose Performed Procedure Step SOP Class and provide information about a specific real-world Performed Procedure Step that is under control of the SCU. This operation shall be invoked through the DIMSE N-CREATE Service.

Note : Some of the attribute values are already known at the beginning of the General Purpose Performed Procedure Step. They are required to be sent in the N-CREATE command. Other mandatory attributes are known only at the end of the General Purpose Performed Procedure Step. They are assigned a value in the N-SET command.

F.11.2.1.1 General Purpose Performed Procedure Step Subset Specification

The Application Entity which claims conformance to this SOP Class as an SCU must provide all Required Attributes as specified in Table F.11.2-1. Optional Attributes maintained by the SCP may be provided as well. The Application Entity which claims conformance as an SCP to this SOP Class shall support the subset of the General Purpose Performed Procedure Step Attributes specified in Table F.11.2-1.

Table F.11.2-1
GENERAL PURPOSE PERFORMED PROCEDURE STEP SOP CLASS N-CREATE, N-SET AND FINAL STATE ATTRIBUTES

Attribute Name	Tag	Req. Type N-CREATE (SCU/SCP)	Req. Type N-SET (SCU/SCP)	Requirement Type Final State (See Note 1)
Specific Character Set	(0008,0005)	1C/1C (Required if an extended or replacement character set is used)	Not allowed	
General Purpose Performed Procedure Step Relationship				
Referenced Request	(0040,A370)	2/2	Not allowed	

--`,,```,,,,````-`-`,,`,,`,`,,`---

Provided by IHS
No reproduction or networking permitted without license from IHS
Not for Resale

Sequence				
>Study Instance UID	(0020,000D)	1C/1 (Required if Sequence Item is present)	Not allowed	
>Referenced Study Sequence	(0008,1110)	2C/2 (Required if Sequence Item is present)	Not allowed	
>>Referenced SOP Class UID	(0008,1150)	1C/1 (Required if Sequence Item is present)	Not allowed	
>>Referenced SOP Instance UID	(0008,1155)	1C/1 (Required if Sequence Item is present)	Not allowed	
>Accession Number	(0008,0050)	2C/2 (Required if Sequence Item is present)	Not allowed	
>Requested Procedure Code Sequence	(0032,1064)	2C/2 (Required if Sequence Item is present)	Not allowed	
>>Code Value	(0008,0100)	1C/1 (Required if Sequence Item is present)	Not allowed	
>>Coding Scheme designator	(0008,0102)	1C/1 (Required if Sequence Item is present)	Not allowed	
>>Coding Scheme Version	(0008,0103)	3/3	Not allowed	
>>Code Meaning	(0008,0104)	1C/1 (Required if Sequence Item is present)	Not allowed	
>Placer Order Number/Imaging Service Request	(0040,2016)	3/3	Not allowed	
>Filler Order Number/Imaging Service Request	(0040,2017)	3/3	Not allowed	
>Requested Procedure ID	(0040,1001)	2C/2 (Required if Sequence Item is	Not allowed	

--`,,```,,,,````-`-`,,`,,`,`,,`---

Provided by IHS
No reproduction or networking permitted without license from IHS
Not for Resale

		present)		
>Requested Procedure Description	(0032,1060)	2C/2 (Required if Sequence Item is present)	Not allowed	
Referenced General Purpose Scheduled Procedure Step Sequence	(0040,4016)	1C/1C Required if related General Purpose Scheduled Procedure Step exists	Not allowed	
>Referenced SOP Class UID	(0008,1150)	1C/1 (Required if Sequence Item is present)	Not allowed	
>Referenced SOP Instance UID	(0008,1155)	1C/1 (Required if Sequence Item is present)	Not allowed	
>Referenced General Purpose Scheduled Procedure Step Transaction UID	(0040,4023)	1C/1 (Required if Sequence Item is present)	Not allowed	
Patient's Name	(0010,0010)	2/2	Not allowed	
Patient ID	(0010,0020)	2/2	Not allowed	
Issuer of Patient ID	(0010,0021)	3/3	Not allowed	
Patient's Birth Date	(0010,0030)	2/2	Not allowed	
Patient's Sex	(0010,0040)	2/2	Not allowed	
Admission ID	(0038,0010)	3/3	Not allowed	
Issuer of Admission ID	(0038,0011)	3/3	Not allowed	
General Purpose Performed Procedure Step Information				
Actual Human Performers Sequence	(0040,4035)	2/2	Not allowed	
>Human Performer Code Sequence	(0040,4009)	1C/1 (Required if Sequence Item is present)	Not allowed	
>>Code Value	(0008,0100)	1C/1 (Required if Sequence Item is present)	Not allowed	
>>Coding Scheme Designator	(0008,0102)	1C/1 (Required if Sequence Item is present)	Not allowed	
>>Coding Scheme	(0008,0103)	3/3	Not allowed	

Provided by IHS
No reproduction or networking permitted without license from IHS
Not for Resale

Version				
>>Code Meaning	(0008,0104)	1C/1 (Required if Sequence Item is present)	Not allowed	
>Human Performer's Name	(0040,4037)	3/3	Not allowed	
>Human Performer's Organization	(0040,4036)	3/3	Not allowed	
Performed Procedure Step ID	(0040,0253)	1/1	Not allowed	
Performed Station Name Code Sequence	(0040,4028)	2/2	Not allowed	
>Code Value	(0008,0100)	1C/1 (Required if Sequence Item is present)	Not allowed	
>Coding Scheme Designator	(0008,0102)	1C/1 (Required if Sequence Item is present)	Not allowed	
>Coding Scheme Version	(0008,0103)	3/3	Not allowed	
>Code Meaning	(0008,0104)	1C/1 (Required if Sequence Item is present)	Not allowed	
Performed Station Class Code Sequence	(0040,4029)	2/2	Not allowed	
>Code Value	(0008,0100)	1C/1 (Required if Sequence Item is present)	Not allowed	
>Coding Scheme Designator	(0008,0102)	1C/1 (Required if Sequence Item is present)	Not allowed	
>Coding Scheme Version	(0008,0103)	3/3	Not allowed	
>Code Meaning	(0008,0104)	1C/1 (Required if Sequence Item is present)	Not allowed	
Performed Station Geographic Location Code Sequence	(0040,4030)	2/2	Not allowed	
>Code Value	(0008,0100)	1C/1	Not allowed	

Provided by IHS
No reproduction or networking permitted without license from IHS
Not for Resale

		(Required if Sequence Item is present)		
>Coding Scheme Designator	(0008,0102)	1C/1 (Required if Sequence Item is present)	Not allowed	
>Coding Scheme Version	(0008,0103)	3/3	Not allowed	
>Code Meaning	(0008,0104)	1C/1 (Required if Sequence Item is present)	Not allowed	
Performed Processing Applications Code Sequence	(0040,4007)	2/2	Not Allowed	
>Code Value	(0008,0100)	1C/1 (Required if Sequence Item is present)	Not allowed	
>Coding Scheme Designator	(0008,0102)	1C/1 (Required if Sequence Item is present)	Not allowed	
>Coding Scheme Version	(0008,0103)	3/3	Not allowed	
>Code Meaning	(0008,0104)	1C/1 (Required if Sequence Item is present)	Not allowed	
Performed Procedure Step Start Date	(0040,0244)	1/1	Not allowed	
Performed Procedure Step Start Time	(0040,0245)	1/1	Not allowed	
General Purpose Performed Procedure Step Status	(0040,4002)	1/1	3/1	
Performed Procedure Step Description	(0040,0254)	2/2	3/2	
Comments on the Performed Procedure Step	(0040,0280)	3/3	3/3	
Performed Workitem Code Sequence	(0040,4019)	2/2	Not allowed	
>Code Value	(0008,0100)	1C/1 (Required if Sequence Item is present)	Not allowed	

Provided by IHS
No reproduction or networking permitted without license from IHS
Not for Resale

>Coding Scheme designator	(0008,0102)	1C/1 (Required if Sequence Item is present)	Not allowed	
>Coding Scheme Version	(0008,0103)	3/3	Not allowed	
>Code Meaning	(0008,0104)	1C/1 (Required if Sequence Item is present)	Not allowed	
Performed Procedure Step End Date	(0040,0250)	2/2	3/1	1
Performed Procedure Step End Time	(0040,0251)	2/2	3/1	1
General Purpose Results				
Output Information Sequence	(0040,4033)	2/2	2/2	See F.11.2.2.2.
>Study Instance UID	(0020,000D)	1C/1 (Required if Sequence Item is present)	1C/1 (Required if Sequence Item is present)	
>Referenced Series Sequence	(0008,1115)	1C/1 (Required if Sequence Item is present)	1C/1 (Required if Sequence Item is present)	
>>Series Instance UID	(0020,000E)	1C/1 (Required if Sequence Item is present)	1C/1 (Required if Sequence Item is present)	
>>Retrieve AE Title	(0008,0054)	2C/2 (Required if Sequence Item is present and Storage Media File-Set ID (0088,0130) or Storage Media File-Set UID (0088,0140) is not present)	2C/2 (Required if Sequence Item is present and Storage Media File-Set ID (0088,0130) or Storage Media File-Set UID (0088,0140) is not present)	
>>Storage Media File-Set ID	(0088,0130)	2C/2 (Required if Sequence Item is present and Retrieve AE Title (0008,0054) is not present)	2C/2 (Required if Sequence Item is present and Retrieve AE Title (0008,0054) is not present)	
>>Storage Media File-Set UID	(0088,0140)	2C/2 (Required if Sequence Item is present and Retrieve	2C/2 (Required if Sequence Item is present and Retrieve	

Provided by IHS
No reproduction or networking permitted without license from IHS
Not for Resale

		AE Title (0008,0054) is not present)	AE Title (0008,0054) is not present)	
>>Referenced SOP Sequence	(0008,1199)	1C/1 (Required if Sequence Item is present)	1C/1 (Required if Sequence Item is present)	
>>>Referenced SOP Class UID	(0008,1150)	1C/1 (Required if Sequence Item is present)	1C/1 (Required if Sequence Item is present)	
>>>Referenced SOP Instance UID	(0008,1155)	1C/1 (Required if Sequence Item is present)	1C/1 (Required if Sequence Item is present)	
Requested Subsequent Workitem Code Sequence	(0040,4031)	2/2	2/2	
>Code Value	(0008,0100)	1C/1 (Required if Sequence Item is present)	1C/1 (Required if Sequence Item is present)	
>Coding Scheme Designator	(0008,0102)	1C/1 (Required if Sequence Item is present)	1C/1 (Required if Sequence Item is present)	
>Coding Scheme Version	(0008,0103)	3/3	3/3	
>Coding Meaning	(0008,0104)	1C/1 (Required if Sequence Item is present)	1C/1 (Required if Sequence Item is present)	
Non-DICOM Output Code Sequence	(0040,4032)	2/2	2/2	
>Code Value	(0008,0100)	1C/1 (Required if Sequence Item is present)	1C/1 (Required if Sequence Item is present)	
>Coding Scheme Designator	(0008,0102)	1C/1 (Required if Sequence Item is present)	1C/1 (Required if Sequence Item is present)	
>Coding Scheme Version	(0008,0103)	3/3	3/3	
>Coding Meaning	(0008,0104)	1C/1 (Required if Sequence Item is present)	1C/1 (Required if Sequence Item is present)	

Provided by IHS
No reproduction or networking permitted without license from IHS
Not for Resale

Note: The requirement for the final state is that which applies at the time that the General Purpose Performed Procedure Step Status (0040,4002) is N-SET to a value of COMPLETED or DISCONTINUED, as described in F.11.2.2.2. It is only described if it is different from the SCP requirement for the N-CREATE.

F.11.2.1.2 Service Class User

The SCU shall specify in the N-CREATE request primitive the SOP Class and SOP Instance UIDs of the General Purpose Performed Procedure Step SOP Instance which is created and for which Attribute Values are to be provided.

The SCU shall provide Attribute values for the General Purpose Performed Procedure Step SOP Class Attributes as specified in Table F.11.2-1. Additionally, values may be provided for optional General Purpose Performed Procedure Step IOD Attributes that are supported by the SCP. The encoding rules for General Purpose Performed Procedure Step Attributes are specified in the N-CREATE request primitive specification in PS 3.7.

The SCU shall be capable of providing all required Attribute values to the SCP in the N-CREATE request primitive. The SCU may provide Attribute values for optional Attributes which are not maintained by the SCP. In such case the SCU shall function properly regardless of whether the SCP accepts values for those Attributes or not.

All Attributes shall be created before they can be set. Sequence Attributes shall be created before they can be filled. Sequence Item Attributes shall not be created at zero length.

Note: Not all the attributes that can be created can be set afterwards (see Table F.11.2-1).

The SCU shall only send the N-CREATE request primitive with the value for the Attribute “General Purpose Performed Procedure Step Status” (0040,4002) set to “IN PROGRESS”.

F.11.2.1.3 Service Class Provider

The N-CREATE operation allows the SCU to provide to the SCP selected Attribute values for a specific General Purpose Performed Procedure Step SOP Instance. This operation shall be invoked through the use of the DIMSE N-CREATE Service used in conjunction with the appropriate General Purpose Performed Procedure Step SOP Instance.

The SCP shall return, via the N-CREATE response primitive, the N-CREATE Response Status Code applicable to the associated request.

The SCP shall accept N-CREATE request primitives only if the value of the Attribute “General Purpose Performed Procedure Step Status” (0040,4002) is “IN PROGRESS”. If the General Purpose Performed Procedure Step Status attribute has another value, the SCP shall set the failure status code “Invalid attribute value” (Code: 0106H) with an Attribute List.

If the General Purpose Performed Procedure Step SOP Instance is related to a general Purpose Scheduled Procedure Step SOP Instance, then the SCP shall accept N-CREATE request primitives only if the value of the Attribute “General Purpose Scheduled Procedure Step Status” (0040,4001) has the value “IN PROGRESS”. If the General Purpose Scheduled Procedure Step Status attribute has another value, the SCP shall send the failure status code as specified in Section F.11.2.1.4.

If a Referenced General Purpose Scheduled Procedure Step Sequence (0040,4016) item is present in the N-CREATE request, then the Referenced General Purpose Scheduled Procedure Step Transaction UID (0040,4023) contained therein shall be the same as the Transaction UID (0008,1195) that identifies the transaction of the General Purpose Scheduled Procedure Step Status (0040,4001) to “IN PROGRESS”. If the Transaction UIDs do not match, the SCP shall send the failure status code as specified in Section F.11.2.1.4.

--`,,```,,,,````-`-`,,`,,`,`,,`---

Provided by IHS
No reproduction or networking permitted without license from IHS Not for Resale

Note: In the unscheduled case no related General Purpose Scheduled Procedure Step exists, so the rules for the Transaction UID do not apply.

If a Referenced General Purpose Scheduled Procedure Step Sequence (0040,4016) item is present in the N-CREATE request, the SCP shall update the Attribute Resulting General Purpose Performed Procedure Steps Sequence (0040,4015) in the identified General Purpose Scheduled Procedure Step SOP Instance.

F.11.2.1.4 Status Codes

The status values which are specific for this SOP Class are defined in Table F.11.2-2.

Table F.11.2-2
SOP CLASS STATUS VALUES

Service Status	Meaning	Status Code
Failure	Refused because the related General Purpose Scheduled Procedure Step SOP Instance is not in the "IN PROGRESS" state.	A504
	Refused because Referenced General Purpose Scheduled Procedure Step Transaction UID does not match the Transaction UID of the N-ACTION request.	A505

F.11.2.2 SET General Purpose Performed Procedure Step Information

This operation allows an SCU to set Attribute Values of an instance of the General Purpose Performed Procedure Step SOP Class and provide information about a specific real-world General Purpose Performed Procedure Step that is under control of the SCU. This operation shall be invoked through the DIMSE N-SET Service.

F.11.2.2.1 General Purpose Performed Procedure Step IOD Subset Specification

The Application Entity which claims conformance to this SOP Class as an SCU may choose to modify a subset of the Attributes maintained by the SCP. The Application Entity which claims conformance as an SCP to this SOP Class shall support the subset of the General Purpose Performed Procedure Step Attributes specified in Table F.11.2-1.

The character set used for Attribute Values updated using the N-SET shall be the same as that specified by the N-CREATE Request Primitive.

F.11.2.2.2 Service Class User

The SCU shall specify in the N-SET request primitive the UID of the General Purpose Performed Procedure Step SOP Instance for which it wants to set Attribute Values.

The SCU shall be permitted to set Attribute values for any General Purpose Performed Procedure Step SOP Class Attribute specified in Table F.11.2-1. The SCU shall specify the list of General Purpose Performed Procedure Step SOP Class Attributes for which it wants to set the Attribute Values. The SCU shall provide, with one or more N-SET request primitives, the attribute values specified in Table F.11.2-1. The encoding rules for General Purpose Performed Procedure Step Attributes are specified in the N-SET request primitive specification in PS 3.7. The SCU shall only set Attribute Values which are already created with an N-CREATE request.

The SCU shall not send N-SET request primitives for a General Purpose Performed Procedure Step SOP Instance after a N-SET request primitive with a value for the attribute "General Purpose Performed Procedure Step Status" (0040,4002) is "COMPLETED" or "DISCONTINUED" has been sent.

Provided by IHS
No reproduction or networking permitted without license from IHS
Not for Resale

Once the General Purpose Performed Procedure Step Status (0040,4002) has been set to "COMPLETED" or "DISCONTINUED" the SCU shall no longer modify the General Purpose Performed Procedure Step SOP Instance, and shall not create new Composite SOP Instances as part of the same General Purpose Performed Procedure Step SOP Instance.

If Sequences are included in a N-SET command, all Items of a Sequence are to be included in the command and not only the Items to be updated.

Before or when General Purpose Performed Procedure Step Status (0040,4002) is set to "COMPLETED" or "DISCONTINUED" the SCU shall have created or set all the Attributes according to the requirements in the Final State column of Table F.11.2-1.

Before or when General Purpose Performed Procedure Step Status (0040,4002) is set to "COMPLETED" or "DISCONTINUED" the SCU shall have sent to the SCP a list of all Composite SOP Instances created during the Procedure Step in Output Information Sequence (0040,4033).

Note: The intent is that a completed or discontinued General Purpose Performed Procedure Step entity will contain a complete list of all the Composite Instances that were created.

The General Purpose Performed Procedure Step Status (0040,4002) shall not be set to "COMPLETED" or "DISCONTINUED" if the list contains no Composite Instance references, unless no such Instances were created.

F.11.2.2.3 Service Class Provider

The N-SET operation allows the SCU to request that the SCP update selected Attribute values for a specific General Purpose Performed Procedure Step SOP Instance. This operation shall be invoked through the use of the DIMSE N-SET Service used in conjunction with the appropriate General Purpose Performed Procedure Step SOP Instance.

The SCP shall return, via the N-SET response primitive, the N-SET Response Status Code applicable to the associated request. Contingent on the N-SET Response Status, the SCP shall update the Referenced Performed Procedure Step Attributes.

The SCP shall accept N-SET request primitives only if the value of the already existing attribute "General Purpose Performed Procedure Step Status" (0040,4002) is "IN PROGRESS". If the already existing General Purpose Performed Procedure Step Status attribute has another value, the SCP shall send the failure status code as specified in Section F.11.2.2.4.

The SCP may itself modify any Attributes of the General Purpose Performed Procedure Step SOP Instance only after the "General Purpose Performed Procedure Step Status" (0040,4002) has been set to "COMPLETED" or "DISCONTINUED", or when error conditions require such a modification.

Note: Under exceptional circumstances, it may be necessary for the SCP to itself set the Performed Procedure Step Status (0040,0252) to COMPLETED or DISCONTINUED, for example if the performing device has failed. When the SCU recovers, subsequent N-SETs may fail.

F.11.2.2.4 Status Codes

The status values which are specific for this SOP Class are defined in Table F.11.2-3.

Table F.11.2-3
SOP CLASS STATUS VALUES

Service Status	Meaning	Status Code
Failure	Refused because the General Purpose Performed Procedure Step SOP Instance is not in the "IN PROGRESS" state	A506

Provided by IHS
No reproduction or networking permitted without license from IHS
Not for Resale

F.11.2.3 GET General Purpose Performed Procedure Step Information

This operation allows an SCU to get information about a specific real-world Performed Procedure Step which is represented as a General Purpose Performed Procedure Step SOP Instance by a General Purpose Performed Procedure Step SCP. The operation is performed on a General Purpose Performed Procedure Step IOD. This operation shall be invoked through the DIMSE N-GET Service used in conjunction with the appropriate General Purpose Performed Procedure Step SOP Instance.

F.11.2.3.1 General Purpose Performed Procedure Step IOD Subset Specifications

The Application Entity which claims conformance to this SOP Class as an SCU may choose to interpret the Attribute values maintained by the SCP which the SCU receives via the operation of this SOP Class. The Application Entity which claims conformance as an SCP to this General Purpose Performed Procedure Step SOP Class shall support the subset of the General Purpose Performed Procedure Step Attributes specified in Table F.11.2-3.

Table F.11.2-3
GENERAL PURPOSE PERFORMED PROCEDURE STEP SOP CLASS N-GET ATTRIBUTES

Attribute Name	Tag	Requirement Type (SCU/SCP)
Specific Character Set	(0008,0005)	3/1C (Required if an extended or replacement character set is used)
General Purpose Performed Procedure Step Relationship		
Referenced Request Sequence	(0040,A370)	3/2
>Study Instance UID	(0020,000D)	-/1
>Referenced Study Sequence	(0008,1110)	-/2
>>Referenced SOP Class UID	(0008,1150)	-/1
>>Referenced SOP Instance UID	(0008,1155)	-/1
>Accession Number	(0008,0050)	-/2
>Requested Procedure Code Sequence	(0032,1064)	-/2
>>Code Value	(0008,0100)	-/1
>>Coding Scheme Designator	(0008,0102)	-/1
>>Coding Scheme Version	(0008,0103)	-/3
>>Code Meaning	(0008,0104)	-/1
>Placer Order Number/Imaging Service Request	(0040,2016)	-/3
>Filler Order Number/Imaging Service Request	(0040,2017)	-/3
>Requested Procedure ID	(0040,1001)	-/2
>Requested Procedure Description	(0032,1060)	-/2
Referenced General Purpose Scheduled Procedure Step Sequence	(0040,4016)	3/2
>Referenced SOP Class UID	(0008,1150)	-/1

--`,,```,,,,````-`-`,,`,,`,`,,`---

Provided by IHS
No reproduction or networking permitted without license from IHS
Not for Resale

>Referenced SOP Instance UID	(0008,1155)	-/1
>Referenced General Purpose Scheduled Procedure Step Transaction UID	(0040,4023)	-/1
Patient's Name	(0010,0010)	3/2
Patient ID	(0010,0020)	3/2
Patient's Birth Date	(0010,0030)	3/2
Patient's Sex	(0010,0040)	3/2
Admission ID	(0038,0010)	-/3
Issuer of Admission ID	(0038,0011)	-/3
General Purpose Performed Procedure Step Information		
Actual Human Performers Sequence	(0040,4035)	-/2
>Human Performer Code Sequence	(0040,4009)	-/1
>>Code Value	(0008,0100)	-/1
>>Coding Scheme Designator	(0008,0102)	-/1
>>Coding Scheme Version	(0008,0103)	-/3
>>Code Meaning	(0008,0104)	-/1
>Human Performer's Name	(0040,4037)	-/3
>Human Performer's Organization	(0040,4036)	-/3
Performed Procedure Step ID	(0040,0253)	3/1
Performed Station Name Code Sequence	(0040,4028)	3/2
>Code Value	(0008,0100)	-/1
>Coding Scheme Designator	(0008,0102)	-/1
>Coding Scheme Version	(0008,0103)	-/3
>Code Meaning	(0008,0104)	-/1
Performed Station Class Code Sequence	(0040,4029)	3/2
>Code Value	(0008,0100)	-/1
>Coding Scheme Designator	(0008,0102)	-/1
>Coding Scheme Version	(0008,0103)	-/3
>Code Meaning	(0008,0104)	-/1
Performed Station Geographic Location Code Sequence	(0040,4030)	3/2
>Code Value	(0008,0100)	-/1
>Coding Scheme Designator	(0008,0102)	-/1
>Coding Scheme Version	(0008,0103)	-/3
>Code Meaning	(0008,0104)	-/1
Performed Processing	(0040,4007)	3/2

Provided by IHS
No reproduction or networking permitted without license from IHS
Not for Resale

Applications Code Sequence		
>Code Value	(0008,0100)	-/1
>Coding Scheme Designator	(0008,0102)	-/1
>Coding Scheme Version	(0008,0103)	-/3
>Code Meaning	(0008,0104)	-/1
Performed Procedure Step Start Date	(0040,0244)	3/1
Performed Procedure Step Start Time	(0040,0245)	3/1
General Purpose Performed Procedure Step Status	(0040,4002)	3/1
Performed Procedure Step Description	(0040,0254)	3/2
Comments on the Performed Procedure Step	(0040,0280)	3/3
Performed Workitem Code Sequence	(0040,4019)	3/2
>Code Value	(0008,0100)	-/1
>Coding Scheme Designator	(0008,0102)	-/1
>Coding Scheme Version	(0008,0103)	-/3
>Code Meaning	(0008,0104)	-/1
Performed Procedure Step End Date	(0040,0250)	3/2
Performed Procedure Step End Time	(0040,0251)	3/2
General Purpose Results		
Output Information Sequence	(0040,4033)	-/2
>Study Instance UID	(0020,000D)	-/1
>Referenced Series Sequence	(0008,1115)	-/1
>>Series Instance UID	(0020,000E)	-/1
>>Retrieve AE Title	(0008,0054)	-/2C Shall not be present if Storage Media File-Set ID (0088,0130) or Storage Media File-Set UID (0088,0140) is present.
>>Storage Media File-Set ID	(0088,0130)	-/2C Shall not be present if Retrieve AE Title (0008,0054) is present.
>>Storage Media File-Set UID	(0088,0140)	-/2C Shall not be present if Retrieve AE Title (0008,0054) is present.
>>Referenced SOP Sequence	(0008,1199)	-/1
>>>Referenced SOP Class UID	(0008,1150)	-/1
>>>Referenced SOP Instance UID	(0008,1155)	-/1

Provided by IHS
No reproduction or networking permitted without license from IHS
Not for Resale

Requested Subsequent Workitem Code Sequence	(0040,4031)	3/2
>Code Value	(0008,0100)	-/1
>Coding Scheme Designator	(0008,0102)	-/1
>Coding Scheme Version	(0008,0103)	-/3
>Code Meaning	(0008,0104)	-/1
Non-DICOM output Code Sequence	(0040,4032)	3/2
>Code Value	(0008,0100)	-/1
>Coding Scheme Designator	(0008,0102)	-/1
>Coding Scheme Version	(0008,0103)	-/3
>Code Meaning	(0008,0104)	-/1

F.11.2.3.2 Service Class User

The SCU uses the N-GET Service Element to request the SCP to get a General Purpose Performed Procedure Step SOP Instance. The SCU shall specify in the N-GET request primitive the UID of the SOP Instance to be retrieved. The SCU shall be permitted to request that Attribute Values be returned for any General Purpose Performed Procedure Step SOP Class Attribute specified in Table F.11.2-3. Additionally values may be requested for optional General Purpose Performed Procedure Step IOD Attributes.

The SCU shall specify the list of General Purpose Performed Procedure Step SOP Class Attributes for which values are to be returned. The encoding rules for General Purpose Performed Procedure Step Attributes are specified in the N-GET request primitive specification in PS 3.7.

In an N-GET operation, the values of Attributes which are defined within a Sequence of Items shall not be requested by an SCU.

The SCU shall be capable of receiving all requested Attribute Values provided by the SCP in response to the N-GET indication primitive. The SCU may request Attribute Values for optional Attributes which are not maintained by the SCP. In such a case, the SCU shall function properly regardless of whether the SCP returns values for those Attributes or not. This Service Class Specification places no requirements on what the SCU shall do as a result of receiving this information.

Note: In order to accurately interpret the character set used for the Attribute Values returned, it is recommended that the Attribute Value for the Specific Character Set (0008,0005) be requested in the N-GET request primitive.

F.11.2.3.3 Service Class Provider

The N-GET operation allows the SCU to request from the SCP selected Attribute values for a specific General Purpose Performed Procedure Step SOP Instance. This operation shall be invoked through the use of the DIMSE N-GET Service used in conjunction with the appropriate General Purpose Performed Procedure Step SOP Instance. The SCP shall retrieve the selected Attribute values from the indicated General Purpose Performed Procedure Step SOP Instance.

The SCP shall return, via the N-GET response primitive, the N-GET Response Status Code applicable to the associated request. A Failure Code shall indicate that the SCP has not retrieved the SOP Instance. Contingent on the N-GET Response Status, the SCP shall return, via the N-GET response primitive, Attribute Values for all requested Attributes maintained by the SCP.

Provided by IHS
No reproduction or networking permitted without license from IHS
Not for Resale

F.11.2.3.4 Status Codes

The status values which are specific for this SOP Class and DIMSE Service are defined in Table F.11.2-4. See PS 3.7 for additional response status codes.

Table F.11.2-4
N-GET STATUS

Service Status	Further Meaning	Response Status Code
Warning	Requested optional Attributes are not supported	0001

F.11.3 General Purpose Performed Procedure Step SOP Class UID

The General Purpose Performed Procedure Step SOP Class shall be uniquely identified by the General Purpose Performed Procedure Step SOP Class UID which shall have the value "1.2.840.10008.5.1.4.32.3".

F.11.4 Conformance Requirements

Implementations providing conformance to the General Purpose Performed Procedure Step SOP Class shall be conformant as described in the following sections and shall include within their Conformance Statement information as described below.

An implementation may conform to this SOP Class as an SCU or as an SCP. The Conformance Statement shall be in the format defined in Annex A of PS 3.2.

An implementation which conforms to the General Purpose Performed Procedure Step SOP Class shall also support the General Purpose Worklist Management Meta SOP Class.

F.11.4.1 SCU Conformance

An implementation which is conformant to this SOP Class as an SCU shall meet conformance requirements for the operations which it invokes.

F.11.4.1.1 Operations

Any Attributes for which Attribute Values may be provided (using the N-CREATE Service) by the SCU shall be enumerated in the SCU Conformance Statement. The SCU Conformance Statement shall be formatted as defined in Annex A of PS 3.2.

Any Attributes for which Attribute Values may be provided (using the N-SET Service) by the SCU shall be enumerated in the SCU Conformance Statement.

An implementation which conforms to this SOP Class as an SCU shall specify under which conditions during the performance of the real-world Performed Procedure Step it will create the SOP Class Instance and under which conditions it will set the General Purpose Performed Procedure Step Status (0040,4002) value to COMPLETED and DISCONTINUED.

Any Attributes for which Attribute Values may be requested (using the N-GET Service) by the SCU shall be enumerated in the SCU Conformance Statement.

F.11.4.2 SCP Conformance

An implementation which is conformant to this SOP Class as an SCP shall meet conformance requirements for the operations which it performs.

--`,,```,,,,````-`-`,,`,,`,`,,`---

Provided by IHS
No reproduction or networking permitted without license from IHS
Not for Resale

F.11.4.2.1 Operations

Any Attributes for which Attribute Values may be provided (using the N-CREATE Service) by the SCU shall be enumerated in the SCP Conformance Statement. The SCP Conformance Statement shall be formatted as defined in Annex A of PS 3.2.

Any Attributes for which Attribute Values may be updated (using the N-SET Service) by the SCU shall be enumerated in the SCP Conformance Statement.

Any Attributes for which Attribute Values may be requested (using the N-GET Service) by the SCU shall be enumerated in the SCP Conformance Statement.

The SCP Conformance Statement shall also provide information on the behavior of the SCP (the Information System) at the following occurrences:

- The creation of a new Instance of the General Purpose Performed Procedure Step SOP Class with the status “IN PROGRESS”. The result of that process on the scheduling information and on the attributes values of the General Purpose Worklist SOP Class shall be specified.
- The update of the Attribute “Performed Procedure Step Status”, i.e. the change from the state “IN PROGRESS” to “DISCONTINUED” or to “COMPLETED”.
- Which Attributes the SCP may coerce after the state has been set to “IN PROGRESS” or “DISCONTINUED” or to “COMPLETED”.
- For how long the General Purpose Performed Procedure Step SOP Instance will persist on the SCP.

Provided by IHS
No reproduction or networking permitted without license from IHS
Not for Resale

Annex G RESULTS MANAGEMENT SERVICE CLASS (Normative)

Retired. See PS 3.4 2004.

Provided by IHS
No reproduction or networking permitted without license from IHS
Not for Resale

Annex H PRINT MANAGEMENT SERVICE CLASS (Normative)

H.1 SCOPE

The Print Management Service Class defines an application-level class-of-service which facilitates the printing of images and image related data on a hard copy medium.

Note: The DICOM Print Management Service Class covers the general cases of printing medical images in standardized layouts. An application can obtain more flexible layout, annotation, and formatting either by direct manipulation of the pixel matrices used in DICOM Print Management, or by utilizing page descriptions written in a page description language (such as Postscript or PDF) that are communicated to the printing system using commonly available protocols. These other page descriptions languages are not communicated using DICOM protocols and their use is outside the scope of the DICOM Standard.

H.2 PRINT MANAGEMENT MODEL

H.2.1 Print Management Data Flow Model

H.2.1.1 Global Data Flow Model

The Print Management Data Flow Model (Figure H.2-1) consists of three main processes:

- Film Session Management process
- Print process

Note: The Standard uses the word film as a general name for different types of hard copy media (e.g. photographic film, paper).

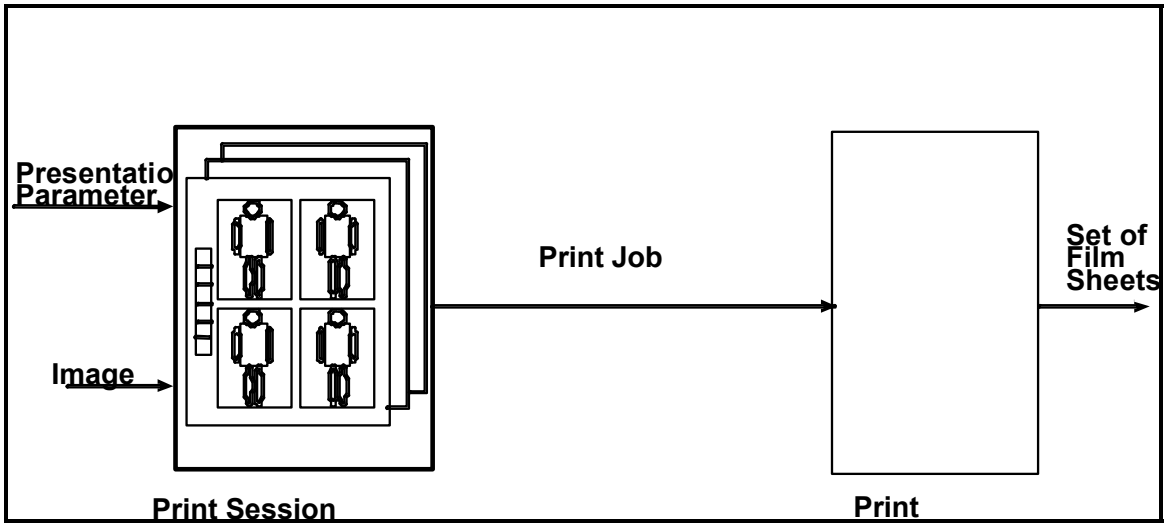

Figure H.2-1
PRINT MANAGEMENT DATA FLOW MODEL

The Film Session Management process is responsible for acquiring all the information which is required to print the film session. The film session is the atomic work package of the Print Management Application and contains one or more films related in a user defined way (e.g.,

Provided by IHS
No reproduction or networking permitted without license from IHS
Not for Resale

belonging to the same exam, patient) that are originated from one host (e.g., workstation, diagnostic modality) and that are printed on one hard copy printer.

Each film consists of one or more images and zero or more film related annotations. An annotation consists of one or more lines of text.

Each image consists of pixel data and zero or more overlay planes. The user controls the look of the film by assigning values to print parameters.

Print parameters are defined at film session, film, image and annotation levels. The parameter level determines the scope of operation of the print parameters (e.g., print parameters of the image level are valid for the corresponding image).

The inputs of the Film Session Management process are:

— set of images and image related data

— presentation data that describes the visual look of the films

The output of the Film Session Management process is the Print Job, which contains all the information to print the film session.

The Print process prints a set of films, based on the information in the Print Job. The Print process is implementation specific and its management is beyond the scope of the DICOM standard.

H.2.1.2 Grayscale Transformations

The Print Management Service Class supports two grayscale transformations and spatial transformations that converts an original image into a printed image.

The sequence of spatial transformations (e.g., magnification and merging of annotation with images) and their relationships with the grayscale transformations are implementation specific and fall beyond the scope of the DICOM Standard.

The sequence of grayscale transformations is important for achieving consistent image quality because of the non-orthogonal nature of the different transformations. Figure H.2-2 describes the sequence of grayscale transformations.

Note: This section previously described Modality LUT and VOI LUT transformations in more detail. Since Referenced Print SOP Classes have been retired, these descriptions no longer apply to the Print Management Service Class. See PS 3.4-1998.

--`,,```,,,,````-`-`,,`,,`,`,,`---

Provided by IHS
No reproduction or networking permitted without license from IHS Not for Resale

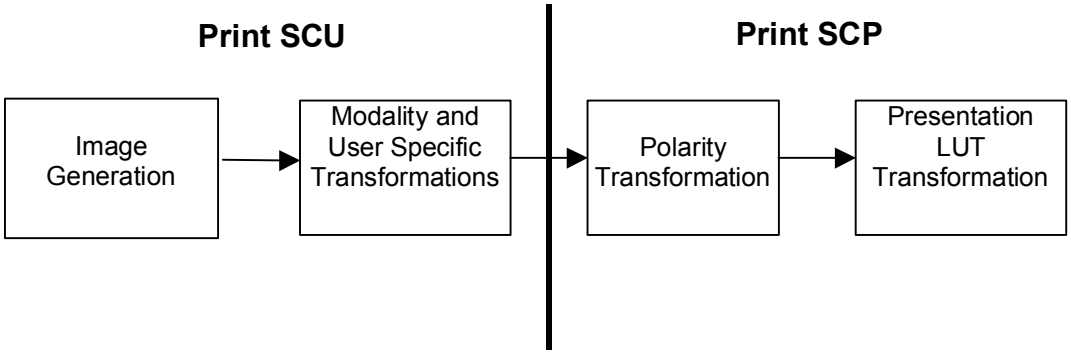

Figure H.2-2
PRINT MANAGEMENT DATA FLOW MODEL

H.2.1.2.1 Modality and User Specific Transformations

Examples of these transformations are Modality LUT, Mask Subtraction, and VOI LUT.

The Modality LUT transforms manufacturer dependent pixel values into pixel values which are meaningful for the modality and which are manufacturer independent.

The VOI LUT transforms the modality pixel values into pixel values which are meaningful for the user or the application. For example it selects of a range of pixel values to be optimized for display, such as soft tissue or bone windows in a CT image.

H.2.1.2.2 Polarity

Polarity specifies whether minimum input pixel values shall be displayed as black or white. If Polarity (2020,0020) is NORMAL then the pixels will be displayed as specified by Photometric Interpretation; if Polarity is REVERSE then the pixels will be displayed with the opposite polarity as specified by Photometric Interpretation.

Polarity (2020,0020) is an Attribute of the Image Box IOD.

H.2.1.2.3 Presentation LUT

The Presentation LUT transforms the polarity pixel values into Presentation Values (P-Values), which are meaningful for display of the images. P-Values are approximately related to human perceptual response. They are intended to facilitate consistent display with common input for both hardcopy and softcopy display devices and be independent of the specific class or characteristics of the display device. It is used to realize image display tailored for specific modalities, applications, and user preferences

In the Print Management Service Class, the Presentation LUT is part of the Presentation LUT IOD.

Hardcopy devices convert P-Values into optical density for printing. This conversion depends on desired image D-max and D-min. It also depends on expected viewing conditions such as lightbox intensity for transparency films. The conversion to printed density is specified in the Presentation LUT SOP Class.

If the modality desires to natively specify P-Values as its output, it can negotiate for support of the Presentation LUT, but specify a LUT that is an identity function. The identity function informs the display device that no further translation is necessary.

Note: Performing this translation in the printer prevents potential loss of precision (detail) that would occur if this translation were to be performed on many of the existing 8-bit modalities.

--`,,```,,,,````-`-`,,`,,`,`,,`---

Provided by IHS
No reproduction or networking permitted without license from IHS
Not for Resale

H.2.2 Print Management Service Class Structure

The Print Management Service Class Structure is shown in Figure H.2-3.

The Print Management SCU and Print Management SCP are peer DICOM Print Management Application Entities. The Application Entity of the Print Management SCP corresponds with one or more hard copy printers. If the SCP Application Entity corresponds with multiple printers then the SCP Application Entity selects for each Print Job the printer where the Print Job will be printed.

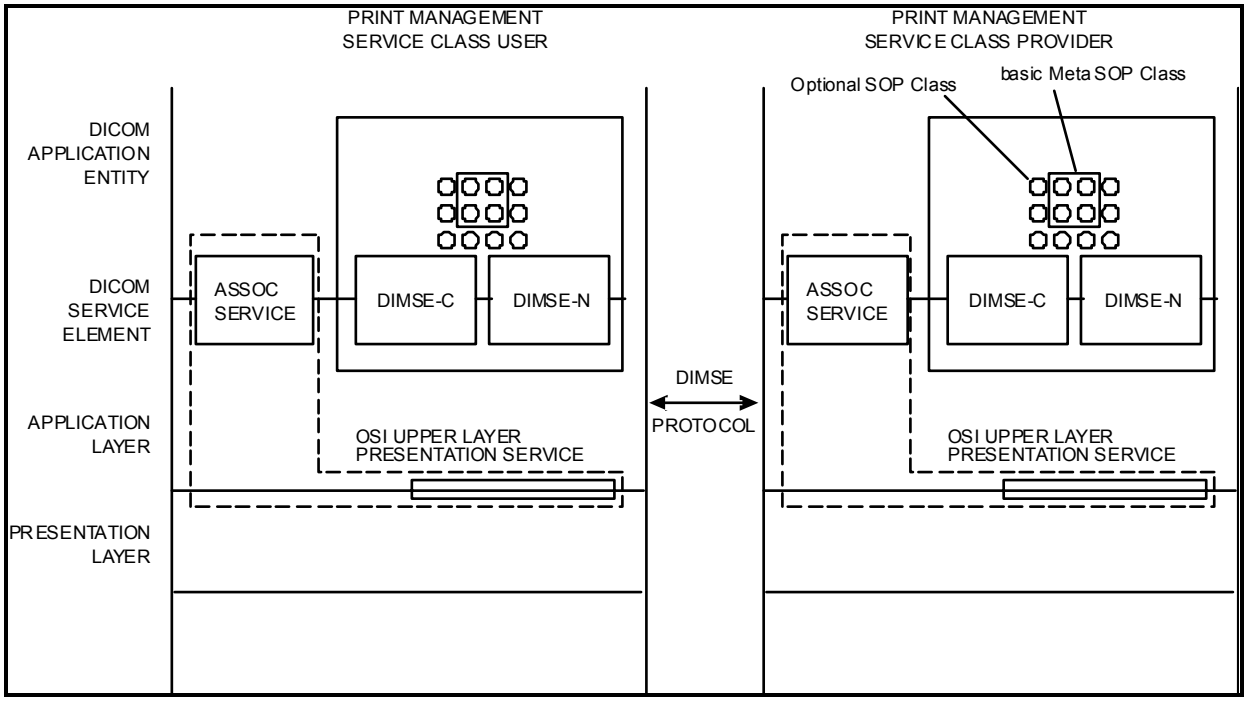

Figure H.2-3
PRINT MANAGEMENT SERVICE CLASS STRUCTURE

The Print Management SCU and Print Management SCP establish an Association by using the Association Services of the OSI Upper Layer Service. During Association establishment, the DICOM Print Management Application Entities negotiate the supported SOP Classes. The negotiation procedure is defined in Section H.5.

Figure H.2-4 shows alternative configurations for printing images and image related data from one host to multiple printers.

— Configuration 1: one SCU Application Entity corresponds with the host and one SCP Application Entity corresponds with multiple printers. The SCU has no control over the print parameters of each printer and over the print destination of the Print Job.

— Configuration 2: one SCU Application Entity corresponds with the host and one Application Entity SCP corresponds with each printer. The SCU has explicit control over the print parameters of each printer and over the print destination of the Print Job. Each SCP Application Entity has one Association with the SCU Application Entity and is identified by its Application Entity title.

Provided by IHS
No reproduction or networking permitted without license from IHS
Not for Resale

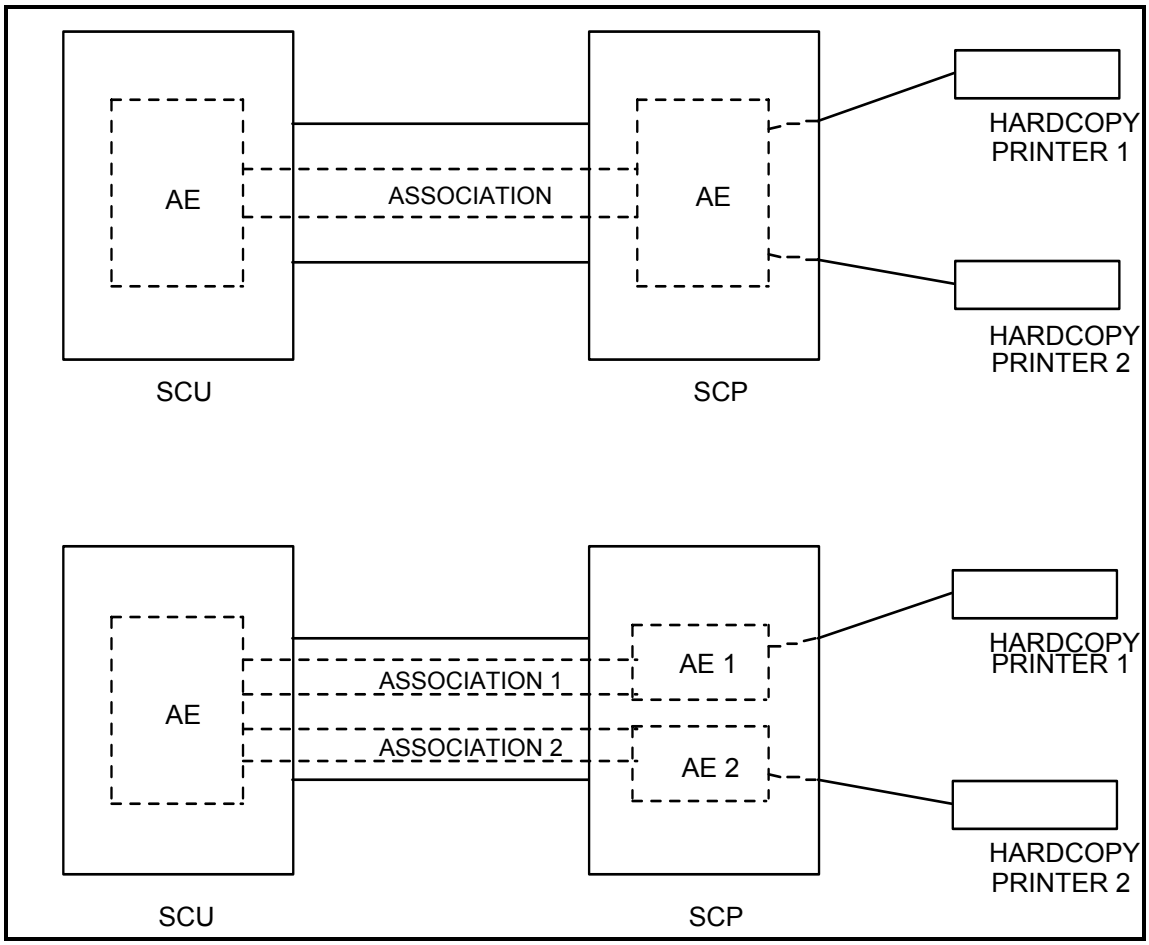

Figure H.2-4
CONFIGURATIONS FOR PRINTING ON MULTIPLE PRINTERS

H.2.3 Print Management SOP Classes

The Print Management SCU controls the Print Process by manipulating the Print Management SOP Classes by means of the DIMSE Services. The Print Management SOP Classes are managed by the Print Management SCP.

The Print Management SOP Classes are classified as follows:

- Content related SOP Classes: these SOP Classes are an abstraction of the contents of a film (e.g., pixel data, text string). The content related SOP Classes correspond with the Image related SOP Classes, which are described in Section H.4 of this Part.
- Presentation related SOP Classes: these SOP Classes are an abstraction of the presentation of a film (e.g., layout information) and are defined by Normalized IODs and Normalized DIMSE-N Services. The presentation related SOP Classes are defined in Section H.4 of this Part.
- Printer related SOP Classes: these SOP Classes are an abstraction of the printer configuration and status and are defined by Normalized IODs. The Printer SOP Class is defined in Section H.4 of this Part.

Provided by IHS
No reproduction or networking permitted without license from IHS
Not for Resale

H.2.4 Usage Specifications

The building blocks of SOP Classes are Modules and DIMSE Services. The Modules contain related Attributes, which are Mandatory(M) or Optional (U). The usage may be different for the SCU and SCP. The usage is specified as a pair of letters: the former indicating the SCU usage, the latter indicating the SCP usage.

DIMSE Services may be Mandatory (M) or Optional (U) as specified in Section 5.4 of this Part.

The meaning and behavior of the usage specification for Attributes for the Print Management Service Class are:

M/M The SCU shall provide a value for the Attribute. If the SCU does not supply a value, the SCP shall return a Failure status ("Missing Attribute," code 0120H). The SCP shall support at least one value of the Attribute. If the SCP does not support the value specified by the SCU, it shall return a Failure status ("Invalid Attribute Value," code 0106H).

-/M The SCU's usage of the Attribute is undefined. The SCP shall support at least one value of the Attribute.

U/M The SCU may provide a value for the Attribute. If the SCP does not support the value specified by the SCU, it shall return either a Failure status ("Invalid Attribute Value", code 0106H) or return a Warning status ("Attribute Value Out of Range", code 0116H). In the case of Warning status, the SCP will apply the default value as defined in the SCP Conformance Statement.

U/U The SCU may provide a value for the Attribute. If the SCP does not support the value specified by the SCU, but does support the Attribute, it shall return either a Failure status ("Invalid Attribute Value", code 0106H) or a Warning status ("Attribute Value out of Range, code 0116H.). In the case of Warning status, the SCP will apply the default value as defined in the SCP Conformance Statement.

If the SCP does not support the Attribute specified by the SCU, it shall return either a Failure status ("No Such Attribute", code 0105H) or return a Warning status ("Attribute List Error", code 0107H.)). In the case of Warning status, the behavior of the SCP is defined in the SCP Conformance Statement.

If the usage type designation is modified by a "C" (e.g., MC/M) the specification stated above shall be modified to include the requirement that the Attribute shall be supported if the specified condition is met.

H.2.5 Status Code Categories

For every operation requested on a SOP class of the print management service class, a status code will be returned. These status codes are grouped into success, warning or failure categories.

Note: These status codes categories are defined in PS 3.7:

Success – indicates that the SCP performed the requested operation as requested.

Warning – indicates that the SCP has received the request and will process it. However, immediate processing of the request, or processing in the way specified by the SCU, may not be possible. The SCP expects to be able to complete the request without further action by the SCU across the DICOM interface. The exact behavior of the SCP is described in the Conformance Statement.

Failure – indicates that the SCP is unable to perform the request. The request will not be processed unless it is repeated by the SCU at a later time. The exact behavior of the SCP is described in the Conformance Statement.

Provided by IHS
No reproduction or networking permitted without license from IHS Not for Resale

H.3 PRINT MANAGEMENT CONFORMANCE

H.3.1 Scope

Print Management conformance is defined in terms of supported Meta SOP Classes, which correspond with the mandatory functionality, and of supported optional SOP Classes, which correspond with additional functionality.

A Meta SOP Class corresponds with a pre-defined group of SOP Classes. The following Print Management Meta SOP Classes are defined:

- Basic Grayscale Print Management Meta SOP Class
- Basic Color Print Management Meta SOP Class
-

All SCUs and SCPs of the Print Management Service Class shall support at least one of the Basic Print Management Meta SOP Classes.

In addition the other Meta SOP Classes or optional SOP Classes may be supported.

The Meta SOP Class level negotiation is used to define a minimum set of print functions; the SOP Class level negotiation is used to define additional functions.

If multiple Meta SOP Classes and one or more optional SOP Classes are negotiated, the SCP shall support all the optional SOP Classes in conjunction with all the Meta SOP Classes.

At association setup, the negotiation process between the Print Management SCU and SCP shall occur for

- one or more of the Meta SOP Classes and zero or more of the optional SOP Classes specified in Section H.3.3.2; or
- one or more of the Printer, Print Job, and Printer Configuration Retrieval SOP Classes.

Note: It is possible for an SCP to support Associations for printing and to also support additional Associations for the sole purpose of exchanging status information about the printer.

H.3.2 Print Management Meta SOP Classes

H.3.2.1 Description

The Basic Print Management Meta SOP Classes correspond with the minimum functionality that an implementation of the Print Management Service Class shall support. The Basic Print Management Meta SOP Classes support the following mandatory features:

- preformatted grayscale images or preformatted color images; preformatted images are images where annotation, graphics, overlays are burned in
- pre-defined film layouts (image display formats)
- basic presentation parameters on film session, film box and image box level
- basic device management

The optional SOP Classes described in Section H.3.3 may be used with the Basic Print Management Meta SOP Classes.

The following features are optional for SCUs and SCPs:

- Film box annotation
- Presentation LUT

Provided by IHS
No reproduction or networking permitted without license from IHS
Not for Resale

H.3.2.2 Meta SOP Class Definitions

H.3.2.2.1 Basic Grayscale Print Management Meta SOP Class

The Meta SOP Class is defined by the following set of supported SOP Classes.

SOP Class Name	Reference	Usage SCU/SCP
Basic Film Session SOP Class	H.4.1	M/M
Basic Film Box SOP Class	H.4.2	M/M
Basic Grayscale Image Box SOP Class	H.4.3.1	M/M
Printer SOP Class	H.4.6	M/M

Note: The image pixel data are part of the Basic Grayscale Image Box SOP Class

The meaning of the Usage SCU/SCP is described in Section H.2.4.

The Basic Grayscale Print Management Meta SOP Class UID has the value "1.2.840.10008.5.1.1.9".

H.3.2.2.2 Basic Color Print Management Meta SOP Class

The Meta SOP Class is defined by the following set of supported SOP Classes.

SOP Class Name	Reference	Usage SCU/SCP
Basic Film Session SOP Class	H.4.1	M/M
Basic Film Box SOP Class	H.4.2	M/M
Basic Color Image Box SOP Class	H.4.3.2	M/M
Printer SOP Class	H.4.6	M/M

Note: The image pixel data are part of the Basic Color Image Box SOP Class

The meaning of the Usage SCU/SCP is described in Section H.2.4.

The Basic Color Print Management Meta SOP Class UID has the value "1.2.840.10008.5.1.1.18".

H.3.2.2.3 Referenced Grayscale Print Management Meta SOP Class (Retired)

This section was previously defined in DICOM. It is now retired. See PS 3.4-1998.

H.3.2.2.4 Referenced Color Print Management Meta SOP Class (Retired)

This section was previously defined in DICOM. It is now retired. See PS 3.4-1998.

H.3.2.2.5 Pull Stored Print Management Meta SOP Class (Retired)

This section was previously defined in DICOM. It is now retired. See PS 3.4-2004.

H.3.3 Optional SOP Classes

H.3.3.1 Description

The optional SOP Classes address functionality beyond that of the Print Management Meta SOP Classes. One or more optional SOP Classes may be used in addition to the Print Management Meta SOP Classes.

The following functionality is supported by the optional SOP Classes:

Provided by IHS
No reproduction or networking permitted without license from IHS
Not for Resale

- annotation (text associated with a sheet of film)
- tracking the printing of the print session
- retrieval of printer configuration information
- Presentation LUTs

Use of these optional SOP Classes allows an SCU to provide information to be printed with or on an image without burning the information into the image pixels. If these optional SOP Classes are not supported by both the SCU and SCP, then only the information burnt in to the image pixels before they are sent to the SCP will be printed. If the optional SOP Classes are not supported, the SCU is responsible for burning all expected text or graphics into the image pixels.

H.3.3.2 List of Optional SOP Classes

The following optional SOP Classes may be used in conjunction with the Basic Print Management Meta SOP Classes specified in Section H.3.2.2.

SOP Class Name	Reference	Usage SCU/SCP
Basic Annotation Box SOP Class	H.4.4	U/U
Print Job SOP Class	H.4.5	U/U
Presentation LUT SOP Class	H.4.9	U/U
Printer Configuration Retrieval SOP Class	H.4.11	U/U

Note: Negotiation of the Presentation LUT SOP Class does not imply any behavior in the SCP. Behavior is explicit when the Presentation LUT SOP Class is created and referenced at either the Film Session, Film Box, or Image Box levels.

H.3.4 Conformance statement

The implementation Conformance Statement of these SOP Classes shall follow PS 3.2.

The SCU Conformance Statement shall specify the following items:

- maximum number of supported Associations at the same time
- list of supported SOP Classes and Meta SOP Classes
- for each of the supported SOP and Meta SOP Classes:
- list of supported optional SOP Class Attributes and DIMSE Service Elements
- for each supported Attribute (mandatory and optional Attribute), the valid range of values

The SCP Conformance Statement shall specify the following items:

- maximum number of supported Associations at the same time
- list of supported SOP Classes and Meta SOP Classes
- minimum and maximum number of printable pixel matrix per supported film size
- for each of the supported SOP Classes:
- list of supported optional SOP Class Attributes and DIMSE Service Elements
- for each supported Attribute (mandatory and optional Attribute):
- valid range of values

--`,,```,,,,````-`-`,,`,,`,`,,`---

Provided by IHS
No reproduction or networking permitted without license from IHS Not for Resale

- default value if no value is supplied by the SCU
- status code (Failure or Warning) if SCU supplies a value which is out of range
- for each supported DIMSE Service, the SCP behavior for all specific status codes
- description of each supported custom Image Display Format (2010,0010) e.g., position and dimensions of each composing image box, numbering scheme of the image positions
- description of each supported Annotation Display Format ID (2010,0030) e.g., position and dimensions of annotation box, font, number of characters
- description of each supported configuration table (e.g. identification, content)
- if the SCP supports N-ACTION for the Film Session SOP Class then the SCP shall specify the maximum number of collated films
- in the case of grayscale printers that print color images, the behavior of printing color images
- if cropping of images is supported, the algorithm for removing rows and columns from the image

H.4 PRINT MANAGEMENT SOP CLASS DEFINITIONS

H.4.1 Basic Film Session SOP Class

H.4.1.1 IOD Description

The Basic Film Session IOD describes the presentation parameters which are common for all the films of a film session (e.g. number of films, film destination)

The Basic Film Session SOP Instance refers to one or more Basic Film Box SOP Instances.

H.4.1.2 DIMSE Service Group

The DIMSE Services applicable to the IOD are shown in Table H.4-1.

Table H.4-1
DIMSE SERVICE GROUP

DIMSE Service Element	Usage SCU/SCP
N-CREATE	M/M
N-SET	U/M
N-DELETE	U/M
N-ACTION	U/U

The meaning of the Usage SCU/SCP is described in Section H.2.4.

This Section describes the behavior of the DIMSE Services which are specific for this IOD. The general behavior of the DIMSE Services is specified in PS 3.7.

H.4.1.2.1 N-CREATE

The N-CREATE is used to create an instance of the Basic Film Session SOP Class.

H.4.1.2.1.1 Attributes

The Attribute list of the N-CREATE is defined as shown in Table H.4-2.

Provided by IHS
No reproduction or networking permitted without license from IHS
Not for Resale

Table H.4-2
N-CREATE ATTRIBUTE LIST

Attribute Name	Tag	Usage SCU/SCP
Specific Character Set	(0008,0005)	U/U
Number of Copies	(2000,0010)	U/M
Print Priority	(2000,0020)	U/M
Medium Type	(2000,0030)	U/M
Film Destination	(2000,0040)	U/M
Film Session Label	(2000,0050)	U/U
Memory Allocation	(2000,0060)	U/U
Owner ID	(2100,0160)	U/U

Notes: 1. The memory allocation Attribute allows the SCU to reserve sufficient memory to store the "working" film session hierarchy as well the "copied" film session hierarchy in the Print Job in order to prevent deadlock situations.

2. Owner ID (2100,0160) is a user option for the Basic Film Session.

The meaning of the Usage SCU/SCP is described in Section H.2.4.

Within the film session, the allocated memory is consumed as SOP Instances are created and is freed for reuse as SOP Instances are deleted. All the allocated memory shall be released following termination of the Association or deletion of the Film Session SOP Instance.

H.4.1.2.1.2 Status

The status values which are specific for this SOP Class are defined as follows.

Status	Meaning	Code
Success	Film session successfully created	0000
Warning	Memory allocation not supported	B600

Note: The status code "0106H" (Invalid Attribute Value) indicates that the requested memory allocation can not be provided; the status code "0213H" (Resource limitation) indicates that the requested allocation can temporarily not be provided.

H.4.1.2.1.3 Behavior

The SCU uses the N-CREATE to request the SCP to create a Basic Film Session SOP Instance. The SCU shall initialize Attributes of the SOP Class as specified in Section H.2.4.

The SCP shall create the SOP Instance and shall initialize Attributes of the SOP Class as specified in Section H.2.4.

The SCP shall return the status code of the requested SOP Instance creation. The meaning of success, warning, and failure status codes is defined in Section H.2.5.

The Basic Film Session SOP Instances shall be created before the Film Box SOP Instances are created.

At any time the SCU/SCP shall only support one Basic Film Session SOP Instance on an Association.

Provided by IHS
No reproduction or networking permitted without license from IHS
Not for Resale

Note: Multiple film sessions may be handled by establishing multiple Associations.

Terminating the Association will effectively perform an N-DELETE on an opened film session. See Note in Section H.4.1.2.3.2.

H.4.1.2.2 N-SET

The N-SET may be used to update an instance of the Basic Film Session SOP Class.

H.4.1.2.2.1 Attributes

All Attributes and usage in Table H.4-2 apply to N-SET.

H.4.1.2.2.2 Status

The status values which are specific for this SOP Class are defined in H.4.1.2.1.2.

H.4.1.2.2.3 Behavior

The SCU uses the N-SET to request the SCP to update a Basic Film Session SOP Instance. The SCU shall specify the SOP Instance UID to be updated and shall specify the list of Attributes for which the Attribute Values are to be set.

The SCP shall set new values for the specified Attributes of the specified SOP Instance.

The SCP shall return the status code of the requested SOP Instance update. The meaning of success, warning, and failure status codes is defined in Section H.2.5

H.4.1.2.3 N-DELETE

The N-DELETE is used to delete the complete Basic Film Session SOP Instance hierarchy. As a result, all references to Image SOP Instances within the film session are deleted.

The Basic Film Session SOP Instance hierarchy consists of one Basic Film Session SOP Instance, one or more Basic Film Box SOP Instances, one or more Image Box SOP Instances, zero or more Basic Annotation Box SOP Instances, zero or more Presentation LUT SOP Instances, and zero or more Basic Print Image Overlay Box SOP instances.

Note: The Basic Film Session SOP Instance hierarchy can be visualized as a reversed tree with the Basic Film Session SOP Instance as the root and the Image Box SOP Instances as the leaves.

H.4.1.2.3.1 Status

There are no specific status codes.

H.4.1.2.3.2 Behavior

The SCU uses the N-DELETE to request the SCP to delete the Basic Film Session SOP Instance hierarchy. The SCU shall specify in the N-DELETE request primitive of the SOP Instance UID of the Basic Film Session (root).

The SCP shall delete the specified SOP Instance hierarchy.

The SCP shall not delete SOP Instances in the hierarchy as long as there are outstanding references to these SOP Instances

Note: It is beyond the scope of the Standard to specify when the SCP actually deletes SOP Instances with outstanding references.

The SCP shall return the status code of the requested SOP Instance deletion. The meaning of success, warning, and failure status codes is defined in Section H.2.5.

Provided by IHS
No reproduction or networking permitted without license from IHS Not for Resale

H.4.1.2.4 N-ACTION

The N-ACTION is used to print the film session; i.e. to print all the films which belong to the film session.

If multiple copies of the film session have been requested, the SCP shall collate the copies. This means that if two copies of four films has been specified, the printed sequence is 12341234.

H.4.1.2.4.1 Attributes

The arguments of the N-ACTION are defined in Table H.4-3.

The Action Reply argument is encoded as a DICOM Data Set. The Data Set only contains the Attribute Referenced Print Job Sequence (2100,0500) which includes the Referenced SOP Class UID (0008,1150) and the Referenced SOP Instance UID (0008,1155).

If the SCP supports the Print Job SOP Class, the Action Reply argument is contained in the N-ACTION response. Otherwise, the Action Reply is not contained in the N-ACTION response.

Table H.4-3
N-ACTION ARGUMENTS

Action Type Name	Action Type ID	Attribute	Tag	Usage SCU/SCP
Print	1	Referenced Print Job Sequence	(2100,0500)	-/MC Required if Print Job SOP is supported
		>Referenced SOP Class UID	(0008,1150)	-/MC Required if Referenced Print Job Sequence (2100,0500) is present
		>Referenced SOP Instance UID	(0008,1155)	-/MC Required if Referenced Print Job Sequence (2100,0500) is present

H.4.1.2.4.2 Status

The status values which are specific for this SOP Class are defined in Table H.4-4.

Table H.4-4
SOP CLASS STATUS VALUES

Status	Meaning	Code
Success	Film belonging to the film session are accepted for printing; if supported, the Print Job SOP Instance is created	0000
Warning	Film session printing (collation) is not supported	B601
	Film Session SOP Instance hierarchy does not contain Image Box SOP Instances (empty page)	B602
	Image size is larger than image box size, the image has been demagnified.	B604
	Image size is larger than the Image Box size. The Image has been cropped to fit.	B609
	Image size or Combined Print Image size is larger than the Image Box size. Image or Combined Print Image has been decimated to	B60A

--`,,```,,,,````-`-`,,`,,`,`,,`---

Provided by IHS
No reproduction or networking permitted without license from IHS Not for Resale

	fit.	
Failure	Film Session SOP Instance hierarchy does not contain Film Box SOP Instances	C600
	Unable to create Print Job SOP Instance; print queue is full	C601
	Image size is larger than image box size	C603
	Combined Print Image size is larger than the Image Box size	C613

Note: Previous versions of the DICOM Standard defined the status code of C604. This code was specified for the case of an image position collision. Since image position collision is not a possible state, the code has been retired.

H.4.1.2.4.3 Behavior

The SCU uses the N-ACTION to request the SCP to print all the films belonging to the identified film session.

The SCP shall make a copy of the "working" Basic Film Session SOP Instance hierarchy, which contains all the information to control the Print Process. Hence the SCU may further update the "working" SOP Instance hierarchy without affecting the result of previous print requests. The execution of the Print Process is monitored by the Print Job SOP Instance (if supported by the SCP) and the Printer SOP Class.

If the SCP supports the Print Job SOP Class then the SCP shall create a Print Job SOP Instance, which contains the copy of the "working" Basic Film Session SOP Instance hierarchy and shall return the Print Job SOP Class/Instance UID pair in the Attribute Referenced Print Job Sequence of the Action Reply argument.

Note: If the SCP supports the Print Job SOP Class, it creates a single Print Job for all the films of the film session.

The SCP shall return the status code of the requested operation. The meaning of success, warning, and failure status codes is defined in Section H.2.5.

The N-ACTION shall be issued only if the Basic Film Session SOP Instance hierarchy contains at least one Film Box SOP Instance.

H.4.1.3 SOP Class Definition and UID

The Basic Film Session SOP Class UID shall have the value "1.2.840.10008.5.1.1.1".

H.4.2 Basic Film Box SOP Class

H.4.2.1 IOD Description

The Basic Film Box IOD is an abstraction of the presentation of one film of the film session. The Basic Film Box IOD describes the presentation parameters which are common for all images on a given sheet of film.

The Basic Film Box SOP Instance refers to one or more Image Box SOP Instances, zero or more film related Annotation Box SOP Instances, and zero or one Presentation LUT SOP Instance.

H.4.2.2 DIMSE Service Group

Table H.4-5 shows DIMSE Services applicable to the IOD.

Table H.4-5
DIMSE SERVICE GROUP

DIMSE Service Element	Usage SCU/SCP

Provided by IHS
No reproduction or networking permitted without license from IHS
Not for Resale

N-CREATE	M/M
N-ACTION	M/M
N-DELETE	U/M
N-SET	U/U

The meaning of the Usage SCU/SCP is described in Section H.2.4.

This Section describes the behavior of the DIMSE Services which are specific for this IOD. The general behavior of the DIMSE Services is specified in PS 3.7.

H.4.2.2.1 N-CREATE

The N-CREATE is used to create an instance of the Basic Film Box SOP Class.

H.4.2.2.1.1 Attributes

The Attribute list of the N-CREATE is shown in Table H.4-6.

Table H.4-6
N-CREATE ATTRIBUTE LIST

Attribute Name	Tag	Usage SCU/SCP
Image Display Format	(2010,0010)	M/M
Referenced Film Session Sequence	(2010,0500)	M/M
>Referenced SOP Class UID	(0008,1150)	M/M
>Referenced SOP Instance UID	(0008,1155)	M/M
Referenced Image Box Sequence	(2010,0510)	-/M
>Referenced SOP Class UID	(0008,1150)	-/M
>Referenced SOP Instance UID	(0008,1155)	-/M
Referenced Basic Annotation Box Sequence	(2010,0520)	-/MC (Required if optional Annotation SOP was negotiated)
>Referenced SOP Class UID	(0008,1150)	-/MC (Required if sequence is present)
>Referenced SOP Instance UID	(0008,1155)	-/MC (Required if sequence is present)
Film Orientation	(2010,0040)	U/M
Film Size ID	(2010,0050)	U/M
Magnification Type	(2010,0060)	U/M
Max Density	(2010,0130)	U/M
Configuration Information	(2010,0150)	U/M
Referenced Presentation LUT Sequence	(2050,0500)	U/MC (Required if Presentation LUT is supported)
>Referenced SOP Class UID	(0008,1150)	U/MC (Required if sequence is present)

--`,,```,,,,````-`-,,`,,`,`,,`---

Provided by IHS
No reproduction or networking permitted without license from IHS
Not for Resale

>Referenced SOP Instance UID	(0008,1155)	U/MC) (Required if sequence is present
Annotation Display Format ID	(2010,0030)	U/U
Smoothing Type	(2010,0080)	U/U
Border Density	(2010,0100)	U/U
Empty Image Density	(2010,0110)	U/U
Min Density	(2010,0120)	U/U
Trim	(2010,0140)	U/U
Illumination	(2010,015E)	U/MC (Required if Presentation LUT is supported)
Reflected Ambient Light	(2010,0160)	U/MC (Required if Presentation LUT is supported)
Requested Resolution ID	(2020,0050)	U/U

The meaning of the Usage SCU/SCP is described in Section H.2.4.

If the Illumination (2010,015E) and Reflected Ambient Light (2010,0160) values, respectively termed L_0 and L_a, are not created, the following default values are recommended:

For transmissive film: $L_0 = 2000$ cd/m^2.
$L_a = 10$ cd/m^2.

For reflective media: $L_0 = 150$ cd/m^2.

H.4.2.2.1.2 Status

The status values which are specific for this SOP Class are defined as follows:

Status	Meaning	Code
Success	Film Box successfully created	0000
Warning	Requested Min Density or Max Density outside of printer's operating range. The printer will use its respective minimum or maximum density value instead.	B605
Failure	There is an existing Film Box that has not been printed and N-ACTION at the Film Session level is not supported. A new Film Box will not be created when a previous Film Box has not been printed.	C616

H.4.2.2.1.3 Behavior

The SCU uses the N-CREATE to request the SCP to create a Basic Film Box SOP Instance. The SCU shall initialize Attributes of the SOP Class as specified in Section H.2.4.

The SCP shall create the SOP Instance and shall initialize Attributes of the SOP Class as specified in Section H.2.4.

Provided by IHS
No reproduction or networking permitted without license from IHS
Not for Resale

Note: If there exists a Film Box SOP Instance that has not been printed and the SCP does not support N-ACTION on the Film Session, then the SCP should fail the N-CREATE of the new SOP Instance.

Upon the creation of the Basic Film Box SOP Instance, the SCP shall append the SOP Class/Instance UID pair of the created Basic Film Box SOP Instance to the Attribute Referenced Film Box Sequence (2000,0500) of the parent Basic Film Session SOP Instance to link the Basic Film Box SOP Instance to the Basic Film Session SOP Instance.

The SCP shall create Image Box SOP Instances of the appropriate Image Box SOP Class for each image box as defined by the Attribute Image Display Format (2010,0010). The SOP Class of the created Image Box SOP Instance depends on the Meta SOP Class context. For example the Grayscale Image Box SOP Class is related to the Basic Grayscale Print Management Meta SOP Class. The Meta SOP Class context is conveyed by the Presentation Context ID that corresponds with the Meta SOP Class and is defined at Association setup.

The SCP shall append the SOP Class/Instance UID pair of the created Image Box SOP Instance to the Referenced Image Box Sequence Attribute of the parent Basic Film Box SOP Instance to link each Image Box SOP Instance to the Basic Film Box SOP Instance. The SCP returns the list of Image Box SOP Class/Instance UID pairs in the Attribute Referenced Image Box Sequence (2010,0510) of the N-CREATE response message.

If supported, the SCP shall create Basic Annotation Box SOP Instances for each Annotation Box defined by the Attribute Annotation Display Format ID and shall append the SOP Class/Instance UID pair of the created Basic Annotation Box SOP Instance to the Referenced Annotation Box Sequence Attribute of the parent Basic Film Box SOP Instance to link each Basic Annotation Box SOP Instance to the Basic Film Box SOP Instance. The SCP returns the list of Basic Annotation Box SOP Class/Instance UID pairs in the Attribute Referenced Annotation Box Sequence of the N-CREATE response message. The Annotation Boxes shall support the same character sets as the Basic Film Box.

The character set supported by the Film Box shall be the same as the character set of the Basic Film Session.

The SCP shall return the status code of the requested SOP Instance creation. The meaning of success, warning, and failure status codes is defined in Section H.2.5.

H.4.2.2.2 N-SET

The N-SET may be used to update the last created instance of the Basic Film Box SOP Class.

H.4.2.2.2.1 Attributes

The Attributes which may be updated are shown in Table H.4-7.

Table H.4-7
N-SET ATTRIBUTES

Attribute Name	Tag	Usage SCU/SCP
Magnification Type	(2010,0060)	U/M
Max Density	(2010,0130)	U/M
Configuration Information	(2010,0150)	U/M
Referenced Presentation LUT Sequence	(2050,0500)	U/MC (Required if Presentation LUT is supported)
>Referenced SOP Class UID	(0008,1150)	U/MC (Required if sequence is present)

Provided by IHS
No reproduction or networking permitted without license from IHS
Not for Resale

>Referenced SOP Instance UID	(0008,1155)	U/MC) (Required if sequence is present
Smoothing Type	(2010,0080)	U/U
Border Density	(2010,0100)	U/U
Empty Image Density	(2010,0110)	U/U
Min Density	(2010,0120)	U/U
Trim	(2010,0140)	U/U
Illumination	(2010,015E)	U/MC (Required if Presentation LUT is supported)
Reflected Ambient Light	(2010,0160)	U/MC (Required if Presentation LUT is supported)

The meaning of the Usage SCU/SCP is described in Section H.2.4.

H.4.2.2.2.2 Status

The status values which are specific for this SOP Class are defined in H.4.2.2.1.2.

H.4.2.2.2.3 Behavior

The SCU uses the N-SET to request the SCP to update a Basic Film Box SOP Instance. The SCU shall only specify the SOP Instance UID of the last created Basic Film Box SOP Instance in the N-SET request primitive, and shall specify the list of Attributes for which the Attribute Values are to be set.

The SCP shall set new values for the specified Attributes of the specified SOP Instance.

The SCP shall return the status code of the requested SOP Instance update. The meaning of success, warning, and failure status codes is defined in Section H.2.5.

H.4.2.2.3 N-DELETE

The N-DELETE is used to delete the last created Basic Film Box SOP Instance hierarchy. As a result all the information describing the last film is deleted.

The Basic Film Box SOP Instance hierarchy consists of one Basic Film Box SOP Instance, one or more Image Box SOP Instances, zero or more Basic Annotation Box SOP Instances, zero or more Presentation LUT SOP Instances, and zero or more Basic Print Image Overlay Box SOP instances.

Note: There is no provision in the DICOM Standard to delete previously created Film Box SOP Instances.

H.4.2.2.3.1 Behavior

The SCU uses the N-DELETE to request the SCP to delete the Basic Film Box SOP Instance hierarchy. The SCU shall specify in the N-DELETE request primitive the SOP Instance UID of the last created Basic Film Box (root).

The SCP shall delete the specified SOP Instance hierarchy and shall remove the UID of the deleted Basic Film Box SOP Instance from the list of SOP Instance UIDs of the Film Box UIDs Attribute of the parent Basic Film Session SOP Instance.

Provided by IHS
No reproduction or networking permitted without license from IHS
Not for Resale

The SCP shall return the status code of the requested SOP Instance hierarchy deletion. The meaning of success, warning, and failure status codes is defined in Section H.2.5.

The SCP shall not delete SOP Instances in the hierarchy as long as there are outstanding references to these SOP Instances

Note: It is beyond the scope of the Standard to specify when the SCP actually deletes the Image SOP Instances with outstanding references.

H.4.2.2.4 N-ACTION

The N-ACTION is used to print one or more copies of the last created instance of the Film Box.

H.4.2.2.4.1 Attributes

The arguments of the N-ACTION are defined as shown in Table H.4-8.

The Action Reply argument is encoded as a DICOM Data Set. The Data Set only contains the Attribute Referenced Print Job Sequence (2100,0500) which includes the Referenced SOP Class UID (0008,1150) and the Referenced SOP Instance UID (0008,1155).

If the SCP supports the Print Job SOP Class, the Action Reply argument is contained in the N-ACTION response. Otherwise, the Action Reply is not contained in the N-ACTION response.

Table H.4-8
N-ACTION ARGUMENTS

Action Type Name	Action Type ID	Attribute	Tag	Usage SCU/SCP
Print	1	Referenced Print Job Sequence	(2100,0500)	-/MC Required if Print Job SOP is supported
		>Referenced SOP Class UID	(0008,1150)	-/MC Required if Referenced Print Job Sequence (2100,0500) is present
		>Referenced SOP Instance UID	(0008,1155)	-/MC Required if Referenced Print Job Sequence (2100,0500) is present

H.4.2.2.4.2 Status

The status values which are specific for this SOP Class are defined as shown in Table H.4-9.

Table H.4-9
STATUS VALUES

Status	Meaning	Code
Success	Film accepted for printing; if supported, the Print Job SOP Instance is created	0000
Warning	Film Box SOP Instance hierarchy does not contain Image Box SOP Instances (empty page)	B603
	Image size is larger than image box size, the image has been demagnified.	B604
	Image size is larger than the Image Box size. The Image has been cropped to fit.	B609

--`,,```,,,,````-`-`,,`,,`,`,,`---

Provided by IHS
No reproduction or networking permitted without license from IHS Not for Resale

	Image size or Combined Print Image size is larger than the Image Box size. Image or Combined Print Image has been decimated to fit.	B60A
Failure	Unable to create Print Job SOP Instance; print queue is full	C602
	Image size is larger than image box size	C603
	Combined Print Image size is larger than the Image Box size	C613

Note: Previous versions of the DICOM Standard defined the status code of C604. This code was specified for the case of an image position collision. Since image position collision is not a possible state, the code has been retired.

H.4.2.2.4.3 Behavior

The SCU uses the N-ACTION to request the SCP to print one or more copies of a single film of the film session. The SCU shall only specify the SOP Instance UID of the last created Basic Film Box SOP Instance in the N-ACTION request primitive.

The SCP shall make a copy of the "working" Basic Film Session SOP Instance and the "working" Basic Film Box SOP Instance hierarchy, which contains all the information to control the Print Process. Hence the SCU may further update the "working" SOP Instances without affecting the result of previous print requests. The execution of the Print Process is monitored by the Print Job SOP Class (if supported by the SCP) and the Printer SOP Class.

If the SCP supports the Print Job SOP Class then the SCP shall create a Print Job SOP Instance, which contains the copy of the "working" Basic Film Session SOP Instance hierarchy and shall return the Print Job SOP Class/Instance UID pair in the Attribute Referenced Print Job Sequence of the Action Reply argument.

The SCP shall return the status code of the requested operation. The meaning of success, warning, and failure status codes is defined in Section H.2.5.

H.4.2.3 SOP Class Definition and UID

The Basic Film Box SOP Class UID shall have the value "1.2.840.10008.5.1.1.2".

H.4.3 Image Box SOP Classes

H.4.3.1 Basic Grayscale Image Box SOP Class

H.4.3.1.1 IOD description

The Basic Image Box IOD is an abstraction of the presentation of an image and image related data in the image area of a film. The Basic Image Box IOD describes the presentation parameters and image pixel data which apply to a single image of a sheet of film.

The Basic Grayscale Image Box SOP Instance is created by the SCP at the time the Basic Film Box SOP Instance is created, based on the value of the Basic Film Box Attribute Image Display Format (2010,0010).

The Basic Grayscale Image Box SOP Instance refers to zero or one Image Overlay Box SOP Instance and zero or one Presentation LUT SOP Instance.

H.4.3.1.2 DIMSE Service Group

The DIMSE Services applicable to the IOD are shown below.

DIMSE Service Element	Usage SCU/SCP
N-SET	M/M

Provided by IHS
No reproduction or networking permitted without license from IHS
Not for Resale

The meaning of the Usage SCU/SCP is described in Section H.2.4.

Note: There is no N-CREATE because Instances of the Basic Grayscale Image Box SOP Class are created by the SCP as a result of the N-CREATE of the Film Box SOP Instance.

This Section describes the behavior of the DIMSE Services which are specific for this IOD. The general behavior of the DIMSE Services is specified in PS 3.7.

H.4.3.1.2.1 N-SET

The N-SET may be used to update an instance of the Basic Grayscale Image Box SOP Class.

H.4.3.1.2.1.1 Attributes

The Attributes which may be updated are shown in Table H.4-10.

Table H.4-10
N-SET ATTRIBUTES

Attribute Name	Tag	Usage SCU/SCP
Image Position	(2020,0010)	M/M
Basic Grayscale Image Sequence	(2020,0110)	M/M
>Samples Per Pixel	(0028,0002)	M/M
>Photometric Interpretation	(0028,0004)	M/M
>Rows	(0028,0010)	M/M
>Columns	(0028,0011)	M/M
>Pixel Aspect Ratio	(0028,0034)	MC/M (Required if the aspect ration is not 1\1))
>Bits Allocated	(0028,0100)	M/M
>Bits Stored	(0028,0101)	M/M
>High Bit	(0028,0102)	M/M
>Pixel Representation	(0028,0103)	M/M
>Pixel Data	(7FE0,0010)	M/M
Polarity	(2020,0020)	U/M
Magnification Type	(2010,0060)	U/U
Smoothing Type	(2010,0080)	U/U
Min Density	(2010,0120)	U/U
Max Density	(2010,0130)	U/U
Configuration Information	(2010,0150)	U/U
Requested Image Size	(2020,0030)	U/U
Requested Decimate/Crop Behavior	(2020,0040)	U/U
Referenced Presentation LUT Sequence	(2050,0500)	U/U
> Referenced SOP Class UID	(0008,1150)	U/U
> Referenced SOP Instance UID	(0008,1155)	U/U

The meaning of the Usage SCU/SCP is described in Section H.2.4.

Provided by IHS
No reproduction or networking permitted without license from IHS
Not for Resale

The values of Magnification Type (2010,0060) and Smoothing Type (2010,0080) of a particular image box override the values of Magnification Type and Smoothing Type of the film box.

Values for Referenced Presentation LUT Sequence override any Presentation LUT that may have been set at the Basic Film Box. Values for Min/Max Density override any Density values that may have been set at the Basic Film Box.

H.4.3.1.2.1.2 Status

The status values which are specific for this SOP Class are defined as follows.

Status	Meaning	Code
Success	Image successfully stored in Image Box	0000
Warning	Image size larger than image box size, the image has been demagnified.	B604
	Requested Min Density or Max Density outside of printer's operating range. The printer will use its respective minimum or maximum density value instead.	B605
	Image size is larger than the Image Box size. The Image has been cropped to fit.	B609
	Image size or Combined Print Image size is larger than the Image Box size. The Image or Combined Print Image has been decimated to fit.	B60A
Failure	Image size is larger than image box size	C603
	Insufficient memory in printer to store the image	C605
	Combined Print Image size is larger than the Image Box size	C613

H.4.3.1.2.1.3 Behavior

The SCU uses the N-SET to request the SCP to update a Basic Grayscale Image Box SOP Instance. The SCU shall only specify the SOP Instance UID of a Basic Grayscale Image Box belonging to the last created Film Box SOP Instance and shall specify the list of Attributes for which the Attribute Values are to be set.

To instruct the SCP to erase the image in the image position, the SCU shall set a zero length and no value in the Attribute Basic Grayscale Image Sequence (2020,0110).

The SCP shall set new values for the specified Attributes of the specified SOP Instance.

Note: The image in this N-SET supersedes any image previously set in the Image Box.

The SCP shall return the status code of the requested SOP Instance update. The meaning of success, warning, and failure status codes is defined in Section H.2.5.

If Requested Decimate/Crop Behavior (2020,0040) specifies DECIMATE, Magnification Type (2010,0060) specifies NONE, and the image is too large to fit the Image Box, the SCP shall fail the N-SET.

H.4.3.1.3 SOP Class Definition and UID

The Basic Grayscale Image Box SOP Class UID shall have the value "1.2.840.10008.5.1.1.4".

Provided by IHS
No reproduction or networking permitted without license from IHS Not for Resale

H.4.3.2 Basic Color Image Box SOP Class

H.4.3.2.1 IOD Description

The Basic Image Box IOD is an abstraction of the presentation of an image and image related data in the image area of a film. The Basic Image Box IOD describes the presentation parameters and image pixel data which apply to a single image of a sheet of film.

The Basic Color Image Box SOP Instance is created by the SCP at the time the Basic Film Box SOP Instance is created, based on the value of the Basic Film Box Attribute Image Display Format (2010,0010).

The Basic Color Image Box SOP Instance refers to zero or one Image Overlay Box SOP Instance.

H.4.3.2.2 DIMSE service group

The following DIMSE Services are applicable to the IOD.

DIMSE Service element	Usage SCU/SCP
N-SET	M/M

The meaning of the Usage SCU/SCP is described in Section H.2.4.

Note: There is no N-CREATE because Instances of the Basic Color Image Box SOP Class are created by the SCP as a result of the N-CREATE of the Film Box SOP Instance.

This Section describes the behavior of the DIMSE Services which are specific for this IOD. The general behavior of the DIMSE Services is specified in PS 3.7.

H.4.3.2.2.1 N-SET

The N-SET may be used to update an instance of the Basic Color Image Box SOP Class.

H.4.3.2.2.1.1 Attributes

The Attributes which may be updated are shown in Table H.4-11.

The meaning of the Usage SCU/SCP is described in Section H.2.4.

The values of Magnification Type (2010,0060) and Smoothing Type (2010,0080) of a particular image box override the values of Magnification Type and Smoothing Type of the film box.

Table H.4-11
N-SET ATTRIBUTES

Attribute Name	Tag	Usage SCU/SCP
Image Position	(2020,0010)	M/M
Basic Color Image Sequence	(2020,0111)	M/M
>Samples Per Pixel	(0028,0002)	M/M
>Photometric Interpretation	(0028,0004)	M/M
>Planar Configuration	(0028,0006)	M/M
>Rows	(0028,0010)	M/M
>Columns	(0028,0011)	M/M

Provided by IHS
No reproduction or networking permitted without license from IHS
Not for Resale

>Pixel Aspect Ratio	(0028,0034)	MC/M (Required if the aspect ration is not 1\1))
>Bits Allocated	(0028,0100)	M/M
>Bits Stored	(0028,0101)	M/M
>High Bit	(0028,0102)	M/M
>Pixel Representation	(0028,0103)	M/M
>Pixel Data	(7FE0,0010)	M/M
Polarity	(2020,0020)	U/M
Magnification Type	(2010,0060)	U/U
Smoothing Type	(2010,0080)	U/U
Requested Image Size	(2020,0030)	U/U
Requested Decimate/Crop Behavior	(2020,0040)	U/U

H.4.3.2.2.1.2 Status

The status values which are specific for this SOP Class are defined as follows.

Status	Meaning	Code
Warning	Image size larger than image box size, the image has been demagnified.	B604
	Image size is larger than the Image Box size. The Image has been cropped to fit.	B609
	Image size or Combined Print Image size is larger than the Image Box size. The Image or Combined Print Image has been decimated to fit.	B60A
Failure	Image size is larger than image box size	C603
	Insufficient memory in printer to store the image	C605
	Combined Print Image size is larger than the Image Box size	C613

H.4.3.2.2.1.3 Behavior

The SCU uses the N-SET to request the SCP to update a Basic Color Image Box SOP Instance. The SCU shall only specify the SOP Instance UID of a Basic Color Image Box belonging to the last created Film Box SOP Instance and shall specify the list of Attributes for which the Attribute Values are to be set.

To instruct the SCP to erase the image in the image position, the SCU shall set a zero length and no value in the Attribute Basic Color Image Sequence (2020,0111).

The SCP shall set new values for the specified Attributes of the specified SOP Instance.

Note: The image in this N-SET supersedes any image previously set in the Image Box.

The SCP shall return the status code of the requested SOP Instance update. The meaning of success, warning, and failure status codes is defined in Section H.2.5.

Provided by IHS
No reproduction or networking permitted without license from IHS
Not for Resale

If Requested Decimate/Crop Behavior (2020,0040) specifies DECIMATE, Magnification Type (2010,0060) specifies NONE, and the image is too large to fit the Image Box, the SCP shall fail the N-SET.

H.4.3.2.3 SOP Class Definition and UID

The Basic Color Image Box SOP Class UID shall have the value "1.2.840.10008.5.1.1.4.1".

H.4.3.3 Referenced Image Box SOP Class (Retired)

This section was previously defined in DICOM. It is now retired. See PS 3.4-1998.

H.4.4 Basic Annotation Box SOP Class

H.4.4.1 IOD Description

The Basic Annotation Box IOD is an abstraction of the presentation of an annotation (e.g. text string) on a film. The Basic Annotation Box IOD describes the most used text related presentation parameters.

The Basic Annotation Box SOP Instance is created by the SCP at the time the Basic Film Box SOP Instance is created, based on the value of the Attribute Annotation Display Format ID (2010,0030) of the Basic Film Box.

H.4.4.2 DIMSE Service Group

The DIMSE Services which are applicable to the IOD are shown below.

DIMSE Service Element	Usage SCU/SCP
N-SET	U/M

The meaning of the Usage SCU/SCP is described in Section H.2.4.

Note: There is no N-CREATE because the Instances of the Basic Annotation Box SOP Class are created by the Film Box SOP Instance.

This Section describes the behavior of the DIMSE Services which are specific for this IOD. The general behavior of the DIMSE Services is specified in PS 3.7.

H.4.4.2.1 N-SET

The N-SET is used to update the Basic Annotation Box SOP Instance.

H.4.4.2.1.1 Attributes

The Attributes which may be updated are shown in Table H.4-13.

Table H.4-13
N-SET ATTRIBUTES

Attribute name	Tag	Usage SCU/SCP
Annotation position	(2030,0010)	M/M
Text String	(2030,0020)	U/M

The meaning of the Usage SCU/SCP is described in Section H.2.4.

H.4.4.2.1.2 Status

There are no specific status codes.

Provided by IHS
No reproduction or networking permitted without license from IHS
Not for Resale

H.4.4.2.1.3 Behavior

The SCU uses the N-SET to request the SCP to update a Basic Annotation Box SOP Instance. The SCU shall only specify the SOP Instance UID of the Basic Annotation Box belonging to the last created Film Box SOP Instance in the N-SET request primitive, and shall specify the list of Attributes for which the Attribute Values are to be set. The SCU may erase the text string by setting a zero length value in the Attribute Text String (2030,0020).

The SCP shall set new values for the specified Attributes of the specified SOP Instance.

The SCP shall return the status code of the requested SOP Instance update. The meaning of success, warning, and failure status codes is defined in Section H.2.5.

H.4.4.3 SOP Class Definition and UID

The Basic Annotation Box SOP Class UID shall have the value “1.2.840.10008.5.1.1.15”.

H.4.5 Print Job SOP Class

H.4.5.1 IOD Description

The Print Job IOD is an abstraction of the Print Job transaction and is the basic information entity to monitor the execution of the Print Process. A Print Job contains one film or multiple films, all belonging to the same film session.

The Print Job SOP Class is created by N-ACTION operation of the Film Session SOP Class, Film Box SOP Class, or Pull Print Request SOP Class. The Print Job SOP Instance is deleted after the films are printed or after a failure condition.

H.4.5.2 DIMSE Service Group

The DIMSE Services which are applicable to the IOD are shown below.

DIMSE Service Element	Usage SCU/SCP
N-EVENT-REPORT	M/M
N-GET	U/M

The meaning of the Usage SCU/SCP is described in Section H.2.4.

This Section describes the behavior of the DIMSE Services which are specific for this IOD. The general behavior of the DIMSE Services is specified in PS 3.7.

H.4.5.2.1 N-EVENT-REPORT

The N-EVENT-REPORT is used to report execution status changes to the SCU in an asynchronous way.

Provided by IHS
No reproduction or networking permitted without license from IHS
Not for Resale

H.4.5.2.1.1 Attributes

The arguments of the N-EVENT-REPORT are defined as shown in Table H.4-14.

Note: The encoding of Notification Event Information is defined in PS 3.7.

Table H.4-14
NOTIFICATION EVENT INFORMATION

Event Type Name	Event Type ID	Attribute	Tag	Usage SCU/SCP
Pending	1	Execution Status Info	(2100,0030)	U/M
		Film Session Label	(2000,0050)	U/U
		Printer Name	(2110,0030)	U/U
Printing	2	Execution Status Info	(2100,0030)	U/M
		Film Session Label	(2000,0050)	U/U
		Printer Name	(2110,0030)	U/U
Done	3	Execution Status Info	(2100,0030)	U/M
		Film Session Label	(2000,0050)	U/U
		Printer Name	(2110,0030)	U/U
Failure	4	Execution Status Info	(2100,0030)	U/M
		Film Session Label	(2000,0050)	U/U
		Printer Name	(2110,0030)	U/U

H.4.5.2.1.2 Behavior

The SCP uses the N-EVENT-REPORT to inform the SCU about each execution change. The SCP shall only use the N-EVENT-REPORT within the context of the Association in which the Print Job SOP Instance was created.

Note: If SCU wants to monitor the complete execution process of a Print Job, then the SCU should only release the Association after the receipt of the event type Done or Failure.

The SCU shall return the confirmation from the N-EVENT-REPORT operation.

If the Event Type Name = Failure or Pending then the error/pending condition is stored in the Execution Status Info argument. The possible values of the Execution Status Info argument are defined in H.4.5.3.

If the Event Type Name = Failure or Done then the SCP shall delete the Print Job SOP Instance after receiving a confirmation from the SCU.

H.4.5.2.2 N-GET

The N-GET is used to retrieve an instance of the Print Job SOP Class.

Provided by IHS
No reproduction or networking permitted without license from IHS
Not for Resale

H.4.5.2.2.1 Attributes

The Attributes which may be retrieved are shown in Table H.4-15.

Table H.4-15
N-GET ATTRIBUTES

Attribute Name	Tag	Usage SCU/SCP
Execution Status	(2100,0020)	U/M
Execution Status Info	(2100,0030)	U/M
Print Priority	(2000,0020)	U/M
Creation Date	(2100,0040)	U/U
Creation Time	(2100,0050)	U/U
Printer Name	(2110,0030)	U/U
Originator	(2100,0070)	U/U

The meaning of the Usage SCU/SCP is described in Section H.2.4.

H.4.5.2.2.2 Behavior

The SCU uses the N-GET to request the SCP to get a Print Job SOP Instance. The SCU shall specify in the N-GET request primitive the UID of the SOP Instance to be retrieved.

The SCP shall return the values for the specified Attributes of the specified SOP Instance.

The SCP shall return the status code of the requested SOP Instance retrieval. The meaning of success, warning, and failure status codes is defined in Section H.2.5.

H.4.5.3 Execution Status Information

Status Information is defined in PS 3.3. Implementation specific warning and error codes shall be defined in the Conformance Statement.

H.4.5.4 SOP Class Definition and UID

The Print Job SOP Class UID shall have the value “1.2.840.10008.5.1.1.14”.

H.4.6 PRINTER SOP Class

H.4.6.1 IOD Description

The Printer IOD is an abstraction of the hard copy printer and is the basic Information Entity to monitor the status of the printer.

The Printer SOP Instance is created by the SCP during start-up of the hard copy printer and has a well-known SOP Instance UID.

H.4.6.2 DIMSE Service Group

The DIMSE Services which are applicable to the IOD are shown below.

DIMSE Service Element	Usage SCU/SCP
N-EVENT-REPORT	M/M
N-GET	U/M

The meaning of the Usage SCU/SCP is described in Section H.2.4.

Provided by IHS
No reproduction or networking permitted without license from IHS
Not for Resale

This Section describes the behavior of the DIMSE Services which are specific for this IOD. The general behavior of the DIMSE Services is specified in PS 3.7.

H.4.6.2.1 N-EVENT-REPORT

The N-EVENT-REPORT is used to report the changes of the printer status in an asynchronous way.

H.4.6.2.1.1 Attributes

The arguments of the N-EVENT-REPORT are defined as shown in Table H.4-16.

Note: The encoding of Notification Event Information is defined in PS 3.7.

Table H.4-16
NOTIFICATION EVENT INFORMATION

Event Type Name	Event Type ID	Attribute	Tag	Usage SCU/SCP
Normal	1			
Warning	2	Printer Status Info	(2110,0020)	U/M
		Film Destination	(2000,0040)	U/U
		Printer Name	(2110,0030)	U/U
Failure	3	Printer Status Info	(2110,0020)	U/M
		Film Destination	(2000,0040)	U/U
		Printer Name	(2110,0030)	U/U

H.4.6.2.1.2 Behavior

The SCP shall use the N-EVENT-REPORT to inform the SCU about each execution change. The SCP shall send the events to all SCUs with which the SCP has an Association that is using the printer for which the status changes.

The SCU shall return the confirmation of the N-EVENT-REPORT operation.

If the Event Type Name = Warning or Failure then the warning/failure condition is stored in the Printer Status Info argument. The possible values the Printer Status Info argument are defined in H.4.6.3.

H.4.6.2.2 N-GET

The N-GET is used to retrieve an instance of the Printer SOP Class.

H.4.6.2.2.1 Attributes

The Attributes which may be retrieved are shown in Table H.4-17.

Table H.4-17
N-GET ATTRIBUTES

Attribute name	Tag	Usage SCU/SCP
Printer Status	(2110,0010)	U/M
Printer Status Info	(2110,0020)	U/M
Printer Name	(2110,0030)	U/U

Provided by IHS
No reproduction or networking permitted without license from IHS
Not for Resale

Manufacturer	(0008,0070)	U/U
Manufacturer Model Name	(0008,1090)	U/U
Device Serial Number	(0018,1000)	U/U
Software Versions	(0018,1020)	U/U
Date Last Calibration	(0018,1200)	U/U
Last Calibration	(0018,1201)	U/U

The meaning of the Usage SCU/SCP is described in Section H.2.4.

H.4.6.2.2.2 Behavior

The SCU uses the N-GET to request the SCP to get a Printer SOP Instance. The SCU shall specify in the N-GET request primitive the UID of the SOP Instance to be retrieved.

The SCP shall return the values for the specified Attributes of the specified SOP Instance.

The SCP shall return the status code of the requested SOP Instance retrieval. The meaning of success, warning, and failure status codes is defined in Section H.2.5.

H.4.6.3 Printer Status Information

Status Information is defined in PS 3.3. Implementation specific warning and error codes shall be defined in the Conformance Statement.

H.4.6.4 SOP Class Definition and UID

The Printer SOP Class UID shall have the value “1.2.840.10008.5.1.1.16”.

H.4.6.5 Reserved Identifications

The well-known UID of the Printer SOP Instance shall have the value “1.2.840.10008.5.1.1.17”.

H.4.7 VOI LUT Box SOP Class (Retired)

This section was previously defined in DICOM. It is now retired. See PS 3.4-1998.

H.4.8 Image Overlay Box SOP Class (Retired)

This section was previously defined in DICOM. It is now retired. See PS 3.4-1998.

H.4.9. Presentation LUT SOP Class

H.4.9.1 Information Object Description

The Presentation LUT Information Object is an abstraction of a Presentation LUT (see Section H.2.1.1). The objective of the Presentation LUT is to realize image display tailored for specific modalities, applications, and user preferences. It is used to prepare image pixel data for display on devices that conform to the Grayscale Standard Display Function defined In PS 3.14.

Note: The density range to be printed, Min Density to Max Density, is specified at either the Film Box or the Image Box. As follows from the definition for Min Density and Max Density in PS 3.3, if the requested minimum density is lower than the minimum printer density, or the requested maximum density is greater than the maximum printer density, the printer will use its minimum or maximum density, respectively, when computing the standard response.

The output of the Presentation LUT is Presentation Values (P-Values). P-Values are approximately related to human perceptual response. They are intended to facilitate common input for both hardcopy and softcopy display devices. P-Values are intended to be independent of the specific class or characteristics of the display device.

Provided by IHS
No reproduction or networking permitted without license from IHS Not for Resale

The Presentation LUT is not intended to alter the appearance of the pixel values, as specified as specified by the Photometric Interpretation (0028,0004) and Polarity (2020,0020).

The Basic Film Box Information Object, the Basic Image Box Information Object and the Referenced Image Box Object reference the Presentation LUT.

If the Configuration Information Attribute (2010,0150) of the Basic Film Box IOD contains information similar to the Presentation LUT, then the Presentation LUT Attributes shall take precedence.

H.4.9.1.1 Mapping of P-Values to Optical Density

The mathematical definition of the Grayscale Standard Display Function and mapping of P-Values to optical density for reflective and transmissive printers is contained in PS 3.14.

H.4.9.2 DIMSE Service Group

The following DIMSE Services are applicable to the association related Presentation LUT Information Object:

DIMSE Service Element	Usage SCU/SCP
N-CREATE	M/M
N-DELETE	U/M

The meaning of the Usage SCU/SCP is described in section H.2.4.

This section describes the behavior of the DIMSE Services, which are specific for this Information Object. The general behavior of the DIMSE services is specified in Part 7 of this Standard.

H.4.9.2.1 N-CREATE

The N-CREATE Service Element is used to create an instance of the Presentation LUT SOP Class.

H.4.9.2.1.1 Attributes

The Attribute list of the N-CREATE Service Element is defined as shown in Table H.4-23.

Table H.4-23
N-CREATE ATTRIBUTE LIST

Attribute name	Tag	Usage SCU/SCP
Presentation LUT Sequence	(2050,0010)	MC/M (Required if Presentation LUT Shape (2050,0020) is not present. Not allowed otherwise.)
>LUT Descriptor	(0028,3002)	MC/M (Required if sequence is present. The first value (number of entries in the LUT) shall be equal to 256 if Bits Stored = 8 4096 if Bits Stored = 12. The second value shall be equal to 0. The third value (number of bits for each LUT entry) shall be 10-16.)

--`,,```,,,,````-`-`,,`,,`,`,,`---

Provided by IHS
No reproduction or networking permitted without license from IHS
Not for Resale

		See the definition is PS 3.3 for further explanation.
>LUT Explanation	(0028,3003)	U/U
>LUT Data	(0028,3006)	MC/M (Required if sequence is present)
Presentation LUT Shape	(2050,0020)	MC/M (Required if Presentation LUT Sequence (2050,0010) is not present. Not allowed otherwise.) SCPs shall support the Enumerated Values IDENTITY and LIN OD

H.4.9.2.1.2 Status

The status values which are specific for this SOP Class are defined as follows:

Status	Meaning	Code
Success	Presentation LUT successfully created	0000
Warning	Requested Min Density or Max Density outside of printer's operating range. The printer will use its respective minimum or maximum density value instead.	B605

H.4.9.2.1.3 Behavior

The SCU uses the N-CREATE Service Element to request the SCP to create a Presentation LUT SOP Instance. The SCU shall initialize Attributes of the SOP Class as specified in section H.2.4.

The SCU shall create the Presentation LUT prior to referencing it from the Film Box or the Image Box.

The Presentation LUT persists in the SCP as long as the Association in which it was created is open or an explicit N-DELETE is issued by the SCU.

The SCP shall return the status code of the requested SOP Instance creation. The meaning of success, warning, and failure status codes is defined in Section H.2.5.

The SCP shall use the Grayscale Standard Display Function as specified in PS 3.14 to convert the output of the Presentation LUT to density for printing. If the SCU specifies values for Illumination (2010,015E) and/or Reflected Ambient Light (2010,0160), these values shall be used instead of the default or configured values of the SCP. If these values are not supplied, the SCP shall use its default or configured values. (See H.4.2.2.1.1 for suggested defaults).

--`,,```,,,,````-`-`,,`,,`,`,,`---

Provided by IHS
No reproduction or networking permitted without license from IHS Not for Resale

H.4.9.2.2 N-DELETE

The N-DELETE Service Element is used to delete the Presentation LUT SOP Instance.

H.4.9.2.2.1 Status

There are no specific error codes

H.4.9.2.2.2 Behavior

The SCU uses the N-DELETE Service Element to request the SCP to delete the Presentation LUT SOP Instance. The SCU shall specify the Presentation LUT SOP Instance UID.

The SCP shall not delete a Presentation LUT SOP Instance as long as there are outstanding references to it. Otherwise, it shall delete the specified Presentation LUT SOP Instance. The N-DELETE of a Presentation LUT will prevent the SCU from further referencing it. The SCU shall not reference a previously deleted Presentation LUT. The SCP shall return the status code of the requested Presentation LUT SOP Instance deletion. The meaning of success, warning, and failure status codes is defined in Section H.2.5.

H.4.9.2.4 SOP Class Definition and UID

The Presentation LUT SOP Class UID is “1.2.840.10008.5.1.1.23”.

H.4.10 Pull Print Request SOP Class (Retired)

This section was previously defined in DICOM. It is now retired. See PS 3.4-2004.

H.4.11 Printer Configuration Retrieval SOP Class

H.4.11.1 IOD Description

The Printer Configuration IOD is an abstraction of the hard copy printer and is the basic Information Entity to retrieve key imaging characteristics of the printer

The Printer Configuration Retrieval SOP Instance is created by the SCP during start-up of the hard copy printer and has a well-known SOP Instance UID.

H.4.11.2 DIMSE Service Group

The DIMSE Services which are applicable to the IOD are shown in Table H.4.11.2-1.

Table H.4.11.2-1
IOD DIMSE SERVICES

DIMSE Service Element	Usage SCU/SCP
N-GET	M/M

The meaning of the Usage SCU/SCP is described in Section H.2.4.

This Section describes the behavior of the DIMSE Service which are specific for this IOD. The general behavior of the DIMSE Services is specified in PS 3.7.

H.4.11.2.2 N-GET

The N-GET is used to retrieve an instance of the Printer Configuration Retrieval SOP Class.

H.4.11.2.2.1 Attributes

The Attributes which are retrieved are shown in Table H.4-26.

--`,,```,,,,````-`-`,,`,,`,`,,`---

Provided by IHS
No reproduction or networking permitted without license from IHS Not for Resale

Table H.4-26
N-GET ATTRIBUTES

Attribute Name	Tag	Usage SCU/SCP
Printer Configuration Sequence	(2000,001E)	U/M
>SOP Classes Supported	(0008,115A)	-/M
>Maximum Memory Allocation	(2000,0061)	-/M
>Memory Bit Depth	(2000,00A0)	-/M
>Printing Bit Depth	(2000,00A1)	-/M
>Media Installed Sequence	(2000,00A2)	-/M
>>Item Number	(0020,0019)	-/M
>>Medium Type	(2000,0030)	-/M
>>Film Size ID	(2010,0050)	-/M
>>Min Density	(2010,0120)	-/MC Required if Sequence is Present and Min Density is known
>>Max Density	(2010,0130)	-/M
>Other Media Available Sequence	(2000,00A4)	-/M
>>Medium Type	(2000,0030)	-/M
>>Film Size ID	(2010,0050)	-/M
>>Min Density	(2010,0120)	-/MC Required if Sequence is Present and Min Density is known
>>Max Density	(2010,0130)	-/M
>Supported Image Display Formats Sequence	(2000,00A8)	-/M
>>Rows	(0028,0010)	-/MC Required if all Image Boxes in the Display Format have the same number of rows and columns
>>Columns	(0028,0011)	-/MC Required if all Image Boxes in the Display Format have the same number of rows and columns
>>Image Display Format	(2010,0010)	-/M
>>Film Orientation	(2010,0040)	-/M
>>Film Size ID	(2010,0050)	-/M
>>Printer Resolution ID	(2010,0052)	-/M
>>Printer Pixel Spacing	(2010,0376)	-/M
>>Requested Image Size Flag	(2020,00A0)	-/M
>Default Printer Resolution ID	(2010,0054)	-/M
>Default Magnification Type	(2010,00A6)	-/M

Provided by IHS
No reproduction or networking permitted without license from IHS
Not for Resale

>Other Magnification Types Available	(2010,00A7)	-/M
>Default Smoothing Type	(2010,00A8)	-/M
>Other Smoothing Types Available	(2010,00A9)	-/M
>Configuration Information Description	(2010,0152)	-/M
>Maximum Collated Films	(2010,0154)	-/M
>Decimate/Crop Result	(2020,00A2)	-/M
>Manufacturer	(0008,0070)	-/M
>Manufacturer Model Name	(0008,1090)	-/M
>Printer Name	(2110,0030)	-/M

The meaning of the Usage SCU/SCP is described in Section H.2.4.

H.4.11.2.2.2 Behavior

The SCU uses the N-GET to request the SCP to get a Printer Configuration Retrieval SOP Instance. The SCU shall specify in the N-GET request primitive the UID of the SOP Instance to be retrieved.

The SCP shall return the values for the specified Attributes of the specified SOP Instance.

The SCP shall return the status code of the requested SOP Instance retrieval.

A Failure status code shall indicate that the SCP has not retrieved the SOP Instance.

H.4.11.3 SOP Class Definition and UID

The Printer Configuration Retrieval SOP Class UID is "1.2.840.10008.5.1.1.16.376".

H.4.11.4 Reserved Identifications

The well-known UID of the Printer Configuration Retrieval SOP Instance is "1.2.840.10008.5.1.1.17.376".

H.4.12 Basic Print Image Overlay Box SOP Class (Retired)

This section was previously defined in DICOM. It is now retired. See PS 3.4-2004.

H.5 ASSOCIATION NEGOTIATION

Association establishment is the first phase of any instance of communication between peer DICOM AEs. The Association negotiation procedure is used to negotiate the supported SOP Classes or Meta SOP Classes. PS 3.7 specifies the Association procedures.

The negotiation procedure is used to negotiate the supported Meta SOP Classes and the supported optional SOP Classes. The SCU and SCP shall support at least one Meta SOP Class UID (e.g., Basic Grayscale Print Management Meta SOP Class) and may support additional optional SOP Classes.

The Print Management Service Class does not support extended negotiation.

The SCU shall specify in the A-ASSOCIATE request one Abstract Syntax, in a Presentation Context, for each supported SOP Class or Meta SOP Class.

If the Association is released or aborted then all the SOP Instances except the Print Job SOP Instance and the Printer SOP Instance are deleted.

Provided by IHS
No reproduction or networking permitted without license from IHS
Not for Resale

Note: Pending Print Jobs will still be printed after the release or abortion of the Association.

H.6 EXAMPLE OF PRINT MANAGEMENT SCU SESSION (Informative)

H.6.1 Simple Example

Moved to PS 3.17.

H.6.2 Advanced Example (Retired)

This section was previously defined in DICOM. It is now retired. See PS 3.4-1998.

H.7 EXAMPLE OF THE PULL PRINT REQUEST META SOP CLASS (Informative)

This section was previously defined in DICOM. It is now retired. See PS 3.4-2004.

Provided by IHS
No reproduction or networking permitted without license from IHS
Not for Resale

H.8 OVERLAY EXAMPLES (Informative)

This section was previously defined in DICOM. It is now retired. See PS 3.4-2004.

Provided by IHS
No reproduction or networking permitted without license from IHS
Not for Resale

Annex I MEDIA STORAGE SERVICE CLASS (Normative)

I.1 OVERVIEW

I.1.1 Scope

The Media Storage Service Class defines an application-level class-of-service which facilitates the simple transfer of images and associated information between DICOM AEs by means of Storage Media. It supports:

a. The Interchange of images and a wide range of associated information.

I.1.2 Service Definition

DICOM AEs implement a SOP Class of the Media Storage Service Class by supporting one or more roles among the three roles FSC, FSR or FSU. SOP Classes of the Media Storage Service Class are implemented using the Media Storage Operations (M-WRITE, M-READ, M-DELETE, M-INQUIRE FILE-SET and M-INQUIRE FILE). The services provided by these Operations are defined in PS 3.10.

I.2 BEHAVIOR

This Section discusses the FSC, FSR and FSU behavior for SOP Classes of the Media Storage Service Class.

I.2.1 Behavior of an FSC

The FSC shall be able to create a DICOMDIR File containing the Media Storage Directory SOP Class for the created File-set and create zero or more Files belonging to the File-set by invoking M-WRITE Operations with SOP Instances which meet the requirements of the corresponding IOD. It is the responsibility of the FSC to ensure that the M-WRITE results in the creation of a correctly formatted DICOM File. The manner in which this is achieved is beyond the scope of the DICOM Standard.

The FSC shall support the Media Storage Operation M-INQUIRE FILE-SET and may optionally support the M-INQUIRE FILE.

I.2.2 Behavior of an FSR

The FSR shall be able to recognize a File-set and the corresponding DICOMDIR containing the Media Storage Directory SOP Class. A valid File-set may contain only a DICOMDIR and no other files. If a File-set contains other files with stored SOP Instance, the FSR shall be capable of invoking M-READ Operations to access the content of the Files of the File-set. The manner in which this is achieved is beyond the scope of the DICOM Standard.

The FSR shall support the Media Storage Operation M-INQUIRE FILE and may optionally support the M-INQUIRE FILE-SET.

I.2.3 Behavior of an FSU

The FSU shall be able to recognize a File-set and the corresponding DICOMDIR containing the Media Storage Directory SOP Class. A valid File-set may contain only a DICOMDIR and no other files. If a File-set contains other files with stored SOP Instances, the FSU shall be capable of invoking M-READ Operations to access the content of the Files of the File-set. The manner in which this is achieved is beyond the scope of the DICOM Standard.

The FSU shall support the Media Storage Operation M-INQUIRE FILE and the M-INQUIRE FILE-SET.

--`,,```,,,,````-`-`,,`,,`,`,,`---

Provided by IHS
No reproduction or networking permitted without license from IHS Not for Resale

The FSU shall be able to create one or more new Files belonging to the File-set by invoking M-WRITE Operations with SOP Instances which meet the requirements of the corresponding IOD. It is the responsibility of the FSU to ensure that the M-WRITE results in the creation of a correctly formatted DICOM File. The manner in which this is achieved is beyond the scope of the DICOM Standard. The FSU shall be able to update the contents of the DICOMDIR File by using M-DELETE and or M-WRITE Operations.

I.3 CONFORMANCE

I.3.1 Conformance as an FSC

An implementation which conforms to one of the SOP Classes of the Media Storage Service Class:

a) shall meet the requirements specified in Section I.2.1;
b) shall meet the requirements specified in PS 3.10;
c) shall perform M-WRITE Operations according to the SOP Class specification identified by the SOP Class UID in the Meta File Information;
d) shall support the Media Storage Directory SOP Class (stored in the DICOMDIR File).
e)

I.3.2 Conformance as an FSR

An implementation which conforms to one of the SOP Classes of the Media Storage Service Class:

a) shall meet the requirements specified in Section I.2.2;
b) shall meet the requirements specified in PS 3.10;
c) shall perform M-READ Operations according to the SOP Class specification identified by the SOP Class UID in the Meta File Information. M-READ of non-supported SOP Classes shall simply result in ignoring such stored Data Sets;
d) shall read DICOMDIR Files without a Directory Information Module or with a Directory Information Module including Directory Records of a Type not supported by the implementation.

I.3.3 Conformance as an FSU

An implementation which conforms to one of the SOP Classes of the Media Storage Service Class:

a) shall meet the requirements specified in Section I.2.3;
b) shall meet the requirements specified in PS 3.10;
c) shall perform M-READ Operations according to the SOP Class specification identified by the SOP Class UID in the Meta File Information. M-READ of unsupported SOP Classes shall simply result in ignoring such stored Data Sets;
d) shall perform M-WRITE Operations according to the SOP Class specification identified by the SOP Class UID in the Meta File Information;
e) shall support the Media Storage Directory SOP Class (stored in the DICOMDIR File). Directories containing a Directory Information Module shall be updated by an FSU. Directories containing no Directory Information Module shall not be updated by an FSU;
f) shall read DICOMDIR Files without a Directory Information Module or with a Directory Information Module including Directory Records of a Type not supported by the implementation.

Provided by IHS
No reproduction or networking permitted without license from IHS
Not for Resale

I.3.4 Conformance Statement Requirements

An implementation of the Media Storage Service Class may support one or more Roles as specified in Table I.3-1. In addition, the implementation may conform to one or more of the SOP Classes of the Media Storage Service Class defined in Section I.4. The Conformance Statement shall be in the format defined by PS 3.2.

Table I.3-1
Allowed Combinations of Roles

Roles	FSR	FSC	FSU
With a Directory Information Module	Allowed	Allowed	Allowed Directory shall be updated
With no Directory Information Module	Allowed	Allowed	Allowed Directory shall not be updated

The following aspects shall be documented in the Conformance Statement of any implementation claiming conformance to one of the Media Storage SOP Classes:

— the subset of the Basic Directory Information Object Model supported;
— When the Directory Information Module is created or updated (Directory Information Module supported), the optional standard keys which may be included in Directory Records shall be documented. Private Keys and Private Records may also be documented;

I.3.5 Standard Extended, Specialized, and Private Conformance

In addition to Standard Media Storage SOP Classes, implementations may support Standard Extended, Specialized and/or Private SOP Classes as defined by PS 3.2.

For all three types of SOP Classes, implementations shall be permitted to conform as an FSC, FSR, both or as an FSU. The Conformance Statement shall be in the format defined in PS 3.2.

I.4 MEDIA STORAGE STANDARD SOP CLASSES

The SOP Classes in the Media Storage Service Class identify the Composite and Normalized IODs to be stored. The following Standard SOP Classes are identified in Table I.4-1

Table I.4-1
Media Storage Standard SOP Classes

SOP Class Name	SOP Class UID	IOD Specification
Media Storage Directory Storage	1.2.840.10008.1.3.10	IOD defined in PS 3.3
Computed Radiography Image Storage	1.2.840.10008.5.1.4.1.1.1	IOD defined in PS 3.3
Digital X-Ray Image Storage – For Presentation	1.2.840.10008.5.1.4.1.1.1.1	DX IOD
Digital X-Ray Image Storage – For Processing	1.2.840.10008.5.1.4.1.1.1.1.1	DX IOD
Digital Mammography Image Storage – For Presentation	1.2.840.10008.5.1.4.1.1.1.2	Digital Mammography IOD
Digital Mammography Image Storage – For Processing	1.2.840.10008.5.1.4.1.1.1.2.1	Digital Mammography IOD

Provided by IHS
No reproduction or networking permitted without license from IHS
Not for Resale

Digital Intra-oral X-Ray Image Storage – For Presentation	1.2.840.10008.5.1.4.1.1.1.3	Digital Intra-oral X-Ray IOD
Digital Intra-oral X-Ray Image Storage – For Processing	1.2.840.10008.5.1.4.1.1.1.3.1	Digital Intra-oral X-Ray IOD
CT Image Storage	1.2.840.10008.5.1.4.1.1.2	IOD defined in PS 3.3
Enhanced CT Image Storage	1.2.840.10008.5.1.4.1.1.2.1	IOD defined in PS 3.3
Ultrasound Multi-frame Image Storage	1.2.840.10008.5.1.4.1.1.3.1	IOD defined in PS 3.3
MR Image Storage	1.2.840.10008.5.1.4.1.1.4	IOD defined in PS 3.3
Enhanced MR Image Storage	1.2.840.10008.5.1.4.1.1.4.1	IOD defined in PS 3.3
MR Spectroscopy Storage	1.2.840.10008.5.1.4.1.1.4.2	IOD defined in PS 3.3
Ultrasound Image Storage	1.2.840.10008.5.1.4.1.1.6.1	IOD defined in PS 3.3
Secondary Capture Image Storage	1.2.840.10008.5.1.4.1.1.7	IOD defined in PS 3.3
Multi-frame Single Bit Secondary Capture Image Storage	1.2.840.10008.5.1.4.1.1.7.1	Multi-frame Single Bit Secondary Capture Image
Multi-frame Grayscale Byte Secondary Capture Image Storage	1.2.840.10008.5.1.4.1.1.7.2	Multi-frame Grayscale Byte Secondary Capture Image
Multi-frame Grayscale Word Secondary Capture Image Storage	1.2.840.10008.5.1.4.1.1.7.3	Multi-frame Grayscale Word Secondary Capture Image
Multi-frame True Color Secondary Capture Image Storage	1.2.840.10008.5.1.4.1.1.7.4	Multi-frame True Color Secondary Capture Image
12-lead ECG Waveform Storage	1.2.840.10008.5.1.4.1.1.9.1.1	12-lead ECG Waveform
General ECG Waveform Storage	1.2.840.10008.5.1.4.1.1.9.1.2	General ECG Waveform
Ambulatory ECG Waveform Storage	1.2.840.10008.5.1.4.1.1.9.1.3	Ambulatory ECG Waveform
Hemodynamic Waveform Storage	1.2.840.10008.5.1.4.1.1.9.2.1	Hemodynamic Waveform
Cardiac Electrophysiology Waveform Storage	1.2.840.10008.5.1.4.1.1.9.3.1	Cardiac Electrophysiology Waveform
Basic Voice Audio Waveform Storage	1.2.840.10008.5.1.4.1.1.9.4.1	Basic Voice Audio Waveform
Grayscale Softcopy Presentation State Storage	1.2.840.10008.5.1.4.1.1.11.1	Grayscale Softcopy Presentation State Storage
Color Softcopy Presentation State Storage	1.2.840.10008.5.1.4.1.1.11.2	Color Softcopy Presentation State
Pseudo-Color Softcopy Presentation State Storage	1.2.840.10008.5.1.4.1.1.11.3	Pseudo-Color Softcopy Presentation State

Provided by IHS
No reproduction or networking permitted without license from IHS
Not for Resale

Blending Softcopy Presentation State Storage	1.2.840.10008.5.1.4.1.1.11.4	Blending Softcopy Presentation State
X-Ray Angiographic Image Storage	1.2.840.10008.5.1.4.1.1.12.1	IOD defined in PS 3.3
Enhanced XA Image Storage	1.2.840.10008.5.1.4.1.1.12.1.1	IOD defined in PS 3.3
X-Ray Radiofluoroscopic Image Storage	1.2.840.10008.5.1.4.1.1.12.2	IOD defined in PS 3.3
Enhanced XRF Image Storage	1.2.840.10008.5.1.4.1.1.12.2.1	IOD defined in PS 3.3
Nuclear Medicine Image Storage	1.2.840.10008.5.1.4.1.1.20	IOD defined in PS 3.3
Raw Data Storage	1.2.840.10008.5.1.4.1.1.66	IOD defined in PS 3.3
Spatial Registration Storage	1.2.840.10008.5.1.4.1.1.66.1	Spatial Registration
Spatial Fiducials Storage	1.2.840.10008.5.1.4.1.1.66.2	Spatial Fiducials
Real World Value Mapping Storage	1.2.840.10008.5.1.4.1.1.67	Real World Value Mapping
VL Endoscopic Image Storage	1.2.840.10008.5.1.4.1.1.77.1.1	VL Endoscopic Image
Video Endoscopic Image Storage	1.2.840.10008.5.1.4.1.1.77.1.1.1	Video Endoscopic Image
VL Microscopic Image Storage	1.2.840.10008.5.1.4.1.1.77.1.2	VL Microscopic Image
Video Microscopic Image Storage	1.2.840.10008.5.1.4.1.1.77.1.2.1	Video Microscopic Image
VL Slide-Coordinates Microscopic Image Storage	1.2.840.10008.5.1.4.1.1.77.1.3	VL Slide-Coordinates Microscopic Image
VL Photographic Image Storage	1.2.840.10008.5.1.4.1.1.77.1.4	VL Photographic Image
Video Photographic Image Storage	1.2.840.10008.5.1.4.1.1.77.1.4.1	Video Photographic Image
Ophthalmic Photography 8 Bit Image Storage	1.2.840.10008.5.1.4.1.1.77.1.5.1	Ophthalmic Photography 8 Bit Image
Ophthalmic Photography 16 Bit Image Storage	1.2.840.10008.5.1.4.1.1.77.1.5.2	Ophthalmic Photography 16 Bit Image
Stereometric Relationship Storage	1.2.840.10008.5.1.4.1.1.77.1.5.3	Stereometric Relationship
Basic Text SR	1.2.840.10008.5.1.4.1.1.88.11	Basic Text SR
Enhanced SR	1.2.840.10008.5.1.4.1.1.88.22	Enhanced SR
Comprehensive SR	1.2.840.10008.5.1.4.1.1.88.33	Comprehensive SR
Procedure Log	1.2.840.10008.5.1.4.1.1.88.40	Procedure Log
Mammography CAD SR	1.2.840.10008.5.1.4.1.1.88.50	Mammography CAD SR IOD
Key Object Selection Document	1.2.840.10008.5.1.4.1.1.88.59	Key Object Selection Document
Chest CAD SR	1.2.840.10008.5.1.4.1.1.88.65	Chest CAD SR IOD

Provided by IHS
No reproduction or networking permitted without license from IHS
Not for Resale

X-Ray Radiation Dose SR	1.2.840.10008.5.1.4.1.1.88.67	X-Ray Radiation Dose SR
Encapsulated PDF Storage	1.2.840.10008.5.1.4.1.1.104.1	Encapsulated PDF IOD
Positron Emission Tomography Image Storage	1.2.840.10008.5.1.4.1.1.128	IOD defined in PS 3.3
RT Image Storage	1.2.840.10008.5.1.4.1.1.481.1	IOD defined in PS 3.3
RT Dose Storage	1.2.840.10008.5.1.4.1.1.481.2	IOD defined in PS 3.3
RT Structure Set Storage	1.2.840.10008.5.1.4.1.1.481.3	IOD defined in PS 3.3
RT Beams Treatment Record Storage	1.2.840.10008.5.1.4.1.1.481.4	IOD defined in PS 3.3
RT Plan Storage	1.2.840.10008.5.1.4.1.1.481.5	IOD defined in PS 3.3
RT Brachy Treatment Record Storage	1.2.840.10008.5.1.4.1.1.481.6	IOD defined in PS 3.3
RT Treatment Summary Record Storage	1.2.840.10008.5.1.4.1.1.481.7	IOD defined in PS 3.3
RT Ion Plan Storage	1.2.840.10008.5.1.4.1.1.481.8	IOD defined in PS 3.3
RT Ion Beams Treatment Record Storage	1.2.840.10008.5.1.4.1.1.481.9	IOD defined in PS 3.3
Hanging Protocol Storage	1.2.840.10008.5.1.4.38.1	Hanging Protocol IOD

Notes: 1. Except for the Media Storage Directory SOP Classes, the above listed Media Storage Standard SOP Classes are assigned the same UID Value as the corresponding network communication SOP Classes. This was done to simplify UID assignment. Although these SOP Classes are based on different Operations, the context of their usage should unambiguously distinguish a Media Storage SOP Class from a Network communication SOP Class.

2. The storage of Normalized Print SOP Instances on media was previously defined in DICOM. They have been retired. See PS 3.4-1998.

3. The storage of Detached and Standalone SOP Instances on media was previously defined in DICOM. They have been retired. See PS 3.4-2004

I.4.1Specialization for Standard SOP Classes

I.4.1.1 Softcopy Presentation State Storage SOP Classes

See Annex N.

I.4.1.2 Structured Reporting Storage SOP Classes

The requirements of Annex O apply to the following SOP Classes:

- Basic Text SR
- Enhanced SR
- Comprehensive SR
- Mammography CAD SR
- Chest CAD SR
- Procedure Log

Provided by IHS
No reproduction or networking permitted without license from IHS
Not for Resale

- X-Ray Radiation Dose SR

Annex O requirements do not apply to the Key Object Selection Document SOP Class.

I.5 RETIRED STANDARD SOP CLASSES

The SOP Classes in Table I.5-1 were defined in previous versions of the DICOM Standard. They are now retired and have been replaced by new standard SOP Classes shown in Table I.4-1.

Note: Usage of the retired SOP Classes is permitted by DICOM. However, new implementations are strongly encouraged to implement the newer SOP Classes.

Table I.5-1
RETIRED STANDARD SOP CLASSES

SOP Class Name	SOP Class UID
Nuclear Medicine Image Storage	1.2.840.10008.5.1.4.1.1.5
Ultrasound Image Storage	1.2.840.10008.5.1.4.1.1.6
Ultrasound Multi-frame Image Storage	1.2.840.10008.5.1.4.1.1.3
X-Ray Angiographic Bi-plane Image Storage	1.2.840.10008.5.1.4.1.1.12.3

Provided by IHS
No reproduction or networking permitted without license from IHS
Not for Resale

Annex J STORAGE COMMITMENT SERVICE CLASS (Normative)

J.1 OVERVIEW

J.1.1 Scope

The mechanism currently defined in DICOM for network based storage of SOP Instances, the Storage Service Class, allows a Service Class User (SCU) to transmit images and other Composite SOP Instances to a Service Class Provider (SCP). However, the Storage Service Class does not specify that the SCP explicitly take responsibility for the safekeeping of data into account. That is, there is no commitment that the SCP will do more than accept the transmitted SOP Instances. In order to have medical image management in addition to medical image communication, there is a need for a Service Class within DICOM that ensures that there is an explicitly defined commitment to store the SOP Instances.

The Storage Commitment Service Class defines an application-level class-of-service which facilitates this commitment to storage. The Storage Commitment Service Class enables an Application Entity (AE) acting as an SCU to request another Application Entity (AE) acting as an SCP to make the commitment for the safekeeping of the SOP Instances (i.e. that the SOP Instances will be kept for an implementation specific period of time and can be retrieved). The AE where such SOP Instances can later be retrieved may be the SCP where storage commitment was accepted or it may be distinct from that SCP.

The SCP implementation defines how it provides its commitment to storage. Certain SCPs may commit to permanently store the SOP Instances (e.g. an archive system) while other SCPs may commit to provide storage of the SOP Instances for a limited amount of time. The SCP is required to document in its Conformance Statement the nature of its commitment to storage (e.g. duration of storage, retrieve capabilities and latency, capacity).

The possession of a link to access pixel data shall not be sufficient for the SCP to commit to storage. A copy of the entire pixel data is required.

Note: This situation may arise in the context of a JPIP Referenced Pixel Data Transfer Syntax.

Once the SCP has accepted the commitment to store the SOP Instances, the SCU may decide that it is appropriate to delete its copies of the SOP Instances. These types of policies are outside the scope of this Standard, however, the SCU is required to document these policies in its Conformance Statement.

J.1.2 Models Overview

The request for storage commitment can be accomplished using the Push Model.

The Push model expects an SCU to transmit SOP Instances to an SCP using an appropriate mechanism outside the scope of this Service Class. Storage commitment is then initiated by transmitting a Storage Commitment Request containing references to a set of one or more SOP Instances. Success or failure of storage commitment is subsequently indicated via a notification from the SCP to the SCU.

Notes: 1. A Pull Model was defined in earlier versions, but has been retired. See PS 3.4-2001.

2. As indicated, the mechanisms used to transfer SOP Instances from an SCU to an SCP are outside the scope of this Service Class. However, typical mechanisms are found in the Storage Service Class, the Query/Retrieve Service Class, or Media Exchange.

--`,,```,,,,````-`-`,,`,,`,`,,`---

Provided by IHS
No reproduction or networking permitted without license from IHS Not for Resale

J.2 CONFORMANCE OVERVIEW

The application-level services addressed by this Service Class are specified via the Storage Commitment Push Model SOP Class.:

An SCP implementation of the Storage Commitment Service Class shall support the Storage Commitment Push Model SOP Class.

The SOP Class specifies Attributes, operations, notifications, and behavior applicable to the SOP Class. The conformance requirements shall be specified in terms of the Service Class Provider (SCP) and the Service Class User (SCU).

The Storage Commitment Service Class uses the Storage Commitment IOD as defined in PS 3.3 and the N-ACTION and N-EVENT-REPORT DIMSE Services specified in PS 3.7.

J.2.1 Association Negotiation

Association establishment is the first phase of any instance of communication between peer DICOM AEs. The Association negotiation rules as specified in PS 3.7 shall be used to negotiate the supported SOP Classes.

Support for the SCP/SCU role selection negotiation is mandatory. The SOP Class Extended Negotiation shall not be supported.

An SCP implementation of the Storage Commitment Service Class shall support the Storage Commitment Push Model SOP Class.

J.3 STORAGE COMMITMENT PUSH MODEL SOP CLASS

The Storage Commitment Push Model SOP Class is intended for those Application Entities requiring storage commitment where the SCU determines the time at which the SOP Instances are transmitted. The SCU transmits the SOP Instances to the SCP using an appropriate mechanism. The request for storage commitment is transmitted to the SCP together with a list of references to one or more SOP Instances. Success or failure of storage commitment is subsequently indicated by a notification from the SCP to the SCU.

J.3.1 DIMSE Service Group

The DIMSE-N Services applicable to the Storage Commitment Push Model SOP Class are shown in Table J.3.1-1.

Table J.3.1-1
IOD DIMSE SERVICES

DIMSE Service Element	Usage SCU/SCP
N-EVENT-REPORT	M/M
N-ACTION	M/M

The DIMSE-N Services and Protocol are specified in PS 3.7.

J.3.2 Operations

The DICOM AEs which claim conformance to this SOP Class as an SCU shall invoke the N-ACTION operation. The DICOM AEs which claim conformance to this SOP Class as an SCP shall support the N-ACTION operation.

--`,,```,,,,````-`-`,,`,,`,`,,`---

Provided by IHS
No reproduction or networking permitted without license from IHS
Not for Resale

J.3.2.1 Storage Commitment Request

The Storage Commitment Request operation allows an SCU to request an SCP to commit to the safekeeping of a set of SOP Instances. This operation shall be invoked through the N-ACTION primitive.

J.3.2.1.1 Action Information

The DICOM AEs which claim conformance to this SOP Class as an SCU and/or an SCP shall support the Action Types and Action Information as specified in Table J.3-1.

Table J.3-1
STORAGE COMMITMENT REQUEST - ACTION INFORMATION

Action Type Name	Action Type ID	Attribute	Tag	Requirement Type SCU/SCP
Request Storage Commitment	1	Transaction UID	(0008,1195)	1/1
		Storage Media File-Set ID	(0088,0130)	3/3 See Section J.3.2.1.1.1.
		Storage Media File-Set UID	(0088,0140)	3/3 See Section J.3.2.1.1.1.
		Referenced SOP Sequence	(0008,1199)	1/1
		>Referenced SOP Class UID	(0008,1150)	1/1
		>Referenced SOP Instance UID	(0008,1155)	1/1 See Section J.3.2.1.1.3.
		>Storage Media File-Set ID	(0088,0130)	3/3 See Section J.3.2.1.1.1.
		>Storage Media File-Set UID	(0088,0140)	3/3 See Section J.3.2.1.1.1.

J.3.2.1.1.1 Storage Media File Set ID Attributes

If present, the Storage Media File-Set ID (0088,0130) and Storage Media File-Set UID (0088,0140) shall appear either outside the Referenced SOP Sequence (0008,1199), or within one or more Items within that sequence, but not both. If they appear outside of the sequence, then all of the SOP Instances within the sequence shall be retrievable from the specified Storage Media File-Set. If they appear within an Item of that sequence, then the SOP Instance referenced to by that Item shall be retrievable from the specified Storage Media File-Set.

J.3.2.1.1.2 Referenced Performed Procedure Step Sequence Attribute (Retired)

Referenced Performed Procedure Step Sequence (0008,1111) was included in earlier versions, but its use here has been retired. See PS 3.4-2001, in which the Attribute was formerly known as Referenced Study Component Sequence.

Note: This section formerly specified a means of referencing a Study Component that has been completed and semantics that the list of images in the commitment request represented a complete set. This section has been retired since the Modality Performed Procedure Step SOP

Provided by IHS
No reproduction or networking permitted without license from IHS
Not for Resale

Classes provide the same facility in a more appropriate service.

J.3.2.1.1.3 SOP Instance Reference

A SOP Instance may be referenced only once within the Referenced SOP Sequence (0008,1199).

J.3.2.1.2 Service Class User Behavior

The SCU shall use the N-ACTION primitive to request the SCP the safekeeping of a set of SOP Instances. The SOP Instances are referenced in the Action Information as specified in Table J.3-1. The Action Type ID shall be set to 1 specifying the request for storage commitment.

The SCU shall supply the Transaction UID Attribute (0008,1195) to uniquely identify each Storage Commitment Request. The value of the Transaction UID Attribute will be included by the SCP in the Storage Commitment Result (see Section J.3.3.1). Use of the Transaction UID Attribute allows the SCU to match requests and results which may occur over the same or different Associations.

The N-ACTION primitive shall contain the well-known Storage Commitment Push Model SOP Instance UID (defined in Section J.3.5) in its Requested SOP Instance UID parameter.

Note: In the usage described here, there is no explicit creation of a SOP Instance upon which an N-ACTION primitive may operate. Instead, the N-ACTION primitive operates upon a constant well-known SOP Instance. This SOP Instance is conceptually created during startup of each Storage Commitment Service Class SCP Application.

Upon receipt of a successful N-ACTION Response Status Code from the SCP, the SCU now knows that the SCP has received the N-ACTION request. Upon receipt of any other N-ACTION Response Status Code from the SCP, the SCU now knows that the SCP will not process the request and therefore will not commit to the storage of the SOP Instances referenced by the Storage Commitment Request. The actions taken by the SCU upon receiving the status is beyond the scope of this Standard. Upon receipt of a failure status, the Transaction UID is no longer active and shall not be reused for other transactions.

At any time after receipt of the N-ACTION-Response, the SCU may release the association on which it sent the N-ACTION-Request.

Notes: 1. Failure of storage commitment will be signaled via the N-EVENT-REPORT primitive.

2. In situations where the SOP Instance(s) are transferred via Media Interchange, the Storage Commitment Request may fail because the piece of Media containing the referenced SOP Instance(s) may not yet have been read. Attributes (0088,0130) File-Set ID and (0088,0140) File-Set UID may or may not be present in the case of Media Interchange. They may be provided to facilitate identification of the media containing the transferred SOP Instance(s) by the Storage Commitment SCP.

J.3.2.1.3 Service Class Provider Behavior

Upon receipt of the N-ACTION request, the SCP shall return, via the N-ACTION response primitive, the N-ACTION Response Status Code applicable to the associated request. A success status conveys that the SCP has successfully received the request. A failure status conveys that the SCP is not processing the request.

Notes: 1. Failure of storage commitment will be signaled via the N-EVENT-REPORT primitive.

2. When a Storage Commitment Request is received by an SCP it may immediately assess the list of references for which Storage Commitment is requested and return an N-EVENT-REPORT. In situations where the SOP Instance(s) are transferred via Media Interchange, the N-EVENT-REPORT may fail because the piece of Media containing the referenced SOP Instance(s) may not yet have been read. Attributes (0088,0130) File-Set ID and (0088,0140) File-Set UID may or may not be present in the case of Media Interchange. They may be used

--`,,```,,,,````-`-`,,`,,`,`,,`---

Provided by IHS
No reproduction or networking permitted without license from IHS Not for Resale

to facilitate identification of the media containing the transferred SOP Instance(s) by the Storage Commitment SCP.

J.3.2.1.4 Status Codes

No Service Class specific status values are defined for the N-ACTION Service. See PS 3.7 for general response status codes.

J.3.3 Notifications

The DICOM AEs which claim conformance to this SOP Class as an SCP shall invoke the N-EVENT-REPORT request. The DICOM AEs which claim conformance to this SOP Class as an SCU shall be capable of receiving the N-EVENT-REPORT request.

J.3.3.1 Storage Commitment Result

The Storage Commitment Result notification allows an SCP to inform the SCU whether or not it has accepted storage commitment responsibility for the SOP Instances referenced by a Storage Commitment Request. This notification is also used to convey error information (i.e. storage commitment could not be achieved for one or more of the referenced SOP Instances). This notification shall be invoked through the N-EVENT-REPORT primitive.

J.3.3.1.1 Event Information

The DICOM AEs which claim conformance to this SOP Class as an SCU and/or an SCP shall support the Event Types and Event Information as specified in Table J.3-2.

Table J.3-2
STORAGE COMMITMENT RESULT - EVENT INFORMATION

Event Type Name	Event Type ID	Attribute	Tag	Requirement Type SCU/SCP
Storage Commitment Request Successful	1	Transaction UID	(0008,1195)	-/1
		Retrieve AE Title	(0008,0054)	-/3 See Section J.3.3.1.1.1.
		Storage Media File-Set ID	(0088,0130)	-/3 See Section J.3.3.1.1.2.
		Storage Media File-Set UID	(0088,0140)	-/3 See Section J.3.3.1.1.2.
		Referenced SOP Sequence	(0008,1199)	-/1
		>Referenced SOP Class UID	(0008,1150)	-/1
		>Referenced SOP Instance UID	(0008,1155)	-/1
		>Retrieve AE Title	(0008,0054)	-/3 See Section J.3.3.1.1.1.
		>Storage Media File-Set ID	(0088,0130)	-/3 See Section J.3.3.1.1.2.
		>Storage Media File-Set UID	(0088,0140)	-/3 See Section J.3.3.1.1.2.

Provided by IHS
No reproduction or networking permitted without license from IHS
Not for Resale

Storage Commitment Request Complete - Failures Exist	2	Transaction UID	(0008,1195)	-/1
		Retrieve AE Title	(0008,0054)	-/3 See Section J.3.3.1.1.1.
		Storage Media File-Set ID	(0088,0130)	-/3 See Section J.3.3.1.1.2.
		Storage Media File-Set UID	(0088,0140)	-/3 See Section J.3.3.1.1.2.
		Referenced SOP Sequence	(0008,1199)	-/1C This Attribute shall be provided if storage commitment for one or more SOP Instances has been successful
		>Referenced SOP Class UID	(0008,1150)	-/1
		>Referenced SOP Instance UID	(0008,1155)	-/1
		>Retrieve AE Title	(0008,0054)	-/3 See Section J.3.3.1.1.1.
		>Storage Media File-Set ID	(0088,0130)	-/3 See Section J.3.3.1.1.2.
		>Storage Media File-Set UID	(0088,0140)	-/3 See Section J.3.3.1.1.2.
		Failed SOP Sequence	(0008,1198)	-/1
		>Referenced SOP Class UID	(0008,1150)	-/1
		>Referenced SOP Instance UID	(0008,1155)	-/1
		>Failure Reason	(0008,1197)	-/1

J.3.3.1.1.1 Retrieve AE Title Attribute

If present, the Retrieve AE Title (0008,0054) shall appear either outside the Referenced SOP Sequence (0008,1199), or within one or more Items within that sequence, but not both. If they appear outside of the sequence, then all of the SOP Instances within the sequence shall be retrievable from the specified Retrieve AE Title. If they appear within an Item of that sequence, then the SOP Instance referenced to by that Item shall be retrievable from the specified Retrieve AE Title.

--`,,```,,,,````-`-`,,`,,`,`,,`---

Provided by IHS
No reproduction or networking permitted without license from IHS Not for Resale

J.3.3.1.1.2 Storage Media File Set ID Attributes

If present, the Storage Media File-Set ID (0088,0130) and Storage Media File-Set UID (0088,0140) shall appear either outside the Referenced SOP Sequence (0008,1199), or within one or more Items within that sequence, but not both. If they appear outside of the sequence, then all of the SOP Instances within the sequence shall be retrievable from the specified Storage Media File-Set. If they appear within an Item of that sequence, then the SOP Instance referenced to by that Item shall be retrievable from the specified Storage Media File-Set.

J.3.3.1.2 Service Class Provider Behavior

If the SCP determines that it has successfully completed storage commitment for all the SOP Instances referenced by a Storage Commitment Request, the SCP shall issue an N-EVENT-REPORT with the Event Type ID set to 1 (storage commitment request successful). This event shall include references to the successfully stored SOP Instances. The SCP shall store the referenced SOP Instances in accordance with Level 2 as defined in the Storage Service Class (i.e. all Attributes, including Private Attributes). The Storage Service Class is defined in PS 3.4. After the N-EVENT-REPORT has been sent, the Transaction UID is no longer active and shall not be reused for other transactions.

If it is determined that storage commitment could not be achieved for one or more referenced SOP Instances, the SCP shall issue an N-EVENT-REPORT with the Event Type ID set to 2 (storage commitment request complete - failure exists) conveying that the SCP does not commit to store all SOP Instances. This event shall include references to the failed SOP Instances together with references to those SOP Instances which have been successfully stored. For each failed SOP Instance the reason for failure shall be described by the Failure Reason Attribute. After the N-EVENT-REPORT has been sent, the Transaction UID is no longer active and shall not be reused for other transactions.

The complete set of SOP Instances referenced by the Referenced SOP Sequence (0008,1150) Attribute, in the initiating N-ACTION, shall be present in both Event Types.

The N-EVENT-REPORT shall include the same Transaction UID Attribute (0008,1195) value as contained in the initiating N-ACTION.

An SCP shall be capable of issuing the N-EVENT-REPORT on a different association than the one on which the N-ACTION operation was performed.

Notes: 1. The SCP may attempt to issue the N-EVENT-REPORT on the same Association, but this operation may fail because the SCU is free to release at any time the Association on which it sent the N-ACTION-Request. As DICOM defaults the association requestor to the SCU role, the SCP (i.e. the association requester) negotiates an SCP role using the SCU/SCP role negotiation (see PS 3.7).

2. When responding on a different Association, the SCP must use the same AE Title as it used on the original Association, because the DICOM Standard defines a Service between two peer applications, each identified by an AE Title. Thus the SCP should be consistently identified for all Associations in the particular instance of the Storage Commitment Service.

3. The optional Attributes Retrieve AE Title (0008,0054), Storage Media File-Set ID (0088,0130) and Storage Media File-Set UID (0088,0140) within the Event Information allows an SCP to indicate the location where it has stored SOP Instances for safekeeping. For example, the SCP could relay SOP Instances to a third Application Entity using this Service Class. In which case it can use the Retrieve AE Title Attribute to indicate the real location of the data. Another example is if the SCP stores data on media, it can indicate this using the Storage Media File-Set ID and UID Attributes.

J.3.3.1.3 Service Class User Behavior

An SCU shall be capable of receiving an N-EVENT-REPORT on a different association than the one on which the N-ACTION operation was performed.

Provided by IHS
No reproduction or networking permitted without license from IHS
Not for Resale

Note: To receive this N-EVENT-REPORT, the SCU accepts an association where the SCP role is proposed by the Storage Commitment SCP acting as an association requestor.

The SCU shall return, via the N-EVENT-REPORT response primitive, the N-EVENT-REPORT Response Status Code applicable to the associated request. The actions taken by the SCU upon receiving the N-EVENT-REPORT are beyond the scope of this Standard but are stated in its Conformance Statement.

Note: In the case where the SCP indicates that it cannot achieve storage commitment for some SOP Instances, the SCU might, for example, re-send the failed SOP Instances to the SCP (via the Storage Service Class) and then re-transmit the N-ACTION request. However, this behavior is beyond the scope of this Standard.

J.3.3.1.4 Status Codes

No Service Class specific status values are defined for the N-EVENT-REPORT Service. See PS 3.7 for general response status codes.

Note: This Section refers to status codes returned by the N-EVENT-REPORT response primitive. The Failure Reason Attribute returned in the Storage Commitment Result - Event Information (see PS 3.3) are described in the Storage Commitment IOD.

J.3.4 Storage Commitment Push Model SOP Class UID

The Storage Commitment Push Model SOP Class shall be uniquely identified by the Storage Commitment Push Model SOP Class UID which shall have the value "1.2.840.10008.1.20.1".

J.3.5 Storage Commitment Push Model Reserved Identification

The well-known UID of the Storage Commitment Push Model SOP Instance shall have the value "1.2.840.10008.1.20.1.1".

J.3.6 Conformance Requirements

Implementations claiming Standard SOP Class Conformance to the Storage Commitment Push Model SOP Class shall be conformant as described in this Section and shall include within their Conformance Statement information as described in this Section and sub-Sections.

An implementation may claim conformance to this SOP Class as an SCU, SCP or both. The Conformance Statement shall be in the format defined in PS 3.2.

J.3.6.1 SCU Conformance

An implementation which is conformant to this SOP Class as an SCU shall meet conformance requirements for

— the operations and actions which it invokes
— the notifications which it receives.

The mechanisms used by the SCU to transfer SOP Instances to the SCP shall be documented.

J.3.6.1.1 Operations

The SCU shall document in the SCU Operations Statement the actions and behavior which cause the SCU to generate an N-ACTION primitive (Storage Commitment Request).

The SCU shall specify the SOP Class UIDs for which it may request storage commitment.

The SCU shall specify the duration of applicability of the Transaction UID. This may be specified as a time limit or a policy which defines the end of a transaction (e.g. how long will the SCU wait for a N-EVENT-REPORT).

Provided by IHS
No reproduction or networking permitted without license from IHS Not for Resale

The SCU shall specify if it supports the optional Storage Media File-Set ID & UID Attributes in the N-ACTION. If these Attributes are supported, the SCU shall also specify which Storage Media Application Profiles are supported.

The SCU Operations Statement shall be formatted as defined in PS 3.2

J.3.6.1.2 Notifications.

The SCU shall document in the SCU Notifications Statement the behavior and actions taken by the SCU upon receiving an N-EVENT-REPORT primitive (Storage Commitment Result).

The SCU shall specify the behavior and actions performed when a success status is received (i.e. if and when local SOP Instances copies are deleted).

The SCU shall specify the behavior and actions performed when a failure status is received (i.e. recovery mechanisms, etc.).

The SCU Notifications Statement shall be formatted as defined in PS 3.2

J.3.6.2 SCP Conformance.

An implementation which is conformant to this SOP Class as an SCP shall meet conformance requirements for

- the operations and actions which it performs
- the notifications which it generates.

J.3.6.2.1 Operations

The SCP shall document in the SCP Operations Statement the behavior and actions of the SCP upon receiving the N-ACTION primitive (Storage Commitment Request).

The SCP shall specify parameters indicating the level of storage commitment, such as:

- under what conditions the SCP would delete SOP Instances
- persistence of storage
- capacity
- volatility
- other pertinent information

The SCP shall specify the mechanisms and characteristics of retrieval of stored SOP Instances, such as:

- supported query/retrieve services
- latency
- other pertinent information

The SCP shall specify if it supports the optional Storage Media File-Set ID & UID Attributes in the N-ACTION. If these Attributes are supported, the SCP shall also specify which Storage Media Application Profiles are supported.

The SCP Operations Statement shall be formatted as defined in PS 3.2

J.3.6.2.2 Notifications

The SCP shall document in the SCP Notifications Statement the behavior and actions which cause the SCP to generate an N-EVENT-REPORT primitive (Storage Commitment Result).

--`,,```,,,,````-`-`,,`,,`,`,,`---

Provided by IHS
No reproduction or networking permitted without license from IHS Not for Resale

The SCP shall specify if it supports the optional Storage Media File-Set ID & UID Attributes in the N-EVENT-REPORT and describe the policies for how the Media is used. The SCP shall also specify which Storage Media Application Profiles are supported.

The SCP shall specify if it supports the optional Retrieve AE Title (0008,0054) Attribute in the N-EVENT-REPORT and describe the policies for how it is used.

The SCP Notifications Statement shall be formatted as defined in PS 3.2

J.4 STORAGE COMMITMENT PULL MODEL SOP CLASS (RETIRED)

A Pull Model was defined in earlier versions, but has been retired. See PS 3.4-2001.

J.5 STORAGE COMMITMENT EXAMPLES (Informative)

Moved to PS 3.17

--`,,```,,,,````-`-`,,`,,`,`,,`---

Provided by IHS
No reproduction or networking permitted without license from IHS Not for Resale

Annex K BASIC WORKLIST MANAGEMENT SERVICE (Normative)

K.1 OVERVIEW

K.1.1 Scope

The Basic Worklist Management Service Class defines an application-level class-of-service which facilitates the access to worklists.

A worklist is the structure to present information related to a particular set of tasks. It specifies particular details for each task. The information supports the selection of the task to be performed first, and supports the performance of that task.

Note: One example is the worklist used to present information about scheduled imaging procedures at an imaging modality and to the operator of that modality. Another example is the worklist presented at a radiological reporting station to indicate which studies have been performed and are waiting to be reported.

This annex defines a service for communicating such worklists. The following are characteristics for this Service Class:

— The worklist has to be queried by the Application Entity (AE) associated with the application on which, or by which, the tasks included in the worklist have to be performed. In this query, a number of search keys can be used, defined for each particular worklist SOP class.

— The worklist consists of worklist items, each item is related to one task. A worklist item contains Attributes from different objects related to the task.

Notes: 1. This Service Class is not intended to provide a comprehensive generalized database query mechanism such as SQL. Instead, the Basic Worklist Management Service Class is focused towards basic queries using a small set of common Key Attributes used as Matching Keys or Return Attributes. Basic Worklist Information Models are not hierarchical.

2. Basic Worklist Information Models always consist of one query level, which may consist of one or more entities. There is no distinction between hierarchical and relational use of C-Find in the Basic Worklist Management Service Class.

K.1.2 Conventions

Key Attributes serve two purposes, they may be used as : Matching Key Attributes and Return Key Attributes. Matching Key Attributes may be used for matching (criteria to be used in the C-FIND request to determine whether an entity matches the query). Return Key Attributes may be used to specify desired return Attributes (what elements in addition to the Matching Key Attributes have to be returned in the C-FIND response).

Note: Matching Keys are typically used in an SQL ‘where’ clause. Return Keys are typically used in an SQL ‘select’ clause to convey the Attribute values.

Matching Key Attributes may be of Type "required" (R) or "optional" (O). Return Key Attributes may be of Type 1, 1C, 2, 2C, 3 as defined in PS 3.5.

K.1.3 Worklist Information Model

In order to serve as a Service Class Provider (SCP) of the Basic Worklist Service Class, a DICOM Application Entity (AE) possesses information about the Attributes of a number of managed worklist entries. This information is organized into Worklist Information Models.

Provided by IHS
No reproduction or networking permitted without license from IHS
Not for Resale

Worklists are implemented against well defined Information Models. A specific SOP Class of the Basic Worklist Service Class consists of an informative Overview, an Information Model Definition and a DIMSE-C Service Group. In this Service Class, the Information Model plays a role similar to an Information Object Definition (IOD) of most other DICOM Service Classes.

K.1.4 Service Definition

Two peer DICOM AEs implement a SOP Class of the Basic Worklist Service Class with one serving in the SCU role and one serving in the SCP role. SOP Classes of the Basic Worklist Service Class are implemented using the DIMSE-C C-FIND service as defined in PS 3.7.

Only a baseline behavior of the DIMSE-C C-FIND is used in the Service Class.

The following description of the DIMSE-C C-FIND service provides a brief overview of the SCU/SCP semantics.

A C-FIND service conveys the following semantics:

- The SCU requests that the SCP perform a match for the Matching Keys and return values for the Return Keys which have been specified in the Identifier of the request, against the information that the SCP possesses, to the objects specified in the SOP Class.

Note: In this Annex, the term "Identifier" refers to the Identifier service parameter of the C-FIND service as defined in PS 3.7.

- The SCP generates a C-FIND response for each match with an Identifier containing the values of all Matching Key Attributes and all known Return Key Attributes requested. Each response contains one worklist item. All such responses will contain a status of Pending. A status of Pending indicates that the process of matching is not complete.
- When the process of matching is complete a C-FIND response is sent with a status of Success and no Identifier.
- A Refused or Failed response to a C-FIND request indicates that the SCP is unable to process the request.
- The SCU may cancel the C-FIND service by issuing a C-CANCEL-FIND request at any time during the processing of the C-FIND service. The SCP will interrupt all matching and return a status of Canceled.

Note: The SCU needs to be prepared to receive C-FIND responses sent by the SCP until the SCP finally processed the C-CANCEL-FIND request.

K.2 WORKLIST INFORMATION MODEL DEFINITION

The Worklist Information Model is identified by the SOP Class negotiated at Association establishment time. The SOP Class is composed of both an Information Model and a DIMSE-C Service Group.

Information Model Definitions for standard SOP Classes of the Worklist Service Class are defined in this Annex. A Worklist Information Model Definition contains:

- an Entity-Relationship Model Definition
- a Key Attributes Definition;

K.2.1 Entity-Relationship Model Definition

Basic Worklist Information Models consist of a single level, that includes all Matching Key Attributes and all Return Key Attributes, which may be sent from the SCU to the SCP in the request and whose values are expected to be returned from the SCP to the SCU in each of the responses (or worklist items). The Matching Key Attribute values in the request specify the worklist items that are to be returned in the responses. All Key Attributes (the Matching Key

--`,,```,,,,````-`-`,,`,,`,`,,`---

Provided by IHS
No reproduction or networking permitted without license from IHS Not for Resale

Attributes and the Return Key Attributes) in the request determine which Attribute values are returned in the responses for that worklist.

A Worklist Item has a one-to-one relationship with the real-world object defining the root for the Basic Worklist Information Model. In addition the worklist item is related to a number of other objects from the real-world model. Each of these real-world objects is represented by a hierarchy of entities organized in an (internal) Entity-Relationship Model.

K.2.2 Attributes Definition

Attributes are defined for each entity in the internal Entity-Relationship Model. An Identifier in a C-FIND request shall contain values to be matched against the Attributes of the Entities in a Worklist Information Model. For any worklist request, the set of entities for which Attributes are returned, shall be determined by the set of Matching and Return Key Attributes specified in the Identifier.

K.2.2.1 Attribute Types

All Attributes of entities in a Worklist Information Model shall be specified both as a Matching Key Attribute (either required or optional) and as a Return Key Attribute.

K.2.2.1.1 Matching Key Attributes

The Matching Key Attributes are Keys, which select worklist items to be included in a requested Worklist.

K.2.2.1.1.1 Required Matching Key Attributes

A Basic Worklist Management SCP shall support matching based on values of all Required Matching Key Attributes of the C-FIND request. Multiple entities may match a given value for a Required Key.

If an SCP manages an entity with an unknown Attribute value (i.e. zero length), the unknown value shall fail to match any Matching Key value.

Notes: 1. Even though there is no means to perform matching on such entities, they may be queried as a Return Key Attribute using a C-FIND request with a zero length value (universal match) or by a single wildcard (wildcard match).

2. An SCU may choose to supply any subset of Required Matching Key Attributes.

K.2.2.1.1.2 Optional Matching Key Attributes

In the Worklist Information Model, a set of Attributes may be defined as Optional Matching Key Attributes. Optional Matching Key Attributes contained in the Identifier of a C-FIND request may induce two different types of behavior depending on support for matching by the SCP. If the SCP

— does not support matching on the Optional Matching Key Attribute, then the Optional Matching Key Attribute shall be ignored for matching but shall be processed in the same manner as a Return Key Attribute.

— supports matching of the Optional Matching Key Attribute, then the Optional Matching Key Attribute shall be processed in the same manner as a Required Matching Key.

Notes: 1. The Conformance Statement of the SCP lists the Optional Matching Key Attributes which are supported for matching.

2. An SCU can not expect the SCP to support a match on an Optional Matching Key.

K.2.2.1.2 Return Key Attributes

The values of Return Key Attributes to be retrieved with the Worklist are specified with zero-length (universal matching) in the C-FIND request. SCPs shall support Return Key Attributes

Provided by IHS
No reproduction or networking permitted without license from IHS
Not for Resale

defined by a Worklist Information Model according to the Data Element Type (1, 1C, 2, 2C, 3) as defined in PS 3.5.

Every Matching Key Attribute shall also be considered as a Return Key Attribute. Therefore the C-FIND response shall contain in addition to the values of the requested Return Key Attributes the values of the requested Matching Key Attributes.

Notes: 1 The Conformance Statement of the SCP lists the Return Key Attributes of Type 3, which are supported.

2. An SCU may choose to supply any subset of Return Key Attributes.

3. An SCU can not expect to receive any Type 3 Return Key Attributes.

4. Return Key attributes with VR of SQ may be specified either with zero-length or with the zero-length item in the sequence.

K.2.2.2 Attribute Matching

The following types of matching, which are defined by the Query/Retrieve Service Class in Annex C may be performed on Matching Key Attributes in the Basic Worklist Service Class. Different Matching Key Attributes may be subject for different matching types. The Worklist Information Model defines the type of matching for each Required Matching Key Attribute. The Conformance Statement of the SCP shall define the type of matching for each Optional Matching Key Attribute. The types of matching are:

- Single Value Matching
- List of UID Matching
- Wild Card Matching
- Range Matching
- Sequence Matching

The following type of matching, which is defined by the Query/Retrieve Service Class in Annex C of this Part shall be performed on Return Key Attributes in the Basic Worklist Service Class.

- Universal Matching

See Section C.2.2.2 and subsections for specific rules governing of Matching Key Attribute encoding for and performing of different types of matching.

The Specific Character Set (0008,0005) Attribute may be present in the Identifier but is never matched, i.e., it is not considered a Matching Key Attribute. See Section C.2.2.2 for details.

K.2.2.3 Matching Multiple Values

When matching an Attribute which has a value multiplicity of greater than one, if any of the values match, then all values shall be returned.

K.3 WORKLIST INFORMATION MODEL

Each Worklist Information Model is associated with one SOP Class. The following Worklist Information Model is defined:

- Modality Worklist Information Model
- General Purpose Worklist Information Model

K.4 DIMSE-C SERVICE GROUP

One DIMSE-C Service is used in the construction of SOP Classes of the Basic Worklist Management Service Class. The following DIMSE-C operation is used.

Provided by IHS
No reproduction or networking permitted without license from IHS Not for Resale

— C-FIND

K.4.1 C-FIND Operation

SCPs of some SOP Classes of the Basic Worklist Management Service Class are capable of processing queries using the C-FIND operation as described in PS 3.7. The C-FIND operation is the mechanism by which queries are performed. Matches against the keys present in the Identifier are returned in C-FIND responses.

K.4.1.1 C-FIND Service Parameters

K.4.1.1.1 SOP Class UID

The SOP Class UID identifies the Worklist Information Model against which the C-FIND is to be performed. Support for the SOP Class UID is implied by the Abstract Syntax UID of the Presentation Context used by this C-FIND operation.

K.4.1.1.2 Priority

The Priority Attribute defines the requested priority of the C-FIND operation with respect to other DIMSE operations being performed by the same SCP.

Processing of priority requests is not required of SCPs. Whether or not an SCP supports priority processing and the meaning of the different priority levels shall be stated in the Conformance Statement of the SCP.

K.4.1.1.3 Identifier

Both the C-FIND request and response contain an Identifier encoded as a Data Set (see PS 3.5).

K.4.1.1.3.1 Request Identifier Structure

An Identifier in a C-FIND request shall contain

— Key Attributes values to be matched against the values of Attributes specified in that SOP Class.
— Conditionally, the Attribute Specific Character Set (0008,0005). This Attribute shall be included if expanded or replacement character sets may be used in any of the Attributes in the Request Identifier. It shall not be included otherwise.

Note: This means that Specific Character Set (0008,0005) is included if the SCU supports expanded or replacement character sets in the context of this service. It will not be included if expanded or replacement character sets are not supported by the SCU.

The Key Attributes and values allowable for the query shall be defined in the SOP Class definition for the corresponding Worklist Information Model.

K.4.1.1.3.2 Response Identifier Structure

The C-FIND response shall not contain Attributes that were not in the request or specified in this section.

An Identifier in a C-FIND response shall contain:

— Key Attributes with values corresponding to Key Attributes contained in the Identifier of the request (Key Attributes as defined in K.2.2.1.)
— Conditionally, the Attribute Specific Character Set (0008,0005). This Attribute shall be included if expanded or replacement character sets may be used in any of the Attributes in the Response Identifier. It shall not be included otherwise. The C-FIND SCP is not required to return responses in the Specific Character Set requested by the SCU if that

--`,,```,,,,````-`-`,,`,,`,`,,`---

Provided by IHS
No reproduction or networking permitted without license from IHS Not for Resale

character set is not supported by the SCP. The SCP may return responses with a different Specific Character Set.

Note: This means that Specific Character Set (0008,0005) is included if the SCP supports expanded or replacement character sets in the context of this service. It will not be included if expanded or replacement character sets are not supported by the SCP.

— Conditionally, the Attribute HL7 Structured Document Reference Sequence (0040,A390) and its subsidiary Sequence Items. This Attribute shall be included if HL7 Structured Documents are referenced within the Identifier, e.g., in the Pertinent Documents Sequence (0038,0100).

K.4.1.1.4 Status

Table K.4.-1 defines the status code values which might be returned in a C-FIND response. Fields related to status code values are defined in PS 3.7.

Table K.4-1
C-FIND RESPONSE STATUS VALUES

Service Status	Further Meaning	Status Codes	Related Fields
Failure	Refused: Out of Resources	A700	(0000,0902)
	Identifier Does Not Match SOP Class	A900	(0000,0901) (0000,0902)
	Unable to process	Cxxx	(0000,0901) (0000,0902)
Cancel	Matching terminated due to Cancel request	FE00	None
Success	Matching is complete - No final Identifier is supplied.	0000	None
Pending	Matches are continuing - Current Match is supplied and any Optional Keys were supported in the same manner as Required Keys.	FF00	Identifier
	Matches are continuing - Warning that one or more Optional Keys were not supported for existence for this Identifier.	FF01	Identifier

Note: Status Codes are returned in DIMSE response messages (See PS 3.7). The code values stated in column "Status Codes" are returned in Status Command Element (0000,0900).

K.4.1.2 C-FIND SCU Behavior

All C-FIND SCUs shall be capable of generating query requests which meet the requirements of the "Worklist" Search Method (see K.4.1.3.1).

Required Keys, and Optional Keys associated with the Worklist may be contained in the Identifier.

An SCU conveys the following semantics using the C-FIND requests and responses:

— The SCU requests that the SCP perform a match of all keys specified in the Identifier of the request against the information it possesses of the Worklist specified in the request.

— The SCU shall interpret Pending responses to convey the Attributes of a match of an Entity.

--`,,```,,,,````-`-`,,`,,`,`,,`---

Provided by IHS
No reproduction or networking permitted without license from IHS Not for Resale

— The SCU shall interpret a response with a status equal to Success, Failed, Refused or Cancel to convey the end of Pending responses.
— The SCU shall interpret a Refused or Failed response to a C-FIND request as an indication that the SCP is unable to process the request.
— The SCU may cancel the C-FIND service by issuing a C-FIND-CANCEL request at any time during the processing of the C-FIND. The SCU shall recognize a status of Cancel to indicate that the C-FIND-CANCEL was successful.

K.4.1.3 C-FIND SCP Behavior

All C-FIND SCPs shall be capable of processing queries which meet the requirements of the "Worklist" Search (see K.4.1.3.1).

An SCP conveys the following semantics using the C-FIND requests and responses:

— The SCP is requested to perform a match of all the keys specified in the Identifier of the request, against the information it possesses. Attribute matching is performed using the key values specified in the Identifier of the C-FIND request as defined in Section K.2.
— The SCP generates a C-FIND response for each match using the "Worklist" Search method. All such responses shall contain an Identifier whose Attributes contain values from a single match. All such responses shall contain a status of Pending.
— When all matches have been sent, the SCP generates a C-FIND response which contains a status of Success. A status of Success shall indicate that a response has been sent for each match known to the SCP.

Notes: 1. No ID is contained in a response with a status of Success. For a complete definition, see PS 3.7.

2. When there are no matches, then no responses with a status of Pending are sent, only a single response with a status of Success.

— The SCP shall generate a response with a status of Refused or Failed if it is unable to process the request. A Refused or Failed response shall contain no Identifier.
— If the SCP receives C-FIND-CANCEL indication before it has completed the processing of the matches it shall interrupt the matching process and return a status of Cancel.

K.4.1.3.1 "Worklist" Search Method

The following procedure is used to generate matches.

The key match strings contained in the Identifier of the C-FIND request are matched against the values of the Key Attributes for each worklist entity. For each entity for which the Attributes match all of the specified match strings, construct an Identifier. This Identifier shall contain all of the values of the Attributes for this entity which match those in the C-FIND request. Return a response for each such Identifier. If there are no matching keys, then there are no matches, return a response with a status equal to Success and with no Identifier.

K.5 ASSOCIATION NEGOTIATION

Association establishment is the first phase of any instance of communication between peer DICOM AEs. The Association negotiation procedure specified in PS 3.7 shall be used to negotiate the supported SOP Classes or Meta SOP Classes.

Support for the SCP/SCU role selection negotiation is optional. The SOP Class Extended Negotiation shall not be supported.

--`,,```,,,,````-`-`,,`,,`,`,,`---

Provided by IHS
No reproduction or networking permitted without license from IHS Not for Resale

K.6 SOP CLASS DEFINITIONS

K.6.1 Modality Worklist SOP Class

K.6.1.1 Modality Worklist SOP Class Overview

The Modality Worklist SOP class defined within the Basic Worklist Management Service Class defines an application-level class of service which facilitates the communication of information to the imaging modality about Scheduled Procedure Steps, and entities related to the Scheduled Procedure Steps. As will be detailed below, part of the information carried by the worklist mechanism is intended to be used by the imaging modality itself, but much of the information is intended to be presented to the modality operator.

This worklist is structured according to Scheduled Procedure Steps. A procedure step is a unit of service in the context of a requested imaging procedure.

The Modality Worklist SOP class supports the following requirements:

- Verify patient (e.g. download patient demographic information from IS to Modality, to verify that the person to be examined is the intended subject).
- Select a Scheduled Procedure Step from the IS (e.g. download procedure step information from the IS to the Modality). The Modality Worklist SOP Class supports two alternatives for the realization of this requirement, supporting different organization methods of the department:
  - The Modality may obtain the list of Scheduled Procedure Steps from the IS. Display of the list and selection from the list is done at the Modality.
  - The list is displayed and selection is performed on the IS. This implies, that the information is obtained by the Modality just before the Scheduled Procedure Step starts.
- Prepare the performance of a Scheduled Procedure Step.
- Couple DICOM images unambiguously with related information from the IS (e.g. patient demographics, procedure description, ID data structure from the IS, contextual IS information).
- Capture all the attributes from the IS, that are mandatory to be inserted into the DICOM Image Object

The Modality Worklist SOP Class is not intended to provide access to all IS information and services which may be of interest to a Modality operator or attending physician. Its primary focus is the efficient operation of the image acquisition equipment. DICOM SOP Classes such as the existing Detached Patient Management SOP Class and non-DICOM Services which fall beyond the scope of the Modality Worklist SOP Class may be needed.

The Modality Worklist SOP Class does not support the transmission of information from the Modality to the information system.

K.6.1.2 Modality Worklist Information Model

K.6.1.2.1 E/R Model

In response to a given C-FIND request, the SCP might have to send several C-FIND responses, (i.e. one C-FIND response per matching worklist item). Each worklist item focuses on one Scheduled Procedure Step and the related information. The E-R diagram presented in Figure K.6-1 depicts the content of one C-FIND request, that is:

- the matching Scheduled Procedure Step, the Requested Procedure to which the Scheduled Procedure Step contributes, the Imaging Service Request in which the associated Requested Procedure is ordered, any associated Visit, and the Patient who is to be the subject of the Procedure.

--`,,```,,,,````-`-`,,`,,`,`,,`---

Provided by IHS
No reproduction or networking permitted without license from IHS Not for Resale

Therefore, for a given C-FIND request, a given Scheduled Procedure Step will appear in only one of the resulting C-FIND responses. Obviously, information about the Requested Procedure, Imaging Service Request, Visit and Patient may be mentioned in several of these C-FIND responses.

The Modality Worklist Information Model is represented by the Entity Relationship diagram shown in figure K.6 -1.

Note: The entities appearing in messages related to the Modality Worklist SOP Class are required to comply to the Modality Worklist model. However, DICOM does not define the internal structure of the database.

The entry point of the Modality Worklist is the Scheduled Procedure Step entity.

The attributes of a Scheduled Procedure Step Worklist can be found in the following Modules in PS 3.3.

- Patient Relationship Module
- Patient Identification Module
- Patient Demographic Module
- Patient Medical Module
- Visit Relationship Module
- Visit Identification Module
- Visit Status Module
- Visit Admission Module
- Scheduled Procedure Step Module
- Requested Procedure Module
- Imaging Service Request Module

Provided by IHS
No reproduction or networking permitted without license from IHS
Not for Resale

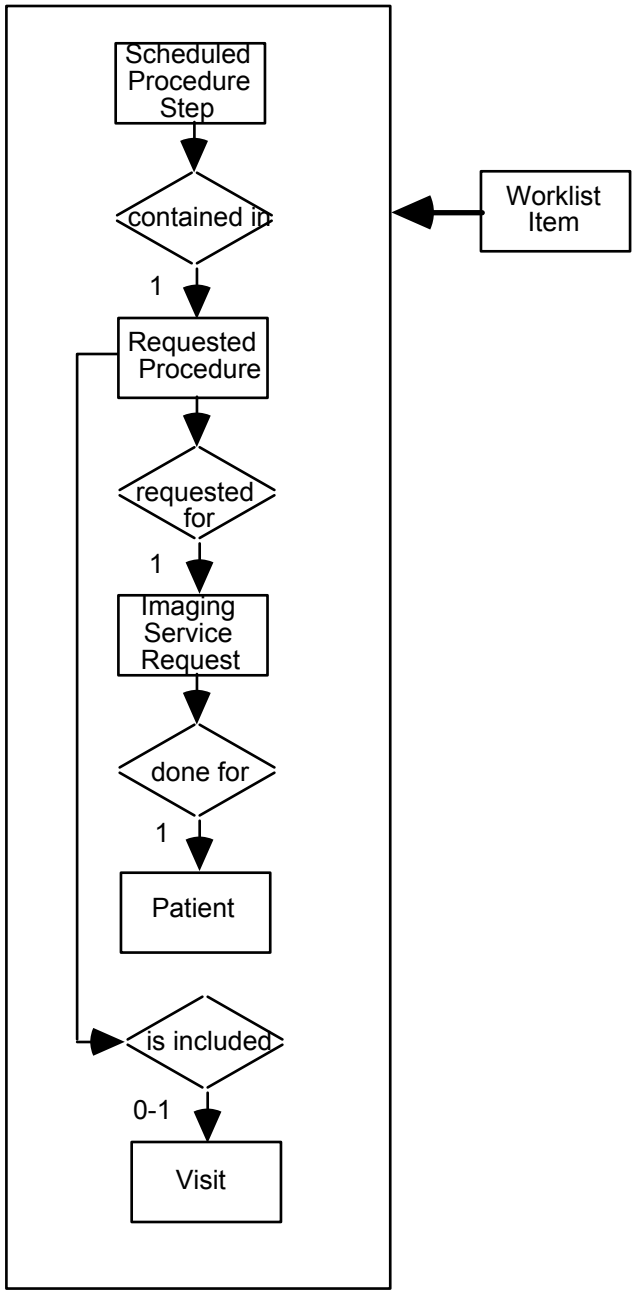

Figure K.6-1
MODALITY WORKLIST INFORMATION MODEL E/R DIAGRAM

K.6.1.2.2 Modality Worklist Attributes

Table K.6-1 defines the Attributes of the Modality Worklist Information Model:

Provided by IHS
No reproduction or networking permitted without license from IHS
Not for Resale

Table K.6-1
ATTRIBUTES FOR THE MODALITY WORKLIST INFORMATION MODEL

Description / Module	Tag	Matching Key Type	Return Key Type	Remark/Matching Type
Scheduled Procedure Step				
Scheduled Procedure Step Sequence	(0040,0100)	R	1	The Attributes of the Scheduled Procedure Step shall only be retrieved with Sequence Matching. The Scheduled Procedure Step Sequence shall contain only a single Item.
>Scheduled Station AE Title	(0040,0001)	R	1	The Scheduled station AE title shall be retrieved with Single Value Matching only.
>Scheduled Procedure Step Start Date	(0040,0002)	R	1	Scheduled Step Start Date shall be retrieved with Single Value Matching or Range Matching. See remark under Scheduled Procedure Step Start Time (0040,0003).
>Scheduled Procedure Step Start Time	(0040,0003)	R	1	Scheduled Step Start Time shall be retrieved with Single Value Matching or Range Matching. Scheduled Step Start Date and Scheduled Step Start Time are subject to Range Matching. If both keys are specified for Range Matching, e.g. the date range July 5 to July 7 and the time range 10am to 6pm specifies the time period starting on July 5, 10am until July 7, 6pm. Note: If the Information System does not provide scheduling for individual Procedure Steps, it may use the closest scheduling information it possesses (e.g. Procedures are subject to scheduling instead of Procedure Steps).
>Modality	(0008,0060)	R	1	The Modality shall be retrieved with Single Value Matching.
>Scheduled Performing Physician's Name	(0040,0006)	R	2	Scheduled Performing Physician's Name shall be retrieved with Single Value Matching or Wild Card Matching.
>Scheduled Procedure Step Description	(0040,0007)	O	1C	Either the Scheduled Procedure Step Description (0040,0007) or the Scheduled Protocol Code Sequence (0040,0008) or both

Provided by IHS
No reproduction or networking permitted without license from IHS
Not for Resale

				shall be supported by the SCP.
>Scheduled Station Name	(0040,0010)	O	2	
>Scheduled Procedure Step Location	(0040,0011)	O	2	
>Scheduled Protocol Code Sequence	(0040,0008)	O	1C	Either the Scheduled Procedure Step Description (0040,0007) or the Scheduled Protocol Code Sequence (0040,0008) or both shall be supported by the SCP. The Scheduled Protocol Code Sequence contains one or more Items.
>>Code Value	(0008,0100)	O	1C	Required if a Sequence Item is present.
>>Coding Scheme Version	(0008,0103)	O	3	
>>Coding Scheme Designator	(0008,0102)	O	1C	Required if a Sequence Item is present.
>>Code Meaning	(0008,0104)	O	3	
>>Protocol Context Sequence	(0040,0440)	-	3	The Protocol Context Sequence and its Items shall not be used for matching
>>>Value Type	(0040,A040)	-	1	
>>>Concept Name Code Sequence	(0040,A043)	-	1	
>>>>Code Value	(0008,0100)	-	1	
>>>>Coding Scheme Designator	(0008,0102)	-	1	
>>>>Coding Scheme Version	(0008,0103)	-	3	
>>>>Code Meaning	(0008,0104)	-	1	
>>>DateTime	(0040,A120)	-	1C	Required if Value Type (0040,A040) is DATETIME.
>>>Person Name	(0040,A123)	-	1C	Required if Value Type (0040,A040) is PNAME.
>>>Text Value	(0040,A160)	-	1C	Required if Value Type (0040,A040) is TEXT.
>>>Concept Code Sequence	(0040,A168)	-	1C	Required if Value Type (0040,A040) is CODE.
>>>>Code Value	(0008,0100)	-	1	
>>>>Coding Scheme Designator	(0008,0102)	-	1	
>>>>Coding Scheme Version	(0008,0103)	-	3	
>>>>Code Meaning	(0008,0104)	-	1	
>>>Numeric Value	(0040,A30A)	-	1C	Required if Value Type (0040,A040) is NUMERIC.

Provided by IHS
No reproduction or networking permitted without license from IHS
Not for Resale

>>>Measurement Units Code Sequence	(0040,08EA)	-	1C	Required if Value Type (0040,A040) is NUMERIC.
>>>>Code Value	(0008,0100)	-	1	
>>>>Coding Scheme Designator	(0008,0102)	-	1	
>>>>Coding Scheme Version	(0008,0103)	-	3	
>>>>Code Meaning	(0008,0104)	-	1	
>>>All other attributes from Protocol Context Sequence		-	3	
>Pre-Medication	(0040,0012)	O	2C	Required if Pre-Medication is to be applied to that Scheduled Procedure Step.
>Scheduled Procedure Step ID	(0040,0009)	O	1	
>Requested Contrast Agent	(0032,1070)	O	2C	Required if Contrast Media is to be applied to that Scheduled Procedure Step.
>Scheduled Procedure Step Status	(0040,0020)	O	3	
>All other Attributes from the Scheduled Procedure Step Module		O	3	
Requested Procedure				
Requested Procedure ID	(0040,1001)	O	1	
Requested Procedure Description	(0032,1060)	O	1C	The Requested Procedure Description (0032,1060) or the Requested Procedure Code Sequence (0032,1064) or both shall be supported by the SCP.
Requested Procedure Code Sequence	(0032,1064)	O	1C	The Requested Procedure Description (0032,1060) or the Requested Procedure Code Sequence (0032,1064) or both shall be supported by the SCP. The Requested Procedure Code Sequence shall contain only a single Item.
>Code Value	(0008,0100)	O	1C	Required if a Sequence Item is present.
>Coding Scheme Designator	(0008,0102)	O	1C	Required if a Sequence Item is present.
>Coding Scheme Version	(0008,0103)	O	3	
>Code Meaning	(0008,0104)	O	3	
Study Instance UID	(0020,000D)	O	1	
Referenced Study Sequence	(0008,1110)	O	2	

Provided by IHS
No reproduction or networking permitted without license from IHS
Not for Resale

>Referenced SOP Class UID	(0008,1150)	O	1C	Required if a Sequence Item is present.
>Referenced SOP Instance UID	(0008,1155)	O	1C	Required if a Sequence Item is present.
Requested Procedure Priority	(0040,1003)	O	2	
Patient Transport Arrangements	(0040,1004)	O	2	
All other Attributes from the Requested Procedure Module		O	3	
Imaging Service Request				
Accession Number	(0008,0050)	O	2	
Requesting Physician	(0032,1032)	O	2	
Referring Physician's Name	(0008,0090)	O	2	
All other Attributes from the Imaging Service Request Module		O	3	
Visit Identification				
Admission ID	(0038,0010)	O	2	
All other Attributes from the Visit Identification Module		O	3	
Visit Status				
Current Patient Location	(0038,0300)	O	2	
All other Attributes from the Visit Status Module		O	3	
Visit Relationship				
Referenced Patient Sequence	(0008,1120)	O	2	
>Referenced SOP Class UID	(0008,1150)	O	1C	Required if a Sequence Item is present.
>Referenced SOP Instance UID	(0008,1155)	O	1C	Required if a Sequence Item is present.
All other Attributes from the Visit Relationship Module exc ept those explicitly included in this table (see Note 3)		O	3	
Visit Admission				
All Attributes from the Visit Admission Module		O	3	
Patient Relationship				
All Attributes from the Patient Relationship Module exc ept those explicitly included in this table (see		O	3	

Provided by IHS
No reproduction or networking permitted without license from IHS
Not for Resale

Note 3)				
Patient Identification				
Patient's Name	(0010,0010)	R	1	Patient Name shall be retrieved with Single Value Matching or Wild Card Matching.
Patient ID	(0010,0020)	R	1	Patient ID shall be retrieved with Single Value Matching.
All other Attributes from the Patient Identification Module		O	3	
Patient Demographic				
Patients Birth Date	(0010,0030)	O	2	
Patient's Sex	(0010,0040)	O	2	
Patient's Primary Language Code Sequence	(0010,0101)	O	3	The languages which can be used to communicate with the patient. If returned, the Patient's Primary Language Code Sequence shall contain one or more Items. The items are ordered by preference (most preferred language to least preferred language).
>Code Value	(0008,0100)	O	1	
>Coding Scheme Designator	(0008,0102)	O	1	
>Code Meaning	(0008,0104)	-	1	Code Meaning shall not be used as Matching Key.
>Patient's Primary Language Code Modifier Sequence	(0010,0102)	O	3	A modifier for a Patient's Primary Language. Can be used to specify a national language variant. If returned, the Patient's Primary Language Code Modifier Sequence shall contain only a single Item.
>>Code Value	(0008,0100)	O	1	
>>Coding Scheme Designator	(0008,0102)	O	1	
>>Code Meaning	(0008,0104)	-	1	Code Meaning shall not be used as Matching Key.
Patient's Weight	(0010,1030)	O	2	
Confidentiality constraint on patient data	(0040,3001)	O	2	
All other Attributes from the Patient Demographic Module		O	3	
Patient Medical				
Patient State	(0038,0500)	O	2	
Pregnancy Status	(0010,21C0)	O	2	
Medical Alerts	(0010,2000)	O	2	

Provided by IHS
No reproduction or networking permitted without license from IHS
Not for Resale

Contrast Allergies	(0010,2110)	O	2	
Special Needs	(0038,0050)	O	2	
Pertinent Documents Sequence	(0038,0100)	O	3	Pertinent Documents Sequence shall be retrieved with Universal Matching only
>Referenced SOP Class UID	(0008,1150)	-	1	
>Referenced SOP Instance UID	(0008,1155)	-	1	
>Purpose of Reference Code Sequence	(0040,A170)	-	2	
>>Code Value	(0008,0100)	-	1	
>>Coding Scheme Designator	(0008,0102)	-	1	
>>Code Meaning	(0008,0104)	-	1	
>Document Title	(0042,0010)	-	2	
All other Attributes from the Patient Medical Module		O	3	

Notes: 1. Just like Series and Image Entities specified in the Query/Retrieve Service Class either an SCU or an SCP may support optional Matching Key Attributes and/or Type 3 Return Key Attributes which are not included in the Worklist Information Model (i.e. standard or private attributes). This is considered a Standard Extended SOP Class (see PS 3.2).

2. Each Module contains a Comment Attribute. This may be used to transmit non-structured information, which may be displayed to the operator of the Modality.

3. The reason for this exclusion is to assure that the attributes that may be present in multiple modules are included only once with the meaning pertaining to only one module (for example, Referenced Study Sequence (0008,1110) shall be included once with the meaning as defined in the Requested Procedure Module).

4. The use of Specific Character Set is discussed in section K.4.1.1.3.1 and K.4.1.1.3.2.

The attributes in Table K.6-1a are not part of the Worklist Information Model; their inclusion in the C-FIND request and response identifier are governed by rules in sections K.4.1.1.3.1 and K.4.1.1.3.2, respectively.

Table K.6-1a
ATTRIBUTES FOR THE MODALITY WORKLIST C-FIND IDENTIFIER

Description	Tag	Request Identifier	Response Identifier	Remark Type
Specific Character Set	(0008,0005)	1C	1C	This attribute is required if expanded or replacement character sets are used. See C.2.2.2 and K.4.1.1.3
HL7 Structured Document Reference Sequence	(0040,A390)	-	1C	One or more Items may be included in this sequence. Required if HL7 Structured Documents are referenced within the Identifier. See K.4.1.1.3

Provided by IHS
No reproduction or networking permitted without license from IHS
Not for Resale

>Referenced SOP Class UID	(0008,1150)	-	1	
>Referenced SOP Instance UID	(0008,1155)	-	1	
>HL7 Instance Identifier	(0040,E001)	-	1	
>Retrieve URI	(0040,E010)	-	3	

K.6.1.3 Conformance Requirements

An implementation may conform to the Modality Worklist SOP Class as an SCU or an SCP. The Conformance Statement shall be in the format defined in PS 3.2.

K.6.1.3.1 SCU Conformance

An implementation which conforms to the Modality Worklist SOP Class shall support queries against the Worklist Information Model described in Section K.6.1.2 of this Annex using the baseline C-FIND SCU Behavior described in Section K.4.1.2 of this Part.

An implementation which conforms to the Modality Worklist SOP Class as an SCU shall state in its Conformance Statement whether it requests matching on Optional Matching Key Attributes. If it requests Type 3 Return Key Attributes, then it shall list these Optional Return Key Attributes. It shall identify any Templates it supports for the Protocol Context Sequence.

An implementation which conforms to the Modality Worklist SOP Class as an SCU shall state in its Conformance Statement how it makes use of Specific Character Set (0008,0005) when encoding queries and interpreting responses.

K.6.1.3.2 SCP Conformance

An implementation which conforms to the Modality Worklist SOP Class shall support queries against the Worklist Information Model described in Section K.6.1.2 of this Annex using the C-FIND SCP Behavior described in Section K.4.1.3 of this Part.

An implementation which conforms to the Modality Worklist SOP Class as an SCP shall state in its Conformance Statement whether it supports matching on Optional Matching Key Attributes. If it supports Type 3 Return Key Attributes, then it shall list the Optional Return Key Attributes that it supports. It shall identify any Templates it supports for the Protocol Context Sequence.

An implementation which conforms to the Modality Worklist SOP Class as an SCP shall state in its Conformance Statement whether it supports case-insensitive matching for PN VR attributes and list attributes for which this applies.

An implementation which conforms to the Modality Worklist SOP Class as an SCP shall state in its Conformance Statement how it makes use of Specific Character Set (0008,0005) when interpreting queries, performing matching and encoding responses.

K.6.1.4 SOP Class

The Modality Worklist SOP Class in the Basic Worklist Service Class identify the Modality Worklist Information Model, and the DIMSE-C operations supported. The following Standard SOP Class is identified:

SOP Class Name	SOP Class UID
Modality Worklist Information Model - FIND	1.2.840.10008.5.1.4.31

Provided by IHS
No reproduction or networking permitted without license from IHS
Not for Resale

K.6.2 General Purpose Worklist SOP Class

K.6.2.1 General Purpose Worklist SOP Class Overview

The General Purpose Worklist SOP class defined within the Basic Worklist Management Service Class defines an application-level class of service which facilitates the communication of information to any application or piece of equipment about General Purpose Scheduled Procedure Steps and related entities. As will be detailed below, part of the information carried by the worklist mechanism is intended to be used by the application itself, and much of the information is intended to be presented to the person performing the task. In automated applications all information will go to the application.

The worklist is a list of General Purpose Scheduled Procedure Steps, i.e. each worklist item focuses on a single procedure step and the related entities. The General Purpose Worklist SOP Class covers a wide range of tasks, and the related entities may differ dependent upon the specifics of the procedure step to be performed. For example, the General Purpose Worklist may be used to schedule procedure steps for the following tasks:

- Image Processing
- Quality Control
- Computer Aided Diagnosis
- Computer Aided Detection
- Interpretation
- Transcription
- Report Verification
- Print

The detailed actions for the specific task will be conveyed by means of Workitem Codes. The related entities, i.e. the input information the performer needs to do the task and the output information the performer has to produce, may be conditionally present based on the specific Workitem Code.
Examples of these entities are: Images, Historic Images, (Structured) Reports, Films, Presentation States, Audio recordings, Requested Procedure text.

The General Purpose Worklist SOP Class is not intended to provide access to all IS information and services which may be of interest to an application operator. Its primary focus is the efficient operation of the processing application. Other DICOM SOP Classes such as the Performed Procedure Step SOP Classes, as well as non-DICOM services may be needed in conjunction with this SOP Class.

The General Purpose Worklist SOP Class does not support the communication of information from the application to the worklist provider. The General Purpose Scheduled Procedure Step, General Purpose Performed Procedure Step and other DICOM services in the Study Management Service Class section are defined to support that communication.

K.6.2.2 General Purpose Worklist Information Model

K.6.2.2.1 E/R Model

In response to a given C-FIND request, the General Purpose Worklist SCP might have to send several C-FIND responses, (i.e. one C-FIND response per matching worklist item). Each worklist item focuses on a single General Purpose Scheduled Procedure Step and the related

--`,,```,,,,````-`-`,,`,,`,`,,`---

Provided by IHS
No reproduction or networking permitted without license from IHS Not for Resale

information. The E-R diagram presented in Figure K.6-2 depicts the content of one C-FIND request, that is:

- the matching General Purpose Scheduled Procedure Step, the list of Requested Procedures to which the General Purpose Scheduled Procedure Step contributes, the Imaging Service Request(s) in which the associated Requested Procedures are ordered, and the Patient of interest.

Therefore, for a given C-FIND request, a given General Purpose Scheduled Procedure Step will appear in only one of the resulting C-FIND responses. Obviously, information about the Requested Procedures, Imaging Service Requests, and Patients may be mentioned in several of these C-FIND responses.

In the Entity-Relationship Model, one Attribute shall be defined as the Unique Key for the General Purpose Scheduled Procedure Step. A single value in a Unique Key Attribute shall uniquely identify a single entity. That is, two entities may not have the same Unique Key value.

Note: The Unique Key in this case is the SOP Instance UID of the General Purpose Scheduled Procedure Step Instance. See Table K.6-2.

The worklist provider shall support existence and matching of the Unique Key defined by the General Purpose Worklist Information Model. All entities managed by the worklist provider shall have a specific non-zero length Unique Key value.

Unique Keys may be contained in the Identifier of a C-FIND request.

The General Purpose Worklist Information Model is represented by the Entity Relationship diagram shown in figure K.6-2.

The entry point of the General Purpose Worklist is the General Purpose Scheduled Procedure Step entity.

The attributes of a General Purpose Worklist can be found in

- PS 3.3 "Patient Relationship Module"
- PS 3.3 "Patient Identification Module"
- PS 3.3 "Patient Demographic Module"
- PS 3.3 "Patient Medical Module"
- PS 3.3 "General Purpose Scheduled Procedure Step Relationship Module"
- PS 3.3 "General Purpose Scheduled Procedure Step Information Module"

Provided by IHS
No reproduction or networking permitted without license from IHS
Not for Resale

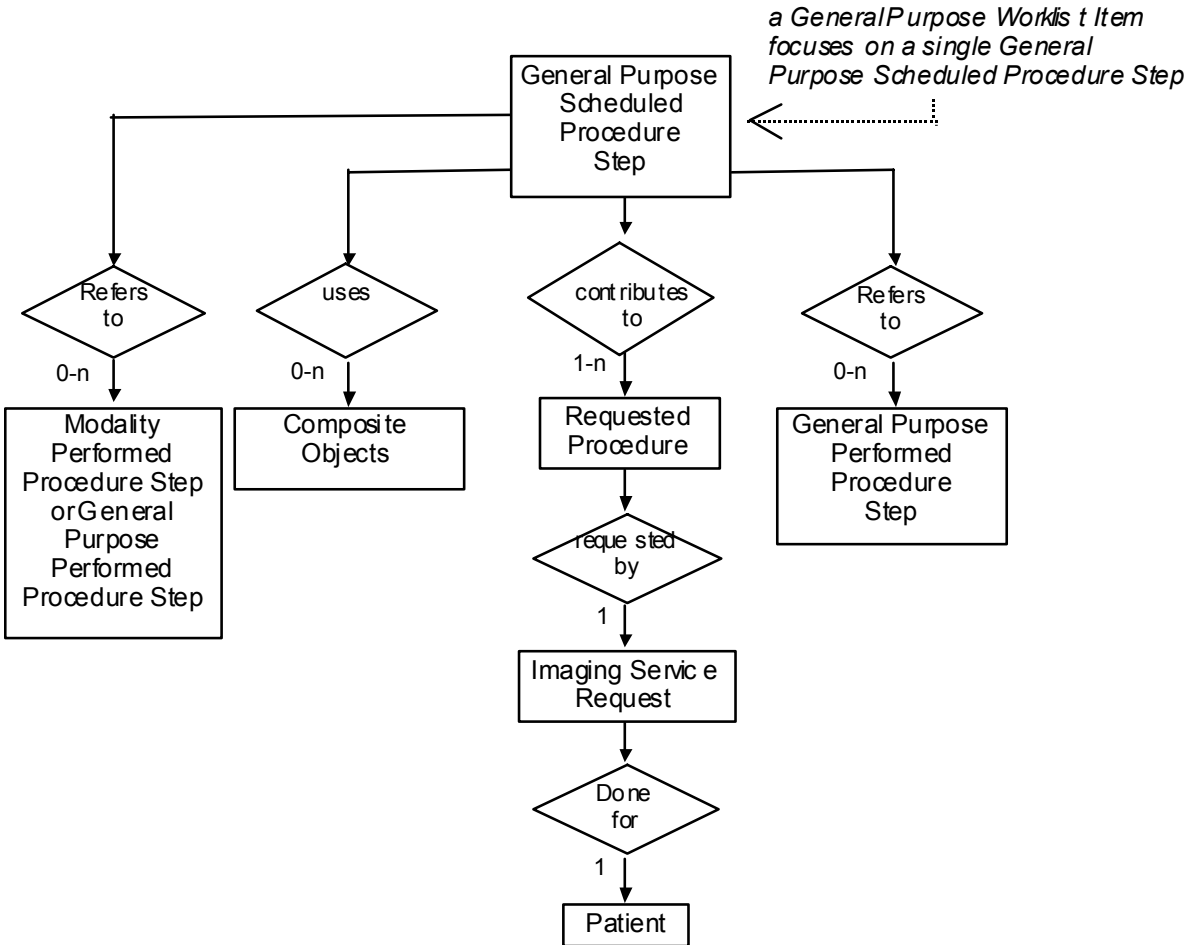

Figure K.6-2.
General Purpose Worklist Information Model E-R Diagram

K.6.2.2.2 General Purpose Worklist Attributes

Table K.6-2 defines the Attributes of the General Purpose Worklist Information Model:

Table K.6-2 Attributes for the General Purpose Worklist Information Model

Description / Module	Tag	Matching Key Type	Return Key Type	Remark / Matching Type
SOP Common				
SOP Class UID	(0008,0016)	O	1	Uniquely identifies the SOP Class of the General Purpose Scheduled Procedure Step. See Section K.6.2.2.3 for further explanation.
SOP Instance UID	(0008,0018)	U	1	Uniquely identifies the SOP Instance of the General Purpose Scheduled Procedure Step. See Section K.6.2.2.3 for further

Provided by IHS
No reproduction or networking permitted without license from IHS
Not for Resale

				explanation. SOP Instance UID shall be retrieved with Single Value Matching.
General Purpose Scheduled Procedure Step Information				
General Purpose Scheduled Procedure Step Status	(0040,4001)	R	1	General Purpose Scheduled Procedure Step Status shall be retrieved with Single Value Matching.
Input Availability Flag	(0040,4020)	R	1	Input Availability Flag shall be retrieved with Single Value Matching.
General Purpose Scheduled Procedure Step Priority	(0040,4003)	R	1	General Purpose Scheduled Procedure Step Priority shall be retrieved with Single Value Matching.
Scheduled Procedure Step ID	(0040,0009)	O	1	
Scheduled Procedure Step Modification Date and Time	(0040,4010)	O	3	Scheduled Procedure Step Modification Date and Time shall be retrieved with Single Value Matching or Range Matching.
Scheduled Workitem Code Sequence	(0040,4018)	R	1	The Attributes of the Scheduled Workitem Code Sequence shall only be retrieved with Sequence Matching. The Scheduled Workitem Code Sequence shall contain only a single Item.
>Code Value	(0008,0100)	R	1	Code Value shall be retrieved with Single Value Matching.
>Coding Scheme Designator	(0008,0102)	R	1	Coding Scheme Designator shall be retrieved with Single Value Matching.
>Code Meaning	(0008,0104)	-	1	Code Meaning shall not be used as Matching Key.
Scheduled Processing Applications Code Sequence	(0040,4004)	O	2	
>Code Value	(0008,0100)	O	1	
>Coding Scheme Designator	(0008,0102)	O	1	
>Code Meaning	(0008,0104)	-	1	Code Meaning shall not be used as Matching Key.
Scheduled Station Name Code Sequence	(0040,4025)	R	2	The Attributes of the Scheduled Station Name Code Sequence shall only be retrieved with Sequence Matching.
>Code Value	(0008,0100)	R	1	Code Value shall be retrieved with Single Value Matching.
>Coding Scheme Designator	(0008,0102)	R	1	Coding Scheme Designator shall be retrieved with Single Value Matching.

--`,,```,,,,````-`-`,,`,,`,`,,`---

Provided by IHS
No reproduction or networking permitted without license from IHS
Not for Resale

>Code Meaning	(0008,0104)	-	1	Code Meaning shall not be used as Matching Key.
Scheduled Station Class Code Sequence	(0040,4026)	R	2	The Attributes of the Scheduled Station Class Code Sequence shall only be retrieved with Sequence Matching.
>Code Value	(0008,0100)	R	1	Code Value shall be retrieved with Single Value Matching.
>Coding Scheme Designator	(0008,0102)	R	1	Coding Scheme Designator shall be retrieved with Single Value Matching.
>Code Meaning	(0008,0104)	-	1	Code Meaning shall not be used as Matching Key.
Scheduled Station Geographic Location Code Sequence	(0040,4027)	R	2	The Attributes of the Scheduled Station Geographic Location Code Sequence shall only be retrieved with Sequence Matching.
>Code Value	(0008,0100)	R	1	Code Value shall be retrieved with Single Value Matching.
>Coding Scheme Designator	(0008,0102)	R	1	Coding Scheme Designator shall be retrieved with Single Value Matching.
>Code Meaning	(0008,0104)	-	1	Code Meaning shall not be used as Matching Key.
Scheduled Procedure Step Start Date and Time	(0040,4005)	R	1	Scheduled Procedure Step Start Date and Time shall be retrieved with Single Value Matching or Range Matching.
Expected Completion Date and Time	(0040,4011)	R	2	Expected Completion Date and Time shall be retrieved with Single Value Matching or Range Matching.
Scheduled Human Performers Sequence	(0040,4034)	R	2	The Attributes of the Scheduled Human Performers Sequence shall only be retrieved with Sequence Matching.
>Human Performer Code Sequence	(0040,4009)	R	1	The Attributes of the Scheduled Human Performers Code Sequence shall only be retrieved with Sequence Matching.
>>Code Value	(0008,0100)	R	1	Code Value shall be retrieved with Single Value Matching.
>>Coding Scheme Designator	(0008,0102)	R	1	Coding Scheme Designator shall be retrieved with Single Value Matching.
>>Code Meaning	(0008,0104)	-	1	Code Meaning shall not be used as Matching Key.
>Human Performer's Name	(0040,4037)	O	3	
>Human Performer's Organization	(0040,4036)	O	3	
Referenced Performed Procedure Step Sequence	(0008,1111)	O	2	

--`,,```,,,,````-`-`,,`,,`,`,,`---

Provided by IHS
No reproduction or networking permitted without license from IHS
Not for Resale

>Referenced SOP Class UID	(0008,1150)	O	1	
>Referenced SOP Instance UID	(0008,1155)	O	1	
Input Information Sequence	(0040,4021)	O	2	
>Study Instance UID	(0020,000D)	O	1	
>Referenced Series Sequence	(0008,1115)	O	1	
>>Series Instance UID	(0020,000E)	O	1	
>>Retrieve AE Title	(0008,0054)	O	2C	Shall not be present if Storage Media File-Set ID (0088,0130) or Storage Media File-Set UID (0088,0140) is present.
>>Storage Media File-Set ID	(0088,0130)	O	2C	Shall not be present if Retrieve AE Title (0008,0054) is present.
>>Storage Media File-Set UID	(0088,0140)	O	2C	Shall not be present if Retrieve AE Title (0008,0054) is present.
>>Referenced SOP Sequence	(0008,1199)	O	1	
>>>Referenced SOP Class UID	(0008,1150)	O	1	
>>>Referenced SOP Instance UID	(0008,1155)	O	1	
>>>Purpose of Reference Code Sequence	(0040,A170)	O	3	
>>>>Code Value	(0008,0100)	-	1	
>>>>Coding Scheme Designator	(0008,0102)	-	1	
>>>>Code Meaning	(0008,0104)	-	1	
Relevant Information Sequence	(0040,4022)	O	2	
>Study Instance UID	(0020,000D)	O	1	
>Referenced Series Sequence	(0008,1115)	O	3	
>>Series Instance UID	(0020,000E)	O	1	
>>Retrieve AE Title	(0008,0054)	O	2C	Shall not be present if Storage Media File-Set ID (0088,0130) or Storage Media File-Set UID (0088,0140) is present.
>>Storage Media File-Set ID	(0088,0130)	O	2C	Shall not be present if Retrieve AE Title (0008,0054) is present.
>>Storage Media File-Set UID	(0088,0140)	O	2C	Shall not be present if Retrieve AE Title (0008,0054) is present.
>>Referenced SOP Sequence	(0008,1199)	O	1	
>>>Referenced SOP	(0008,1150)	O	1	

Provided by IHS
No reproduction or networking permitted without license from IHS
Not for Resale

Class UID				
>>>Referenced SOP Instance UID	(0008,1155)	O	1	
>>>Purpose of Reference Code Sequence	(0040,A170)	O	3	
>>>>Code Value	(0008,0100)	-	1	
>>>>Coding Scheme Designator	(0008,0102)	-	1	
>>>>Code Meaning	(0008,0104)	-	1	
Resulting General Purpose Performed Procedure Step Sequence	(0040,4015)	O	2	This sequence shall be updated when related General Purpose Performed Procedure Step SOP Instances are created.
>Referenced SOP Class UID	(0008,1150)	O	1	
>Referenced SOP Instance UID	(0008,1155)	O	1	
Actual Human Performers Sequence	(0040,4035)	O	2	This sequence shall be updated when this information is included in the Modify General Purpose Scheduled Procedure Step Information N-ACTION Request.
>Human Performer Code Sequence	(0040,4009)	O	1	
>>Code Value	(0008,0100)	O	1	
>>Coding Scheme Designator	(0008,0102)	O	1	
>>Code Meaning	(0008,0104)	-	1	Code Meaning shall not be used as Matching Key.
>Human Performer's Name	(0040,4037)	O	3	
>Human Performer's Organization	(0040,4036)	O	3	
Study Instance UID	(0020,000D)	O	1	This is the Study Instance UID that shall be used to identify the Composite SOP Instances resulting from this worklist item.
Multiple Copies Flag	(0040,4006)	O	1	This Attribute shall be used to determine if multiple copies of Composite SOP Instances have to be created.
All other Attributes from the General Purpose Scheduled Procedure Step Information Module		O	3	
General Purpose Scheduled Procedure Step Relationship				

Provided by IHS
No reproduction or networking permitted without license from IHS
Not for Resale

Referenced Request Sequence	(0040,A370)	O	1	
>Study Instance UID	(0020,000D)	O	1	This is the Study Instance UID that shall be used to identify an identical copy of an SR Object, in case multiple copies are created.
>Referenced Study Sequence	(0008,1110)	O	2	
>>Referenced SOP Class UID	(0008,1150)	O	1	
>>Referenced SOP Instance UID	(0008,1155)	O	1	
>Requested Procedure ID	(0040,1001)	O	1	
>Requested Procedure Description	(0032,1060)	O	1C	The Requested Procedure Description (0032,1060) or the Requested Procedure Code Sequence (0032,1064) or both shall be supported by the SCP.
>Requested Procedure Code Sequence	(0032,1064)	O	1C	The Requested Procedure Description (0032,1060) or the Requested Procedure Code Sequence (0032,1064) or both shall be supported by the SCP. The Requested Procedure Code Sequence shall contain only a single Item.
>>Code Value	(0008,0100)	O	1	
>>Coding Scheme Designator	(0008,0102)	O	1	
>>Code Meaning	(0008,0104)	-	1	Code Meaning shall not be used as Matching Key.
>Accession Number	(0008,0050)	R	2	Accession Number shall be retrieved with Single Value Matching.
>Requesting Physician	(0032,1032)	O	2	
>All other Attributes relating to the Requested Procedure and the Imaging Service Request in the General Purpose Scheduled Procedure Step Relationship Module		O	3	
Patient Relationship				
All Attributes from the Patient Relationship Module except those explicitly included in this Table (see Note)		O	3	
Patient Identification				
Patient's Name	(0010,0010)	R	1	Patient's Name shall be retrieved

Provided by IHS
No reproduction or networking permitted without license from IHS
Not for Resale

				with Single Value Matching or Wild Card Matching.
Patient ID	(0010,0020)	R	1	Patient ID shall be retrieved with Single Value Matching.
All other Attributes from the Patient Identification Module		O	3	
Patient Demographic				
Patient's Birth Date	(0010,0030)	O	2	
Patient's Sex	(0010,0040)	O	2	
All other Attributes from the Patient Demographic Module		O	3	
Patient Medical				
Pertinent Documents Sequence	(0038,0100)	O	3	Pertinent Documents Sequence shall be retrieved with Universal Matching only
>Referenced SOP Class UID	(0008,1150)	-	1	
>Referenced SOP Instance UID	(0008,1155)	-	1	
>Purpose of Reference Code Sequence	(0040,A170)	-	2	
>>Code Value	(0008,0100)	-	1	
>>Coding Scheme Designator	(0008,0102)	-	1	
>>Code Meaning	(0008,0104)	-	1	
>Document Title	(0042,0010)	-	2	
All other Attributes from the Patient Medical Module		O	3	

Notes: 1. The reason for this exclusion is to assure that the attributes that may be present in multiple modules are included only once with the meaning pertaining to only one module (for example, Referenced Study Sequence (0008,1110) shall be included once with the meaning as defined in the Requested Procedure Module).

2. The use of Specific Character Set is discussed in section K.4.1.1.3.1 and K.4.1.1.3.2.

The attributes in Table K.6-2a are not part of the Worklist Information Model; their inclusion in the C-FIND request and response identifier are governed by rules in sections K.4.1.1.3.1 and K.4.1.1.3.2, respectively.

Table K.6-2a
ATTRIBUTES FOR THE GENERAL PURPOSE WORKLIST C-FIND IDENTIFIER

Description	Tag	Request Identifier	Response Identifier	Remark Type
Specific Character Set	(0008,0005)	1C	1C	This attribute is required if expanded or replacement character sets are used. See

--`,,```,,,,````-`-`,,`,,`,`,,`---

Provided by IHS
No reproduction or networking permitted without license from IHS Not for Resale

				C.2.2.2 and K.4.1.1.3
HL7 Structured Document Reference Sequence	(0040,A390)	-	1C	One or more Items may be included in this sequence. Required if HL7 Structured Documents are referenced within the Identifier. See K.4.1.1.3
>Referenced SOP Class UID	(0008,1150)	-	1	
>Referenced SOP Instance UID	(0008,1155)	-	1	
>HL7 Instance Identifier	(0040,E001)	-	1	
>Retrieve URI	(0040,E010)	-	3	

K.6.2.2.3 Unique Identification of the General Purpose Worklist Item

The SOP Class UID and SOP Instance UID Attributes are defined for all DICOM IODs. For Normalized IODs they are not encoded in the IOD, but contained in the respective Attributes in the DIMSE Services. The General Purpose Scheduled Procedure Step SOP Instance is a persistent object, and the SOP Class UID and SOP Instance UID are included in the General Purpose Worklist. The value for this attribute originates from the SOP Instance UID assigned to the corresponding object at the time of creation by the SCP.

K.6.2.3 Conformance Requirements

An implementation may conform to the General Purpose Worklist SOP Class as an SCU and/or as an SCP.

An implementation which conforms to the General Purpose Worklist SOP Class shall also support the General Purpose Worklist Management Meta SOP Class.

The Conformance Statement shall be in the format defined in Annex A of PS 3.2.

K.6.2.3.1 SCU Conformance

An implementation which conforms to the General Purpose Worklist SOP Class shall support queries against the Worklist Information Model described in Section K.6.2.2 of this Annex using the baseline C-FIND SCU Behavior described in Section K.4.1.2 of this Annex.

An implementation which conforms to the General Purpose Worklist SOP Class as an SCU shall state in its Conformance Statement whether it requests matching on Optional Matching Key Attributes. If it requests Type 3 Return Key Attributes, then it shall list these Optional Return Key Attributes.

An implementation which conforms to the General Purpose Worklist SOP Class as an SCU shall state in its Conformance Statement how it makes use of Specific Character Set (0008,0005) when encoding queries and interpreting responses.

K.6.2.3.2 SCP Conformance

An implementation which conforms to the General Purpose Worklist SOP Class shall support queries against the Worklist Information Model described in Section K.6.2.2 of this Annex using the C-FIND SCP Behavior described in Section K.4.1.3 of this Annex.

An implementation which conforms to the General Purpose Worklist SOP Class as an SCP shall state in its Conformance Statement whether it supports matching on Optional Matching Key Attributes. If it supports Type 3 Return Key Attributes, then it shall list all Optional Return Key Attributes which it supports.

--`,,```,,,,````-`-`,,`,,`,`,,`---

Provided by IHS
No reproduction or networking permitted without license from IHS
Not for Resale

An implementation which conforms to the General Purpose Worklist SOP Class as an SCP shall state in its Conformance Statement how it makes use of Specific Character Set (0008,0005) when interpreting queries, performing matching and encoding responses.

K.6.2.4 SOP Classes

The General Purpose Worklist SOP Class in the General Purpose Worklist Service Class identifies the General Purpose Worklist Information Model, and the DIMSE-C operations supported. The Standard SOP Class is shown in Table K.6.2.4-1.

Table K.6.2.4-1
General Purpose Worklist SOP Class

SOP Class Name	SOP Class UID
General Purpose Worklist Information Model - FIND	1.2.840.10008.5.1.4.32.1

K.6.2.5 General Purpose Worklist Management Meta SOP Class

The General Purpose Worklist Management Meta SOP Class is defined by the set of supported SOP Classes listed in Table K.6.2.5-1.

Table K.6.2.5-1
General Purpose Worklist Management Meta SOP Class

SOP Class Name	Reference	Usage SCU/SCP
General Purpose Worklist SOP Class	K.6.2	M/M
General Purpose Scheduled Procedure Step SOP Class	F.10	M/M
General Purpose Performed Procedure Step SOP Class	F.11	M/M

The General Purpose Worklist Management Meta SOP Class is intended for those Application Entities which conform to all of the aforementioned SOP Classes.

All requirements specified for the General Purpose Worklist Information Model SOP Class, General Purpose Scheduled Procedure Step SOP Class, and General Purpose Performed Procedure Step SOP Class shall be met by Application Entities conforming to the General Purpose Worklist Management Meta SOP Class.

K.6.2.5.1 General Purpose Worklist Management Meta SOP Class UID

The General Purpose Worklist Management Meta SOP Class shall be uniquely identified by the General Purpose Worklist Management Meta SOP Class UID which shall have the value "1.2.840.10008.5.1.4.32".

K.7 EXAMPLES FOR THE USAGE OF THE MODALITY WORKLIST (Informative)

Moved to PS 3.17

K.8 GENERAL PURPOSE WORKLIST EXAMPLE (INFORMATIVE)

Moved to PS 3.17.

Provided by IHS
No reproduction or networking permitted without license from IHS
Not for Resale

Annex L QUEUE MANAGEMENT SERVICE CLASS (Normative)

Retired. See PS 3.4 2004.

Provided by IHS
No reproduction or networking permitted without license from IHS
Not for Resale

Annex M : HANDLING OF IDENTIFYING PARAMETERS (Informative)

Retired. See PS 3.17.

Provided by IHS
No reproduction or networking permitted without license from IHS
Not for Resale

Annex N SOFTCOPY PRESENTATION STATE STORAGE SOP CLASSES (Normative)

N.1. OVERVIEW

N.1.1 Scope

The Softcopy Presentation State Storage SOP Classes extend the functionality of the Storage Service class (defined in Annex B) to add the ability to convey an intended presentation state or record an existing presentation state. The SOP Classes specify the information and behavior that may be used to present (display) images that are referenced from within the SOP Classes.

They include capabilities for specifying:

a. the output grayscale space in P-Values
b. the color output space as PCS-Values
c. grayscale contrast transformations including modality, VOI and presentation LUT
d. mask subtraction for multi-frame grayscale images
e. selection of the area of the image to display and whether to rotate or flip it
f. image and display relative annotations, including graphics, text and overlays
g. the blending of two image sets into a single presentation

The grayscale softcopy presentation state refers to the grayscale image transformations that are to be applied in an explicitly defined manner to convert the stored image pixel data values in a Composite Image Instance to presentation values (P-Values) when an image is displayed on a softcopy device. The P-Values are in a device independent perceptually linear space that is formally defined in PS 3.14 Grayscale Standard Display Function.

The color and pseudo-color softcopy presentation states refer to the color image transformations that are to be applied in an explicitly defined manner to convert the stored image pixel data values in a Composite Image Instance to Profile Connection Space values (PCS-Values) when an image is displayed on a softcopy device. The PCS-Values are in a device independent space that is formally defined in the ICC Profiles as CIEXYZ or CIELab values.

The blending presentation states specify two sets of images, an underlying set, and a superimposed set, and the manner in which their pixel values are blended. The underlying set is rendered as grayscale and the superimposed set is rendered as color. The blending is not defined in a pair wise image-by-image or frame-by-frame manner, but rather the manner in which the two sets are combined is left to the discretion of the implementation. Specifically, matters of spatial registration, and any re-sampling and the mechanism of interpolation are not specified.

The Softcopy Presentation State Storage SOP Classes may be used to store a single state per image, or a common state to be shared by multiple selected images. All images to which the Grayscale, Color and Pseudo-Color Presentation States apply must be a part of the same study that the stored state is a part of, and be of a single Composite Image Storage SOP Class.

The two sets of images to which the Blended Presentation State applies may be in separate Studies, Each set shall be within a single study. Each set shall be of a single Composite Image Storage SOP Class.

How an SCU of this SOP Class records or generates this state is beyond the scope of the standard.

--`,,```,,,,````-`-`,,`,,`,`,,`---

Provided by IHS
No reproduction or networking permitted without license from IHS Not for Resale

Note: For example, an acquisition device may acquire, reconstruct and store to a workstation or archive images that are later examined by an operator for the purpose of quality assurance or printing. At that time a selected grayscale transformation (such as a window level/width operation) may be applied by the operator, and that activity captured and saved as a Grayscale Softcopy Presentation State Storage SOP Instance to the same workstation or archive, from which it is subsequently available for use by another user. Another workstation may retrieve the state for later use. Alternatively, an automated algorithm may derive a state from analysis of image statistics, body part examined, or other characteristics.

How an SCP of this SOP Class chooses between multiple states that may apply to an image is beyond the scope of this standard, other than to state that a claim of conformance as an SCP of this SOP Class implies that the SCP shall make the presentation state available to the user of the device, and if selected by the user, shall apply all the transformations stored in the state in the manner in which they are defined in the standard.

Notes: 1. For example, an acquisition device may automatically store appropriate presentation states for series of images as they are reconstructed that represent adequate defaults. A user or algorithm may subsequently determine a more appropriate presentation state that more effectively displays the contents of an image, or record some annotation related directly to the image, and record that as another presentation state for an image. An application subsequently may display the image by automatically choosing to use the more recently saved or more specific presentation state, or may use the more general default presentation state for all images but notify the user that alternative presentation states are available.

2. Choice of the same presentation state to display a grayscale image on two devices claiming conformance to these SOP Classes implies through the definition of the P-Value space that the displayed image on both devices will be perceptually similar within the limits defined in PS 3.14 Grayscale Standard Display Function, regardless of the actual capabilities of the display systems.

3. Choice of the same presentation state to display a color image on two devices claiming conformance to these SOP Classes implies through the definition of the PCS-Value space that the displayed image on both devices will appear similar in color regardless of the actual capabilities of the display systems.

4. DICOM color images without an embedded optional ICC profile have no defined color space, regardless of their representation. The implementation creating a Color Softcopy Presentation State with an ICC profile is explicitly defining a color space in which to interpret that image, even if one was not known at the time that the image was created. Often a well-known color space such as sRGB will be used in the presentation state under such circumstances.

N.2 PIXEL TRANSFORMATION SEQUENCE

The Softcopy Presentation State Storage SOP Classes support a sequence of transformations that completely define the conversion of a stored image into a displayed image.

The sequence of transformations from stored pixel values into P-Values or PCS-Values is explicitly defined in a conceptual model. The actual sequence implemented may differ but must result in the same appearance. Figure N.2-1 describes this sequence of transformations.

Notes: 1. Even though a Composite Image Storage SOP Class may not include some modules that are part of the described transformations, the Softcopy Presentation State Storage SOP Classes do include them. For example, the CT Image Storage SOP Class includes Rescale Slope and Intercept in the CT Image Module, but does not include the Modality LUT Module, and hence is restricted to the description of linear transformations. A saved presentation state that refers to a CT Image Storage SOP Instance may include a Modality LUT, and hence may apply a non-linear transformation.

2. For the shutter, annotation and spatial transformations, the order in which they are applied relative to the other transformations should not result in a different appearance. The one exception is when a spatial transformation is applied that involves magnification implemented with interpolation. In this case, whether the interpolation is performed before or after the contrast transformations (such as VOI LUT) may result in a slightly different appearance. It is

--`,,```,,,,````-`-`,,`,,`,`,,`---

Provided by IHS
No reproduction or networking permitted without license from IHS Not for Resale

not considered necessary to constrain this sequence more precisely.

The transformations defined in the Softcopy Presentation State Storage SOP Classes replace those that may be defined in the Referenced Image SOP Instance. If a particular transformation is absent in the Softcopy Presentation State Storage SOP Class, then it shall be assumed to be an identity transformation, and any equivalent transformation, if present, in the Referenced Image SOP Instance shall NOT be used instead.

Values of MONOCHROME1 and MONOCHROME2 for Photometric Interpretation (0028,0004) in the Referenced Image SOP Instance shall be ignored, since their effect is defined by the application of the grayscale presentation state transformations.

Note: These requirements are in order to achieve complete definition of the entire transformation in the Softcopy Presentation State Storage SOP Classes, and not to depend on the content of the Referenced Image SOP Instance, which may change.

The Referenced Image Storage SOP Instance may also contain bit-mapped overlays. The Softcopy Presentation State Storage SOP Classes specify a mechanism for turning these on or off (i.e. displaying them or not).

The presentation related Attributes of the Softcopy Presentation State Storage SOP Classes are immutable. They shall never be modified or updated; only a derived SOP Instance with a new SOP Instance UID may be created to represent a different presentation.

When a Supplemental Palette Color LUT is present in a grayscale Referenced Image Storage SOP Instance:

- The grayscale pipeline in any applicable Grayscale Softcopy Presentation State Storage SOP Instance or Blended Softcopy Presentation State Storage SOP Instance shall be applied only to the range of grayscale stored pixel values, and the presentation state shall not affect the rendering of the indexed color values.
- A Color Softcopy Presentation State Storage SOP Instance shall not be applied.
- A Pseudo-color Softcopy Presentation State Storage SOP Instance may be applied, in which case the Supplemental Palette Color LUT information shall be ignored.
- No mechanism for separately specifying color consistency of the colors in the Supplemental Palette Color LUT is presently defined, only the optional inclusion of an ICC profile in the image instance.

Provided by IHS
No reproduction or networking permitted without license from IHS
Not for Resale

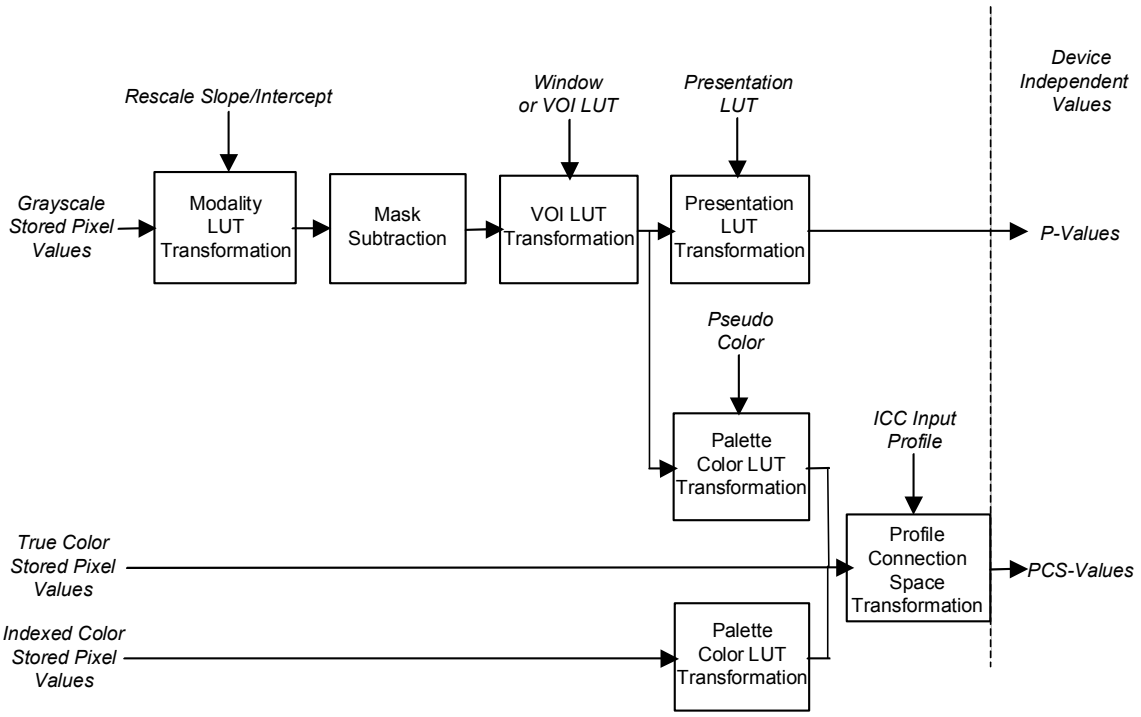

Figure N.2-1
Grayscale and Color Image Transformation Models

N.2.1 Grayscale Transformations

N.2.1.1 Modality LUT

The Modality LUT operation applies only to grayscale values.

The Modality LUT transformation transforms the manufacturer dependent pixel values into pixel values which are meaningful for the modality and which are manufacturer independent (e.g., Hounsfield number for CT modalities, Optical Density for film digitizers). These may represent physical units or be dimensionless. The Modality LUT in the Presentation State is modality dependent and is analogous to the same module in an Image.

Notes: 1. In some cases, such as the CT Image Storage SOP Class, the same conceptual step as the Modality LUT is specified in another form, for example as Rescale Slope and Rescale Intercept Attributes in the CT Image Module, though the Modality LUT Module is not part of the CT Image IOD.

2. Image pixel values with a value of Pixel Padding Value (0028,0120) (if present in the image) shall be accounted for prior to entry to the Modality LUT stage. See the definition of Pixel Padding Value in PS 3.3.

In the case of a linear transformation, the Modality LUT is described by the Rescale Slope (0028,1053) and Rescale Intercept (0028,1052). In the case of a non-linear transformation, the Modality LUT is described by the Modality LUT Sequence. The rules for application of the Modality LUT are defined in PS 3.3 Modality LUT Module.

If the Modality LUT or equivalent Attributes are part of both the Image and the Presentation State, then the Presentation State Modality LUT shall be used instead of the Image Modality LUT or equivalent Attributes in the Image. If the Modality LUT is not present in the Presentation State it

Provided by IHS
No reproduction or networking permitted without license from IHS
Not for Resale

shall be assumed to be an identity transformation. Any Modality LUT or equivalent Attributes in the Image shall not be used.

N.2.1.2 Mask

The Mask operation applies only to grayscale values.

The mask transformation may be applied in the case of multi-frame images for which other frames at a fixed frame position or time interval relative to the current frame may be subtracted from the current frame. Multiple mask frames may be averaged, and sub-pixel shifted before subtraction.

This transformation uses the Mask Module as used in the X-Ray Angiography Image Storage SOP Class, though it may be applied to any Image Storage SOP Instance that contains a multi-frame image.

In the case of X-Ray images, the subtraction is specified to take place in a space logarithmic to X-Ray intensity. If the stored pixel values are not already in such a space, an implementation defined transformation to such a space must be performed prior to subtraction. If a Modality LUT Module is present as well as a Mask Module, then the Modality LUT shall specify a transformation into such a logarithmic space, otherwise it shall not be present (even though a Modality LUT may be present in the referenced image(s) which shall be ignored).

Notes: 1. In the case of an XA or XRF image, if the Pixel Intensity Relationship (0028,1040) in the image is LOG, then even though a Modality LUT would be present in the image (to map pixel values back to linear to X-Ray intensity), no Modality LUT would be present in the presentation state (i.e. the Modality LUT would be an identity transformation) since log values are required for subtraction. See PS 3.3 C.8.7.1.1.2.

2. In the case of an XA or XRF image, if the Pixel Intensity Relationship (0028,1040) is LIN, then no Modality LUT would be present in the image, but a Modality LUT would need to be present in the presentation state since log values are required for subtraction.

3. In the case of an XA or XRF image, if the Pixel Intensity Relationship (0028,1040) in the image is DISP, then even though a Modality LUT may or may not be present in the image (to map pixel values back to linear to X-Ray intensity), a different Modality LUT would be present in the presentation state if the creator of the presentation state could create a transformation from DISP pixel values to a logarithmic space for subtraction, or the Modality LUT in the presentation state would be an identity transformation if the DISP pixel values were known to already be log values required for subtraction.

The result will be a signed value with a bit length one longer than the source frames.

When there is no difference between corresponding pixel values, the subtracted image pixel will have a value of 0.

If a pixel in the current frame has a greater value than in the mask frame, then the resulting frame shall have a positive value. If it has a lesser value, then the resulting frame shall have a negative value.

N.2.1.3 VOI LUT

The VOI LUT operation applies only to grayscale values.

The value of interest (VOI) LUT transformation transforms the modality pixel values into pixel values that are meaningful for the user or the application.

Note: Photometric Interpretation (0028,0004) is ignored, since its effect is defined by the application of the grayscale transformations.

The Softcopy VOI LUT Module in the Presentation State is analogous to the VOI LUT Module in an Image.

Provided by IHS
No reproduction or networking permitted without license from IHS Not for Resale

In the case of a linear transformation, the VOI LUT is described by the Window Center (0028,1050) and Window Width (0028,1051). In the case of a non-linear transformation, the VOI LUT is described by the VOI LUT Sequence. A VOI LUT Function (0028,1056) may be present to define a potentially non-linear interpretation (e.g., SIGMOID) of the values of Window Center (0028,1050) and Window Width (0028,1051). The rules for application of the VOI LUT are defined in PS 3.3 Softcopy VOI LUT Module.

The VOI LUT may have sections with negative slope.

Note: In the Basic Print Service Class a VOI LUT may not have negative slope.

If a VOI LUT is part of both the Image and the Presentation State then the Presentation State VOI LUT shall be used instead of the Image VOI LUT. If a VOI LUT (that applies to the Image) is not present in the Presentation State , it shall be assumed to be an identity transformation. Any VOI LUT or equivalent values in the Image shall not be used.

N.2.1.4 Presentation LUT

The Presentation LUT operation applies only to grayscale values.

The Presentation LUT transformation transforms the pixel values into P-Values, a device independent perceptually linear space as defined in PS 3.14 Grayscale Display Function Standard. It may be an identity function if the output of the VOI LUT transformation is in P-Values.

Note: If the Presentation LUT and VOI LUT step are identity transformations, and the Mask Module is absent, then the output of the Modality LUT must be, by definition, P-Values.

No output space other than P-Values is defined for the Grayscale Softcopy Presentation State Storage SOP Classes.

In the case of a linear transformation, the Presentation LUT is described by the Presentation LUT Shape (2050,0020). In the case of a non-linear transformation, the Presentation LUT is described by the Presentation LUT Sequence. The rules for application of the Presentation LUT are defined in PS 3.3 Softcopy Presentation LUT Module.

Notes: 1. Since the grayscale transformation pipeline fully defines all transformations applied to the stored pixel values in the referenced image object, the value of Photometric Interpretation (0028,0004) in the referenced image object is ignored and overridden. This implies that either the creator of the presentation state chose a pipeline that reflects the Photometric Interpretation (0028,0004) , or chose to ignore or override the Photometric Interpretation, and invert the image relative to what is specified by Photometric Interpretation. If the Modality LUT and VOI LUT do not have a negative slope, one can achieve the effect of inversion of the polarity of an image by choosing Presentation LUT Shape of IDENTITY or INVERSE that displays the minimum pixel value as white rather than black in the case of a Photometric Interpretation of MONOCHROME2, or black rather than white in the case of a Photometric Interpretation of MONOCHROME1. If Presentation LUT Data is sent, then one can invert the value of the entries in the LUT table to achieve inversion of polarity.

2. The minimum P-Value (zero) always commands that the lowest intensity be displayed.

3. No separate Polarity transformation is defined.

A Softcopy Presentation LUT Module is always present in a Presentation State. If a Presentation LUT is present in the Image then the Presentation State Presentation LUT shall be used instead of the Image Presentation LUT.

N.2.2 Color Transformations

N.2.2.1 Profile Connection Space Transformation

The Profile Connection Space Transformation operation applies only to color images, including true color (e.g., RGB) and pseudo-color (e.g., PALETTE COLOR) images, grayscale images for

Provided by IHS
No reproduction or networking permitted without license from IHS Not for Resale

which a Palette Color LUT has been specified in the Presentation State, and the RGB output values of a blending operation.

The ICC Profile is an Input Profile. That is, it describes the color characteristics of a (possibly hypothetical) device that was used to generate the input color values.

The intent is that a rendering device will use this information to achieve color consistency. Typically this will be performed by calibration of the output device to create an ICC Display or Output Profile, the conversion of pixel values using the ICC Input Profile into Profile Connection Space, followed by conversion using the ICC Display or Output Profile into values suitable for rendering on the output device. However, the exact mechanisms used are beyond the scope of the standard to define.

Notes: 1. The means of achieving color consistency depends to a large extent on the nature of the material and the intent of the application. The process is more complicated than simply achieving colorimetric accuracy, which is trivial but does not produce satisfactory results. The transformations may take into account such matters as

- physical factors such as the ambient light of the viewing environment (viewing flare) and the nature of different illuminants
- psychovisual factors in the observer
- the preferences of the observer
- the consistency intent, whether it be to reproduce the colors perceived by an observer of
    - the original scene,
    - the media being reproduced, such as a print or transparency, as viewed under specified conditions.

2. Implementations of color management schemes are typically provided in operating systems, libraries and toolkits, and the exact details are usually beyond the control of the DICOM application developer. Accordingly, it is normally sufficient to define a source of pixel values, and a corresponding ICC Input Profile for the device that captured or generated them.

3. When a color image is rendered on grayscale display, the behavior is not defined. Since the L* value of a CIELab representation of the PCS is not dissimilar to the Barten model used in the GSDF, a reasonable approach would be to interpret it as a P-Value.

An ICC Profile is always present in a Color, Pseudo-Color or Blended Presentation State. If an ICC Profile is present in the Image then the Presentation State ICC Profile shall be used instead of the Image ICC Profile.

N.2.2.2 White Point (Informative)

D50 means black body radiation of an object at 5000 degrees K, and includes lots of red, which looks “natural”. D65 is bluer, more like “cloudy days”, but human eyes are more sensitive to blue. While monitors seem to be in the D50-D100 range, light boxes are about D110 (11000K).

The ICC PCS always uses a white point of D50.

In an ICC Input Profile, the chromaticAdaptationTag encodes a conversion of an XYZ color from the actual illumination source to the PCS illuminant (D50), and may be useful if the actual illumination source is not D50. The actual illumination source may also be defined in the mediaWhitePointTag. However, with a perceptual rendering intent, neither of these tags are required to be used by the color management system, nor do they have any specified rendering behavior (as opposed to their use with absolute and relative colorimetric rendering intents).

It is beyond the scope of DICOM to define a required or suggested white point for rendering, since an appropriate choice depends on a knowledge of the display device or media characteristics and the viewing environment.

--`,,```,,,,````-`-`,,`,,`,`,,`---

Provided by IHS
No reproduction or networking permitted without license from IHS Not for Resale

N.2.3 Common Spatial and Annotation Transformations

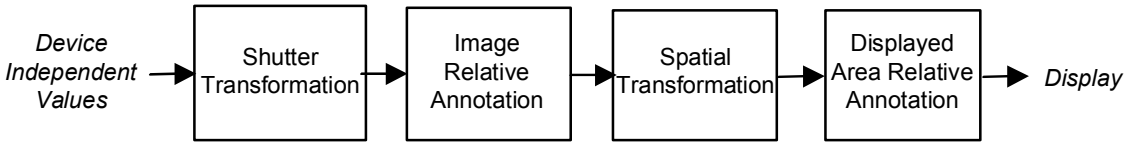

Figure N.2-2
Common Spatial and Annotation Transformation Model

The common spatial and annotation transformations apply to any device-independent values, whether they be grayscale P-Values or color PCS-Values, for any type of presentation state.

The values with which to render annotations are encoded as device-independent values, either as grayscale P-Values or as color PCS-Values. In the case of PCS-Values, CIELab values are encoded, and defined by reference to a D50 illuminant.

Grayscale presentation states may specify annotations in color for rendering on a color output device.

The mechanism for mapping grayscale P-Values and color PCS-values to the same display is implementation-dependent and not defined by the standard.

N.2.3.1 Shutter

The Shutter transformation provides the ability to exclude the perimeter outside a region of an image. A gray level may be specified to replace the area under the shutter.

One form of this transformation uses the Display Shutter Module as used in the X-Ray Angiography Image Storage SOP Class, though it may be applied to any Image Storage SOP Instance, including single frame images.

Another form uses a bit-mapped overlay to indicate arbitrary areas of the image that should be excluded from display by replacement with a specified gray level, as described in the Bitmap Display Shutter Module.

Notes: 1. Since annotations follow the shutter operation in the pipeline, annotations in shuttered regions are not obscured and are visible.

2. Any shutter present in the referenced image object is ignored (i.e. not applied).

N.2.3.2 Pre-Spatial Transformation Annotation

The Pre-Spatial Transformation Annotation transformation includes the application of bit-mapped overlays as defined in the Overlay Plane Module, and free unformatted text or vector graphics as described in the Graphic Annotation Module that are defined in the image pixel space (as opposed to the displayed area space).

N.2.3.3 Spatial Transformation

Some modalities may not deliver the image in the desired rotation and need to specify a rotation into the desired position for presentation. This transformation, specified in the Spatial Transformation Module, includes a rotation of 90, 180, 270 degrees clockwise followed by a horizontal flip (L <--> R). Rotation by an arbitrary angle is not supported.

Provided by IHS
No reproduction or networking permitted without license from IHS
Not for Resale

In addition, selection of a region of the image pixel space to be displayed is specified in the Displayed Area Module. This may have the effect of magnifying (or minifying) that region depending on what physical size the display is instructed to render the selected region. If so, the method of interpolation (or sub-sampling) is implementation dependent.

Note: In particular the number of displayed pixels may be different from the number of image pixels as a result of:

- minification (e.g. 1 display pixel for 4 image pixels),
- magnification (4 display pixels for each image pixel) ,
- interpolation (display pixels derived from values other than those in the image pixels), and
- sub-sampling.

N.2.3.4 Post-Spatial Transformation Annotation

The Post-Spatial Transformation Annotation transformation includes the application of free unformatted text or vector graphics as described in the Graphic Annotation Module that are defined in the displayed area space (as opposed to the image pixel space).

This implies that the displayed area space is defined as being the image after all Spatial Transformations have been applied.

These annotations are rendered in the displayed space, though they may be anchored to points in either the displayed area or image pixel space.

N.2.4 Blending Transformations

The grayscale to color blending transformation model applies only to a pair of grayscale values, one of which is first mapped to color and then superimposed upon the other. The resulting values are device independent color PCS-Values. This process is illustrated in Figure N.2-3.

For the purpose of this section, pixels are referred to as stored pixel values and transformations are defined as point operations on these values. However, it is likely that pixels from either or both the superimposed and underlying image sets will have been spatially resampled and hence interpolated or replicated. Such operations do not affect the conceptual pipeline.

Provided by IHS
No reproduction or networking permitted without license from IHS
Not for Resale

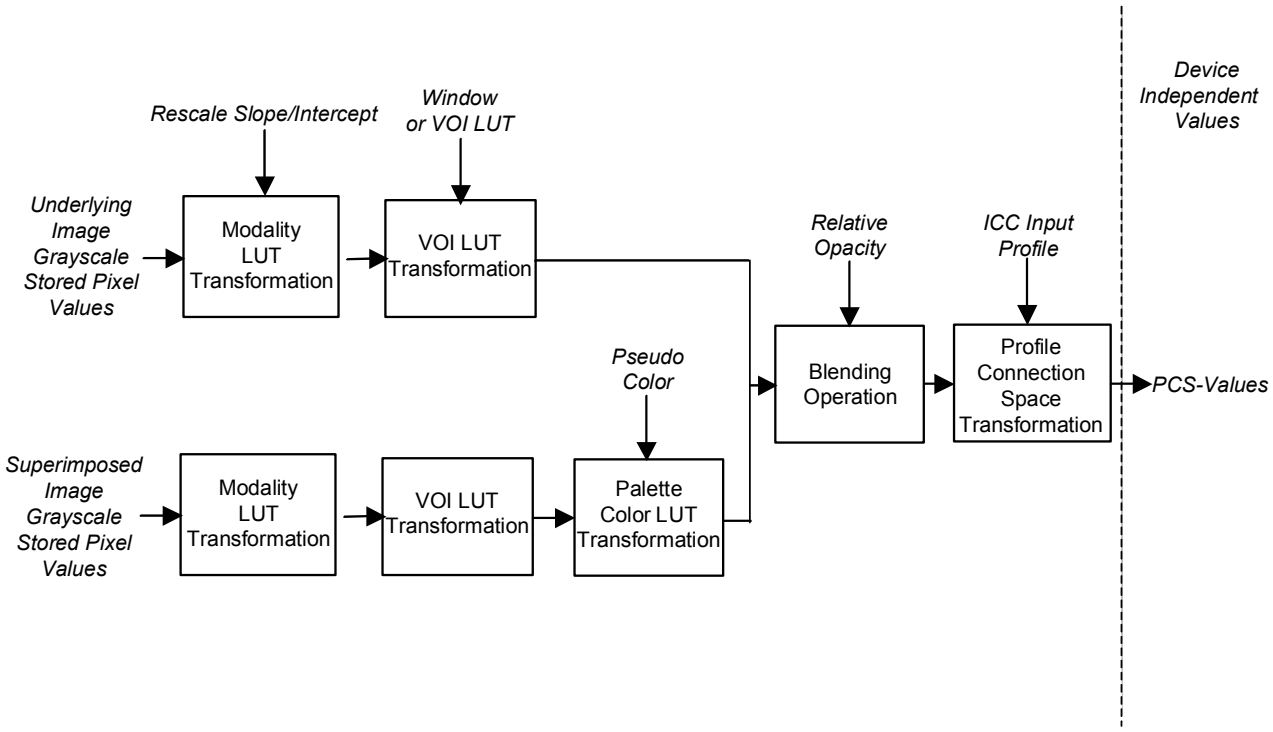

Figure N.2-3
Grayscale to Color Blending Transformation Model

N.2.4.1 Underlying Image Pixels

The Modality LUT and VOI LUT transformations are applied to the stored pixel values of the underlying image.

The output range of the VOI LUT transformation depends either on the width of the linear window or the range of output values of the LUT defined by the LUT Descriptor. Conceptually, for the purpose of describing the succeeding blending operation, the smallest pixel value from the range is mapped to 0.0 and the largest pixel value is mapped to 1.0 and all intermediate values are linearly mapped to the [0.0..1.0] interval.

N.2.4.2 Superimposed Image Pixels

The Modality LUT and VOI LUT transformations are applied to the stored pixel values of the superimposed image.

The full output range of the preceding VOI LUT transformation is implicitly scaled to the entire input range of the Palette Color LUT Transformation.

The output range of the RGB values in the Palette Color LUT Transformation depends on the range of output values of the LUT defined by the LUT Descriptors. Conceptually, for the purpose of describing the succeeding blending operation, a LUT entry of 0 is mapped to 0.0 and the largest LUT entry possible is mapped to 1.0 and all intermediate values are linearly mapped to the [0.0..1.0] interval.

Note: In practice, the Palette Color LUT output for the superimposed images is encoded in 8 or 16 bits and hence will have a range of 0 to 0xFF or 0xFFFF.

Provided by IHS
No reproduction or networking permitted without license from IHS
Not for Resale

The Palette Color LUT used is that encoded in the Blending Presentation State; any Palette Color LUTs or Supplemental Palette Color LUTs in the image instances are ignored.

N.2.4.3 Blending Operation

The inputs to the blending operation are grayscale values from 0.0 to 1.0 from the underlying image (Y_u) and RGB values from 0.0 to 1.0 from the superimposed image (RGB_s), and an opacity value from 0.0 to 1.0 (A).

The output is a single image containing RGB values (RGB_o) blended as:

$$R_o = R_s * A + Y_u * (1-A)$$

$$G_o = G_s * A + Y_u * (1-A)$$

$$B_o = B_s * A + Y_u * (1-A)$$

N.2.4.4 Conversion to Profile Connection Space

The output of the blending operation is implicitly scaled to the gamut of the hypothetical device described by the ICC Input Profile, resulting in PCS-Values.

N.3 BEHAVIOR OF AN SCP

In addition to the behavior for the Storage Service Class specified in B.2.2 Behavior of an SCP, the following additional requirements are specified for the Softcopy Presentation State Storage SOP Classes:

— a display device acting as an SCP of these SOP Classes shall make all mandatory presentation attributes available for application to the referenced images at the discretion of the display device user, for all Image Storage SOP Classes defined in the Conformance Statement for which the Softcopy Presentation State Storage SOP Class is supported.

Note: Though it is not required, a display device acting as an SCP of the Blending Softcopy Presentation State Storage SOP Class may support the Spatial Registration Storage SOP Class in order to transform one Frame of Reference into another or to explicitly identify the relationship between members of two sets of images, and may be able to resample underlying and superimposed sets of images that differ from each other in orientation and in-plane and between-plane spatial resolution.

N.4 CONFORMANCE

In addition to the Conformance Statement requirements for the Storage Service Class specified in B.4.3, the following additional requirements are specified for the Softcopy Presentation State Storage SOP Classes:

N.4.1 Conformance Statement for An SCU

The following issues shall be documented in the Conformance Statement of any implementation claiming conformance to a Softcopy Presentation State Storage SOP Class as an SCU:

— For an SCU of a Softcopy Presentation State Storage SOP Class that is creating a SOP Instance of the Class, the manner in which presentation related attributes are derived from a displayed image, operator intervention or defaults, and how they are included in the IOD.

— For an SCU of a Softcopy Presentation State Storage SOP Class, the Image Storage SOP Classes that are also supported by the SCU and which may be referenced by

--`,,```,,,,````-`-`,,`,,`,`,,`---

Provided by IHS
No reproduction or networking permitted without license from IHS Not for Resale

instances of the Softcopy Presentation State Storage SOP Class.

N.4.2 Conformance Statement for An SCP

The following issues shall be documented in the Conformance Statement of any implementation claiming conformance to a Softcopy Presentation State Storage SOP Class as an SCP:

— For an SCP of a Softcopy Presentation State Storage SOP Class that is displaying an image referred to by a SOP Instance of the Class, the manner in which presentation related attributes are used to influence the display of an image.

— For an SCP of a Softcopy Presentation State Storage SOP Class, the Image Storage SOP Classes that are also supported by the SCP and which may be referenced by instances of the Softcopy Presentation State Storage SOP Class.

--`,,```,,,,````-`-`,,`,,`,`,,`---

Provided by IHS
No reproduction or networking permitted without license from IHS Not for Resale

Annex O STRUCTURED REPORTING STORAGE SOP CLASSES (Normative)

O.1 OVERVIEW

The Structured Reporting Storage SOP Classes extend the functionality of the Storage Service class (defined in Annex B) to extend the SCP behavior and conformance requirements.

O.2 BEHAVIOR

O.2.1 Behavior of an SCU

O.2.1.1 Mammography and Chest CAD SR SOP Classes

Rendering Intent concept modifiers in the Mammography CAD SR and Chest CAD SR objects shall be consistent. Content items marked “For Presentation” shall not be subordinate to content items marked “Not for Presentation” or “Presentation Optional” in the content tree. Similarly, content items marked “Presentation Optional” shall not be subordinate to content items marked “Not for Presentation” in the content tree.

Content items referenced from another SR object instance, such as a prior Mammography CAD SR or Chest CAD SR, shall be inserted by-value in the new SR object instance, with appropriate original source observation context. It is necessary to update Rendering Intent, and referenced content item identifiers for by-reference relationships, within content items paraphrased from another source.

O.2.2 Behavior of an SCP

An SCP intending to display or otherwise render a Structured Report shall convey its full meaning in an unambiguous manner.

An Icon Image in an IMAGE reference has no meaning, and is not required to be rendered.

For a device, that is both an SCU and an SCP of these Storage SOP Classes, in addition to the behavior for the Storage Service Class specified in B.2.2, the following additional requirements are specified for Structured Reporting Storage SOP Classes:

— an SCP of this SOP Class shall support Level 2 Conformance as defined in Section B.4.1.

Note: This requirement means that all Type 1, Type 2, and Type 3 Attributes defined in the Information Object Definition associated with the SOP Class will be stored and may be accessed.

O.2.2.1 Mammography CAD SR and Chest CAD SR SOP Classes

The Mammography CAD SR and Chest CAD SR objects contain data not only for presentation to the clinician, but also data solely for use in subsequent mammography CAD analyses.

The SCU provides rendering guidelines via “Rendering Intent” concept modifiers associated with “Individual Impression/Recommendation”, “Composite Feature” and “Single Image Finding” content items. The full meaning of the SR is provided if all content items marked “Presentation Required” are rendered down to the first instance of “Not for Presentation” or “Presentation Optional” for each branch of the tree. Use of the SCU’s Conformance Statement is recommended if further enhancement of the meaning of the SR can be accomplished by rendering some or all of the data marked “Presentation Optional”. Data marked “Not for

Provided by IHS
No reproduction or networking permitted without license from IHS Not for Resale

Presentation" should not be rendered by the SCP; it is embedded in the SR content tree as input to subsequent Mammography CAD analysis work steps.

The SCP may further interpret whether or not to render a Single Image Finding that has Rendering Intent "Presentation Optional" by interpreting the value of the CAD Operating Point content item that is subordinate to the Rendering Intent, if present. If the CAD Operating Point content item is not present, then rendering of the Single Image Finding may be based on recommendations in the creator's DICOM Conformance Statement. For further information on the intended use of CAD Operating Point see PS 3.17, Mammography CAD (Informative) Annex, CAD Operating Point.

O.3 MODIFICATION OF SR DOCUMENT CONTENT

A device that is an SR Storage SOP Class SCU may modify information in a SOP Instance which it has previously sent or received. When this SOP Instance is modified and sent to an SCP, it shall be assigned a new SOP Instance UID if any of the following conditions are met:

- addition, removal or update of any attribute within the SR Document General Module or SR Document Content Module;
- modification of the Series Instance UID (0020,000E);
- modification of the Study Instance UID (0020,000D).

O.4 CONFORMANCE

In addition to the Conformance Statement requirements for the Storage Service Class specified in B.4.3, the following additional requirements are specified for Structured Reporting Storage SOP Classes:

O.4.1 Conformance Statement for an SCU

The following shall be documented in the Conformance Statement of any implementation claiming conformance to the Structured Reporting Storage SOP Classes as an SCU:

— The Image or other composite object Storage SOP Classes that are also supported by the SCU and which may be referenced by instances of Structured Reporting Storage SOP Class.

— The range of Value Types and Relationship Types that are supported by the SCU.

— The conditions under which a new SOP Instance UID is generated for an existing SR Document.

— If the implementation provides Query/Retrieve of Structured Reporting SOP Instances as an SCU, whether it supports the Optional Keys Concept Name Code Sequence or Content Template Sequence.

O.4.1.1 Mammography CAD SR and Chest CAD SR SOP Classes

The following shall be documented in the Conformance Statement of any implementation claiming conformance to the Mammography CAD SR SOP Class as an SCU:

- Which types of detections and/or analyses the device is capable of performing:
    - From detections listed in Context Group 6014 Mammography Single Image Finding
    - From analyses listed in Context Group 6043 Types of Mammography CAD Analysis

Provided by IHS
No reproduction or networking permitted without license from IHS Not for Resale

The following shall be documented in the Conformance Statement of any implementation claiming conformance to the Chest CAD SR SOP Class as an SCU:

- Which types of detections and/or analyses the device is capable of performing:
    - From detections listed in Context ID 6101 Chest Finding or Feature, or Context ID 6102 Chest Finding or Feature Modifier
    - From analyses listed in Context ID 6137 Types of Chest CAD Analysis

The following shall be documented in the Conformance Statement of any implementation claiming conformance to the Mammography CAD SR or Chest CAD SR SOP Class as an SCU that creates instances:

- Which optional content items are supported
- Conditions under which content items are assigned Rendering Intent of “Presentation Optional”, and whether a CAD Operating Point value will be included with each Single Image Finding that has Rendering Intent of “Presentation Optional”
- • Recommendations for the conditions under which content items with Rendering Intent of “Presentation Optional” should be rendered, based on CAD Operating Point or otherwise
- Conditions under which content items are assigned Rendering Intent of “Not for Presentation”

O.4.2 Conformance Statement for an SCP

The following shall be documented in the Conformance Statement of any implementation claiming conformance to the Structured Reporting Storage SOP Class as an SCP:

— For an SCP of a Structured Reporting Storage SOP Class that is displaying or otherwise rendering the structured report contained in a SOP Instance of the Class, the general form in which the structured report related attributes are rendered.
— For an SCP of a Structured Reporting Storage SOP Class, the Image or other composite object Storage SOP Classes that are also supported by the SCP and which may be referenced by instances of the Structured Reporting Storage SOP Class, and whether or not they will be displayed or otherwise rendered.
— For an SCP of a Structured Reporting Storage SOP Class that is displaying or otherwise rendering an image or other composite object referred to by a SOP Instance of the Class, the manner in which the structured report related attributes (such as spatial coordinates and referenced presentation states) are used to influence the display of the image or object.
— If the implementation supports Query/Retrieve of Structured Reporting SOP Instances as an SCP, whether it supports the Optional Keys Concept Name Code Sequence or Content Template Sequence.

O.4.2.1 Mammography CAD SR and Chest CAD SR SOP Classes

The following shall be documented in the Conformance Statement of any implementation claiming conformance to the Mammography CAD SR or Chest CAD SR SOP Class as an SCP:

- Conditions under which the SCP will render content items with Rendering Intent concept modifier set to “Presentation Optional”

--`,,```,,,,````-`-`,,`,,`,`,,`---

Provided by IHS
No reproduction or networking permitted without license from IHS
Not for Resale

Annex P APPLICATION EVENT LOGGING SERVICE CLASS (Normative)

P.1 OVERVIEW

P.1.1 Scope

The Application Event Logging Service Class defines an application-level class-of-service that facilitates the network transfer of Event Log Records to be logged or recorded in a central location.

The Application Event Logging Service Class addresses the class of application specific logs (e.g., procedural event logs) that are managed by a medical application. The Application Event Logging Service Class does not specify the means of accessing the central logs.

Note: This Service Class does not address system security or audit logs that are managed by general system logging applications, and which may use non-DICOM protocols (e.g., SYSLOG).

P.1.2 Service Definition

Two peer DICOM AEs implement a SOP Class of the Application Event Logging Service Class with one serving in the SCU role and one serving in the SCP role. SOP Classes of the Application Event Logging Service Class are implemented using the DIMSE-N N-ACTION service as defined in PS 3.7.

The N-ACTION service conveys the following semantics:

— The SCU notifies the SCP that an event has occurred that the SCP should record in a log. The Action Information of the N-ACTION-RQ contains the information about the event.
— The SCP responds with a confirmation of the status of the recording action.

The association negotiation procedure is used to negotiate the supported SOP Classes. PS 3.7 specifies the association procedure. The Application Event Logging Service Class does not support extended negotiation.

The release of an association shall not have any effect on the contents of the log managed by the SCP.

P.2 PROCEDURAL EVENT LOGGING SOP CLASS DEFINITION

The Procedural Event Logging SOP Class allows SCUs to report to an SCP the events that are to be recorded in a Procedure Log SOP Instance, as described in PS3.3. This allows multiple devices participating in a Study to cooperatively construct a log of events that occur during that Study.

The multiple procedural events reported through this SOP Class are related by Patient ID, Study Instance UID, Study ID, and/or Performed Location. The mechanism by which multiple devices obtain these shared identifiers is not defined by this SOP Class.

Note: The Modality Worklist or General Purpose Worklist SOP Classes may be used for this purpose. For simple devices that cannot support worklist SOP classes, the SCP may be able to use Performed Location, or the SCU AE Title, to relate the use of the device to a particular procedure.

Provided by IHS
No reproduction or networking permitted without license from IHS
Not for Resale

The SCP may also provide for recording events for which the SCU does not provide identifiers for matching. The mechanism by which the SCP determines the association of such an unidentified event with the log for a specific procedure is not defined by this SOP Class.

Note: The network address and/or AE Title of the SCU may be used to identify the device as a participant in a particular procedure.

P.2.1 DIMSE Service Group

The DIMSE-N Services applicable to the Procedural Event Logging SOP Class are shown in Table P.2-1.

Table P.2-1
DIMSE SERVICE GROUP

DIMSE Service Element	Usage SCU/SCP
N-ACTION	M/M

The DIMSE-N Services and Protocol are specified in PS 3.7.

P.2.2 Operation

The DICOM AEs which claim conformance to this SOP Class as an SCU shall invoke the N-ACTION request. The DICOM AEs which claim conformance to this SOP Class as an SCP shall support the N-ACTION request.

P.2.2.1 Action Information

The DICOM AEs which claim conformance to this SOP Class as an SCU and/or an SCP shall support the Action Type and Action Information in the N-ACTION-RQ as specified in Table P.2-2.

Table P.2-2
PROCEDURAL EVENT LOGGING ACTION INFORMATION

Action Type Name	Action Type ID	Attribute	Tag	Requirement Type SCU/SCP
Record Procedural Event	1	Specific Character Set	(0008,0005)	1C/1C (Required if an extended or replacement character set is used)
		Patient ID	(0010,0020)	2/2
		Study Instance UID	(0020,000D)	2/2
		Study ID	(0020,0010)	2/2
		Synchronization Frame of Reference UID	(0020,0200)	2/2
		Performed Location	(0040,0243)	2/2
		All other Attributes of the SR Document Content Module (PS3.3) using Procedure Log IOD Content Constraints		See Section P.2.2.1.3

--`,,```,,,,````-`-`,,`,,`,`,,`---

Provided by IHS
No reproduction or networking permitted without license from IHS Not for Resale

P.2.2.1.1 Study Matching Attributes

The SCU may provide Patient ID (0010,0020), Study Instance UID (0020,000D), Study ID (0020,0010), and/or Performed Location (0040,0243) attributes to allow the SCP to match the N-ACTION with a Study for which a procedure log is being created.

P.2.2.1.2 Synchronization Frame of Reference UID

The Synchronization Frame of Reference UID (0020,0200) attribute identifies the temporal frame of reference for the Observation DateTime (0040,A032) attributes in the Procedural Event record. If the Observation DateTime attribute values are not synchronized in an identifiable Frame of Reference, the attribute shall be zero length.

P.2.2.1.3 Constraints on Attributes of the SR Document Content Module

The Procedural Event record shall be conveyed in a (top level) Content Item, and subsidiary Content Items, as specified by the SR Document Content Module definition in PS3.3.

The top level and subsidiary Content Items shall be constructed in accordance with the Procedure Log IOD Content Constraints of PS3.3.

Notes: 1. These constraints specify use of BTID 3001 Procedure Log defined in PS3.16, and specific particular use of the Observation DateTime (0040,A032) attributes.

2. TID 3001 requires the explicit identification of the Observer Context of the top level CONTAINER through TID 1002.

3. There may be multiple events (subsidiary Content Items) included in a single N-ACTION-RQ message.

P.2.2.2 Service Class User Behavior

The SCU shall request logging of events that occur during a Study, using the N-ACTION request primitive.

The SCU shall receive N-ACTION responses. The actions taken upon a response status of Failure, or upon non-response of the SCP, are implementation dependent.

P.2.2.3 Service Class Provider Behavior

The SCP shall manage the creation of SOP Instances of the Procedure Log Storage Service. It shall receive, via the N-ACTION request primitive, requests for logging of events that occur during a Study. The SCP shall (consonant with application dependent constraints) incorporate those event records into a Procedure Log SOP Instance for the specified Study.

The SCP shall return, via the N-ACTION response primitive, the N-ACTION Response Status Code applicable to the associated action request.

P.2.2.4 Status Codes

The Service Class specific status values defined for the N-ACTION Service are specified in Table P.2-3. See PS 3.7 for additional general response status codes.

Table P.2-3
RESPONSE STATUS

Service Status	Response Status Code	Further Meaning
Success	0000	
Warning	B101	Specified Synchronization Frame of Reference UID does not match SCP Synchronization Frame of Reference
Warning	B102	Study Instance UID coercion; Event logged under a different Study Instance UID

Provided by IHS
No reproduction or networking permitted without license from IHS
Not for Resale

Warning	B104	IDs inconsistent in matching a current study; Event logged
Failure	C101	Procedural Logging not available for specified Study Instance UID
Failure	C102	Event Information does not match Template
Failure	C103	Cannot match event to a current study
Failure	C104	IDs inconsistent in matching a current study; Event not logged

P.2.2.5 Action Reply

With any response status indicating Success or Warning, the identifiers of the study into which the event has been logged shall be returned in the N-ACTION-RSP Action Reply as specified in Table P.2-4.

Table P.2-4
PROCEDURAL EVENT LOGGING ACTION REPLY

Action Type Name	Action Type ID	Attribute	Tag	Requirement Type SCU/SCP
Record Procedural Event	1	Study Instance UID	(0020,000D)	3/1
		Patient ID	(0010,0020)	3/1

P.2.3 Procedural Event Logging SOP Class UID

The Procedural Event Logging SOP Class shall be uniquely identified by the Procedural Event Logging SOP Class UID, which shall have the value "1.2.840.10008.1.40".

P.2.4 Procedural Event Logging Instance Identification

The well-known UID of the Procedural Event Logging SOP Instance shall have the value "1.2.840.10008.1.40.1".

P.2.5 Conformance Requirements

The DICOM AE's Conformance Statement shall be formatted as defined in PS 3.2.

P.2.5.1 SCU Conformance

The SCU shall document in its Conformance Statement the behavior and actions that cause the SCU to generate an N-ACTION primitive (Procedural Event Notification). It shall specify the Template used for constructing the Event Information, and the Coding Schemes used for coded entries in the Event Information.

The SCU shall document the identifiers it sends for matching purposes, and how it obtains those attributes (e.g., through a Modality Worklist query, manual entry, etc.).

The SCU shall document the behavior and actions performed when a success, warning, or failure status is received.

The SCU shall document the mechanisms used for establishing time synchronization and specifying the Synchronization Frame of Reference UID.

P.2.5.2 SCP Conformance

The SCP shall document in its Conformance Statement how it uses the identifiers it receives for matching the N-ACTION (Procedural Event Notification) to a specific procedure.

Provided by IHS
No reproduction or networking permitted without license from IHS
Not for Resale

The SCP shall document the behavior and actions that cause the SCP to generate a success, warning, or failure status for a received N-ACTION.

The SCP shall document the behavior and actions that cause the SCP to generate a Procedure Log SOP Instance including the received Event Information.

The SCP shall document how it assigns the value of the Observation Datetime (0040,A032) attribute when the SCU-provided Synchronization Frame of Reference UID is absent, or differs from that of the SCP.

Provided by IHS
No reproduction or networking permitted without license from IHS
Not for Resale

Annex Q Relevant Patient Information Query Service Class (Normative)

Q.1 OVERVIEW

The Relevant Patient Information Query Service Class defines an application-level class-of-service that facilitates the access to relevant patient information such as it is known at the time of query.

The query information model consists of two entities with a one-to-one relationship: the Patient and the Patient Information.

The Patient Information may be general, or specific to a particular imaging or procedure domain. A general SOP Class is defined along with some additional domain specific SOP Classes.

Q.2 DIMSE-C SERVICE GROUP

One DIMSE-C Service is used in the construction of SOP Classes of the Relevant Patient Information Query Service Class. The following DIMSE-C operation is used.

— C-FIND

Q.2.1 C-FIND Operation

SCPs of the Relevant Patient Information Query Service Class are capable of processing queries using the C-FIND operation as described in PS 3.7. The C-FIND operation is the mechanism by which queries are performed. The SCP shall provide Relevant Patient Information for at most one matching patient in the C-FIND response.

Q.2.1.1 C-FIND Service Parameters

Q.2.1.1.1 SOP Class UID

The SOP Class UID identifies the Relevant Patient Information Model and Template against which the C-FIND is to be performed. Support for the SOP Class UID is implied by the Abstract Syntax UID of the Presentation Context used by this C-FIND operation.

Q.2.1.1.2 Priority

The Priority Attribute defines the requested priority of the C-FIND operation with respect to other DIMSE operations being performed by the same SCP.

Processing of priority requests is not required of SCPs. Whether or not an SCP supports priority processing and the meaning of the different priority levels shall be stated in the Conformance Statement of the SCP.

Q.2.1.1.3 Identifier

Both the C-FIND request and response contain an Identifier encoded as a Data Set (see PS 3.5).

Q.2.1.1.3.1 Request Identifier Structure

An Identifier in a C-FIND request shall contain:

— Key Attributes with values to be matched against the values of Attributes specified in the SOP Class.
— Content Template Sequence (0040,A504), which shall include a single sequence item containing the Template Identifier (0040,DB00) and Mapping Resource (0008,0105) attributes, to identify the template structure to use in the matching C-FIND responses.

Provided by IHS
No reproduction or networking permitted without license from IHS Not for Resale

— Conditionally, the Attribute Specific Character Set (0008,0005). This Attribute shall be included if expanded or replacement character sets may be used in any of the Attributes in the Request Identifier. It shall not be included otherwise.

The Key Attributes and values allowable for the query are defined in the SOP Class definition for the Relevant Patient Information Model.

Q.2.1.1.3.2 Response Identifier Structure

The C-FIND response shall not contain Attributes that were not in the request or specified in this section.

An Identifier in a C-FIND response shall contain:

— Key Attributes with values corresponding to Key Attributes contained in the Identifier of the request.
— Content Template Sequence (0040,A504), which shall include a single sequence item containing the Template Identifier (0040,DB00) and Mapping Resource (0008,0105) attributes, to identify the template structure used in the C-FIND response. The values shall be the same as specified in the Request Identifier.
— Conditionally, the Attribute Specific Character Set (0008,0005). This Attribute shall be included if expanded or replacement character sets may be used in any of the Attributes in the Response Identifier. It shall not be included otherwise. The C-FIND SCP is not required to return responses in the Specific Character Set requested by the SCU if that character set is not supported by the SCP. The SCP may return responses with a different Specific Character Set.

Q.2.1.1.3.3 Relevant Patient Information Templates

Templates used in the Relevant Patient Information query are defined in PS 3.16.

The template specified in the Request Identifier shall not use by-reference relationships.

Q.2.1.1.4 Status

Table Q.2-1 defines the status code values that might be returned in a C-FIND response. Fields related to status code values are defined in PS 3.7.

Table Q.2-1
C-FIND RESPONSE STATUS VALUES

Service Status	Further Meaning	Status Codes	Related Fields
Failure	Out of Resources	A700	(0000,0902)
	Identifier Does Not Match SOP Class	A900	(0000,0901) (0000,0902)
	Unable to process	C000	(0000,0901) (0000,0902)
	More than one match found	C100	(0000,0901) (0000,0902)
	Unable to support requested template	C200	(0000,0901) (0000,0902)
Cancel	Matching terminated due to Cancel request	FE00	None
Success	Success. Matching is complete - No final Identifier is supplied.	0000	None
Pending	Current Match is supplied.	FF00	Identifier

Provided by IHS
No reproduction or networking permitted without license from IHS
Not for Resale

Note: Status Codes are returned in DIMSE response messages (See PS 3.7). The code values stated in column "Status Codes" are returned in Status Command Element (0000,0900).

Q.3 ASSOCIATION NEGOTIATION

Association establishment is the first phase of any instance of communication between peer DICOM AEs. The Association negotiation procedure specified in PS 3.7 shall be used to negotiate the supported SOP Class.

SOP Class Extended Negotiation is not defined for this Service Class.

Q.4 DIMSE-C C-FIND SERVICE

The DIMSE-C C-FIND service is the operation by which relevant patient information is queried and provided.

Q.4.1 Conventions

Key Attributes in the Request Identifier serve two purposes. They may be used as Matching Key Attributes and Return Key Attributes. Matching Key Attributes may be used for matching (criteria to be used in the C-FIND request to determine whether an entity matches the query). Return Key Attributes may be used to specify desired return Attributes (what elements in addition to the Matching Key Attributes have to be returned in the C-FIND response).

Matching Key Attributes may be of Type "required" (R) or "optional" (O). Return Key Attributes may be of Type 1, 1C, 2, 2C, 3 as defined in PS 3.5.

Q.4.2 Service Definition

Two peer DICOM AEs implement this Relevant Patient Information Query Service Class with one serving in the SCU role and one serving in the SCP role. The SOP Class is implemented using the DIMSE-C C-FIND service as defined in PS 3.7.

Only a baseline behavior of the DIMSE-C C-FIND is used in this Service Class.

A C-FIND service conveys the following semantics:

— The SCU requests that the SCP perform a match for the Matching Keys and return values for the Return Keys that have been specified in the Identifier of the request, against the Relevant Patient Information that the SCP possesses.

Note: In this Annex, the term "Identifier" refers to the Identifier service parameter of the C-FIND service as defined in PS 3.7.

— The SCP generates a C-FIND response for at most one match with an Identifier containing the values of all Matching Key Attributes and all known Return Key Attributes requested. The response contains one relevant patient information instance in the form that matches the Template that was requested. This response shall contain a status of Pending.

— When the process of matching is complete, with zero or one match, a C-FIND response is sent with a status of Success and no Identifier.

— A Failed response to a C-FIND request indicates that the SCP is unable to process the request. This shall be used to indicate that the requested template is not supported by the SCP, or that more than one match was found by the SCP.

Provided by IHS
No reproduction or networking permitted without license from IHS
Not for Resale

— The SCU may cancel the C-FIND service by issuing a C-FIND-CANCEL request at any time during the processing of the C-FIND service. The SCP will interrupt all matching and return a status of Canceled.

Note: The SCU needs to be prepared to receive C-FIND responses sent by the SCP until the SCP finally processes the C-FIND-CANCEL request.

Q.4.3 Relevant Patient Information Model SOP Classes

Q.4.3.1 Relevant Patient Information Model

In order to serve as a Service Class Provider (SCP) of one or more Relevant Patient Information Model SOP Classes, a DICOM Application Entity (AE) possesses relevant information about patients. This information is organized into a Relevant Patient Information Model.

The SOP Classes are composed of both the Information Model and a DIMSE-C Service Group.

Q.4.3.1.1 E/R Model

The E/R Model consists of Patient and Structured Information, with no relationship to other Information Entities in the DICOM Information model.

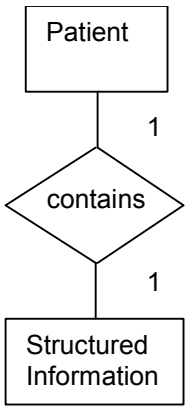

Figure Q.4-1 Relevant Patient Information E/R Model

The Patient IE includes the attributes of the Patient Identification and Patient Demographics Modules.

The Structured Information IE includes attributes that are not inherently related to a real-world entity, but are interpreted through their coded content. This includes the attributes of the Structured Document Content Module, which in the case of the Relevant Patient Information Query Service has its content constrained by specified templates to convey patient related information. Also included in the Structured Information IE are attributes of the SOP Common and Common Instance Reference Modules that support the interpretation of coded data, or support access to referenced information objects identified in the coded data.

Q.4.3.1.2 Relevant Patient Information Attributes

Table Q.4-1 defines the Attributes of the Relevant Patient Information Model:

Table Q.4-1 Attributes for the Relevant Patient Information Model

Description / Module	Tag	Matching Key Type	Return Key Type	Remark / Matching Type

--`,,```,,,,````-`-`,,`,,`,`,,`---

Provided by IHS
No reproduction or networking permitted without license from IHS
Not for Resale

Description / Module	Tag	Matching Key Type	Return Key Type	Remark / Matching Type
Patient				
Patient's Name	(0010,0010)	-	1	
Patient ID	(0010,0020)	R	1	Shall be present in the Request Identifier. Shall be retrieved with Single Value Matching. Note: Since only one response is expected, this is a unique key.
Issuer of Patient ID	(0010,0021)	R	2	Shall be retrieved with Single Value Matching. In situations where there are multiple issuers, this key constrains matching of Patient ID (0010,0020) to a domain in which the Patient ID (0010,0020) is unique.
Patient's Birth Date	(0010,0030)	-	2	
Patient's Sex	(0010,0040)	-	2	
All other Attributes of the Patient Identification module		-	3	
All other Attributes of the Patient Demographic module		-	3	
Structured Information (SR Document Content Module)				
Observation DateTime	(0040,A032)	-	1	
Value Type	(0040,A040)	-	1	See Q.4.3.1.2.1.
Concept Name Code Sequence	(0040,A043)	-	1	See Q.4.3.1.2.1.
>Code Value	(0008,0100)	-	1	
>Coding Scheme Designator	(0008,0102)	-	1	
>Coding Scheme Version	(0008,0103)	-	1C	Required if the value of Coding Scheme Designator (0008,0102) is not sufficient to identify the Code Value (0008,0100) unambiguously.
>Code Meaning	(0008,0104)	-	1	
>All other Attributes of the Concept Name Code Sequence				
Content Sequence	(0040,A730)	-	2	See Q.4.3.1.421.
>All Attributes of the Content Sequence		-	-	Content Items as provided by the SCP. Requirements on Content Item Attribute Types shall be in accordance with the definitions in the

Provided by IHS
No reproduction or networking permitted without license from IHS
Not for Resale

Description / Module	Tag	Matching Key Type	Return Key Type	Remark / Matching Type
				SR Document Content Module.
HL7 Structured Document Reference Sequence	(0040,A390)	-	1C	
>Referenced SOP Class UID	(0008,1150)	-	1	
>Referenced SOP Instance UID	(0008,1155)	-	1	
>HL7 Instance Identifier	(0040,E001)	-	1	
>Retrieve URI	(0040,E010)	-	3	
Structured Information (Common Instance Reference Module)				
Studies Containing Other Referenced Instances Sequence	(0008,1200)	-	1C	Required if Content Sequence (0040,A390) includes Content Items that reference SOP Instances that use the Patient/Study/Series/Instance information model.
>Referenced Series Sequence	(0008,1115)	-	1	
>>Series Instance UID	(0020,000E)	-	1	
>>Referenced Instance Sequence	(0008,114A)	-	1	
>>>Referenced SOP Class UID	(0008,1150)	-	1	
>>>Referenced SOP Instance UID	(0008,1155)	-	1	

The attributes in Table Q.4-2 are not part of the Information Model; their inclusion in the C-FIND request and response identifier are governed by rules in sections Q.2.1.1.3.1 and Q.2.1.1.3.2, respectively.

Table Q.4-2 Additional C-FIND Identifier Attributes

Attribute	Tag	Type in Request Identifier	Type in Response Identifier	Remark
Content Template Sequence	(0040,A504)	1	1	
>Mapping Resource	(0008,0105)	1	1	
>Template Identifier	(0040,DB00)	1	1	
Specific Character Set	(0008,0005)	1C	1C	Required if expanded or replacement character sets are used. See Q.2.1.1.3,

Q.4.3.1.2.1 Relevant Patient Information Attribute Descriptions

Concept Name Code Sequence (0040,A043) in a C-FIND Response shall have one sequence item that identifies the Root node concept of the returned structure. This shall be the same as

Provided by IHS
No reproduction or networking permitted without license from IHS
Not for Resale

the Concept Name of the first row of the template identified in the Content Template Sequence (0040,A504) in the Identifier. The Concept Name Code Sequence (0040,A043) shall always be sent zero length in the Request Identifier.

The Value Type (0040,A040) applies to the Concept Name Code Sequence (0040,A043), and shall be the same as the Value Type (0040,A040) of the first row of the template identified in the Content Template Sequence (0040,A504) in the Identifier.

The Content Sequence (0040,A730) is a potentially recursively nested Sequence of Items, as described in PS 3.3, SR Document Content Module. The Content Sequence shall always be sent zero length in the Request Identifier. The Content Sequence in the data set of the Response shall contain the content items of the requested template.

Q.4.3.2 Conformance Requirements

An implementation may conform to the Relevant Patient Information Model SOP Classes as an SCU and/or as an SCP.

The Conformance Statement shall be in the format defined in PS 3.2.

Q.4.3.2.1 SCU Conformance

An implementation which conforms to one or more of the Relevant Patient Information Model SOP Classes shall support queries against the Relevant Patient Information Model described in Section Q.4.3.1 using the baseline C-FIND SCU Behavior described in Section Q.4.2.

An implementation which conforms to one or more of the Relevant Patient Information Model SOP Classes as an SCU shall state in its Conformance Statement which SOP Class(es) it supports, and which Root template(s) it may request in a query if not specified by the SOP Class. The Conformance Statement shall also state the definition of any supported template extensions.

Q.4.3.2.2 SCP Conformance

An implementation which conforms to one or more of the Relevant Patient Information Model SOP Classes shall support queries against the Relevant Patient Information Model described in Section Q.4.3.1 using the baseline C-FIND SCP Behavior described in Section Q.4.2.

An implementation which conforms to one or more of the Relevant Patient Information Model SOP Classes as an SCP shall state in its Conformance Statement which SOP Class(es) it supports, and which Root template(s) it will support in a query response if not specified by the SOP Class. The Conformance Statement shall also state the definition of any supported template extensions.

An implementation which conforms to one or more of the Relevant Patient Information Model SOP Classes as an SCP shall state in its Conformance Statement how it makes use of Specific Character Set (0008,0005) when interpreting queries, performing matching, and encoding responses.

Q.4.3.3 SOP Classes

The Relevant Patient Information Model SOP Classes in the Relevant Patient Information Query Service Class identify the Relevant Patient Information Model, and the DIMSE-C operation supported. In some instances a Root template is specified. The Standard SOP Classes are defined in Table Q.4-2:

Table Q.4-2
SOP Classes for the Relevant Patient Information Model

SOP Class Name	SOP Class UID	Root Template
General Relevant Patient Information Query	1.2.840.10008.5.1.4.37.1	TID 9007 General Relevant Patient Information, or from the

Provided by IHS
No reproduction or networking permitted without license from IHS
Not for Resale

		list in PS 3.16
Breast Imaging Relevant Patient Information Query	1.2.840.10008.5.1.4.37.2	TID 9000 Relevant Patient Information for Breast Imaging
Cardiac Relevant Patient Information Query	1.2.840.10008.5.1.4.37.3	TID 3802 Cardiovascular Patient History

Note: The list of Root templates for the General Relevant Patient Information Query is extensible.

Q.5 RELEVANT PATIENT INFORMATION QUERY EXAMPLE (INFORMATIVE)

Moved to PS 3.17.

--`,,```,,,,````-`-`,,`,,`,`,,`---

Provided by IHS
No reproduction or networking permitted without license from IHS Not for Resale

Annex R INSTANCE AVAILABILITY NOTIFICATION SERVICE CLASS (Normative)

R.1 OVERVIEW

R.1.1 Scope

The Instance Availability Notification Service Class defines an application-level class-of-service that allows one DICOM AE to notify another DICOM AE of the presence and availability of SOP instances that may be retrieved. The AE from which such SOP Instances can later be retrieved may or may not be the SCU performing the notification.

Note: An example of usage of this Service Class is for the receiver of the instances to provide notification of their arrival and availability for subsequent workflow steps to a different entity, such as a separate workflow manager.

The SCU implementation defines the conditions under which it provides the notification. Certain SCUs may provide notification for arbitrary sets of SOP Instances, while other SCUs may provide notification when they determine that the instances associated with a Procedure Step or a Requested Procedure are available. The SCU is required to document in its Conformance Statement the nature of its notification decisions (e.g., frequency of notifications, retrieve capabilities and latency, etc.).

Once the SCU has provided notification about availability of the SOP Instances, the SCP may use that information in directing further workflow, such as in populating the Input Information Sequence and Relevant Information Sequence when forming General Purpose Scheduled Procedure Step. These types of policies are outside the scope of this Standard, however, the SCP is required to document these policies in its Conformance Statement.

The SCU of this Service Class is not required to assure that the study, procedure step or any workflow-related entity is “complete”; indeed no semantics other than the concept of “availability” is expressed or implied by the use of this service.

Notes: 1. The Performed Workitem Code Sequence (0040,4019) attribute of a referenced GP-PPS instance may provide the specific description of the work item that triggered the Instance Availability Notification.

2. The Instance Availability Notification is typically a service of the composite instance Storage SCP, since that application is responsible for making the instances available. The Instance Availability Notification allows that application to report the specific Retrieve AE Title, which may differ from the Storage Service AE Title, and which may vary with different instance SOP Classes, or may vary over time.

R.2 CONFORMANCE OVERVIEW

The Instance Availability Notification Service Class consists of a single SOP Class: the Instance Availability Notification SOP Class.

The SOP Class specifies Attributes, operations, and behavior applicable to the SOP Class. The conformance requirements shall be specified in terms of the Service Class Provider (SCP) and the Service Class User (SCU).

The Instance Availability Notification Service Class uses the Instance Availability Notification IOD as defined in PS 3.3 and the N-CREATE DIMSE Service specified in PS 3.7.

Provided by IHS
No reproduction or networking permitted without license from IHS Not for Resale

R.3 INSTANCE AVAILABILITY NOTIFICATION SOP CLASS

R.3.1 DIMSE Service Group

The DIMSE Services shown in Table R.3.1-1 are applicable to the Instance Availability Notification IOD under the Instance Availability Notification SOP Class.

Table R.3.1-1
DIMSE SERVICE GROUP

DIMSE Service Element	Usage SCU/SCP
N-CREATE	M/M

The DIMSE Services and Protocols are specified in PS 3.7.

Note: Though the terminology “notification” is used for this Service Class, the notification is in fact performed through Operations rather than Notifications.

R.3.2 Operations

The Application Entity that claims conformance to this SOP Class as an SCU shall be permitted to invoke the following operations and the Application Entity that claims conformance as an SCP shall be capable of providing the following operations.

R.3.2.1 N-CREATE Instance Availability Notification SOP Instance

This operation allows an SCU to create an instance of the Instance Availability Notification SOP Class and to provide availability information about Instances that are under the control of the SCU. This operation shall be invoked through the DIMSE N-CREATE Service.

R.3.2.1.1 Attributes

The Attribute list of the N-CREATE is defined as shown in Table R.3.2-1.

Table R.3.2-1
INSTANCE AVAILABILITY NOTIFICATION SOP CLASS N-CREATE ATTRIBUTES

Attribute Name	Tag	Req. Type N-CREATE (SCU/SCP)
Specific Character Set	(0008,0005)	1C/1C (Required if an extended or replacement character set is used)
All other Attributes of SOP Common Module		3/3
Referenced Performed Procedure Step Sequence	(0008,1111)	2/2
>Referenced SOP Class UID	(0008,1150)	1/1
>Referenced SOP Instance UID	(0008,1155)	1/1
>Performed Workitem Code Sequence	(0040,4019)	2/2
>>Code Value	(0008,0100)	1/1
>>Coding Scheme Designator	(0008,0102)	1/1
>>Code Meaning	(0008,0104)	1/1

--`,,```,,,,````-`-`,,`,,`,`,,`---

Provided by IHS
No reproduction or networking permitted without license from IHS Not for Resale

>>All other Attributes from Performed Workitem Code Sequence		3/3
Study Instance UID	(0020,000D)	1/1
Referenced Series Sequence	(0008,1115)	1/1
>Series Instance UID	(0020,000E)	1/1
>Referenced SOP Sequence	(0008,1199)	1/1
>>Referenced SOP Class UID	(0008,1150)	1/1
>>Reference SOP Instance UID	(0008,1155)	1/1
>>Instance Availability	(0008,0056)	1/1
>>Retrieve AE Title	(0008,0054)	1/1
>>Storage Media File-Set ID	(0088,0130)	3/3
>>Storage Media File-Set UID	(0088,0140)	3/3

R.3.2.1.2 Service Class User

The SCU shall specify in the N-CREATE request primitive the SOP Class and SOP Instance UIDs of the Instance Availability Notification SOP Instance which is created and for which Attribute Values are to be provided.

The SCU shall provide Attribute values for the Instance Availability Notification SOP Class Attributes as specified in Table R.3.2-1.

The use of additional optional Attributes by the SCU is forbidden.

Note: The reason for forbidding optional attributes is to prevent the use of Standard Extended SOP Classes that might add contextual information such as patient and procedure identifiers.

The encoding rules for Instance Availability Notification Attributes are specified in the N-CREATE request primitive specification in PS 3.7.

There are no requirements on when N-CREATE requests are required to be performed.

In particular, there are no requirements that notification about the availability of the first instance of a Performed Procedure Step or Study be provided upon its reception, nor that availability notification be provided when an entire set of instances comprising a completed Performed Procedure Step or Study are available, though these are typical and common scenarios.

R.3.2.1.3 Service Class Provider

The SCP shall return, via the N-CREATE response primitive, the N-CREATE Response Status Code applicable to the associated request.

R.3.2.1.4 Status Codes

There are no specific status codes. See PS 3.7 for response status codes.

R.3.3 Instance Availability Notification SOP Class UID

The Instance Availability Notification SOP Class shall be uniquely identified by the Instance Availability Notification SOP Class UID, which shall have the value "1.2.840.10008.5.1.4.33".

R.3.4 Conformance Requirements

Implementations shall include within their Conformance Statement information as described below.

Provided by IHS
No reproduction or networking permitted without license from IHS
Not for Resale

An implementation may conform to this SOP Class as an SCU or as an SCP. The Conformance Statement shall be in the format defined in Annex A of PS 3.2.

R.3.4.1 SCU Conformance

An implementation that is conformant to this SOP Class as an SCU shall meet conformance requirements for the operations that it invokes.

R.3.4.1.1 Operations

Any Attributes for which Attribute Values may be provided (using the N-CREATE) by the SCU shall be enumerated in the SCU Conformance Statement. The SCU Conformance Statement shall be formatted as defined in Annex A of PS 3.2.

An implementation that conforms to this SOP Class as an SCU shall specify under which conditions during the performance of real-world activities it will create the SOP Class Instance.

The SCU Conformance Statement shall specify what is meant by each reported value of Instance Availability (0008,0056).

The SCU Conformance Statement shall describe the relationship between the Instance Availability Notification and the Performed Procedure Step SOP Classes, if the latter are supported.

R.3.4.2 SCP Conformance

An implementation that is conformant to this SOP Class as an SCP shall meet conformance requirements for the operations that it performs.

R.3.4.2.1 Operations

The SCP Conformance Statement shall be formatted as defined in Annex A of PS 3.2.

The SCP Conformance Statement shall provide information on the behavior of the SCP (in terms of real world activities) for each reported value of Instance Availability (0008,0056).

The SCP Conformance Statement shall describe the behavioral relationship between the Instance Availability Notification and the Performed Procedure Step SOP Classes, if the latter are supported.

Provided by IHS
No reproduction or networking permitted without license from IHS
Not for Resale

Annex S MEDIA CREATION MANAGEMENT SERVICE CLASS (Normative)

S.1 OVERVIEW

S.1.1 Scope

The Media Creation Management Service Class defines a mechanism by which an SCU can instruct a device to create Interchange Media containing a set of Composite SOP Instances that have already been transferred to the media creation device using the Storage Service Class.

This Service Class does not address archival storage requirements. It is intended only for the management of media creation devices. There is no requirement by the Standard that an SCP of this Service Class will commit to taking responsibility for archival of Composite Instances, such that an SCU may then discard them. Such behavior is entirely outside the scope of the Standard. In other words, Media Creation does not imply Storage Commitment.

The application profile(s) for the set of instances – which implies the form of the media created (i.e., CD, DVD or MOD) – can either be left to the discretion of the SCP, or explicitly specified in the media creation request. In the latter case, if the device is unable to create the requested profiles, an error shall be returned.

Notes: 1. More than one profile may be requested or used by default, since the requested set of instances may not be compatible with a single profile. DICOM media may always contain instances written by more than one profile. See PS 3.2.

2. It is the responsibility of the SCU to negotiate and store instances with an appropriate Transfer Syntax should a specific Transfer Syntax be required by a requested profile. The SCP is not required to support compression or decompression of stored instances in order to convert stored instances into a form suitable for a requested profile. It may do so, if so requested, but the level of lossy compression would be at the discretion of the SCP. If the degree of compression is important to the application, then the SCU may compress the images before sending them to the SCP.

The request controls whether or not a label is to be generated on the media, be it from information contained in the instances (such as patient demographics) or from text explicitly specified in the request.

Notes: 1. An SCP may or may not be physically capable of labeling the media. This capability is outside the scope of conformance to the Standard. Inability to create a label is not an error.

2. De-identification of instances (and labels), such as for teaching file media or clinical trial media is the responsibility of the SCU and is outside the scope of this service. That is, the SCU must de-identify the composite instances before sending them, prior to the media creation request.

The Service Class contains a limited capability to return status information. A media creation request may initially either fail or be accepted. Subsequently, the SCP may be polled as to the status of the request (idle, pending/creating, successful or failed) by the SCU on the same or on a separate Association. There is no asynchronous notification. There is no dependence on the duration or persistence of an Association.

Note: There is no requirement to manage the handling of transient failures (such as an empty supply of blank media or labels or ink). Whether or not the SCP queues stored instances and requests in such cases, or fails to accept the request, is outside the scope of the Standard.

--`,,```,,,,````-`-`,,`,,`,`,,`---

Provided by IHS
No reproduction or networking permitted without license from IHS Not for Resale

S.2 CONFORMANCE OVERVIEW

The application-level services addressed by this Service Class are specified via the Media Creation Management SOP Class.

The Media Creation Management SOP Class specifies attributes, operations and behavior applicable to the SOP Class. The conformance requirements shall be specified in terms of the Service Class Provider (SCP) and the Service Class User (SCU).

The Media Creation Management Service Class uses the Media Creation Management IOD as defined in PS 3.3 and the N-CREATE, N-ACTION and N-GET Services specified in PS 3.7.

S.2.1 Association Negotiation

Association establishment is the first phase of any instance of communication between peer DICOM AEs. The Association negotiation rules as specified in PS 3.7 shall be used to negotiate the supported SOP Classes.

Support for the SCP/SCU role selection negotiation is not applicable. The SOP Class Extended Negotiation is not defined for this Service Class.

S.3 MEDIA CREATION MANAGEMENT SOP CLASS

The SCU transmits the SOP Instances to the SCP using the Storage Service Class. The request for media creation is transmitted to the SCP and contains a list of references to one or more SOP Instances. Success or failure of media creation is subsequently indicated by the SCU requesting the status from the SCP on the same or a separate association.

S.3.1 DIMSE Service Group

The following DIMSE-N Services are applicable to the Media Creation Management SOP Class.

DIMSE Service Element	Usage SCU/SCP
N-CREATE	M/M
N-ACTION	M/M
N-GET	U/M

The DIMSE-N Services and Protocol are specified in PS 3.7.

S.3.2 Operations

The DICOM AEs that claim conformance to this SOP Class as an SCU shall invoke the N-CREATE and the N-ACTION operations. The DICOM AEs that claim conformance to this SOP Class as an SCP shall support the N-CREATE, the N-ACTION and the N-GET operations.

S.3.2.1 Create a Media Creation Request

The Create a Media Creation Request operation allows an SCU to create an instance of the Media Creation Management SOP Class and initialize Attributes of the SOP Class. The SCP uses this operation to create a new media creation request containing the set of SOP Instances that shall be included in the Interchange Media. This operation shall be invoked through the N-CREATE primitive

--`,,```,,,,````-`-`,,`,,`,`,,`---

Provided by IHS
No reproduction or networking permitted without license from IHS Not for Resale

S.3.2.1.1 Attributes

The DICOM AEs that claim conformance to this SOP Class as an SCU may choose to provide a subset of the Attributes maintained by the SCP. The DICOM AEs that claim conformance to this SOP Class as an SCP shall support a subset of the Media Creation Management specified in Table S.3.2.1.1-1.

Table S.3.2.1.1-1
MEDIA CREATION MANAGEMENT – N-CREATE ATTRIBUTES

Attribute	Tag	Requirement Type SCU/SCP
Specific Character Set	(0008,0005)	1C/1C (Required if expanded or replacement character set is used)
Storage Media File-Set ID	(0088,0130)	3/3 See Section S.3.2.1.1.1.
Storage Media File-Set UID	(0088,0140)	3/3 See Section S.3.2.1.1.1.
Label Using Information Extracted From Instances	(2200,0001)	3/1C See Section S.3.2.1.1.4.
Label Text	(2200,0002)	3/1C See Section S.3.2.1.1.4.
Label Style Selection	(2200,0003)	3/1C See Section S.3.2.1.1.4.
Barcode Value	(2200,0005)	3/3 See Section S.3.2.1.1.4
Barcode Symbology	(2200,0006)	3/3 See Section S.3.2.1.1.4
Media Disposition	(2200,0004)	3/3 See Section S.3.2.1.1.5.
Allow Media Splitting	(2200,0007)	3/1C See Section S.3.2.1.1.6
Allow Lossy Compression	(2200,000F)	3/1C See Section S.3.2.1.1.9
Include Non-DICOM Objects	(2200,0008)	3/1C See Section S.3.2.1.1.7
Include Display Application	(2200,0009)	3/1C See Section S.3.2.1.1.8
Preserve Composite Instances After Media Creation	(2200,000A)	3/3
Referenced SOP Sequence	(0008,1199)	1/1
>Referenced SOP Class UID	(0008,1150)	1/1
>Referenced SOP Instance UID	(0008,1155)	1/1
>Requested Media Application Profile	(2200,000C)	3/1 See Section S.3.2.1.1.2.
>Icon Image Sequence	(0088,0200)	3/1C

Provided by IHS
No reproduction or networking permitted without license from IHS
Not for Resale

		See Section S.3.2.1.1.3.

S.3.2.1.1.1 Storage Media File-set Attributes

If present, the Storage Media File-Set ID (0088,0130) and Storage Media File-Set UID (0088,0140) shall be used on the media created. If absent, the media shall contain values generated by the SCP.

If the media request will not fit on a single volume (single piece or side of media), then whether or not the SCP ignores Storage Media File-Set ID (0088,0130), or uses it as a prefix and appends information to distinguish volumes, is implementation dependent. Different values of Storage Media File-Set UID (0088,0140) shall be used for different volumes.

If multiple copies are requested, the same Storage Media File-Set ID (0088,0130) and Storage Media File-Set UID (0088,0140) shall be used on all copies.

Note: Care should be taken with multiple copies written to rewritable media that their contents do not diverge even though their identifiers are identical.

S.3.2.1.1.2 Requested Media Application Profile

The Requested Media Application Profile (2200,000C), if present, shall be used by the SCP for the specified SOP Instance. If absent for a particular instance, the choice of Media Application Profile for that instance shall be at the discretion of the SCP.

Notes: 1. Different Media Application Profiles may be used for different instances on the same piece of media.

2. The form of the DICOMDIR directory records that the SCP must create may be significantly influenced by the media application profiles used.

S.3.2.1.1.3 Icon Image Sequence

The Icon Image Sequence (0088,0200), if present:

- shall be used by the SCP for inclusion in the instance-level DICOM Directory Record for the specified SOP Instance, if the Media Application Profile requires its inclusion, and the icon supplied by the SCU meets the requirements of the profile
- may be used by the SCP for inclusion in the instance-level DICOM Directory Record for the specified SOP Instance, if the Media Application Profile does not require its inclusion

If absent for a particular instance, the choice of Media Application Profile for that instance dictates whether or not the SCP is required to create its own Icon Image Sequence (0088,0200) from the contents of the SOP Instance.

Notes: 1. Some Media Application Profiles require the inclusion of an Icon Image Sequence (0088,0200) in the directory records.

2. Some Media Application Profiles specify constraints on the form of the Icon Image Sequence (0088,0200).

3. The SCP may choose to extend the Media Application Profile by generating and including icons anyway.

S.3.2.1.1.4 Labeling

The SCP may or may not have the capability to print a label on (or for) the media. If it does, then the following SCP behavior shall apply and the specified attributes are required to be supported by the SCP.

Provided by IHS
No reproduction or networking permitted without license from IHS
Not for Resale

The Label Using Information Extracted From Instances (2200,0001) attribute is a flag that instructs the SCP whether or not to create any label using the Patient and Study information contained within the instances themselves.

Note: The SCP may implement whatever it considers to be an appropriate subset of any attributes of any Modules at the Patient, Specimen and Study entities in the DICOM Information Model specified in PS 3.3. Typically included are such attributes as Patient Name (0010,0010), Patient ID (0010,0020), Study ID (0020,0010), and Study Date (0008,0020).

The Label Text (2200,0002) attribute is additional text that the SCP shall include on any label, either in addition to or instead of any extracted demographics, depending on the value of Label Using Information Extracted From Instances (2200,0001).

The Label Style Selection (2200,0003) attribute is a code string, which if present, may be used by the SCP to choose one or more implementation-dependent styles of labeling.

The Barcode Value (2200,0005) and the Barcode Symbology (2200,0006), if present, may be used by the SCP to print a barcode on the label.

Note It is SCU responsibility to convey a value for the Barcode Value (2200,0005) Attribute consistent in length and content with the requested Barcode Symbology (2200,0006).

S.3.2.1.1.5 Media Disposition

The Media Disposition (2200,0004), if present, may be used by the SCP to determine where and to whom to send the media when completed.

Note: For example, it may contain the name and address of a referring doctor, and be used to print a label for an envelope or mailer, or as additional material to be printed on the media label.

S.3.2.1.1.6 Allow Media Splitting

The SCP may or may not have the capability to split a request over more than one piece of media (e.g. if it doesn't fit on one). If it does, then the following SCP behavior shall apply and the specified attributes are required to be supported by the SCP.

The Allow Media Splitting Attribute (2200,0007) shall be used by the SCP to determine if it is permitted to split this request over more than one piece of media.

Notes: 1. If the file-set size exceeds the media storage capacity, and this flag has been set to NO, the SCP shall refuse to process the request.

2. If the requested Media Application Profile allows for lossless compression, and images are not already compressed, such compression may be applied by the SCP in order to fit all instances on a single piece of media. This also applies to lossy compression if it has not been allowed by the value of Allow Lossy Compression (2200,000F).

S.3.2.1.1.7 Include Non-DICOM Objects

The SCP may or may not have the capability to include on the created media additional Non-DICOM objects (e.g., HTML files, JPEG images) that are a rendering of the DICOM instances. If it does, then the following SCP behavior shall apply and the specified attributes are required to be supported by the SCP.

The Include Non-DICOM Objects (2200,0008) shall be used to request the SCP to add additional Non-DICOM objects onto the created media.

--`,,```,,,,````-`-`,,`,,`,`,,`---

Provided by IHS
No reproduction or networking permitted without license from IHS Not for Resale

An SCP is not required to be able to add such files. Inability to add Non-DICOM objects is not an error.

If Include Non-DICOM Objects (2200,0008) is set to NO, the SCP shall not include additional non-DICOM objects on the media.

S.3.2.1.1.8 Include Display Application

The SCP may or may not have the capability to include on the created media an application for displaying DICOM instances. If it does, then the following SCP behavior shall apply and the specified attributes are required to be supported by the SCP.

The Include Display Application (2200,0009) shall be used to request the SCP to add an application for displaying DICOM instances onto the created media.

An SCP is not required to be able to add such an application. Inability to add a display application is not an error.

Whether the display application is capable of displaying all stored instances is beyond the scope of the standard.

Whether the display application automatically executes when media is inserted for reading is beyond the scope of the standard.

Which platforms are supported by the display application(s) is beyond the scope of the standard.

Note: Multiple files may need to be included in the media to support the display application, rather than a single executable file, and these may be present, even if the Include Non-DICOM Objects (2200,0008) Attribute has a value of NO.

If Include Display Application (2200,0009) is set to NO, the SCP shall not include a display application on the media.

S.3.2.1.1.9 Allow Lossy Compression

If Allow Lossy Compression (2200,000F) has a value of YES, the SCP is allowed to perform lossy compression under the following circumstances:

- if it receives uncompressed or lossless compressed images yet is requested to use a profile that requires lossy compression, or
- if Allow Media Splitting (2200,0007) is NO, and the request would otherwise need to be split across media.

If Allow Lossy Compression (2200,000F) has a value of YES but the requested profile does not permit lossy compression, lossy compression shall not be performed.

The level of compression is at the SCP's discretion.

The SCP shall not decompress and recompress already lossy compressed images, but may use images that have already been lossy compressed.

The SCP is never required to perform lossy compression.

If Allow Lossy Compression (2200,000F) has a value of NO, the SCP is not allowed to perform lossy compression. If Allow Lossy Compression (2200,000F) has a value of NO and the requested profile requires lossy compression, an error shall be returned.

Provided by IHS
No reproduction or networking permitted without license from IHS Not for Resale

S.3.2.1.2 Service Class User Behavior

The SCU shall use the N-CREATE primitive to inform the SCP that a new media creation request has been placed and to convey the proprieties of this request. The request proprieties (e.g. the set of SOP Instances that the creating interchange media shall contain) are referenced in the IOD Attributes as specified in Table S.3.2.1.1-1.

Upon receipt of a successful N-CREATE Response Status Code from the SCP, the SCU now knows that the SCP has received the N-CREATE request and a new media creation request has been created.

Upon receipt of a failure N-CREATE Response Status Code from the SCP, the SCU now knows that the SCP will not process the request. The actions taken by the SCU upon receiving the status is beyond the scope of this Standard.

At any time after receipt of the N-CREATE-Response, the SCU may release the association on which it sent the N-CREATE-Request.

Notes: An N-GET of the corresponding of the Media Creation Management SOP Class may be performed on the same or subsequent associations.

S.3.2.1.3 Service Class Provider Behavior

Upon receipt of the N-CREATE request, the SCP shall return, via the N-CREATE response primitive, the N-CREATE Response Status Code applicable to the associated request. A success status conveys that the SCP has successfully received the N-CREATE request.

Warning statuses shall not be returned.

Any other status (i.e. a failure status) conveys that the SCP is not processing the media creation request.

Notes: 1. It is not specified by the Standard what checks the SCP shall accomplish after the N-CREATE request primitive reception and before returning the N-CREATE response. Implementations are discouraged from performing extended validation of the contents of the N-CREATE request, such as availability of the referenced Composite SOP Instances, support for the requested profiles, etc. In case of N-CREATE failure, the SCU would not be able to perform an N-GET to determine the detailed reasons for failure, and allow operators to apply suitable correction actions to make the request processable (e.g. resending any missing Composite SOP Instances). Such checks are better deferred until after receipt of the N-ACTION request, after which an N-GET may be performed.

2. The Standard does not require the SCP to queue multiple requests, though implementations are encouraged to do so. As a consequence, a new request before a previous request has been completed may fail immediately, or may return a successful response and be queued. The size of any such queue is beyond the scope of the Standard.

3. How long the instance of the Media Creation Management SOP Class persists once the Execution Status (2100,0020) has been set to IDLE is beyond the scope of the Standard.

The N-CREATE implicitly creates the Execution Status (2100,0020) and Execution Status Info (2100,0030) Attributes, which may subsequently be retrieved by an N-GET.

S.3.2.1.4 Status Codes.

The status values which are specific for this action are defined in Table S.3.2.2.4-1. See PS 3.7 for general response status codes.

Provided by IHS
No reproduction or networking permitted without license from IHS Not for Resale

Table S.3.2.2.4-1
SOP CLASS STATUS VALUES

Status	Meaning	Code
Failure	Refused because an Initiate Media Creation action has already been received for this SOP Instance.	A510

S.3.2.2 Initiate Media Creation

The Initiate Media Creation operation allows an SCU to request an SCP to create Interchange Media according to an already created Media Creation Management SOP Instance. An SCP shall use this operation to schedule the creation of Interchange Media. This operation shall be invoked through the N-ACTION primitive.

S.3.2.2.1 Action Information

The DICOM AEs which claim conformance to this SOP Class as an SCU and/or an SCP shall support the Action Types and Action Information as specified in Table S.3.2.2.1-1.

Table S.3.2.2.1-1
MEDIA CREATION REQUEST – ACTION INFORMATION

Action Type Name	Action Type ID	Attribute	Tag	Requirement Type SCU/SCP
Initiate Media Creation	1	Number of Copies	(2000,0010)	3/1
		Request Priority	(2200,0020)	3/3 See Section S.3.2.2.1.1

S.3.2.2.1.1 Priority

The Request Priority (2200,0020), if present, may be used by the SCP to prioritize a higher priority request over other pending lower priority requests.

S.3.2.2.2 Service Class User Behavior

The SCU shall use the N-ACTION primitive to request the SCP to create Interchange Media according to an already created Media Creation Management SOP Instance. Action Information is specified in Table S. 3.2.2.1-1.

Upon receipt of a successful N-ACTION Response Status Code from the SCP, the SCU now knows that the SCP has received the N-ACTION Initiate Media Creation request and will process the request.

Upon receipt of a failure N-ACTION Response Status Code from the SCP, the SCU now knows that the SCP will not process the Initiate Media Creation request. The actions taken by the SCU upon receiving the status is beyond the scope of this Standard.

At any time after receipt of the N-ACTION-Response, the SCU may release the association on which it sent the N-ACTION-Request.

Notes: 1. An N-GET of the corresponding of the Media Creation Management SOP Class may be performed on the same or subsequent associations.

2. The duration for which the SOP Instance UID of an instance of the Media Creation Management SOP Class remains active once the request has been completed or has failed is implementation dependent, but should be sufficiently long to allow an SCU to determine the ultimate outcome of the request.

Provided by IHS
No reproduction or networking permitted without license from IHS
Not for Resale

S.3.2.2.3 Service Class Provider Behavior

Upon receipt of the N-ACTION Initiate Media Creation request, the SCP shall return, via the N-ACTION response primitive, the N-ACTION Response Status Code applicable to the associated request. A success status conveys that the SCP has successfully scheduled the request.

Notes: 1. The extent of validation of the contents of the request, the availability of the referenced Composite SOP Instances, support for the requested profiles and other checks that may determine the ultimate success or failure of the request are not specified by the Standard. In particular, a request may be immediately accepted successfully, but subsequently fail for some reason, or the N-ACTION response primitive may contain a status that reflects a more thorough (and prolonged) check.

2. How long any Composite Instances that have been transferred via the Storage Service Class to the SCP for the purpose of a Media Creation Request persist, is beyond the scope of the Standard. The Preserve Composite Instances After Media Creation (2200,000A) flag is provided as a hint only. Even if this flag is set, a subsequent request referencing some or all of the same instances may fail if the SCP had reason to flush its cache of instances in the interim, and the SCU may need to be prepared to re-send them.

3. How long the instance of the Media Creation Management SOP Class persists once the Execution Status (2100,0020) has been set to DONE or FAILED is beyond the scope of the Standard.

The N-ACTION implicitly creates or updates the Execution Status (2100,0020), Execution Status Info (2100,0030), Total Number of Pieces of Media Created (2200,000B), Failed SOP Sequence (0008,1198) and Referenced Storage Media Sequence (2200,000D) Attributes, which may subsequently be retrieved by an N-GET.

S.3.2.2.4 Status Codes

There are no specific status codes. See PS 3.7 for response status codes.

S.3.2.3 Cancel Media Creation

The Cancel Media Creation operation allows an SCU to request an SCP to cancel a media creation request, whether or not it has begun to be processed. This operation shall be invoked through the N-ACTION primitive.

S.3.2.3.1 Action Information

The DICOM AEs that claim conformance to this SOP Class as an SCU and/or an SCP shall support the Action Types and Action Information as specified in Table S.3.2.3.1-1.

Table S.3.2.3.1-1
MEDIA CREATION REQUEST – ACTION INFORMATION

Action Type Name	Action Type ID	Attribute	Tag	Requirement Type SCU/SCP
Cancel Media Creation	2			

S.3.2.3.2 Service Class User Behavior

The SCU shall use the N-ACTION primitive to request the SCP to cancel the media creation request corresponding to the Affected SOP Instance UID in the N-ACTION request primitive, whether or not it has been initiated with an N-ACTION Initiate Media Creation request, and whether or not it has begun to be processed (i.e. is pending or in progress).

Upon receipt of a successful N-ACTION Response Status Code from the SCP, the SCU knows that the SCP has received the N-ACTION Cancel Media Creation request, has cancelled any

Provided by IHS
No reproduction or networking permitted without license from IHS
Not for Resale

pending or in progress media creation, and deleted the Media Creation Management SOP Instance.

Note: Successful cancellation implies that a subsequent N-GET of the corresponding Media Creation Management SOP Instance would fail.

Upon receipt of a failure N-ACTION Response Status Code from the SCP, the SCU knows that the SCP will not process the Cancel Media Creation request. The actions taken by the SCU upon receiving the status is beyond the scope of this Standard.

Note: Cancellation failure implies that media creation has already completed (successfully or not), or will proceed. The status of the media creation request may still be obtained with an N-GET, unless the reason for failure was that the SOP Instance did not exist.

S.3.2.3.3 Service Class Provider Behavior

Upon receipt of the N-ACTION Cancel Media Creation request, the SCP shall return, via the N-ACTION response primitive, the N-ACTION Response Status Code applicable to the associated request. A success status conveys that the SCP has successfully cancelled the request.

A failure status conveys that the SCP has failed to cancel the request, in which case the Execution Status (2100,0020), Execution Status Info (2100,0030), Total Number of Pieces of Media Created (2200,000B), Failed SOP Sequence (0008,1198) and Referenced Storage Media Sequence (2200,000D) Attributes may subsequently be retrieved by an N-GET.

S.3.2.3.4 Status Codes

The status values that are specific for this SOP Class and DIMSE Service are defined in Table S.3.2.3.4-1.See PS 3.7 for general response status codes.

Table S.3.2.3.4-1
RESPONSE STATUSES

Service Status	Further Meaning	Response Status Codes
Failure	Media creation request already completed.	C201H
	Media creation request already in progress and cannot be interrupted.	C202H
	Cancellation denied for unspecified reason.	C203H

S.3.2.4 Get Media Creation Result

The Get Media Creation Result operation allows an SCU to request of an SCP the status of a media creation request. This operation shall be invoked through the N-GET primitive used in conjunction with the appropriate Media Creation Management SOP Instance corresponding to the creation request.

S.3.2.4.1 Attributes

The Application Entity which claims conformance to this SOP Class as an SCU may choose to interpret the Attributes maintained by the SCP which the SCU receives via the operations of the SOP Class. The Application Entity that claims conformance as an SCP to this SOP Class shall support the Attributes specified in Table S.3.2.4.1-1.

Provided by IHS
No reproduction or networking permitted without license from IHS Not for Resale

Table S.3.2.4.1-1
MEDIA CREATION MANAGEMENT SOP CLASS N-GET ATTRIBUTES

Attribute Name	Tag	Requirement Type (SCU/SCP)
Specific Character Set	(0008,0005)	3/1C (Required if expanded or replacement character set is used)
Execution Status	(2100,0020)	3/1
Execution Status Info	(2100,0030)	3/1
Total Number of Pieces of Media Created	(2200,000B)	3/1
Failed SOP Sequence	(0008,1198)	3/2
Referenced Storage Media Sequence	(2200,000D)	3/2
All Other Attributes of the Media Creation Management Module		3/3

S.3.2.4.2 Service Class User

The SCU shall specify in the N-GET request primitive the UID of the Media Creation Management SOP Instance for which Attribute Values are to be returned. The SCU shall be permitted to request that Attribute Values be returned for any Media Creation Management SOP Class Attribute specified in Section S.3.2.1.1. Additionally, values may be requested for optional Media Creation Management Module Attributes.

The SCU shall specify the list of Media Creation Management SOP Class Attributes for which the Attribute Values are to be returned. The encoding rules for this list are specified in the N-GET request primitive specified in PS 3.7.

In an N-GET operation, Sequence Attributes can only be requested in their entirety, and only the top level Sequence Attribute can be included in the request.

The SCU shall be capable of receiving all requested Attribute Values provided by the SCP in response to the N-GET indication primitive. The SCU may request Attribute values for optional Attributes that are not maintained by the SCP. In such a case the SCU shall function properly regardless of whether the SCP returns values for those Attributes or not. This Service Class Specification places no requirements on what the SCU shall do as a result of receiving this information.

Note: In order to interpret accurately the character set used for Attribute values returned, it is recommended that the Attribute value for Specific Character Set (0008,0005) be requested in the N-GET request primitive.

S.3.2.4.3 Service Class Provider

This operation allows the SCU to request from the SCP, selected Attribute Values for a specific Media Creation Management SOP Instance. This operation shall be invoked through the use of the DIMSE N-GET Service used in conjunction with the appropriate Media Creation Management SOP Instance.

The SCP shall return, via the N-GET response primitive, the N-GET Response Status Code applicable to the associated request. Contingent on the N-GET Response Status, the SCP shall return, via the N-GET Response Primitive, Attribute Values for all requested Attributes maintained

--`,,```,,,,````-`-`,,`,,`,`,,`---

Provided by IHS
No reproduction or networking permitted without license from IHS Not for Resale

by the SCP (see Table S.3.2.4.1-1). The SCP shall not return Data Elements for optional Attributes that are not maintained by the SCP.

The SCP shall return the entire content of a Sequence if a Sequence Attribute is requested.

S.3.2.4.4 Status Codes

The status values that are specific for this SOP Class and DIMSE Service are defined in Table S.3.2.4.4-1.

See PS 3.7 for response status codes.

Table S.3.2.4.4-1
RESPONSE STATUSES

Service Status	Further Meaning	Response Status Codes
Warning	Requested optional Attributes are not supported	0001

S.3.3 Media Creation Management SOP Class UID

The Media Creation Management SOP Class shall be uniquely identified by the Media Creation Management SOP Class UID, which shall have the value “1.2.840.10008.5.1.1.33”.

S.4 CONFORMANCE REQUIREMENTS

Implementations claiming Standard SOP Class Conformance to the Media Creation Management SOP Class shall be conformant as described in this Section and shall include within their Conformance Statement information as described in this Section and sub-Sections.

An implementation may claim conformance to this SOP Class as an SCU, SCP or both. The Conformance Statement shall be in the format defined in PS 3.2.

S.4.1 SCU Conformance

An implementation that is conformant to this SOP Class as an SCU shall meet conformance requirements for

- the operations and actions which it invokes

The mechanisms used by the SCU to transfer SOP Instances to the SCP using the Storage Service Class prior to initiating a request operation shall also be documented, and in particular the Transfer Syntaxes that may be proposed.

S.4.1.1 Operations

The SCU shall document in the Conformance Statement the actions and behavior which cause the SCU to generate an N-CREATE primitive (Create Media Creation Request), an N-ACTION primitive (Initiate Media Creation and Cancel Media Creation) or an N-GET primitive (Get Media Creation Result).

The SCU shall specify the SOP Class UIDs for which it may request media creation.

The SCU shall specify the Media Application Profiles for which it may request media creation.

The SCU shall specify if it supports the optional Storage Media File-Set ID & UID Attributes in the N-CREATE.

Provided by IHS
No reproduction or networking permitted without license from IHS Not for Resale

The SCU shall specify if it supports the optional Icon Image Sequence Attributes in the N-CREATE.

The SCU shall describe its use of expanded or replacement character sets, both in the N-CREATE, the N-GET and in its use of the Storage Service Class for composite instances.

The SCU shall specify whether or not it retries failed requests.

Note: This allows the reader of a Conformance Statement to determine whether or not human intervention will be needed in the event of transient failures, or whether the SCU may be able to recover automatically.

The Conformance Statement shall be formatted as defined in PS 3.2

S.4.2 SCP Conformance

An implementation that is conformant to this SOP Class as an SCP shall meet conformance requirements for

- the operations and actions which it performs

The Storage Service Class mechanisms accepted by the SCP prior to receiving a request operation shall also be documented, and in particular the Transfer Syntaxes that may be accepted.

S.4.2.1 Operations

The SCP shall document in the Conformance Statement the behavior and actions of the SCP upon receiving the N-CREATE primitive (Create Media Creation Request), N-ACTION primitive (Initiate Media Creation and Cancel Media Creation) or the N-GET primitive (Get Media Creation Result) .

The SCP shall specify the SOP Class UIDs for which it will accept media creation requests.

The SCP shall specify the Media Application Profiles for which it will accept media creation requests, and what default profiles it will use in the event that they are not specified by the SCU.

Note: The forms of media that can be created are implicit in the list of Media Application Profiles supported, each of which is media-specific.

The SCP shall specify whether or not it supports creation of optional Icon Image Sequence Attributes in the DICOMDIR if none are supplied by the SCU.

The SCP shall specify the manner of use of label information, and in particular which:

- attributes are extracted from the Composite Instances when so instructed
- barcode symbologies – if any – are supported

The SCP shall describe its use of expanded or replacement character sets, both in the N-CREATE, the N-GET and in its extraction of information from the Composite Instances for incorporation in the DICOMDIR and on the media label. The SCP shall describe its use of the attributes both in the N-CREATE, and N-ACTION and the Composite Instances to create the media label.

The SCP shall specify if and how it supports the following optional Attributes in the N-CREATE and N-ACTION :

- Storage Media File-Set ID (0088,0130) & Storage Media File-Set UID (0088,0140)

Provided by IHS
No reproduction or networking permitted without license from IHS
Not for Resale

- Media Disposition (2200,0004)
- Priority (2000,0020)
- Preserve Composite Instances After Media Creation (2200,000A)

The SCP shall specify the duration of persistence of received Composite Instances after a request has been processed successfully or unsuccessfully.

The SCP shall specify how long it will maintain:

- the result of the creation of media after the request has succeeded or failed
- the Media Creation Management Instances whose status is IDLE.

The SCP shall specify the action taken when a permanent failure (e.g., a media writing failure) or a transient failure (e.g., no empty media available) occurs, and their relationship with the media creation request status transaction.

Note: For example, how many times the SCP will retry writing a new piece of media before setting the Execution Status (2100,0020) to FAILURE, how many media creation requests the SCP is able to queue, the SCP behavior when the request queue, if any, is full.

The SCP shall specify if it is able to split a media creation request over more than one piece of media, if the file-set doesn't fit on one.

The SCP shall specify if it is able to add to the created media Non-DICOM objects (e.g., html files, JPEG images), how these objects are organized, and how it interprets the Include Non-DICOM Objects (2200,0008) Attribute.

The SCP shall specify if it is able to add to the created media DICOM display applications, and how it interprets the Include Display Application (2200,0009) Attribute.

The Conformance Statement shall be formatted as defined in PS 3.2.

Provided by IHS
No reproduction or networking permitted without license from IHS
Not for Resale

Annex T HANGING PROTOCOL STORAGE SERVICE CLASS

T.1 OVERVIEW

T.1.1 Scope

The Hanging Protocol Storage Service Class defines an application-level class-of-service that allows one DICOM AE to send a Hanging Protocol SOP Instance to another DICOM AE.

T.1.2 Service Definition

The Hanging Protocol Storage Service Class consists of a single SOP Class: the Hanging Protocol Storage SOP Class. It uses the Hanging Protocol IOD that represents the Hanging Protocol IE. This IOD is is defined in PS 3.3. The Hanging Protocol Storage Service Class uses the C-STORE DIMSE Service specified in PS 3.7. A successful completion of the C-STORE has the following semantics:

- Both the SCU and the SCP support Hanging Protocol information.
- The Hanging Protocol information is stored in some medium.
- For some time frame, the Hanging Protocol information may be accessed.

Notes: 1. Support for the Hanging Protocol Storage SOP Class does not imply support for the Hanging Protocol Query/Retrieve Service Class.

2. The duration of the storage is also implementation dependent, but is described in the Conformance Statement of the SCP.

3. The Hanging Protocol Storage SOP Class is intended to be used in a variety of environments: e.g., for workstations to transfer Hanging Protocol SOP Instances to other workstations or archives, for archives to transfer Hanging Protocol SOP Instances to workstations, etc.

T.2 ASSOCIATON NEGOTIATION

The Association negotiation rules as defined in PS 3.7 apply to the SOP Class of this Service Class. No SOP Class specific application information is used.

T.3 CONFORMANCE OVERVIEW

The application-level services addressed by this Service Class definition are specified in a single SOP Class: Hanging Protocol Storage SOP Class.

T.4 HANGING PROTOCOL STORAGE SOP CLASS

This Section defines the SCU and SCP behavior for the Hanging Protocol Storage SOP Class. The C-STORE DIMSE-C Service shall be the mechanism used to transfer Hanging Protocol SOP Instances between peer DICOM AEs as described in PS 3.7.

T.4.1 Service Class User

The DICOM AE that claims conformance to this SOP Class as an SCU shall be capable of sending a Hanging Protocol SOP Instance that meets the requirements of the Hanging Protocol IOD. It shall be invoked by the SCU through the use of the DIMSE C-STORE request used in conjunction with this SOP Class.

The SCU shall include a Data Set with the Attributes as defined in the Hanging Protocol IOD in PS 3.3.

--`,,```,,,,````-`-`,,`,,`,`,,`---

Provided by IHS
No reproduction or networking permitted without license from IHS Not for Resale

The SCU shall recognize the status of the C-STORE service and take appropriate action based on the success or failure of the service. This SOP Class places no further requirements on what the SCU shall do other than that it shall distinguish between successful and failed C-STORE responses. This behavior shall be documented as part of the SOP Class Conformance Statement.

T.4.2 Service Class Provider

The DICOM AE that claims conformance to this SOP Class as an SCP shall receive a Hanging Protocol SOP Instance through the use of the DIMSE C-STORE service used in conjunction with this SOP Class.

The SCP shall store and provide access to all Type 1, Type 2, and Type 3 Attributes defined in the Hanging Protocol IOD, as well as any Standard Extended Attributes (including Private Attributes) included in the SOP Instance. The SCP may, but is not required to validate that the Attributes of the Hanging Protocol SOP Instance meet the requirements of the Hanging Protocol IOD. The SCP shall not modify the values of any Attributes in the Hanging Protocol SOP Instance without assigning a new SOP Instance UID.

If a display device acting as an SCP applies a Hanging Protocol to a set of images, all mandatory Hanging Protocol and presentation intent attributes shall be applied.

The SCP shall return, via the C-STORE response primitive, the Response Status Code applicable to the associated request. By performing this service successfully, the SCP indicates that the Hanging Protocol SOP Instance has been successfully stored. Table T.4-1 shows the response status values. General status code values and fields related to status code values are defined in PS 3.7.

Table T.4-1
C-STORE RESPONSE STATUS VALUES

Service Status	Further Meaning	Status Codes	Related Fields
Failure	Refused: Out of Resources	A700	(0000,0902)
	Error: Data Set Does Not Match SOP Class	A900	(0000,0901) (0000,0902)
	Error: Cannot Understand	C000	(0000,0901) (0000,0902)
Success		0000	None

Note: Status Codes are returned in DIMSE response messages (See PS 3.7). The code values stated in column "Status Codes" are returned in Status Command Element (0000,0900).

T.4.3 Hanging Protocol Storage SOP Class UID

The Hanging Protocol Storage SOP Class shall be uniquely identified by the Hanging Protocol Storage SOP Class UID, which shall have a value “1.2.840.10008.5.1.4.38.1”.

T.4.4 Conformance Statement Requirements

An implementation may conform to the Hanging Protocol Storage SOP Class as an SCU, SCP or both. The Conformance Statement shall be in the format defined in PS 3.2.

T.4.4.1 SCU Conformance Requirements

An implementation that conforms to the Hanging Protocol Storage SOP Class as an SCU that is a creator of Hanging Protocol SOP Instances shall state in its Conformance Statement:

- The manner in which the values of the Hanging Protocol IOD Attributes are derived from displayed images, layouts, operator intervention or defaults.

--`,,```,,,,````-`-`,,`,,`,`,,`---

Provided by IHS
No reproduction or networking permitted without license from IHS Not for Resale

- Any Private Attributes that are used as the value of Selector Attribute (0072,0026) in the Image Set Selector Sequence, Filter Operations Sequence or Sorting Operations Sequence.

- The optional Attributes that may be included in a Hanging Protocol SOP Instance.

- The behavior of the SCU in the case of a successful C-STORE response status.

- The behavior of the SCU in each case of a failure C-STORE response status.

T.4.4.2 SCP Conformance Requirements

An implementation that conforms to the Hanging Protocol Storage SOP Class as an SCP that interprets Hanging Protocol SOP Instances for display shall state in its Conformance Statement:

- The range of display environments that the SCP will support (e.g., number of screens, size of screens, overlapping image boxes).

- The optional Attributes of the Hanging Protocol IOD that it is capable of interpreting and those that are not supported.

- Description of application behavior when the value of Partial Data Display Handling (0072,0208) is ADAPT_LAYOUT or zero length.

- Description of application behavior when the display environment of the Hanging Protocol Instance differs from the display environment of the application, with respect to preserving layout versus spatial resolution.

- The Image Storage SOP Classes for which the Hanging Protocol Storage SOP Class is supported

An implementation that conforms to the Hanging Protocol Storage SOP Class as an SCP shall state in its Conformance Statement:

- The behavior of the SCP in the case of a successful C-STORE operation, including the access method for a stored Hanging Protocol SOP Instance, and the duration of the storage.

- The meaning of each case of a failure C-STORE response status, as well as appropriate recovery action.

Provided by IHS
No reproduction or networking permitted without license from IHS
Not for Resale

Annex U HANGING PROTOCOL QUERY/RETRIEVE SERVICE CLASS

U.1 OVERVIEW

U.1.1 Scope

The Hanging Protocol Query/Retrieve Service Class defines an application-level class-of-service that facilitates access to Hanging Protocol composite objects. It provides query and retrieve/transfer capabilities similar to the Basic Worklist Management Service Class and Query/Retrieve Service Class.

U.1.2 Conventions

See Conventions for the Basic Worklist Management Service (K.1.2).

U.1.3 Query/Retrieve Information Model

In order to serve as an SCP of the Hanging Protocol Query/Retrieve Service Class, a DICOM AE possesses information about the Attributes of a number of Hanging Protocol composite SOP Instances. The information is organized into a Hanging Protocol Information Model.

U.1.4 Service Definition

Two peer DICOM AEs implement a SOP Class of the Hanging Protocol Query/Retrieve Service Class with one serving in the SCU role and one serving in the SCP role. SOP Classes of the Hanging Protocol Query/Retrieve Service Class are implemented using the DIMSE-C C-FIND and C-MOVE services as defined in PS 3.7.

The semantics of the C-FIND service are the same as those defined in the Service Definition of the Basic Worklist Management Service Class.

The semantics of the C-MOVE service are the same as those defined in the Service Definition of the Query/Retrieve Service Class, with the exception that there is only one level of retrieval.

U.2 HANGING PROTOCOL INFORMATION MODEL DEFINITION

The Hanging Protocol Information Model is identified by the SOP Class negotiated at Association establishment time. The SOP Class is composed of both an Information Model and a DIMSE-C Service Group.

The Hanging Protocol Information Model is defined, with the Entity-Relationship Model Definition and Key Attributes Definition analogous to those defined in the Worklist Information Model Definition of the Basic Worklist Management Service.

U.3 HANGING PROTOCOL INFORMATION MODEL

The Hanging Protocol Information Model is based upon a one level entity:

— Hanging Protocol object instance

The Hanging Protocol object instance contains Attributes associated with the Hanging Protocol object IE of the Composite IODs as defined in PS 3.3.

U.4 DIMSE-C SERVICE GROUPS

U.4.1 C-FIND Operation

See the C-FIND Operation definition for the Basic Worklist Management Service Class (K.4.1), and substitute “Hanging Protocol” for “Worklist. The “Worklist” Search Method shall be used.

Provided by IHS
No reproduction or networking permitted without license from IHS Not for Resale

The SOP Class UID identifies the Hanging Protocol Information Model against which the C-FIND is to be performed. The Key Attributes and values allowable for the query are defined in the SOP Class definition for the Hanging Protocol Information Model.

U.4.2 C-MOVE Operation

See the C-MOVE Operation definition for the Query/Retrieve Service Class (C.4.2). No Extended Behavior or Relational-Retrieve is defined for the Hanging Protocol Query/Retrieve Service Class.

Query/Retrieve Level (0008,0052) is not relevant to the Hanging Protocol Query/Retrieve Service Class, and therefore shall not be present in the Identifier. The only Unique Key Attribute of the Identifier shall be SOP Instance UID (0008,0018). The SCU shall supply one UID or a list of UIDs.

Note: More than one entity may be retrieved, using List of UID matching.

U.5 ASSOCIATION NEGOTIATION

See the Association Negotation definition for the Basic Worklist Management Service Class (K.5).

U.6 SOP CLASS DEFINITIONS

U.6.1 Hanging Protocol Information Model

U.6.1.1 E/R Model

The Hanging Protocol Information Model consists of a single entity. In response to a given C-FIND request, the SCP shall send one C-FIND response per matching Hanging Protocol Instance.



Figure U.6-1 HANGING PROTOCOL INFORMATION MODEL E/R DIAGRAM

U.6.1.2 Hanging Protocol Attributes

Table U.6-1 defines the Attributes of the Hanging Protocol Information Model:

Table U.6-1
Attributes for the Hanging Protocol Information Model

Description / Module	Tag	Matching Key Type	Return Key Type	Remark / Matching Type
SOP Common				
Specific Character Set	(0008,0005)	-	1C	This attribute is required if expanded or replacement character sets are used. See C.2.2.2 and C.4.1.1.
SOP Class UID	(0008,0016)	R	1	
SOP Instance UID	(0008,0018)	U	1	
Hanging Protocol Definition				
Hanging Protocol Name	(0072,0002)	R	1	This attribute shall be retrieved with

Provided by IHS
No reproduction or networking permitted without license from IHS
Not for Resale

Description / Module	Tag	Matching Key Type	Return Key Type	Remark / Matching Type
				Single Value, Wild Card or Universal matching.
Hanging Protocol Description	(0072,0004)	-	1	
Hanging Protocol Level	(0072,0006)	R	1	This attribute shall be retrieved with Single Value or Universal matching.
Hanging Protocol Creator	(0072,0008)	-	1	
Hanging Protocol Creation Datetime	(0072,000A)	-	1	
Hanging Protocol Definition Sequence	(0072,000C)	R	1	This attribute shall be retrieved with Sequence or Universal matching.
>Modality	(0008,0060)	R	2	This attribute shall be retrieved with Single Value or Universal matching.
>Anatomic Region Sequence	(0008,2218)	R	2	This attribute shall be retrieved with Sequence or Universal matching.
>> Code Value	(0008,0100)	R	1	This attribute shall be retrieved with Single Value or Universal matching.
>> Coding Scheme Designator	(0008,0102)	R	1	This attribute shall be retrieved with Single Value or Universal matching.
>>Coding Scheme Version	(0008,0103)	-	3	
>>Code Meaning	(0008,0104)	-	1	
>Laterality	(0020,0060)	R	2	This attribute shall be retrieved with Single Value or Universal matching.
> Procedure Code Sequence	(0008,1032)	R	2	This attribute shall be retrieved with Sequence or Universal matching.
>> Code Value	(0008,0100)	R	1	This attribute shall be retrieved with Single Value or Universal matching.
>> Coding Scheme Designator	(0008,0102)	R	1	This attribute shall be retrieved with Single Value or Universal matching.
>>Coding Scheme Version	(0008,0103)	-	3	
>>Code Meaning	(0008,0104)	-	1	
>Reason for Requested Procedure Code Sequence	(0040,100A)	R	2	This attribute shall be retrieved with Sequence or Universal matching.
>> Code Value	(0008,0100)	R	1	This attribute shall be retrieved with Single Value or Universal matching.
>> Coding Scheme Designator	(0008,0102)	R	1	This attribute shall be retrieved with Single Value or Universal matching.
>>Coding Scheme Version	(0008,0103)	-	3	
>>Code Meaning	(0008,0104)	-	1	

Provided by IHS
No reproduction or networking permitted without license from IHS
Not for Resale

Description / Module	Tag	Match-ing Key Type	Return Key Type	Remark / Matching Type
Number of Priors Referenced	(0072,0014)	R	1	This attribute shall be retrieved with Single Value or Universal matching.
Hanging Protocol User Identification Code Sequence	(0072,000E)	R	2	This attribute shall be retrieved with Sequence or Universal matching.
>Code Value	(0008,0100)	R	1	This attribute shall be retrieved with Single Value or Universal matching.
>Coding Scheme Designator	(0008,0102)	R	1	This attribute shall be retrieved with Single Value or Universal matching.
>Coding Scheme Version	(0008,0103)	-	3	
>Code Meaning	(0008,0104)	-	1	
Hanging Protocol User Group Name	(0072,0010)	R	3	
Hanging Protocol Environment				
Number of Screens	(0072,0100)	R	2	
Nominal Screen Definition Sequence	(0072,0102)	-	2	
>Number of Vertical Pixels	(0072,0104)	-	1	
>Number of Horizontal Pixels	(0072,0106)	-	1	
>Display Environment Spatial Position	(0072,0108)	-	1	
>Screen Minimum Grayscale Bit Depth	(0072,010A)	-	1C	Required if Screen Minimum Color Bit Depth (0072,010C) is not present.
>Screen Minimum Color Bit Depth	(0072,010C)	-	1C	Required if Screen Minimum Grayscale Bit Depth (0072,010A) is not present.
>Application Maximum Repaint Time	(0072,010E)	-	3	

U.6.1.3 Conformance Requirements

An implementation may conform to one of the Hanging Protocol Information Model SOP Classes as an SCU, SCP or both. The Conformance Statement shall be in the format defined in PS 3.2.

U.6.1.3.1 SCU Conformance

U.6.1.3.1.1 C-FIND SCU Conformance

An implementation that conforms to one of the Hanging Protocol Information Model SOP Classes shall support queries against the Hanging Protocol Information Model using the C-FIND SCU Behavior described for the Basic Worklist Management Service Class (see K.4.1.2 and U.4.1).

An implementation that conforms to one of the Hanging Protocol Information Model SOP Classes as an SCU shall state in its Conformance Statement whether it requests Type 3 Return Key Attributes, and shall list these Optional Return Key Attributes.

Provided by IHS
No reproduction or networking permitted without license from IHS
Not for Resale

An implementation that conforms to one of the Hanging Protocol Information Model SOP Classes as an SCU shall state in its Conformance Statement how it makes use of Specific Character Set (0008,0005) when encoding queries and interpreting responses.

U.6.1.3.1.2 C-MOVE SCU Conformance

An implementation that conforms to one of the Hanging Protocol Information Model SOP Classes as an SCU shall support transfers against the Hanging Protocol Information Model using the C-MOVE SCU baseline behavior described for the Query/Retrieve Service Class (see C.4.2.2.1 and U.4.2).

U.6.1.3.2 SCP Conformance

U.6.1.3.2.1 C-FIND SCP Conformance

An implementation that conforms to one of the Hanging Protocol Information Model SOP Classes as an SCP shall support queries against the Hanging Protocol Information Model using the C-FIND SCP Behavior described for the Basic Worklist Management Service Class (see K.4.1.3).

An implementation that conforms to one of the Hanging Protocol Information Model SOP Classes as an SCP shall state in its Conformance Statement whether it supports Type 3 Return Key Attributes, and shall list these Optional Return Key Attributes.

An implementation that conforms to one of the Hanging Protocol Information Model SOP Classes as an SCP shall state in its Conformance Statement how it makes use of Specific Character Set (0008,0005) when interpreting queries, performing matching and encoding responses.

U.6.1.3.2.2 C-MOVE SCP Conformance

An implementation that conforms to one of the Hanging Protocol Information Model SOP Classes as an SCP shall support transfers against the Hanging Protocol Information Model using the C-MOVE SCP baseline behavior described for the Query/Retrieve Service Class (see C.4.2.3.1).

An implementation that conforms to one of the Hanging Protocol Information Model SOP Classes as an SCP, which generates transfers using the C-MOVE operation, shall state in its Conformance Statement the Hanging Protocol Storage Service Class SOP Class under which it shall support the C-STORE sub-operations generated by the C-MOVE.

U.6.1.4 SOP Classes

The SOP Classes of the Hanging Protocol Information Model in the Hanging Protocol Query/Retrieve Service Class identify the Hanging Protocol Information Model, and the DIMSE-C operations supported. The following Standard SOP Classes are identified:

SOP Class Name	SOP Class UID
Hanging Protocol Information Model - FIND	1.2.840.10008.5.1.4.38.2
Hanging Protocol Information Model - MOVE	1.2.840.10008.5.1.4.38.3

Provided by IHS
No reproduction or networking permitted without license from IHS
Not for Resale

Annex T INDEX TO ATTRIBUTE TAGS AND UIDs (Informative)

(0000,0002)....17
(0000,0900)....269, 326, 357
(0000,0901)....24, 48, 53, 58, 269, 325, 357
(0000,0902)....24, 48, 53, 58, 269, 325, 357
(0000,1000)....17, 119, 150
(0000,1001)....17
(0000,1020)....53, 58, 59
(0000,1021)....53, 58, 59
(0000,1022)....53, 58, 59
(0000,1023)....53, 58, 59
(0008,0005)41, 46, 52, 53, 58, 75, 76, 80, 91, 92, 94, 96, 97, 98, 99, 100, 116, 117, 118, 120, 124, 125, 126, 128, 130, 134, 144, 147, 156, 165, 169, 175, 176, 177, 180, 181, 182, 200, 267, 268, 269, 274, 279, 280, 283, 290, 291, 320, 325, 329, 330, 339, 344, 352, 360, 363
94, 99, 119, 178, 183
94, 99, 120, 178, 183
94, 99, 120, 178, 183
(0008,0016)....17, 73, 74, 283, 360
(0008,0018)....17, 52, 55, 57, 58, 61, 73, 74, 283, 360
(0008,001A)....73
(0008,001B)....29
(0008,0020)....78, 118, 121, 200, 346
124, 126, 129
(0008,0030)....78, 118, 121, 200
124, 127, 129
(0008,0050)....78, 116, 135, 144, 156, 166, 201, 277, 288
(0008,0052)....46, 52, 58, 68, 69, 76, 77, 81, 360
(0008,0054)....47, 87, 124, 125, 127, 129, 138, 146, 161, 168, 226, 256, 257, 258, 261, 286, 340
(0008,0056)....47, 340, 341
(0008,0058)....53, 58
(0008,0060)....72, 124, 128, 137, 146, 274, 361
(0008,0061)....78
(0008,0068)....34, 35
(0008,0070)....222, 232
(0008,0090)....78, 96, 100, 200, 277
(0008,0100)....73, 78, 120, 124, 126, 128, 135, 136, 137, 144, 145, 146, 147, 152, 156, 158, 159, 160, 161, 162, 166, 167, 168, 184, 275, 276, 278, 279, 284, 285, 286, 287, 288, 289, 328, 339, 361, 362
(0008,0102)....73, 78, 120, 121, 124, 126, 128, 135, 136, 137, 144, 145, 146, 147, 152, 157, 158, 159, 160, 161, 162, 166, 167, 168, 184, 275, 276, 278, 279, 284, 285, 286, 287, 288, 289, 328, 339, 361, 362
(0008,0103)....73, 157, 158, 159, 160, 161, 162, 166, 167, 168, 275, 276, 328, 361, 362
(0008,0104)....73, 78, 121, 124, 126, 128, 135, 136, 137, 144, 145, 146, 147, 153, 157, 158, 159, 160, 162, 166, 167, 168, 184, 275, 276, 278, 279, 284, 285, 286, 287, 288, 289, 328, 339, 361, 362
(0008,0105)....73, 324, 329
(0008,1030)....78, 124, 126, 128, 201
(0008,1032)....78, 124, 126, 128, 136, 145, 361
(0008,103E)....138, 146
(0008,1050)....137, 146
(0008,1060)....78, 201
(0008,1070)....138, 146
(0008,1080)....78, 201
(0008,1090)....222, 232
116, 180, 183
(0008,1110)....78, 92, 96, 124, 125, 128, 135, 144, 156, 166, 175, 178, 277, 279, 288, 289
105, 116, 121, 254, 286, 339
124, 125, 126, 127, 129, 160, 168, 286, 329, 340
(0008,1120)....70, 78, 96, 99, 100, 116, 119, 120, 136, 145, 277
92, 116, 120

Provided by IHS
No reproduction or networking permitted without license from IHS
Not for Resale

124, 127, 129, 138, 141, 146
(0008,114A) 329
(0008,1150) 71, 73, 78, 92, 96, 99, 100, 101, 105, 116, 119, 120, 121, 124, 127, 128, 129, 135, 136, 138, 144, 145, 146, 156, 157, 161, 166, 168, 175, 176, 178, 180, 183, 203, 205, 206, 208, 209, 212, 215, 226, 228, 254, 256, 257, 258, 277, 279, 280, 286, 287, 288, 289, 290, 300, 329, 339, 340, 344
(0008,1155) 71, 73, 78, 92, 96, 99, 100, 101, 116, 117, 120, 121, 124, 125, 127, 128, 129, 135, 136, 138, 144, 145, 146, 156, 157, 161, 166, 168, 175, 176, 178, 180, 183, 203, 205, 206, 208, 209, 212, 215, 226, 228, 254, 256, 257, 277, 279, 280, 286, 287, 288, 289, 290, 300, 329, 339, 340, 344
(0008,115A) 231
212, 215
(0008,1195) 152, 153, 163, 254, 255, 256, 257, 258
(0008,1197) 257
(0008,1198) 257, 350, 351, 352
(0008,1199) 161, 168, 254, 255, 256, 257, 258, 286, 287, 340, 344
(0008,1200) 329
(0008,2218) 361
(0008,3001) 45, 73, 74
(0010,0010) 42, 43, 70, 78, 92, 94, 135, 145, 157, 166, 200, 278, 289, 328, 346
(0010,0020) 29, 52, 58, 70, 75, 78, 92, 94, 135, 145, 157, 166, 200, 212, 215, 226, 278, 289, 320, 322, 328, 346
(0010,0021) 72, 78, 135, 157, 328
(0010,0030) 71, 78, 92, 94, 136, 158, 166, 200, 278, 289, 328
(0010,0032) 71, 78, 145, 200
(0010,0040) 71, 78, 92, 94, 136, 145, 158, 166, 200, 278, 289, 328
(0010,0101) 278
(0010,0102) 278
(0010,1000) 71, 78, 200
(0010,1001) 71, 78, 200
(0010,1010) 78, 201
(0010,1020) 78, 201
(0010,1030) 78, 201, 278
(0010,2000) 279
(0010,2110) 279
(0010,2160) 71, 78, 200
(0010,2180) 78, 201
(0010,21B0) 78, 201
(0010,21C0) 279
(0010,4000) 71, 78, 200
(0018,1201) 222
(0018,1000) 222
(0018,1020) 222
(0018,1030) 138, 146
(0018,1200) 222
(0020,0009) 72
(0020,000D) 29, 52, 55, 57, 58, 61, 78, 119, 125, 134, 144, 156, 160, 165, 168, 200, 212, 215, 226, 277, 286, 287, 288, 317, 320, 321, 322, 340
(0020,000E) 29, 52, 55, 57, 58, 61, 72, 73, 74, 124, 127, 129, 138, 146, 161, 168, 212, 215, 226, 286, 317, 329, 340
(0020,0010) 78, 117, 124, 126, 128, 137, 146, 201, 320, 321, 346
(0020,0011) 72, 201
(0020,0013) 73, 212, 215
(0020,0019) 231
73
73
73
(0020,0060) 361
73
(0020,0200) 320, 321
(0020,1070) 79
(0020,1200) 45, 71, 79
(0020,1202) 45, 71, 79
(0020,1204) 45, 71, 79
(0020,1206) 45, 79
(0020,1208) 45, 79

Provided by IHS
No reproduction or networking permitted without license from IHS
Not for Resale

(0020,1209).....45
(0028,0002).....211, 214
(0028,0004).....13, 211, 214, 223, 306, 309
(0028,0006).....214
(0028,0010).....211, 214, 232
(0028,0011).....211, 215, 232
(0028,0034).....211, 215
(0028,0100).....211, 215
(0028,0101).....211, 215
(0028,0102).....211, 215
(0028,0103).....212, 215
(0028,0120).....308
(0028,1040).....308
(0028,1050).....309
(0028,1051).....309
(0028,1052).....308
(0028,1053).....308
(0028,1056).....309
(0028,2110).....30
(0028,3002).....224
(0028,3003).....224
(0028,3006).....224
118, 120
118, 121
118, 121
121
121
120
120
120
120
(0032,1032).....277, 288
118, 121
118, 121
118, 121
118, 121
124, 126, 128
120, 135, 144, 157, 166, 276, 288
120, 156, 166, 276, 288
(0032,1070).....276
92
98, 99, 100, 101
99, 101, 145, 158, 166, 277
(0038,0011).....145, 158, 166
100
100
100
100
100
100
101
101
(0038,0050).....279
(0038,0100).....269, 279, 289
98, 100, 277
100
(0038,0500).....278
(0040,0281).....139
(0040,0001).....274
(0040,0002).....274
(0040,0003).....274
(0040,0006).....274
(0040,0007).....135, 144, 275
(0040,0008).....135, 144, 275

--`,,```,,,,````-`-`,,`,,`,`,,`---

Provided by IHS
No reproduction or networking permitted without license from IHS
Not for Resale

(0040,0009)..... 135, 144, 276, 284
(0040,0010)..... 275
(0040,0011)..... 275
(0040,0012)..... 276
(0040,0020)..... 276
(0040,0100)..... 274
(0040,0220)..... 138, 141, 146
(0040,0241)..... 136, 145
(0040,0242)..... 136, 145
(0040,0243..... 145
(0040,0243)..... 136, 320, 321
(0040,0244)..... 136, 145, 160, 167
(0040,0245)..... 136, 145, 160, 167
(0040,0250)..... 136, 145, 160, 167
(0040,0251)..... 137, 145, 160, 168
(0040,0252)..... 109, 136, 139, 140, 141, 145, 150, 165
(0040,4002)..... 162, 164
(0040,0253)..... 136, 145, 158, 167
(0040,0254)..... 136, 145, 160, 167
(0040,0255)..... 136, 145
(0040,0260)..... 137, 147
(0040,0270)..... 134, 144
(0040,0280)..... 137, 145, 160, 167
(0040,0281)..... 137, 146
(0040,0340)..... 137, 139, 146
(0040,08EA)..... 276
(0040,1001)..... 135, 144, 157, 166, 276, 288
(0040,1003)..... 277
(0040,1004)..... 277
(0040,100A)..... 361
(0040,2006)..... 139, 147
(0040,2007)..... 139, 147
(0040,2016)..... 135, 144, 157, 166
(0040,2017)..... 135, 144, 157, 166
(0040,3001)..... 278
(0040,4001)..... 111, 152, 153, 154, 155, 163, 284, 295
(0040,4002)..... 113, 160, 163, 164, 165, 167, 170
(0040,4003)..... 284
(0040,4004)..... 284
(0040,4005)..... 285
(0040,4006)..... 287
(0040,4007)..... 159, 167
(0040,4009)..... 152, 158, 166, 285, 287
(0040,4010)..... 284
(0040,4011)..... 285
(0040,4015)..... 163, 287
(0040,4016)..... 157, 163, 166
(0040,4018)..... 284
(0040,4019)..... 160, 167, 338, 339
(0040,4020)..... 111, 284, 295
(0040,4021)..... 286
(0040,4022)..... 286
(0040,4023)..... 157, 163, 166
(0040,4025)..... 284
(0040,4026)..... 285
(0040,4027)..... 285
(0040,4028)..... 158, 167
(0040,4029)..... 159, 167
(0040,4030)..... 159, 167
(0040,4031)..... 161, 168
(0040,4032)..... 162, 168
(0040,4033)..... 160, 164, 168
(0040,4034)..... 285, 295
(0040,4035)..... 152, 158, 166, 287

Provided by IHS
No reproduction or networking permitted without license from IHS
Not for Resale

(0040,4036)..... 153, 158, 166, 285, 287
(0040,4037)..... 153, 158, 166, 285, 287
(0040,A032)..... 321, 323, 328
(0040,A040)..... 275, 276, 328, 330
(0040,A043)..... 73, 74, 275, 328, 330
(0040,A120)..... 275
(0040,A123)..... 275
(0040,A160)..... 275
(0040,A168)..... 275
(0040,A170)..... 73, 74, 279, 286, 287, 289
(0040,A30A)..... 276
(0040,A370)..... 156, 165, 288
(0040,A390)..... 269, 279, 290, 329
(0040,A504)..... 73, 74, 324, 325, 329, 330
(0040,A730)..... 328, 330
(0040,DB00)..... 73, 324, 325, 329
(0040,E001)..... 280, 290, 329
(0040,E010)..... 280, 290, 329
(0042,0010)..... 279, 289
(0072,0002)..... 360
(0072,0004)..... 361
(0072,0006)..... 361
(0072,0008)..... 361
(0072,000A)..... 361
(0072,000C)..... 361
(0072,000E)..... 362
(0072,0010)..... 362
(0072,0014)..... 362
(0072,0026)..... 358
(0072,0100)..... 362
(0072,0102)..... 362
(0072,0104)..... 362
(0072,0106)..... 362
(0072,0108)..... 362
(0072,010A)..... 362
(0072,010C)..... 362
(0072,010E)..... 362
(0072,0208)..... 358
(0088,0056)..... 48
(0088,0130)..... 47, 124, 125, 127, 129, 161, 168, 254, 255, 256, 257, 258, 286, 340, 344, 345, 354
(0088,0140)..... 47, 124, 125, 127, 129, 161, 168, 254, 255, 256, 257, 258, 286, 340, 344, 345, 354
(0088,0200)..... 344, 345
(2000,0010)..... 200, 226, 349
(2000,001E)..... 231
(2000,0020)..... 200, 220, 226, 300, 301, 355
(2000,0030)..... 200, 226, 231, 232, 300
(2000,0040)..... 200, 221, 226, 300
(2000,0050)..... 200, 219, 226, 300
(2000,0060)..... 200, 226
(2000,0061)..... 231
226
227
226
226
226
226
(2000,00A0)..... 231
(2000,00A1)..... 231
(2000,00A2)..... 231
(2000,00A4)..... 232
(2000,00A8)..... 232
(2000,0500)..... 207
226
(2010,0010)..... 199, 205, 207, 211, 214, 232

--`,,```,,,,````-`-`,,`,,`,`,,`---

Provided by IHS
No reproduction or networking permitted without license from IHS
Not for Resale

(2010,0030)..... 199, 206, 217
(2010,0040)..... 206, 232
(2010,0050)..... 206, 231, 232
(2010,0052)..... 232
(2010,0054)..... 232
(2010,0060)..... 206, 208, 212, 213, 214, 215, 216
(2010,0080)..... 206, 208, 212, 213, 214, 215
(2010,00A6)..... 232
(2010,00A7)..... 232
(2010,00A8)..... 232
(2010,00A9)..... 232
(2010,0100)..... 206, 208
(2010,0110)..... 206, 208
(2010,0120)..... 206, 208, 212, 231, 232
(2010,0130)..... 206, 208, 212, 232
(2010,0140)..... 206, 208
(2010,0150)..... 206, 208, 212, 223, 226, 230
(2010,0152)..... 232
(2010,0154)..... 232
(2010,015E)..... 206, 208, 225, 227, 230
(2010,0160)..... 206, 208, 225, 227, 230
(2010,0376)..... 232
(2010,0500)..... 205
(2010,0510)..... 205, 207
(2010,0520)..... 205
(2020,0010)..... 211, 214
(2020,0020)..... 191, 212, 215, 223
(2020,0030)..... 212, 215
(2020,0040)..... 212, 213, 215, 216
(2020,0050)..... 206
(2020,00A0)..... 232
(2020,00A2)..... 232
(2020,0110)..... 211, 213
(2020,0111)..... 214, 216
212, 215
(2030,0010)..... 217
(2030,0020)..... 217
234
234
235
234, 235
234, 235
234, 235
234
(2050,0010)..... 224
(2050,0020)..... 224, 309
(2050,0500)..... 206, 208, 212, 230
203, 209, 219, 300, 301
(2100,0020)..... 220, 243, 244, 300, 348, 350, 351, 352, 355
(2100,0030)..... 219, 220, 300, 348, 350, 351, 352
(2100,0040)..... 220, 300
(2100,0050)..... 220, 300
(2100,0070)..... 220, 300
300
(2100,0160)..... 200, 201, 227, 299, 301
300
(2100,0500)..... 203, 209, 228
(2110,0010)..... 222
(2110,0020)..... 221, 222
(2110,0030)..... 219, 220, 221, 222, 232, 300
300
300
300
201

Provided by IHS
No reproduction or networking permitted without license from IHS
Not for Resale

227
227
200
212, 215
(2200,0001)....344, 346
(2200,0002)....344, 346
(2200,0003)....344, 346
(2200,0004)....344, 346, 355
(2200,0005)....344, 346
(2200,0006)....344, 346
(2200,0007)....344, 346, 347
(2200,0008)....344, 346, 347, 355
(2200,0009)....344, 347, 355
(2200,000A)....344, 350, 355
(2200,000B)....350, 352
(2200,000C)....344, 345
(2200,000D)....350, 352
(2200,000F)....344, 346, 347
(2200,0020)....349
176, 178
176, 178
183
183
183
183
183
183
180
(4008,010C)....79, 183
183
183
183
184
184
184
180
180, 183
180, 182, 183, 184
176
234
234
234
234
234
234
(7FE0,0010)....212, 215
1.2.840.10008.1.1....21, 27
1.2.840.10008.1.20.1....259
1.2.840.10008.1.20.1.1....259
1.2.840.10008.5.1.1.33....353
1.2.840.10008.1.3.10....247
1.2.840.10008.1.40....322
1.2.840.10008.1.40.1....322
87
94, 247
102
101, 247
121, 247
130, 247
1.2.840.10008.3.1.2.3.3....142
1.2.840.10008.3.1.2.3.4....148
1.2.840.10008.3.1.2.3.5....151
177, 247
185

Provided by IHS
No reproduction or networking permitted without license from IHS
Not for Resale

131
1.2.840.10008.5.1.4.32 291
184, 247
1.2.840.10008.5.1.1.1 204
1.2.840.10008.5.1.1.14 220
1.2.840.10008.5.1.1.15 217
1.2.840.10008.5.1.1.16 222
1.2.840.10008.5.1.1.16.376 233
1.2.840.10008.5.1.1.17 222
1.2.840.10008.5.1.1.17.376 233
1.2.840.10008.5.1.1.18 197
1.2.840.10008.5.1.1.2 210
1.2.840.10008.5.1.1.23 225
236
302
302
31, 247
31, 247
31, 247
231
197
1.2.840.10008.5.1.1.4 214
1.2.840.10008.5.1.1.4.1 216
1.2.840.10008.5.1.1.9 196
1.2.840.10008.5.1.4.1.1.1 ..... 31, 247
1.2.840.10008.5.1.4.1.1.1.1 ..... 31, 247
1.2.840.10008.5.1.4.1.1.1.1.1 ..... 31, 247
1.2.840.10008.5.1.4.1.1.1.2 ..... 31, 247
1.2.840.10008.5.1.4.1.1.1.2.1 ..... 31, 247
1.2.840.10008.5.1.4.1.1.1.3 ..... 31, 247
1.2.840.10008.5.1.4.1.1.1.3.1 ..... 31, 247
32, 248
1.2.840.10008.5.1.4.1.1.104.1 ..... 34, 249
32, 248
1.2.840.10008.5.1.4.1.1.11.1 ..... 32, 248
1.2.840.10008.5.1.4.1.1.11.2 ..... 32, 248
1.2.840.10008.5.1.4.1.1.11.3 ..... 32, 248
1.2.840.10008.5.1.4.1.1.11.4 ..... 33, 248
1.2.840.10008.5.1.4.1.1.12.1 ..... 33, 248
1.2.840.10008.5.1.4.1.1.12.1.1 ..... 33, 248
1.2.840.10008.5.1.4.1.1.12.2 ..... 33, 248
1.2.840.10008.5.1.4.1.1.12.2.1 ..... 33, 249
1.2.840.10008.5.1.4.1.1.12.3 ..... 36, 251
1.2.840.10008.5.1.4.1.1.128 ..... 34, 249
34
1.2.840.10008.5.1.4.1.1.2 ..... 31, 247
1.2.840.10008.5.1.4.1.1.2.1 ..... 31, 247
1.2.840.10008.5.1.4.1.1.20 ..... 33, 249
1.2.840.10008.5.1.4.1.1.3 ..... 36, 251
1.2.840.10008.5.1.4.1.1.3.1 ..... 31, 247
1.2.840.10008.5.1.4.1.1.4 ..... 32, 247
1.2.840.10008.5.1.4.1.1.481.1 ..... 34, 249
1.2.840.10008.5.1.4.1.1.481.2 ..... 34, 250
1.2.840.10008.5.1.4.1.1.481.3 ..... 34, 250
1.2.840.10008.5.1.4.1.1.481.4 ..... 34, 250
1.2.840.10008.5.1.4.1.1.481.5 ..... 34, 250
1.2.840.10008.5.1.4.1.1.481.6 ..... 34, 250
1.2.840.10008.5.1.4.1.1.481.7 ..... 34, 250
1.2.840.10008.5.1.4.1.1.481.8 ..... 34, 250
1.2.840.10008.5.1.4.1.1.481.9 ..... 34, 250
1.2.840.10008.5.1.4.1.1.5 ..... 36, 251
1.2.840.10008.5.1.4.1.1.6 ..... 36, 251
1.2.840.10008.5.1.4.1.1.6.1 ..... 32, 247
1.2.840.10008.5.1.4.1.1.66 ..... 33, 249

--`,,```,,,,````-`-`,,`,,`,`,,`---

Provided by IHS
No reproduction or networking permitted without license from IHS
Not for Resale

1.2.840.10008.5.1.4.1.1.66.1 ..... 33, 249
1.2.840.10008.5.1.4.1.1.66.2 ..... 33, 249
1.2.840.10008.5.1.4.1.1.67 ..... 33, 249
1.2.840.10008.5.1.4.1.1.7 ..... 32, 248
1.2.840.10008.5.1.4.1.1.77.1.1 ..... 33, 249
1.2.840.10008.5.1.4.1.1.77.1.1.1 ..... 33, 249
1.2.840.10008.5.1.4.1.1.77.1.2 ..... 33, 249
1.2.840.10008.5.1.4.1.1.77.1.2.1 ..... 33, 249
1.2.840.10008.5.1.4.1.1.77.1.3 ..... 33, 249
1.2.840.10008.5.1.4.1.1.77.1.4 ..... 33, 249
1.2.840.10008.5.1.4.1.1.77.1.4.1 ..... 33, 249
1.2.840.10008.5.1.4.1.1.77.1.5.1 ..... 33, 249
1.2.840.10008.5.1.4.1.1.77.1.5.2 ..... 33, 249
1.2.840.10008.5.1.4.1.1.77.1.5.3 ..... 33, 249
32, 248
1.2.840.10008.5.1.4.1.1.88.11 ..... 33, 249
1.2.840.10008.5.1.4.1.1.88.22 ..... 33, 249
1.2.840.10008.5.1.4.1.1.88.33 ..... 33, 249
1.2.840.10008.5.1.4.1.1.88.40 249
1.2.840.10008.5.1.4.1.1.88.50 ..... 33, 249
1.2.840.10008.5.1.4.1.1.88.59 ..... 33, 249
1.2.840.10008.5.1.4.1.1.88.65 ..... 33, 249
1.2.840.10008.5.1.4.1.1.88.67 ..... 33, 249
32, 248
1.2.840.10008.5.1.4.1.1.9.1.1 ..... 32, 248
1.2.840.10008.5.1.4.1.1.9.1.2 ..... 32, 248
1.2.840.10008.5.1.4.1.1.9.1.3 ..... 32, 248
1.2.840.10008.5.1.4.1.1.9.2.1 ..... 32, 248
1.2.840.10008.5.1.4.1.1.9.3.1 ..... 32, 248
1.2.840.10008.5.1.4.1.1.9.4.1 ..... 32, 248
1.2.840.10008.5.1.4.1.2.1.1 76
1.2.840.10008.5.1.4.1.2.1.2 76
1.2.840.10008.5.1.4.1.2.1.3 76
1.2.840.10008.5.1.4.1.2.2.1 81
1.2.840.10008.5.1.4.1.2.2.2 81
1.2.840.10008.5.1.4.1.2.2.3 81
84
84
84
1.2.840.10008.5.1.4.31 280
1.2.840.10008.5.1.4.32.1 291
1.2.840.10008.5.1.4.32.2 154
1.2.840.10008.5.1.4.32.3 169
1.2.840.10008.5.1.4.33 340
1.2.840.10008.5.1.4.37.1 331
1.2.840.10008.5.1.4.37.2 331
1.2.840.10008.5.1.4.37.3 331
1.2.840.10008.5.1.4.38.1 ..... 250, 357
1.2.840.10008.5.1.4.38.2 363
1.2.840.10008.5.1.4.38.3 363

Provided by IHS
No reproduction or networking permitted without license from IHS
Not for Resale