NEMA PS*3.2 93 ■ 6470247 0505014 T71 ■

NEMA STANDARDS PUBLICATION NO. PS 3.2

nema

Digital Imaging and Communications in Medicine (DICOM)

Part 2: Conformance

NEMA

NATIONAL ELECTRICAL MANUFACTURERS ASSOCIATION ■ 2101 L STREET, N.W., WASHINGTON, D.C. 20037

Provided by IHS
No reproduction or networking permitted without license from IHS
Not for Resale

NEMA PS*3.2 93 ■ 6470247 0505015 908 ■

NEMA Standards Publication PS 3.2-1993

Digital Imaging and Communications in Medicine (DICOM)
Part 2: Conformance

Approved by:
The American College of Radiology

Published by

National Electrical Manufacturers Association
2101 L Street, N.W.
Washington, DC 20037

© 1993 by National Electrical Manufacturers Association

Provided by IHS
No reproduction or networking permitted without license from IHS
Not for Resale

© NEMA PS 3.2-1993

CONTENTS

Page

Foreword 4

Clause

1 Scope and field of application 5
2 Normative references 5
3 Definitions 6
3.1 Reference model definitions 6
3.2 ACSE service definitions 6
3.3 Presentation service definitions 6
3.4 DICOM introduction and pverview definitions 6
3.5 DICOM information object definitions 6
3.6 DICOM service class specification definitions 6
3.7 DICOM data structure and encoding definitions 7
3.8 DICOM message exchange definitions 7
3.9 DICOM upper layer service definitions 7
3.10 DICOM conformance 7
4 Symbols and abbreviations 8
5 Conventions 9
5.1 Application data flow diagram 9
5.1.1 Application entity 9
5.1.2 Real-world activity 9
5.1.3 Local relationships 10
5.1.4 Associations 10
6 Purpose of a conformance statement 11
7 Conformance requirements 13
7.1 Rules governing types of SOP classes 13

Annexes

Annex A (Normative) DICOM conformance statement template 16
A.0 Introduction 16
A.1 Implementation model 16
A.1.1 Application data flow diagram 16
A.1.2 Functional definitions of AE's 16
A.1.3 Sequencing of real-world activities 17
A.2 AE specifications 17
A.2.x AEX specification 17
A.2.x.1 Association establishment policies 18
A.2.x.1.1 General 18
A.2.x.1.2 Number of associations 18
A.2.x.1.3 Asynchronous nature 18
A.2.x.1.4 Implementation identifying information 18
A.2.x.2 Association initiation by real-world activity 18
A.2.x.2.i Real-world activity i 18
A.2.x.2.i.1 Associated real-world activity 18
A.2.x.2.i.2 Proposed presentation contexts 19

Provided by IHS
No reproduction or networking permitted without license from IHS
Not for Resale

A.2.x.2.i.2.j SOP Specific conformance statement for SOP class j 19
A.2.x.3 Association acceptance policy 20
A.2.x.3.i Real-world activity i 20
A.2.x.3.i.1 Associated real-world activity 20
A.2.x.3.i.2 Presentation context table 20
A.2.x.3.i.2.j SOP specific conformance for SOP class j 21
A.2.x.3.i.3 Presentation context acceptance criterion 21
A.2.x.3.i.4 Transfer syntax selection policies 21
A.3 Communication profiles 21
A.3.1 Supported communication stacks (PS 3.8, PS 3.9) 21
A.3.x OSI stack 21
A.3.x.1 International standardized profile (ISP) 21
A.3.x.y API 21
A.3.x.z Physical media support 21
A.3.x TCP/IP stack 22
A.3.x.y API 22
A.3.x.z Physical media support 22
A.3.x Point-to-point stack 22
A.4 Extensions/specializations/privatizations 22
A.4.1 Standard extended/specialized/private SOPs 22
A.4.1.i Standard extended/specialized/private SOP i 22
A.4.2 Private Transfer syntaxes 22
A.4.2.i Private transfer syntax i 22
A.5 Configuration 22
A.5.1 AE Title/presentation address mapping 22
A.5.2 Configurable parameters 23
A.6 Support of extended character sets 23

Annex B (Informative) DICOM conformance statement sample 24
B.0 Introduction 24
B.1 Implementation model 24
B.1.1 Application data flow diagram 24
B.1.2 Functional definitions of AE's 24
B.1.3 Sequencing of real-world activities 25
B.2 AE specifications 25
B.2.1 DIS and DAT - specification 26
B.2.1.1 Association establishment policies 26
B.2.1.1.1 General 26
B.2.1.1.2 Number of associations 26
B.2.1.1.3 Asynchronous nature 26
B.2.1.1.4 Implementation identifying information 27
B.2.1.2 Association initiation policy 27
B.2.1.2.1 Transfer of image encoded with implicit VR 27
B.2.1.2.1.1 Associated real-world activity 27
B.2.1.2.1.2 Proposed presentation contexts 27
B.2.1.2.2 Transfer of image encoded with explicit VR and "-d" specified 27
B.2.1.2.2.1 Associated real-world activity 28
B.2.1.2.2.2 Proposed presentation contexts 28
B.2.1.2.3 Transfer of image encoded with explicit VR and "-d" not specified 28

Provided by IHS
No reproduction or networking permitted without license from IHS Not for Resale

B.2.1.2.3.1 Associated real-world activity 28
B.2.1.2.3.2 Proposed presentation contexts 28
B.2.1.2.4 SOP specific conformance 29
B.2.1.3 Association acceptance policy 30
B.2.1.3.1 Associated real-world activity 30
B.2.1.3.2 Presentation context table 30
B.2.1.3.3 SOP specific conformance 31
B.2.1.3.3.1 SOP specific conformance to verification SOP class 31
B.2.1.3.3.2 SOP specific conformance to storage SOP classes 31
B.2.1.3.4 Presentation context acceptance criterion 32
B.2.1.3.5 Transfer syntax selection policies 33
B.3 Communication profiles 33
B.3.1 Supported communications stacks (PS 3.8, PS 3.9) 33
B.3.2 TCP/IP stack 33
B.3.2.1 Physical media support 33
B.4 Extensions/specializations/privatizations 33
B.5 Configuration 33
B.5.1 AE title/presentation address mapping 34
B.5.2 Configurable parameters 34
B.5.2.1 disconfig 34
B.5.2.2 datconfig 34
B.6 Support of extended character sets 35

Provided by IHS
No reproduction or networking permitted without license from IHS
Not for Resale

© NEMA PS 3.2-1993

ACR-NEMA

Digital Imaging and Communications in Medicine
Part 2: Conformance

FOREWORD

The American College of Radiology (ACR) and the National Electrical Manufacturers Association (NEMA) formed a joint committee to develop a standard for Digital Imaging and Communications in Medicine (DICOM). This DICOM Standard was developed according to the NEMA procedures.
This standard is developed in liaison with other standardization organizations including CEN TC251 in Europe and JIRA in Japan, with review also by other organizations including IEEE, HL7 and ANSI in the USA.

The DICOM Standard is structured as a multi-part document using the guidelines established in the following document:

— ISO/IEC Directives, 1989 Part 3: Drafting and Presentation of International Standards.

This document is one part of the DICOM Standard which consists of the following parts:

PS 3.1: Introduction and Overview

PS 3.2: Conformance

PS 3.3: Information Object Definitions

PS 3.4: Service Class Specifications

PS 3.5: Data Structures and Encoding

PS 3.6: Data Dictionary

PS 3.7: Message Exchange

PS 3.8: Network Communication Support for Message Exchange

PS 3.9: Point-to-Point Communication Support for Message Exchange

These parts are related but independent documents. Their development level and approval status may differ. Additional parts may be added to this multi-part standard. Part 1 should be used as the base reference for the current parts of this standard.

Provided by IHS
No reproduction or networking permitted without license from IHS
Not for Resale

Digital Imaging and Communications in Medicine
Part 2: Conformance

1 Scope and field of application

Part 2 of the DICOM Standard defines principles that implementations claiming conformance to the Standard shall follow. Part 2 specifies:

— the minimum general conformance requirements that must be met by any implementation claiming conformance to the DICOM Standard. Additional conformance requirements for particular features, Service Classes, Information Objects, and communications protocols may be found in the conformance sections of other Parts of the DICOM Standard

— the purpose and structure of a Conformance Statement. Part 2 provides a framework by which conformance information can be placed into a Conformance Statement as dictated by the conformance sections of other parts of the Standard.

The DICOM Standard does not specify:

— testing or validation procedures to assess an implementation's conformance to the Standard

— testing or validation procedures to assess whether an implementation matches to its Conformance Statement

— what optional features, Service Classes, or Information Objects should be supported for a given type of device

2 Normative references

The following standards contain provisions which, through reference in this text, constitute provisions of this Standard. At the time of publication, the editions indicated were valid. All standards are subject to revision, and parties to agreements based on this Standard are encouraged to investigate the possibilities of applying the most recent editions of the standards indicated below.

ISO/IEC Standards — Directives 1989 Part 3 - Drafting and presentation of International Standards

ISO 7498-1 — Information processing systems - Open Systems Interconnection - Basic Reference Model.

ISO 8649:1988 — Information processing systems - Open Systems Interconnection - Service definition for the Association Control Service Element (ACSE)

ISO 8822:1988 — Information Processing Systems - Open Systems Interconnection - Connection oriented presentation service definition

Provided by IHS
No reproduction or networking permitted without license from IHS Not for Resale

3 Definitions

For the purposes of this Standard the following definitions apply.

3.1 *Reference model definitions*

This part of the Standard makes use of the following terms defined in ISO 7498-1:

a) application entity
b) application entity title
c) protocol data unit
d) transfer syntax

3.2 *ACSE service definitions*

This part of the Standard makes use of the following terms defined in ISO 8649:

a) association or application association
b) association initiator

3.3 *Presentation service definitions*

This part of the Standard makes use of the following terms defined in ISO 8822:

a) abstract syntax
b) abstract syntax name
c) presentation context
d) transfer syntax
e) transfer syntax name

3.4 *DICOM introduction and overview definitions*

This part of the Standard makes use of the following terms defined in PS 3.1:

a) Information Object

3.5 *DICOM information object definitions*

This part of the Standard makes use of the following terms defined in PS 3.3:

a) information object definition (IOD)

3.6 *DICOM service class specification definitions*

This part of the Standard makes use of the following terms defined in PS 3.4:

a) real-world activity
b) service class

Provided by IHS
No reproduction or networking permitted without license from IHS Not for Resale

c) service class user (SCU)
d) service class provider (SCP)
e) service-object pair (SOP) class
f) meta SOP class

3.7 *DICOM data structure and encoding definitions*

This part of the Standard makes use of the following terms defined in PS 3.5:

a) DICOM defined UID
b) privately defined UID
c) Transfer Syntax: (Standard and Private)
d) unique identifier (UID)

3.8 *DICOM message exchange definitions*

This part of the Standard makes use of the following terms defined in PS 3.7:

a) extended negotiation
b) Implementation class UID.

3.9 *DICOM upper layer service definitions*

This part of the Standard makes use of the following terms defined in PS 3.8:

a) unique identifier (UID)
b) DICOM upper layer service
c) presentation address

3.10 *DICOM conformance*

This part of the DICOM Standard uses the following definitions:

3.10.1 conformance statement: A formal statement associated with a specific implementation of the DICOM Standard. It specifies the Service Classes, Information Objects, and Communications Protocols supported by the implementation.

3.10.2 standard SOP class: A SOP Class defined in the DICOM Standard that is used in an implementation with no modifications.

3.10.3 standard extended SOP class: A SOP Class defined in the DICOM Standard extended in an implementation with additional Type 3 Attributes. The additional Attributes may either be drawn from the Data Dictionary in PS 3.6, or may be Private Attributes. The semantics of the related Standard SOP Class shall not be modified by the additional Type 3 Attributes. Therefore, the Standard Extended SOP Class utilizes the same UID as the related Standard SOP Class.

NOTE— IODs from a Standard Extended SOP Class may be freely exchanged between DICOM implementations since implementations unfamiliar with the additional Type 3 Attributes would simply ignore them.

Provided by IHS
No reproduction or networking permitted without license from IHS Not for Resale

3.10.4 specialized SOP class: A SOP Class derived from a Standard SOP Class that has been specialized in an implementation by additional Type 1, 1C, 2, 2C, or 3 Attributes. The additional Attributes may either be drawn from the Data Dictionary in PS 3.6, or may be Private Attributes. Since the semantics of the related Standard SOP Class may be modified by the additional Attributes, a Specialized SOP Class utilizes a Privately Defined UID which differs from the UID for the related Standard SOP Class.

NOTE— Since a Specialized SOP Class has a different UID than a Standard or Standard Extended SOP Class, other DICOM implementations may not recognize the Specialized SOP Class. Because of this limitation, a Specialized SOP Class should only be used when a Standard or Standard Extended SOP Class would not be appropriate. Before different implementations can exchange IODs in a Specialized SOP Class, the implementations must agree on the UID, content (in particular the additional Type 1, 1C, 2, and 2C Attributes), and semantics of the Specialized SOP Class. A Specialized SOP Class may be used to create a new or experimental SOP Class that is closely related to a Standard SOP Class. An implementation publishes a Specialized SOP Class with the hope that other implementations might use it.

3.10.5 private SOP class: A SOP Class that is not defined in the DICOM Standard, but is published in an implementation's Conformance Statement.

NOTE— Since a Private SOP Class is not defined in the DICOM Standard, other DICOM implementations may not recognize the Private SOP Class. Because of this limitation, a Private SOP Class should only be used when a Standard or Standard Extended SOP Class would not be appropriate. In order for different implementations to exchange IODs in a Private SOP Class the implementations must agree on the UID, content (in particular the Type 1, 1C, 2, and 2C Attributes), and semantics of the Private SOP Class. A Private SOP class may be used to create a totally new or experimental SOP Class. An implementation publishes a Private SOP Class with the hope that other implementations might use it.

3.10.6 standard attribute: An Attribute defined in the Data Dictionary in PS 3.6.

3.10.7 private attribute: An Attribute that is not defined in the DICOM Standard.

4 Symbols and abbreviations

The following symbols and abbreviations are used in this Part of the Standard.

4.1	**ACR**	American College of Radiology
4.2	**ACSE**	Association Control Service Element
4.3	**API**	Application Programming Interface
4.4	**ASCII**	American Standard Code for Information Interchange
4.5	**AE**	Application Entity
4.6	**ANSI**	American National Standards Institute
4.7	**CEN TC251**	Comite Europeen de Normalisation - Technical Committee 251 - Medical Informatics
4.8	**DICOM**	Digital Imaging and Communications in Medicine
4.9	**DIMSE**	DICOM Message Service Element
4.10	**DIMSE-C**	DICOM Message Service Element-Composite
4.11	**DIMSE-N**	DICOM Message Service Element-Normalized
4.12	**HISPP**	Healthcare Informatics Standards Planning Panel
4.13	**HL7**	Health Level 7
4.14	**IE**	Information Entity
4.15	**IEEE**	Institute of Electrical and Electronics Engineers
4.16	**IOD**	Information Object Definition
4.17	**ISO**	International Standards Organization
4.18	**ISP**	International Standardized Profile

Provided by IHS
No reproduction or networking permitted without license from IHS Not for Resale

4.20	**MSDS**	Healthcare Message Standard Developers Sub-Committee
4.21	**NEMA**	National Electrical Manufacturers Association
4.22	**OSI**	Open Systems Interconnection
4.23	**PDU**	Protocol Data Unit
4.24	**SCP**	Service Class Provider
4.25	**SCU**	Service Class User
4.26	**SOP**	Service-Object Pair
4.27	**TCP/IP**	Transmission Control Protocol/Internet Protocol
4.28	**UID**	Unique Identifier

5 Conventions

5.1 *Application data flow diagram*

In a Conformance Statement, the relationships between Real-World Activities and Application Entities are illustrated by an Application Data Flow Diagram.

5.1.1 APPLICATION ENTITY

An Application Entity is depicted as a box within an Application Data Flow Diagram as shown in Figure 5.1-1.

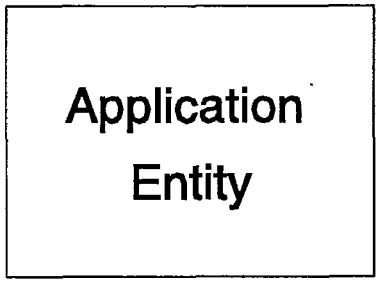

Figure 5.1-1—Application entity convention

5.1.2 REAL-WORLD ACTIVITY

A Real-World Activity is depicted as a circle within an Application Data Flow Diagram as shown in Figure 5.1-2.

Provided by IHS
No reproduction or networking permitted without license from IHS Not for Resale



Figure 5.1-2—Real-world activity convention

Circles representing multiple Real-World Activities may overlap, indicating a degree of overlap in the Real-World Activities.

5.1.3 LOCAL RELATIONSHIPS

A relationship between a local Real-World Activity and an Application Entity is depicted within an Application Data Flow Diagram by placing the local Real-World Activity to the left of the related Application Entity with a double headed arrow drawn between them as shown in Figure 5.1-3.

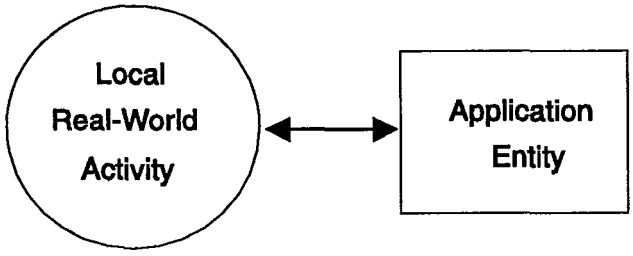

Figure 5.1-3—Local relationship convention

An Application Entity may be associated with multiple Real-World Activities.

A Real-World Activity may be associated with multiple Application Entities.

5.1.4 ASSOCIATIONS

An association between a local Application Entity and a remote Application Entity supporting a remote Real-World Activity is depicted within an Application Data Flow Diagram by placing the remote Real-World Activity to the right of the related local Application Entity with one or two arrows drawn between them as shown in Figure 5.1-4. The dashed line represents the DICOM Standard Interface between the local Application Entities, and whatever remote Application Entities that handle the remote Real-World Activities. An arrow from the local Application Entity to the remote Real-World Activity indicates that an occurrence of the local Real-World Activity will cause the local Application Entity to initiate an association for the purpose of causing the remote Real-World Activity to occur. An arrow from the remote Real-World Activity to the local Application Entity indicates that the local Application Entity expects to receive an association request when the remote Real-World Activity occurs, causing the local Application Entity to perform the local Real-World Activity.

Provided by IHS
No reproduction or networking permitted without license from IHS Not for Resale

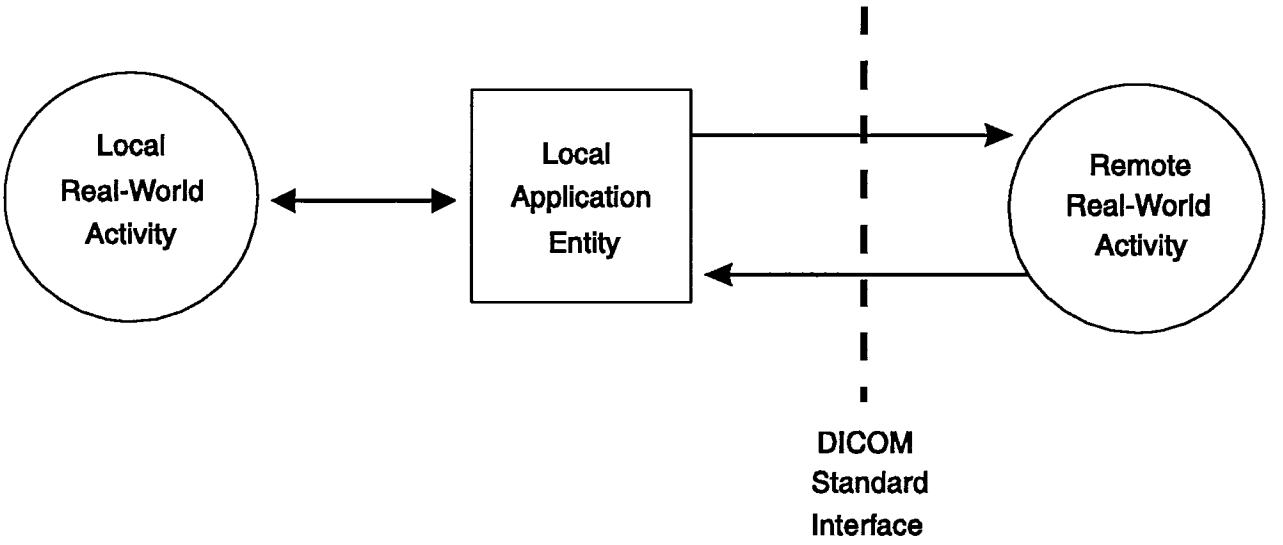

Figure 5.1-4—Associations convention

6 Purpose of a conformance statement

The DICOM Standard contains many optional components. An implementation may select from:

— several choices of communications means (i.e., OSI, TCP/IP, DICOM Point to Point, Storage Media Interchange, etc.)

— several choices of transfer syntaxes for encoding Information Objects

— several SOP Classes (combinations of Information Object Definitions and related services), many of which are designed for specific tasks or specific modalities

— within the IODs, several optional (Type 3) Attributes which an implementation may choose to use or ignore

An implementation need not employ all the optional components of the DICOM Standard. After meeting the minimum general requirements, a conformant DICOM implementation may utilize whatever SOP classes, communications protocols, optional (Type 3) Attributes, etc., needed to accomplish its designed task.

Provided by IHS
No reproduction or networking permitted without license from IHS Not for Resale

NOTE— In fact, it is expected that an implementation might only support the SOP Classes related to its Real-World Activities. For example, a simple film digitizer may not support the SOP Classes for other imaging modalities since such support may not be required. On the other hand, a complex storage server might be required to support SOP Classes from multiple modalities in order to adequately function as a storage server. The choice of which components of the DICOM Standard are utilized by an implementation depends heavily on the intended application and is beyond the scope of this Standard.

In addition, the DICOM Standard allows an implementation to extend or specialize the DICOM defined SOP Classes, as well as define Private SOP Classes.

A *Conformance Statement* allows a user to determine which optional components of the DICOM Standard are supported by a particular implementation, and what additional extensions or specializations an implementation adds. By comparing the Conformance Statements from two different implementations, a knowledgeable user should be able to determine whether and to what extent communications might be supported between the two implementations.

A Conformance Statement consists of the following major parts:

— an Implementation Model which describes the Application Entities in the implementation and how they relate to both local and remote Real-World Activities

— a more detailed specification of each Application Entity, listing the SOP Classes supported and outlining the policies with which it initiates or accepts associations

— for each Application Entity and Real-World Activity combination, a description of proposed (for Association Initiation) and acceptable (for Association Acceptance) Presentation Contexts

NOTE— A Presentation Context consists of an Abstract Syntax plus a list of acceptable Transfer Syntaxes. The Abstract Syntax identifies one SOP Class or Meta SOP Class (a collection of related SOP Classes identified by a single Abstract Syntax UID). By listing the Application Entities with their proposed and accepted Presentation Contexts, the Conformance Statement is identifying the set of Information Objects and Service Classes which are recognized by this implementation.

— for each SOP Class related to an Abstract Syntax, a list of any SOP options supported

— a set of communications protocols which this implementation supports

— a description of any extensions, specializations, and publicly disclosed Privatizations in this implementation

— a section describing DICOM related configuration details

— a description of any implementation details which may be related to DICOM conformance or interoperability

Provided by IHS
No reproduction or networking permitted without license from IHS Not for Resale

7 Conformance requirements

An implementation claiming DICOM conformance shall

— conform to the minimum conformance requirements defined in this section

— provide with the implementation a Conformance Statement structured according to the rules and policies in this Part including Annex A

— conform to at least one Standard or Standard Extended SOP class as defined in PS 3.4

NOTE— Conformance to a Standard or Standard Extended SOP class implies conformance to the related IOD outlined in PS 3.3, the Data Elements defined in PS 3.6, and the operations and notifications defined in PS 3.7.

— comply with the rules governing SOP Class types outlined in 7.1

— accept a Presentation Context for the Verification SOP Class as an SCP if the implementation accepts any DICOM association requests

— produce and/or process Data Sets as defined in PS 3.5

NOTE— Conformance to PS 3.6 also implies conformance to PS 3.6

— obtain legitimate right to a registered <org id> for creating UIDs (see PS 3.5) if an implementation utilizes Privately Defined UIDs (i.e., UIDs not defined in the DICOM Standard)

— support one or more of the following communications modes

a) TCP/IP (See PS 3.8)

b) OSI (See PS 3.8)

c) Point to Point (See PS 3.9)

d) Storage Media Interchange (See future Standards PS 3.10, PS 3.11, PS 3.12)

NOTE— PS 3.10, 11, and 12 define the communication of DICOM Information Objects stored on physical media. Work on these three Parts is in progress. As a consequence, PS 3.2 may need to be extended to explicitly address the conformance of DICOM Media Storage implementations

7.1 *Rules governing types of SOP classes*

Each SOP Class published in a Conformance Statement is one of four basic types. Each SOP Class in an implementation claiming conformance to the DICOM Standard shall be handled in accordance with the following rules, as dictated by the type of SOP Class.

Standard SOP Classes conform to all relevant Parts of the DICOM Standard with no additions or changes.

Provided by IHS
No reproduction or networking permitted without license from IHS Not for Resale

To claim conformance to a Standard SOP Class, an implementation must make a declaration of this fact in its Conformance Statement, and identify its selected options, roles, and behavior.

Standard Extended SOP Classes shall:

a) be a proper super set of one Standard SOP Class

b) not change the semantics of any Standard Attribute of that Standard SOP Class

c) not contain any Private Type 1, 1C, 2, or 2C Attributes

d) not change any Standard Type 3 Attributes to Type 1, 1C, 2, or 2C

e) use the same UID as the Standard SOP Class on which it is based

A Standard Extended SOP Class may include Standard and/or Private Type 3 Attributes beyond those defined in the IOD on which it is based as long as the Conformance Statement identifies the added Attributes and defines their relationship with the PS 3.3 information model.

An implementation claiming conformance with a Standard Extended SOP Class must identify in its Conformance Statement the Standard SOP Class being extended, the options, roles, and behavior selected, and describe the Attributes being added with the Standard SOP Class's IOD Model and Modules.

Specialized SOP Classes shall:

a) be completely conformant to relevant parts of the DICOM Standard

b) be based on a Standard SOP Class, i.e.

— contain all the Type 1, 1C, 2, and 2C Attributes of Standard SOP Class on which it is based

— not change the semantics of any Standard Attribute

c) use a Privately Defined UID (i.e., shall not be identified with a DICOM Defined UID)

d) be based on the DICOM Information Model in PS 3.3 and PS 3.4

Specialized SOP Classes may:

a) contain additional Standard and/or Private Type 1, 1C, 2, or 2C Attributes

b) add Private and Standard Type 3 Attributes which may or may not be published in the Conformance Statement

NOTE— The usage of any unpublished Attributes may be ignored by other users and providers of the Specialized SOP Class

An implementation claiming conformance with a Specialized SOP Class shall include in its Conformance Statement the identity of the Standard SOP Class being specialized, a description of usage of all Standard

--`,,`,,`-`-`,,`,,`,`,,`---

Provided by IHS
No reproduction or networking permitted without license from IHS Not for Resale

and Private Type 1, 1C, 2, and 2C Attributes in the Specialized SOP Class, and the associated Privately Defined UIDs.

Private SOP Classes shall:

a) be completely conformant to relevant Parts of the DICOM Standard with the possible exception that support of the DICOM Default Transfer Syntax is not required

b) not change the PS 3. 6 specification of any Standard Attributes

c) use a Privately Defined UID (i.e., shall not be identified with a DICOM Defined UID)

d) not change existing DIMSE Services or create new ones.

Private SOP Classes may:

a) use or apply DIMSE Services to privately defined or altered IODs (i.e., not necessarily be based on a Standard SOP Class)

b) designate any Standard Attribute as Type 1, 1C, 2, or 2C regardless of the Type of the Attribute in other IODs

c) define Private Attributes as Type 1, 1C, 2, or 2C

d) include Private and Standard Type 3 Attributes which may or may not be published in the Conformance Statement

An implementation claiming conformance with a Private SOP Class shall provide a PS 3.3, PS 3.4, and PS 3.6-like description of the Private SOP Class in the implementation's Conformance Statement, including descriptions of the usage of all Standard and Private Type 1, 1C, 2, or 2C Attributes in the SOP Class, the DICOM Information Model, and the Privately Defined UIDs.

NOTE— Unpublished SOP Classes (i.e., SOP Classes that are not defined in the DICOM Standard and are not defined in the Conformance Statement) are permitted in order to allow an implementation to support other abstract syntaxes within the DICOM Application Context. Such unpublished SOP Classes would utilize Privately Defined UIDs. The presence of an unpublished SOP Class does not prevent the implementation from being DICOM conformant but would have no meaning to other implementations and may be ignored.

Provided by IHS
No reproduction or networking permitted without license from IHS Not for Resale

Annex A
(Normative)
DICOM conformance statement template

A.0 Introduction

This Annex is a template which shall be used to generate a DICOM Conformance Statement. A DICOM Conformance Statement shall begin with an introduction which sets the framework. The introduction shall describe the implementation, and how, in general terms, it uses DICOM to achieve its purposes.

NOTE— The numbering scheme for numbering paragraphs in this document is to be used as a guideline in preparing the outline of the Conformance Statement. The Conformance Statement is not required to have exactly the same paragraph numbers. In fact, any particular Conformance Statement will have special considerations which will cause the outline to differ in certain details from the outline of this document.

A.1 Implementation model

After the introduction, the first section of the Conformance Statement is a description of the Implementation Model. The Implementation Model consists of an Application Data Flow Diagram, functional definitions of the Application Entities and their related Real-World Activities, and if applicable, a description of the sequencing of Real-World Activities.

A.1.1 *Application data flow diagram*

As part of the Implementation Model, an Application Data Flow Diagram shall be included. This diagram represents all of the Application Entities present in an implementation, and graphically depicts the relationship of the AE's use of DICOM to Real-World Activities. Figure A.1-1 is a template for such a Data Flow Diagram.

Accompanying the Application Data Flow Diagram shall be a discussion of the Application Data Flow represented. In this illustration, according to Figure A.1-1, an occurrence of local Real-World Activity A will cause local Application Entity 1 to initiate an association for the purpose of causing Real-World Activity X to occur remotely. It also shows that Real-World Activities B and Y are interactively related via Application Entity 2, with B being local and Y remote, and that local Application Entity 3 expects to receive an association request when remote Real-World Activity Z occurs so that it can perform Real-World Activity C and/or D. Figure A.1-1 also suggests a degree of overlap in some of the Real-World Activities. Any such overlap shall be discussed in this section of a Conformance Statement.

A.1.2 *Functional definitions of AE's*

The next part of the Implementation Model shall contain a functional definition for each local Application Entity. This shall describe in general terms the functions to be performed by the AE, and the DICOM services used to accomplish these functions. In this sense, "DICOM services" refers not only to DICOM Service Classes, but also to lower level DICOM services, such as Association Services.

Provided by IHS
No reproduction or networking permitted without license from IHS Not for Resale

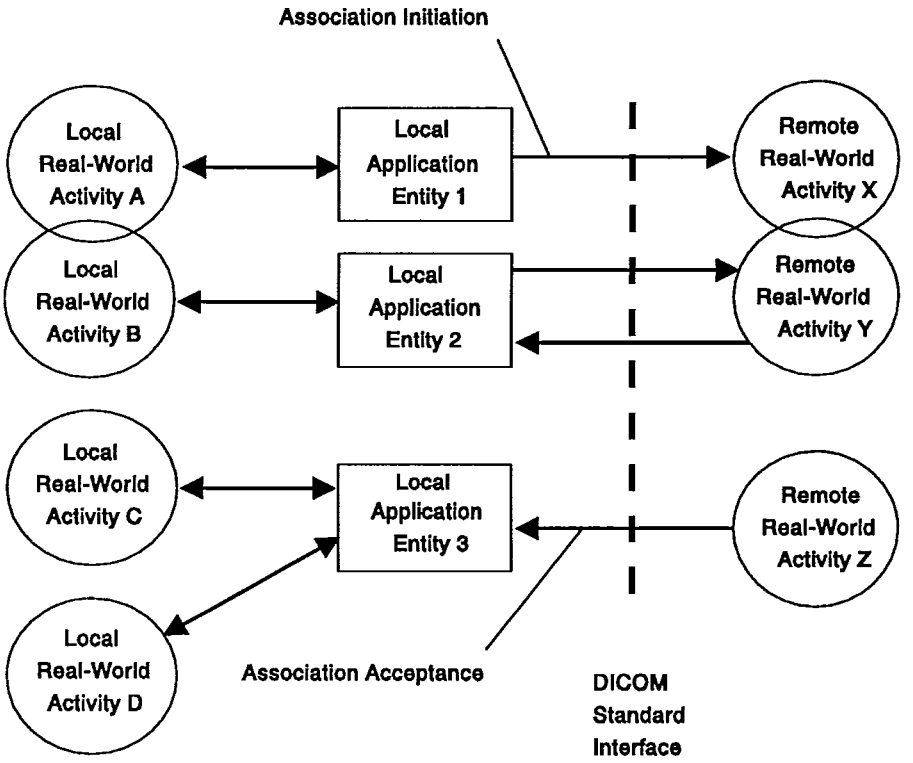

Figure A.1-1—Implementation model

A.1.3 *Sequencing of real-world activities*

If applicable, this section shall contain a description of sequencing of Real-World Activities which the AE's require.

NOTE— A example of a situation in which such a description is required is an AE which supported both SOP's of the Storage Service Class, and SOP's of the Study Content Notification Service Class. Some implementations would require that the images be stored before the Study Content Notification is sent, some after, some might be insensitive to such sequencing.

A.2 AE specifications

The next section in the DICOM Conformance Statement is a set of Application Entity Specifications. There shall be one such specification for each Application Entity type.

A.2.x AEX Specification

Each individual AE Specification has a subsection, A.2.x. There are as many of these subsections as there are different AE's in the implementation. That is, if there are two distinct AE's, then there will be two subsections, A.2.1, and A.2.2.

The specification for an Application Entity shall contain a statement of the form:

Provided by IHS
No reproduction or networking permitted without license from IHS Not for Resale

"This Application Entity provides Standard Conformance to the following DICOM V3.0 SOP Class(es) as an SCU: [include list of SOP Classes], and to the following DICOM V3.0 SOP Class(es)as an SCP: [include list of SOP Classes]."

A.2.x.1 Association establishment policies

Each AE Specification shall contain a description of the Association Establishment policies of the AE. This describes the conditions under which the AE will either initiate or accept an association.

A.2.x.1.1 General

This section describes any general rules governing the initiation of associations. It shall include the maximum PDU size which will be offered/accepted.

A.2.x.1.2 Number of associations

The number of simultaneous associations which an Application Entity may support shall be specified. Any rules governing simultaneity of associations shall be defined here.

NOTE— For example an AE may have the capability to have up to 10 simultaneous associations, but may limit itself to have no more that 2 with any particular other AE. There may also be simultaneity policies based upon combinations of simultaneous Real-World Activities

A.2.x.1.3 Asynchronous nature

If the implementation supports negotiation of multiple outstanding transactions, this shall be stated here, along with the maximum number of outstanding transactions supported.

A.2.x.1.4 Implementation identifying information

The value supplied for Implementation Class UID shall be documented here. If a version name is supplied, this fact shall be documented here. Policies defining the values supplied for version name may be stated here.

A.2.x.2 Association initiation by real-world activity

If an AE initiates Associations, the conditions under which it will initiate an Association shall be enumerated here. If the AE never initiates Associations, the section A.2.x.2 shall consist of a single sentence stating this fact, with no subsections. Otherwise, section A.2.x.2 shall contain a subsection A.2.x.2.i for each case of a Real-World Activity which will cause an association to be initiated.

A.2.x.2.i Real-world activity i

A.2.x.2.i.1 Associated real-world activity

Subsection A.2.x.2.i.1 shall describe the part of the Real-World Activity which has caused the AE to initiate a DICOM association.

Provided by IHS
No reproduction or networking permitted without license from IHS Not for Resale

A.2.x.2.i.2 Proposed presentation contexts

Each time an association is initiated, the Association Initiator proposes a number of Presentation Contexts to be used on that association. In this subsection, the Presentation Contexts proposed by Application Entity <x> for Real-World Activity <i> shall be defined in a table with the following format:

Table A.2.x.2.i.2-1—Proposed presentation contexts for application entity <x> and real-world activity <i>

Presentation Context Table					
Abstract Syntax		Transfer Syntax		Role	Extended Negotiation
Name	UID	Name List	UID List		
name_a	AS_UID_a	XS_Name_1, ..., XS_Name_n	XS_UID_1, ..., XS_UID_n	SCP | SCU | BOTH	None | See NOTE | See table A.2.x.2.i.2-j
...	...	...	...	...	...

NOTE— Describes the content of any extended negotiation done for the SOP Classes of this Presentation Context. One note may serve multiple Presentation Contexts, as a single Abstract Syntax often corresponds to a single SOP class which may appear in different Presentation Contexts.

In Figure A.2.x.2.i.2, the following meanings are assigned to the fields:

<name_a> This is the name of the Abstract Syntax to be used with this Presentation Context.
<AS_UID_a> This is the UID of the Abstract Syntax to be used for this Presentation Context.
<XS_Name_n> This is the name of a transfer syntax which may be used for this Presentation Context.
<XS_UID_n> The UID of the corresponding transfer syntax

In the event that the Abstract Syntax of the Presentation Context represents a Meta-SOP Class (that is, it includes many SOP Classes) and extended negotiation is supported for some of these SOP Classes, the following table is required to define this extended negotiation. This table is referenced in Table A.2.x.2.i.2-1:

SOP Class name	SOP Class UID	Extended Negotiation
Name_i	SOP_UID_i	None | See NOTE
...	...	...

NOTE— Describes the content of any extended negotiation done for this SOP Class. One note may serve multiple Presentation Contexts, as a SOP class which may appear in different Presentation Contexts and/or Meta SOP Classes.

A.2.x.2.i.2.j SOP specific conformance statement for SOP class j

Here is where the SOP Specific Conformance for each particular SOP Class j (for real world event i, by AE x) is stated. This statement shall be as described in the SOP specific conformance statement section of PS 3.4 (or relevant private SOP definition). It shall include the content of any extended negotiation.

Provided by IHS
No reproduction or networking permitted without license from IHS Not for Resale

A.2.x.3 Association acceptance policy

If an AE accepts Associations, the conditions under which it will accept an association shall be enumerated here. If the AE never accepts associations, the section A.2.x.2 shall consist of a single sentence stating this fact, with no subsections. Otherwise, section A.2.x.2 shall contain a subsection A.2.x.2.i for each case of a Real-World Activity under which an association will be accepted.

A.2.x.3.i Real-world activity i

The title of the section shall reflect the condition under which the association is accepted. This section shall contain a brief description of this condition.

A.2.x.3.i.1 Associated real-world activity

The section shall include a description of the Real-World Activity which is associated with this association.

A.2.x.3.i.2 Presentation context table

Table A.2.x.3.i.2-1—Acceptable presentation contexts for application entity <x> and real-world activity <i>

Presentation Context Table					
Abstract Syntax		Transfer Syntax		Role	Extended Negotiation
Name	UID	Name List	UID List		
name_a	AS_UID_a	XS_Name_a name_b	XS_UID_a AS_UID_b	SCP| SCU| Both	See NOTE | None| See table A.2.x.3.i.2-j
...	...	...	...	...	...

NOTE— Describes the content of any extended negotiation done for the SOP Classes of this Presentation Context. One note may serve multiple Presentation Contexts, as a single Abstract Syntax often corresponds to a single SOP class which may appear in different Presentation Contexts.

In Figure A.2.x.3.i.2, the following meanings are assigned to the fields:

<name_a> This is the name of the Abstract Syntax to be used with this Presentation Context
<AS_UID_a> This is the UID of the Abstract Syntax to be used for this Presentation Context
<XS_Name_a> This is the name of a Transfer Syntax which may be used for this Presentation Context
<XS_UID_a> The UID of the corresponding transfer syntax

In the event that the Abstract Syntax of the Presentation Context represents a Meta-SOP Class (that is, it includes many SOP Classes) and extended negotiation is supported for some of these SOP Classes, the following table is required to define this extended negotiation. This table is referenced in Table A.2.x.3.i.2-1.

SOP Class name	SOP Class UID	Extended Negotiation
Name_i	SOP_UID_i	None | See NOTE
...	...	...

Provided by IHS
No reproduction or networking permitted without license from IHS Not for Resale

NOTE— Describes the content of any extended negotiation done for this SOP Class. One note may serve multiple Presentation Contexts, as a SOP class which may appear in different Presentation Contexts and/or Meta SOP Classes.

A.2.x.3.i.2.j SOP specific conformance for SOP class j

Here is SOP specific conformance for each particular SOP Class j (for real world event i, by AE x) is stated. This statement shall be as described in the SOP specific conformance section of PS 3.4 (or relevant private SOP definition). It shall include the content of any extended negotiation.

A.2.x.3.i.3 Presentation context acceptance criterion

Any rules which govern the acceptance of presentation contexts for this AE shall be stated here. This includes rules for which combinations of Abstract/Transfer Syntaxes are acceptable, and rules for prioritization of presentation contexts.

A.2.x.3.i.4 Transfer syntax selection policies

Rules which govern selection of transfer syntax within a presentation context shall be stated here.

A.3 Communication Profiles

A.3.1 *Supported communication stacks (PS 3.8, PS 3.9)*

A.3.x OSI stack

If the OSI communication stack is supported, then this section shall contain a description of the conformance to ISO profiles.

A.3.x.1 International standardized profile (ISP)

This sections states the ISP's which are supported.

NOTE— This concept of a "Profile" is defined by the ISO TR 10000 and called an ISO International Standardized Profile or ISP. This same concept is defined as a "Functional Standard" by CEN and the European Workshop on Open Systems (EWOS). In the USA, the National Institute for Standards and Technology (NIST) is hosting an OSI Implementors Workshop which defines such profiles as "Implementor Agreements". These profiles are used as the basis of Government Procurement Profiles (e.g. US or UK GOSIP) or Industry Procurement Profiles (e.g. MAP or TOP).

A.3.x.y API

If applicable, this section shall state the application programming interface to an OSI Stack which is used for this implementation. This is only applicable if the implementation is a software package intended to be integrated into different environments.

A.3.x.z Physical media support

If applicable, this section describes the physical media supported.

Provided by IHS
No reproduction or networking permitted without license from IHS Not for Resale

A.3.x TCP/IP stack

A.3.x.y API

If applicable, this section shall state the application programming interface to a TCP/IP Stack (e.g. Berkeley Sockets, XLI, TLI) which is used for this implementation. This is only applicable if the implementation is a software package intended to be integrated into different environments.

A.3.x.z Physical media support

If applicable, this section describes the physical media supported by the TCP/IP Stack.

A.3.x Point-to-point stack

If the Point-to-Point interface is supported, this is stated here.

A.4 Extensions/specializations/privatizations

A.4.1 *Standard extended/specialized/private SOPS*

This section describes Standard Extended SOP Class, Specialized SOP Class, or Private SOP Class which are used. It shall follow the guidelines specified in PS 3.4.

A.4.1.i Standard extended/specialized/private SOP i

This section describes a particular Standard Extended SOP Class, Specialized SOP Class, or Private SOP Class. It shall follow the guidelines specified in PS 3.4.

A.4.2 *Private transfer syntaxes*

This section describes any private Transfer Syntaxes which are listed in Table A.2.x.2.i.2 or A.2.x.3.i.2.

A.4.2.i Private transfer syntax i

This section describes a particular private transfer syntax. It shall follow the guidelines specified in PS 3.5.

A.5 Configuration

Any implementation's DICOM conformance may be dependent upon configuration which takes place at the time of installation. Issues concerning configuration shall be addressed in this section.

A.5.1 *AE title/presentation address mapping*

One of the most important installation issues is the translation from AE title to Presentation Address. How this is to be performed shall be described in this section.

Provided by IHS
No reproduction or networking permitted without license from IHS Not for Resale

A.5.2 *Configurable parameters*

Another important issue is the specification of certain operational parameters, which may be based upon configuration information. These include the following.

— Number of simultaneous associations

— Maximum PDU size

— Time out

Any operational parameters which may influence conformance and are based upon configurations shall be described here.

A.6 Support of extended character sets

Any support for Extended Character Sets shall be described here.

Provided by IHS
No reproduction or networking permitted without license from IHS Not for Resale

© NEMA PS 3.2-1993

Annex B
(Informative)
DICOM conformance statement sample

B.0 Introduction

This Annex is a sample DICOM Conformance Statement for a fictitious DICOM Implementation. It is presented as an example only. The viability of such an implementation should not be assumed as the purpose of this Annex is only to guide the writer of DICOM Conformance Statements by providing a Conformance Statement example.

B.1 Implementation model

The application chosen for this example is simple transfer of images using the DICOM Storage Service Class. The application presented accomplishes movement of images using a simple, UNIX command line interface.

B.1.1 *Application data flow diagram*

DIS (for DICOM Image Store) and DAT (for DICOM Automated Transfer) are UNIX applications for the transfer of DICOM images. DIS is invoked by entering the "dis" command. The "dis" command is used to store an image (which must be contained in a local file) on a remote system. The format of the "dis" command is as follows:

dis [-v] [-d] [-p] <destination> <file_list>

The destination specifies the Application Entity title of the destination of the C-STORE operation. The <file_list> specifies the list of files to be sent. The "-v" option specifies that the file is to be checked for validity before being stored. The "-d" option specifies that the file is to be transferred in the format preferred by the destination (i.e. the set of presentation contexts will be structured to allow the destination to choose only its "preferred" transfer syntax). The "-p" option indicates that the file is to be purged after a successful transfer.

DAT is invoked by use of the "dat" command. The "dat" command has the following format:

dat [-v]

DAT is a daemon; it will detach itself from the terminal and run continuously until killed. The "-v" option specifies that the file formats are to be verified. See Figure B.1-1.

B.1.2 *Functional definitions of AE's*

When DIS is invoked, it will go through all of the files in its file list. It expects these files to be in the file format specified by PS 3.10. For each file in the list, DIS determines the appropriate Presentation Contexts from the headers of these files and proposes an appropriate association for the transfer of this image to the destination. It writes a single line to standard out with the file name and completion status of the transfer of the file.

Provided by IHS
No reproduction or networking permitted without license from IHS
Not for Resale

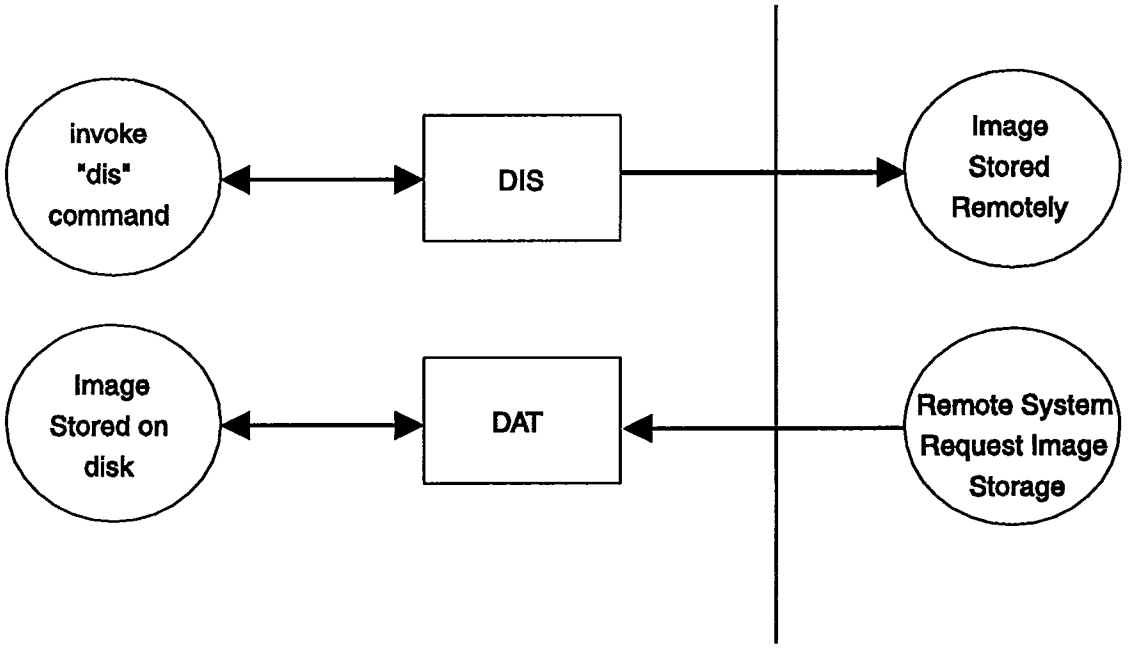

Figure B.1-1—DIS and DAT implementation model

DAT waits for another application to connect at the presentation address configured for its Application Entity Title. When another application connects, DAT expects it to be a DICOM application. DAT will accept associations with Presentation Contexts for SOP Classes of the Storage Service Class. It will receive images on these Presentation Contexts and write them to files in the format specified in PS 3.10. It can be configured to invoke a UNIX command upon successful receipt of an image.

B.1.3 *Sequencing of real-world activities*

Not Applicable.

B.2 AE specifications

Since DIS only initiates associations and DAT only accepts associations, the DIS application and the DAT daemon can be configured either to act as different Application Entities, or to act as a single Application Entity. In order to simplify this description, they are described as a single Application Entity. Since the operational parameters (including AE title) of DIS and DAT are each derived from configuration files in the /etc/DICOM directory, although multiple instances of DIS may be running simultaneously, each represents the same Application Entity. DAT will spawn a new copy of itself for each new connection, each representing the same Application Entity.

Provided by IHS
No reproduction or networking permitted without license from IHS Not for Resale

B.2.1 *DIS and DAT—specification*

DIS and DAT provide Standard Conformance to the following DICOM V3.0 SOP Classes as both an SCU and an SCP:

SOP Class Name	SOP Class UID
Computed Radiography Image Storage SOP Class	1.2.840.10008.5.1.4.1.1.1
CT Image Storage SOP Class	1.2.840.10008.5.1.4.1.1.2
MR Image Storage SOP Class	1.2.840.10008.5.1.4.1.1.4
Nuclear Medicine Image Storage SOP Class	1.2.840.10008.5.1.4.1.1.5
Ultrasound Image Storage SOP Class	1.2.840.10008.5.1.4.1.1.6
Secondary Capture Image Storage SOP Class	1.2.840.10008.5.1.4.1.1.7

B.2.1.1 ASSOCIATION ESTABLISHMENT POLICIES

B.2.1.1.1 General

DIS will attempt to establish an association whenever it is invoked with valid parameters (including a known destination and valid DICOM format files). It will only attempt to establish associations if it determines that the file has a valid group 0002 header and that the Abstract Syntax and Transfer Syntax specified in the file header are valid. If the "-v" option is specified, then DIS will validate the contents of the file against the IOD for the SOP Class.

The maximum PDU size which DIS will use is configurable, with a minimum of 2K.

B.2.1.1.2 Number of associations

DIS will attempt only one association establishment at a time. However, multiple copies of DIS may be invoked simultaneously. There is no synchronization attempted between multiple copies of DIS, so the DIS AE may attempt a number of simultaneous associations limited only by the resources of the computer systems upon which it is run, and by policies external to DIS which place limits on the number of times it may be invoked simultaneously.

The number of simultaneous associations which will be accepted by DAT are limited only by the kernel parameters of the underlying TCP/IP implementation. DAT will spawn a new process for each connection request it receives. Therefore, DAT can have multiple simultaneous connections, and there are no inherent limitations on the total number of simultaneous associations which the Application Entity represented by DIS and DAT can maintain.

B.2.1.1.3 Asynchronous nature

DIS will only send a single image on an association. DAT will only allow a single outstanding operation on an Association. Therefore, neither DIS nor DAT will perform asynchronous operations window negotiation.

Provided by IHS
No reproduction or networking permitted without license from IHS Not for Resale

B.2.1.1.4 Implementation identifying information

Both DIS and DAT will provide a single Implementation Class UID which is "1.840.xxxxxxx.yyy.etc.ad.inf.usw." DIS will provide an implementation version name of "DIS v1.0" and DAT will provide an implementation version name of "DAT v1.0."

B.2.1.2 ASSOCIATION INITIATION POLICY

DIS attempts to initiate a new association for each file it attempts to transfer. There are three cases of this Real-World Activity (image transfer) to consider:

a) the image is encoded with Implicit VR
b) the image is encoded with Explicit VR and the "-d" option is specified
c) the image is encoded with Explicit VR and the "-d" option is not specified

B.2.1.2.1 Transfer of image encoded with implicit VR

B.2.1.2.1.1 Associated real-world activity

The associated Real-World Activity is the attempt to transfer a file which is encoded with implicit VR. DIS is unable to translate the file into any other transfer syntax. Therefore it only offers a single Transfer Syntax for the transfer of the file.

B.2.1.2.1.2 Proposed presentation contexts

In this case, DIS will only propose a single Presentation Context, as shown in Table B.2-1. This Presentation Context will use the SOP Class UID specified in the header of the file as the proposed Abstract Syntax, and the Transfer Syntax specified in the header of the file (which in this case is "DICOM Implicit VR") as the proposed Transfer Syntax.

Table B.2-1—Proposed presentation contexts for DIS, file encoded with implicit VR

Presentation Context Table					
Abstract Syntax		Transfer Syntax		Role	Extended Negotiation
Name	UID	Name List	UID List		
See Note	See Note	DICOM Implicit VR Little Endian Transfer Syntax	1.2.840.10008.1.2	SCU	None

NOTE— The Abstract Syntax Corresponds to the SOP Class UID specified in the header of the image file to be transferred.

B.2.1.2.2 Transfer of image encoded with explicit VR and "-d" specified

Provided by IHS
No reproduction or networking permitted without license from IHS Not for Resale

B.2.1.2.2.1 Associated real-world activity

The associated Real-World Activity is the request to transfer a file encoded with explicit VR, with the "-d" option specified. DIS is able to translate the file into any other native Transfer Syntax. Since the "-d" option is specified, then it will propose all of these Transfer Syntaxes in a single Presentation Context to allow the destination to choose the preferred Transfer Syntax.

B.2.1.2.2.2 Proposed presentation contexts

In this case, DIS will only propose a single Presentation Context, as shown in Table B.2-2. This Presentation Context will use the SOP Class UID specified in the header of the file as the proposed Abstract Syntax, and the list of all native Transfer Syntaxes specified in PS 3.5 as the proposed Transfer Syntaxes.

Table B.2-2—Proposed presentation contexts for DIS, file encoded with explicit VR, with "-d" option specified

Presentation Context Table					
Abstract Syntax		Transfer Syntax		Role	Extended Negotiation
Name	UID	Name List	UID List		
See Note	See Note	DICOM Implicit VR Little Endian Transfer Syntax, DICOM Explicit VR Big Endian Transfer Syntax, DICOM Explicit VR Little Endian Transfer Syntax	1.2.840.10008.1.2 1.2.840.10008.1.2.2. 1.2.840.10008.1.2.1	SCU	None

NOTE— The Abstract Syntax Corresponds to the SOP Class UID specified in the header of the image file to be transferred.

B.2.1.2.3 Transfer of Image encoded with explicit VR and "-d" not specified

B.2.1.2.3.1 Associated real-world activity

The associated Real-World Activity is the request to transfer a file encoded with explicit VR, with the "-d" option not specified. DIS is able to translate the file into any other native Transfer Syntax. Since the "-d" option is not specified, then it will propose these Transfer Syntaxes in three different Presentation Contexts. DIS expects the destination to accept all Presentation Contexts which it is capable of supporting. Thus, the choice of Transfer Syntax for the transfer of the image (if more than one is supported by both AE's) is left to DIS.

B.2.1.2.3.2 Proposed presentation contexts

In this case, DIS will only propose three Presentation Contexts, as shown in Table B.2-3. These Presentation Contexts will use the SOP Class UID specified in the header of the file as the proposed Abstract Syntax, and the list of all native Transfer Syntaxes specified in PS 3.5 as the proposed Transfer Syntaxes.

Provided by IHS
No reproduction or networking permitted without license from IHS Not for Resale

Table B.2-3—Proposed presentation contexts for DIS, file encoded with explicit VR, with "-d" option not specified

Presentation Context Table					
Abstract Syntax		Transfer Syntax		Role	Extended Negotiation
Name	UID	Name List	UID List		
See Note	See Note	DICOM Implicit VR Little Endian Transfer Syntax	1.2.840.10008.1.2	SCU	None
See Note	See Note	DICOM Explicit VR Big Endian Transfer Syntax	1.2.840.10008.1.2.2	SCU	None
See Note	See Note	DICOM Explicit VR Little Endian Transfer Syntax	1.2.840.10008.1.2.1	SCU	None

NOTE— The Abstract Syntax Corresponds to the SOP Class UID specified in the header of the image file to be transferred.

B.2.1.2.4 SOP specific conformance

If DIS is unable to determine the appropriate Abstract and Transfer Syntax for a file, or if the Abstract and Transfer Syntax are not supported by DIS, or if the "-v" option is specified and the image does not fulfill the requirements of the IOD for the SOP Class, DIS will print a single line of the following form to stdout:

<date><time> <file name> bad image format

And then it continues with the next file. If DIS is unable to open an association for a particular file, it will print a single line of the following form to stdout:

<date><time> <file name> association to <destination> failed

And then it continues with the next file.

When a successful response to a C-STORE operation is received, the file will be deleted if the "-p" option was specified. A single line of the following form is written to stdout:

<date> <time> <file name> stored on <destination> [and purged]

The "and purged" will be printed only if the "-p" option was specified and DIS was able to successfully delete the file. DIS will then continue with the next file.

When a failed, refused or warning response to a C-STORE operation is received, the file will not be deleted (even if the "-p" option was specified). A single line of the following form is written to stdout:

<date> <time> <file name> transfer to <destination> bad status <status code>

DIS will then continue with the next file.

DIS will not attempt any extended negotiation.

Provided by IHS
No reproduction or networking permitted without license from IHS Not for Resale

DIS does not delete any elements from the files it transfers. Therefore the set of optional elements depends entirely on the contents of the files specified for transfer.

B.2.1.3 ASSOCIATION ACCEPTANCE POLICY

When DAT accepts an association, it will receive any images transmitted on that association and store the images on disk in the UNIX file system in the format specified by PS 3.10. DAT places no limitations on who may connect to it, nor on the number of simultaneous connects it will support.

B.2.1.3.1 Associated real-world activity

The associated Real-World Activity associated with the C-STORE operation is the storage of the image on the disk of the system upon which DAT is running. DAT will issue a failure status if it is unable to store the image on disk, or if the "-v" option was specified when DAT was invoked and the image transferred does not conform to the IOD of the SOP class under which it was transmitted.

DAT can also be configured to invoke a UNIX application (via an exec operation) for each image received. The full path name of the image file will be passed to the application as a command line parameter. If such an application is specified, DAT will not respond to the C-STORE-REQ until the application has completed. The status returned by the application will be used as the status of the C-STORE-RSP.

B.2.1.3.2 Presentation context table

Any of the Presentation Contexts shown in Table B.2-4 are acceptable for DAT to receive images.

Table B.2-4—Acceptable presentation contexts for DAT

Presentation Context Table					
Abstract Syntax		Transfer Syntax		Role	Extended Negotiation
Name	UID	Name	UID		
Verification	1.2.840.10008.1.1	DICOM Implicit VR Little Endian	1.2.840.10008.1.2	SCP	None
Computed Radiography Image	1.2.840.10008.5.1.4.1.1.1	DICOM Implicit VR Little Endian	1.2.840.10008.1.2	SCP	None
Computed Radiography Image	1.2.840.10008.5.1.4.1.1.1	DICOM Explicit VR Big Endian	1.2.840.10008.1.2.2	SCP	None
Computed Radiography Image	1.2.840.10008.5.1.4.1.1.1	DICOM Explicit VR Little Endian	1.2.840.10008.1.2.1	SCP	None
CT Image	1.2.840.10008.5.1.4.1.1.2	DICOM Implicit VR Little Endian	1.2.840.10008.1.2	SCP	None

Table continued on next page

Provided by IHS
No reproduction or networking permitted without license from IHS Not for Resale

Table B.2-4 continued

CT Image	1.2.840.10008.5.1.4.1.1.2	DICOM Explicit VR Big Endian	1.2.840.10008.1.2.2	SCP	None
CT Image	1.2.840.10008.5.1.4.1.1.2	DICOM Explicit VR Little Endian	1.2.840.10008.1.2.1	SCP	None
MR Image	1.2.840.10008.5.1.4.1.1.4	DICOM Implicit VR Little Endian	1.2.840.10008.1.2	SCP	None
MR Image	1.2.840.10008.5.1.4.1.1.4	DICOM Explicit VR Big Endian	1.2.840.10008.1.2.2	SCP	None
MR Image	1.2.840.10008.5.1.4.1.1.4	DICOM Explicit VR Little Endian	1.2.840.10008.1.2.1	SCP	None
Nuclear Medicine Image	1.2.840.10008.5.1.4.1.1.5	DICOM Implicit VR Little Endian	1.2.840.10008.1.2	SCP	None
Nuclear Medicine Image	1.2.840.10008.5.1.4.1.1.5	DICOM Explicit VR Big Endian	1.2.840.10008.1.2.2	SCP	None
Nuclear Medicine Image	1.2.840.10008.5.1.4.1.1.5	DICOM Explicit VR Little Endian	1.2.840.10008.1.2.1	SCP	None
Ultrasound Image	1.2.840.10008.5.1.4.1.1.6	DICOM Implicit VR Little Endian	1.2.840.10008.1.2	SCP	None
Ultrasound Image	1.2.840.10008.5.1.4.1.1.6	DICOM Explicit VR Big Endian	1.2.840.10008.1.2.2	SCP	None
Ultrasound Image	1.2.840.10008.5.1.4.1.1.6	DICOM Explicit VR Little Endian	1.2.840.10008.1.2.1	SCP	None
Secondary Capture Image	1.2.840.10008.5.1.4.1.1.7	DICOM Implicit VR Little Endian	1.2.840.10008.1.2	SCP	None
Secondary Capture Image	1.2.840.10008.5.1.4.1.1.7	DICOM Explicit VR Big Endian	1.2.840.10008.1.2.2	SCP	None
Secondary Capture Image	1.2.840.10008.5.1.4.1.1.7	DICOM Explicit VR Little Endian	1.2.840.10008.1.2.1	SCP	None

B.2.1.3.3 SOP specific conformance

B.2.1.3.3.1 SOP Specific conformance to verification SOP class

DAT provides standard conformance to the DICOM Verification Service Class.

B.2.1.3.3.2 SOP specific conformance to storage SOP classes

DAT conforms to the SOP's of the Storage Service Class at Level 2 (Full). No elements are discarded or coerced by DAT. In the event of a successful C-STORE operation, the Image has successfully been written to disk as a standard UNIX file. As such, it may be accessed in the same manner as any other UNIX file. DAT will never delete a file which it has received; the duration of the storage of the image is determined by other users of the UNIX system.

Provided by IHS
No reproduction or networking permitted without license from IHS Not for Resale

Unless the "-v" option is specified, a successful C-STORE response does not mean that DAT has stored a valid DICOM Composite Information Object. Unless the "-v" option is enabled, DAT does not perform any validation of the data beyond the DICOM Command. DAT is a "trusting" application.

This behavior can be extended by configuration. DAT can be configured to invoke a UNIX application for each file received. This application can provide additional semantics to a successful C-STORE operation. Any such semantics are beyond the scope of this Conformance Statement, but should be documented in the Conformance Statement of any system in which DAT is used as a building block. DAT will not invoke such an application unless the file has been successfully stored. Any such application is expected to return a DICOM status code. DAT provides no validation of any return codes, but will return this status to the SCU.

Caution should be exercised when extending the semantics of the C-STORE, to insure that a valid DICOM status is returned, as configuration of an improper application could render DAT non-conformant to DICOM.

If DAT returns one of the following status codes, then the C-STORE was unsuccessful:

— A700 (Out of Resources) - Indicates that there was not enough disk space to store the image. Recovery from this condition is left to the user of DAT.

— A800 (SOP Class Not Supported) - Indicates that the SOP Class of the Image in the C-STORE operation did not match the Abstract Syntax negotiated for the Presentation Context. This indicates a problem with the SCU of the Service Class.

— A900 (Data Set does not match SOP Class) - Indicates that the Data Set does not encode a instance of the SOP Class specified. This indicates a problem with the SCU of the Service Class. This status will only be returned by DAT if the "-v" option is enabled.

— C000 (Cannot understand) - Indicates that the Data Set cannot be parsed into elements by DAT. This indicates a problem with the SCU. This status will only be returned by DAT if the "-v" option is enabled.

If the "-v" option is enabled, then DAT will recognize a "warning" condition in certain cases in which the Data Set does not match the IOD of the SOP Class. In this case, the Image is stored to Disk as if the C-STORE was successful. If no UNIX application is configured to be invoked, then DAT will return the following Status:

— B007 (Data Set does not match SOP Class)

If a UNIX application to invoke is configured, the warning status will be passed to it as a command line parameter. The status returned to the SCU depends upon the status returned by the application.

B.2.1.3.4 Presentation context acceptance criterion

DAT will always accept a Presentation Context for the Verification SOP Class with the DICOM Default Transfer Syntax. In addition to this, DAT will accept up to three Presentation Contexts on an association, provided that all of these Presentation Contexts specify the same Abstract Syntax. The acceptable Presentation Contexts which DAT may accept are specified in Table B.2-4 DAT will examine proposed

Provided by IHS
No reproduction or networking permitted without license from IHS Not for Resale

Presentation Contexts in the order proposed. The first acceptable Presentation Context (other than Verification) determines the Abstract Syntax which will be used for the association. Later Proposed Presentation Contexts may be accepted if they have the same Abstract Syntax and allow a different Transfer Syntax.

B.2.1.3.5 Transfer syntax selection policies

DAT prefers to receive images encoded using an explicit transfer syntax. It may be configured to prefer either explicit big endian or explicit little endian. If offered a choice of Transfer Syntaxes in a Presentation Context, it will apply the following priority to the choice of Transfer Syntax:

a) configured explicit Transfer Syntax
b) other explicit Transfer Syntax
c) default Transfer Syntax

DAT will not accept duplicate Presentation Contexts, that is, if it is offered three identical Presentation Contexts, each of which offers any of the three acceptable Transfer Syntaxes, it will accept all Presentation Contexts, but with different Transfer Syntaxes in each.

B.3 Communication profiles

B.3.1 *Supported communications stacks (parts 8,9)*

Both DIS and DAT provide DICOM V3.0 TCP/IP Network Communication Support as defined in PS 3.8.

B.3.2 *TCP/IP stack*

DIS and DAT inherit their TCP/IP stack from the UNIX system upon which they execute. DIS and DAT have been implemented on a number of different UNIX systems.

B.3.2.1 PHYSICAL MEDIA SUPPORT

DIS and DAT are indifferent to the physical medium over which TCP/IP executes; they inherit this from the UNIX system upon which they execute.

B.4 Extensions/Specializations/Privatizations

Not Applicable.

B.5 Configuration

DIS and DAT obtain their configuration information from three files in the directory /etc/DICOM:

— entities—provides mapping from Application Entity Title to Presentation Address

— disconfig—provides configuration information for DIS

— datconfig—provides configuration information for DAT

Provided by IHS
No reproduction or networking permitted without license from IHS Not for Resale

B.5.1 *AE title/presentation address mapping*

Each line in the file provides a mapping of an Application Entity Title to a Presentation Address. A Presentation Address consists of a host name and port number. Each line has the following format:

<AE title> <host name> <port number>

The /etc/dicom/entities file is used by DIS to establish associations to remote Application Entities. It is used by DAT to determine the socket number upon which it will wait for connections.

B.5.2 *Configurable parameters*

B.5.2.1 disconfig

The file /etc/DICOM/disconfig specifies the configuration parameters for DIS. The following parameters may be configured for DIS:

— Application Entity Title

— PDU size

Each configuration item is configured with a single line in the configuration file. The format for the Application Entity Title configuration line is:

AE <application title>

Where "AE" is a keyword, and <application title> is an Application Entity Title which must occur in the /etc/DICOM/entities file. Only one such line may appear in disconfig.

The format for the PDU size configuration line is:

PDU <size>

Where "PDU" is a keyword, and <size> is the maximum number of bytes DIS can accept in a PDU. Only one such line may appear in disconfig.

B.5.2.2 datconfig

The file /etc/DICOM/datconfig specifies the configuration parameters for DAT. The following parameters may be configured for DAT:

— Application Entity Title

— PDU size

— Preferred byte order

Provided by IHS
No reproduction or networking permitted without license from IHS Not for Resale

— Directory for Storage of images

— UNIX Application to be invoked for images

The format of the Application Entity Title and PDU size configuration lines are the same as for the disconfig file.

The format of the preferred byte order configuration line is :

BO <BIG | LITTLE>

Where "BO", "BIG", and "LITTLE" are keywords.

The format for the Directory for Storage of images configuration line is:

STORE <SOP Class UID> <directory path>

Where "STORE" is a keyword. This specifies a directory in which all images of the specified SOP Class should be stored. One such configuration line is required for each SOP Class.

The format for the Directory for Storage of images configuration line is:

INVOKE <SOP Class UID> <UNIX command>

Where "INVOKE" is a keyword. This specifies a UNIX command to be invoked when an image of the specified SOP Class is received. One such configuration line may be supplied for each SOP Class. This configuration item is optional.

B.6 Support of extended character sets

Both DIS and DAT are indifferent to Extended Character Sets, as neither application relies on the information contained within the Data Elements.

Provided by IHS
No reproduction or networking permitted without license from IHS Not for Resale

NEMA STANDARDIZATION BACKGROUND

The purpose of NEMA standards, their classification, and status are set forth in certain clauses of the NEMA *Standardization Policies and Procedures* manual and are referenced below:

Purpose of Standards

National Electrical Manufacturers Association Standards are adopted in the public interest and are designed to eliminate misunderstandings between the manufacturer and the purchaser and to assist the purchaser in selecting and obtaining the proper product for their particular needs. Existence of a National Electrical Manufacturers Association Standard does not in any respect preclude any member or nonmember from manufacturing or selling products not conforming to the standard.

Definition of a Standard

A standard of the National Electrical Manufacturers Association defines a product, process, or procedure with reference to one or more of the following: nomenclature, composition, dimensions, tolerances, safety, operating characteristics, performance, rating, testing, and the service for which they are designed.

(Standardization Policies and Procedures, p. 1)

Dimensions

Where dimensions are given for interchangeability purposes, alternate dimensions satisfying the other provisions of the Standards Publication may be capable of otherwise equivalent performance.

(Standardization Policies and Procedures, p. 6)

Categories of Standards

National Electrical Manufacturers Association Standards are of three classes, which have received the affirmative vote of at least two-thirds of the Subdivision votes cast in the affirmative or negative:

1. NEMA Standard, which relates to a product, process, or procedure commercially standardized and subject to repetitive manufacture.
2. Suggested Standard for Future Design, which may not have been regularly applied to a commercial product, but which suggests a sound engineering approach to future development.
3. Adoptive Standard, which is adopted in whole or in part from the standards of another organization, either domestic, regional, or international.

(Standardization Policies and Procedures, pp. 5)

Authorized Engineering Information

Authorized Engineering Information consists of explanatory data and other engineering information of an informative character not falling within the classification of NEMA Standard or Suggested Standard for Future Design, which standard has received the affirmative vote of at least two-thirds of the Subdivision votes cast in the affirmative or negative.

(Standardization Policies and Procedures, pp. 5)

Identification of Status

Standards in NEMA Standards Publications are identified as "NEMA Standard," "Suggested Standard for Future Design," or "Adoptive Standard." These indicate the status of the standard. A statement incorporating the auxiliary verb "shall" indicates that compliance with a requirement is mandatory for compliance with the standard. These classes of standards are identified in the foreword or throughout the text.

The material identified as "Authorized Engineering Information" is designated similarly. Statements incorporating other auxiliary verbs such as "should," "may," etc. refer to the authorized engineering information and not to procedures required for compliance with the standard.

Provided by IHS
No reproduction or networking permitted without license from IHS
Not for Resale

MEDICAL PICTURE ARCHIVING & COMMUNICATION SYSTEM SECTION OF THE NATIONAL ELECTRICAL MANUFACTURERS ASSOCIATION

MEMBER COMPANIES

AGFA Division of Miles Inc
Orangeburg, NY 10962

Camtronics Ltd Medical Systems
Hartland, WI 53029

CEMAX Inc
Fremont, CA 94538

Dejarnette Research Systems
Towson, MD 21204

E I Dupont Denemours & Company Inc
Wilmington, DE 19880-0708

Eastman Kodak Company
Rochester, NY 14653-9014

Eigen
Nevada City, CA 95959

E-Systems Inc
Melpar Division
Falls Church, VA 22046-1571

GE Medical Systems
Milwaukee, WI 53201

InfiMed, Inc.
Liverpool, NY 13088

Merge Technologies Inc
Milwaukee, WI 53214-3151

Oldelft Corporation of America
Fairfax, VA 22031

Philips Medical Systems,
North America Company
Shelton, CT 06484

Picker International, Inc.
Highland Heights, OH 44143

Polaroid Corporation
Cambridge, MA 02139

Siemens Medical Systems, Inc
Iselin, NJ 08830

Siemens Gammasonics, Inc
Hoffman Estates, IL 60195-7372

SMS
Malvern, PA 19355

Sony Medical Systems Division
Park Ridge, NJ 07656

3M
St. Paul, MN 55144

Toshiba America Medical System Inc
Tustin, CA 92680-2068

Vortech Data, Inc
Richardson, TX 75080

Provided by IHS
No reproduction or networking permitted without license from IHS
Not for Resale