PS 3.13-1999 (Substantively Unchanged from Previous Version)

Digital Imaging and Communications in Medicine (DICOM)

Part 13: Print Management Point-to-Point Communication Support

Published by

National Electrical Manufacturers Association
1300 N. 17th Street
Rosslyn, Virginia 22209 USA

© Copyright 1999 by the National Electrical Manufacturers Association. All rights including translation into other languages, reserved under the Universal Copyright Convention, the Berne Convention or the Protection of Literacy and Artistic Works, and the International and Pan American Copyright Conventions.

- Official Standard -

Provided by IHS
No reproduction or networking permitted without license from IHS
Not for Resale

Provided by IHS
No reproduction or networking permitted without license from IHS
Not for Resale

CONTENTS

Clause **Page**

FOREWORD v
1 SCOPE AND FIELD OF APPLICATION 1
2 NORMATIVE REFERENCES 1
3 DEFINITIONS 1
3.1 REFERENCE MODEL DEFINITIONS 1
3.2 ACSE SERVICE DEFINITIONS 2
3.3 DICOM INTRODUCTION AND OVERVIEW DEFINITIONS 2
3.4 DICOM UPPER LAYER SERVICE DEFINITIONS 2
3.5 DICOM MESSAGE EXCHANGE DEFINITIONS 2
3.6 DICOM INFORMATION OBJECT DEFINITIONS 2
3.7 DICOM CONFORMANCE 2
3.8 DICOM SERVICE CLASS DEFINITIONS 2
3.9 DICOM POINT-TO-POINT PRINT MANAGEMENT COMMUNICATIONS SUPPORT DEFINITIONS 3
4 SYMBOLS AND ABBREVIATIONS 3
5 CONVENTIONS 4
5.1 FEATURE USAGE SPECIFICATION 4
6 POINT-TO-POINT PRINT MANAGEMENT COMMUNICATION ARCHITECTURE 5
6.1 POINT-TO-POINT PRINT MANAGEMENT SERVICE CLASS 6
6.2 APPLICATION LAYER 7
6.2.1 Point-to-Point Print Management Application Layer Services 7
6.2.2 Point-to-Point Print Management Application Layer Protocol 7
6.3 CONTROL PATH 7
6.3.1 Control Path Services 7
6.3.2 Control Path Profile 8
6.3.2.1 DICOM Upper Layer Protocol for X3.28 8
6.3.2.2 X3.28 Data Link Layer Protocol 8
6.3.2.3 Physical Layer Protocol 9
6.4 IMAGE PATH 9
Annex A POINT-TO-POINT PRINT MANAGEMENT SERVICE CLASS (Normative) 10
A.1 SCOPE 10
A.2 PRINT MANAGEMENT MODEL 10
A.2.1 Print Management Data Flow Model 10
A.2.1.1 Global Data Flow Model 10
A.2.1.2 Grayscale Transformations 10
A.2.2 Point-to-Point Print Management Service Class Structure 10
A.2.3 Print Management SOP Classes 10
A.2.4 Usage specifications 10
A.3 PRINT MANAGEMENT CONFORMANCE 10
A.3.1 Scope 10
A.3.2 Point-to-Point Print Management Meta SOP Class 11
A.3.2.1 Description 11

--`,,`,`,-`-`,,`,,`,`,,`---

Provided by IHS
No reproduction or networking permitted without license from IHS Not for Resale

A.3.2.2 Point-to-Point Print Management Meta SOP Class Definition 11
A.3.3 Optional SOP Classes 11
A.3.3.1 Description 11
A.3.3.2 List of Optional SOP Classes 11
A.3.4 Conformance Statement 11
A.4 PRINT MANAGEMENT SOP CLASS DEFINITIONS 12
A.4.1 Basic Film Session SOP Class 12
A.4.2 Basic Film Box SOP Class 12
A.4.3 Point-to-Point Image Box SOP Class 12
A.4.3.1 IOD Description 12
A.4.3.2 DIMSE Service Group 12
A.4.3.2.1 N-SET 12
A.4.3.2.1.1 Attributes 12
A.4.3.2.1.1.1 Preformatted Grayscale Image Sequence 13
A.4.3.2.1.2 Status 13
A.4.3.2.1.3 Behavior 13
A.4.3.3 SOP Class Definition and UID 14
A.4.4 Basic Annotation Box SOP Class 14
A.4.5 Print Job SOP Class 14
A.4.6 Printer SOP Class 14
A.5 ASSOCIATION NEGOTIATION 14
Annex B POINT-TO-POINT CONTROL PATH DATA LINK LAYER (Normative) 15
B.1 SCOPE 15
B.2 GENERAL DESCRIPTION 15
B.2.1 Establish X3.28 Connection 15
B.2.2 Transfer X3.28 Message 15
B.2.3 Terminate X3.28 Connection 15
B.3 DATA LINK MESSAGE TRANSFER PROCEDURE DETAILS 15
B.3.1 General Description 15
B.3.2 Transmission Blocks 15
B.3.3 Replies 16
B.3.4 Character Structure of Control Function 16
B.4 DATA LINK LAYER–CYCLIC REDUNDANCY CHECK CRC 16
B.4.1 Definition 16
B.4.2 Function 16
B.4.3 Usage 16
B.5 CONFORMANCE 16
Annex C POINT-TO-POINT CONTROL PATH PHYSICAL LAYER (Normative) 17
C.1 SCOPE 17
C.2 CONFORMANCE STATEMENT 17
C.3 COMMUNICATION VOLTAGE LEVELS 17
C.3.1 RS-232 17
C.3.2 RS-422 17
C.4 MAXIMUM DISTANCE SPECIFICATION 18
C.5 DATA TRANSFER RATE 18
C.6 SIGNAL DEFINITIONS AND DIRECTIONS 18
C.7 CONNECTOR PINOUT 18
C.7.1 DB9 Combined RS-232/RS-422 Pinout 19

Provided by IHS
No reproduction or networking permitted without license from IHS
Not for Resale

C.7.2 DB25 RS-232 Option 19
C.7.3 DB37 RS-422 Option 19
C.8 OPTIONAL +/-12V POWER PINS 20
C.9 OPTIONAL RTS/CTS COMMUNICATION HANDSHAKING PROTOCOL 20
Annex D POINT TO POINT DIGITAL IMAGE PATH LAYER (Normative) 22
D.1 SCOPE 22
D.2 CONFORMANCE STATEMENT 22
D.3 SYMBOL DEFINITIONS 22
D.4 DIGITAL IMAGE PATH PROTOCOL 23
D.4.1 Line Transfer Protocol 23
D.4.2 Header Information 23
D.4.2.1 MT2 Header Block 24
D.4.2.2 MT6 Extended Header Block 24
D.4.2.3 Header Type Compliance 24
D.4.3 Image Composition 25
D.4.4 Data Width 25
D.4.5 Data Transfer 25
D.4.6 Parity 25
D.5 PROTOCOL EXCEPTION AND EXCEPTION HANDLING 26
D.5.1 General description 26
D.5.1.1 Indication of Expectations 26
D.5.1.2 Request Requirement 26
D.5.1.3 Aborted Transfer Recovery 26
D.5.2 Header Transmission Exceptions 27
D.5.2.1 General Description 27
D.5.2.2 Invalid Mode Line 27
D.5.2.3 Invalid Header Length 27
D.5.2.4 Invalid Protocol Values 27
D.5.2.5 Invalid Parity 27
D.5.3 Data Line Exceptions 27
D.5.3.1 Invalid BOM 27
D.5.3.2 Invalid Line 27
D.5.3.3 Invalid Pixels per Line 27
D.5.3.4 Invalid Parity Errors 28
D.5.3.5 Invalid Lines per Image 28
D.6 DIGITAL IMAGE INTERFACE SIGNAL DEFINITIONS 28
D.6.1 Signal Level Definition 28
D.6.2 REQUEST Signal Operation 28
D.6.3 Connector Pinout Assignment 28
D.6.4 Digital Image Cable Requirements 29
D.7 TIMING 30
D.7.1 Timing Diagrams 30
D.7.2 Timing Details 31
Annex E POINT-TO-POINT PRINT MANAGEMENT SERVICE CLASS OVERVIEW (Informative) 33
E.1 SCOPE 33
E.2 SUMMARY 33
E.2.1 Roles of the Devices 33
E.2.2 Information Structure 33
E.2.2.1 Information Needed by the SCP 35

Provided by IHS
No reproduction or networking permitted without license from IHS
Not for Resale

E.2.2.2 Information Needed by the SCU 35
E.3 EXAMPLES OF POSSIBLE FILM SESSIONS 35
E.3.1 Simple Example 35
E.3.1.1 Summary of Simple Example 35
E.3.1.2 Establish the Association 35
E.3.1.3 Create the Film Session 36
E.3.1.4 Create the Film Box 36
E.3.1.5 Acquire Each Image for the Page 37
E.3.1.6 Print the Page 37
E.3.1.7 Printer Film Supply Becomes Low. 37
E.3.1.8 Delete the Film Box 38
E.3.1.9 Create a New Film Box 38
E.3.1.10 Acquire New Images for the New Page 38
E.3.1.11 Print the New Page 38
E.3.1.12 Repeat 38
E.3.2 Options to the Simple Example 38
E.3.2.1 Change the Number of Copies 38
E.3.2.2 Image Stored in Error 38
E.3.2.3 Summary of Simple Example with Options Exercised 38
E.3.3 Embellished Example 40
Annex F INDEX TO ATTRIBUTE TAGS AND UIDs (Informative) 42

Provided by IHS
No reproduction or networking permitted without license from IHS
Not for Resale

FOREWORD

The American College of Radiology ACRand the National Electrical Manufacturers Association NEMA formed a joint committee to develop a standard for Digital Imaging and Communications in Medicine DICOM. This DICOM Standard was developed according to the NEMA procedures.

This Standard is developed in liaison with other standardization organizations including CEN TC251 in Europe and JIRA in Japan, with review also by other organizations including IEEE, HL7 and ANSI in the USA.

The DICOM Standard is structured as a multi-part document using the guidelines established in the following document:

– ISO/IEC Directives, 1989 Part 3 : Drafting and Presentation of International Standards

This document is one part of the DICOM Standard which consists of the following parts:

PS 3.1	Introduction and Overview
PS 3.2	Conformance
PS 3.3	Information Object Definitions
PS 3.4	Service Class Specifications
PS 3.5	Data Structures and Encoding
PS 3.6	Data Dictionary
PS 3.7	Message Exchange
PS 3.8	Network Communication Support for Message Exchange
PS 3.9	Point-to-Point Communication Support for Message Exchange
PS 3.10	Media Storage and File Format for Media Interchange
PS 3.11	Media Storage Application Profiles
PS 3.12	Media Formats and Physical Media for Media Interchange
PS 3.13	Print Management Point-to-Point Communication Support
PS 3.14	Grayscale Display Function Standard

These parts are related but independent documents. Their development level and approval status may differ. Additional parts may be added to this multi-part standard.

Provided by IHS
No reproduction or networking permitted without license from IHS
Not for Resale

--`,,`,`,,`-`-`,,`,,`,`,,`---

Provided by IHS
No reproduction or networking permitted without license from IHS
Not for Resale

1 SCOPE AND FIELD OF APPLICATION

This part specifies the services and protocol necessary to support the communication of DICOM Print Management Application Entities over point-to-point links between print users and print providers.

The Point-to-Point Print Management Communication Support specified in this part of the DICOM standard fits the ISO Open Systems Interconnection Basic Reference Model ISO 7498-1.

The Point-to-Point Communication Profile offers the same upper layer services as the Network Communication Profile, specified in PS 3.8. As a result, similar Print Management Application Entities can be used over a point-to-point link and a network link.

The Point-to-Point Print Management Communication Profile uses lower layer protocols that are compatible with existing hardcopy communication hardware parallel image path, serial control path.

2 NORMATIVE REFERENCES

The following standards contain provisions which, through reference in this text, constitute provisions of this Standard. At the time of publication, the editions indicated were valid. All standards are subject to revision, and parties to agreements based on this Standard are encouraged to investigate the possibilities of applying the most recent editions of the standards indicated below.

ISO 7498-1, Information Processing Systems–Open Systems Interconnection–Basic Reference Model

ISO 8649, Information Processing Systems–Open Systems Interconnection–Service Definition for the Association Control Service Element

ANSI X3.28-1976 R1992, American National Standard Procedures for the Use of the Communication Control characters of American National Standard Code for Information Interchange in Specified Data Communication Links

EIA 232-D, Interface Between Data Terminal Equipment and Data Circuit-Terminating Equipment Employing Serial Binary Data Interchange

EIA RS-422-A, Electrical Characteristics of Balanced Voltage Digital Interface Circuits

3 DEFINITIONS

For the purposes of this Standard the following definitions apply.

3.1 REFERENCE MODEL DEFINITIONS

This Part of the Standard makes use of the following terms defined in ISO 7498-1:

a Application Entity

b Service or Layer Service

c Protocol Data Unit or Layer Protocol Data Unit

Provided by IHS
No reproduction or networking permitted without license from IHS
Not for Resale

3.2 ACSE SERVICE DEFINITIONS

This Part of the Standard makes use of the following terms defined in ISO 8649:

a Association or Application Association

3.3 DICOM INTRODUCTION AND OVERVIEW DEFINITIONS

This Part of the Standard makes use of the following terms defined in PS 3.1:

a Attribute
b Message

3.4 DICOM UPPER LAYER SERVICE DEFINITIONS

This Part of the Standard makes use of the following terms defined in PS 3.8:

a Unique Identifier UID
b DICOM Upper Layer Service

3.5 DICOM MESSAGE EXCHANGE DEFINITIONS

This Part of the Standard makes use of the following terms defined in PS 3.7:

a DICOM Message Service Element DIMSE
b DIMSE-N Services

3.6 DICOM INFORMATION OBJECT DEFINITIONS

This Part of the Standard makes use of the following terms defined in PS 3.3:

a Information Object Definition
b Normalized IOD

3.7 DICOM CONFORMANCE

This Part of the Standard makes use of the following terms defined in PS 3.2:

a Conformance Statement

3.8 DICOM SERVICE CLASS DEFINITIONS

This Part of the Standard makes use of the following terms defined in PS 3.4:

a Meta Service-Object Pair SOP Class
b Service Class User
c Service Class Provider
d Service Class
e Service-Object Pair SOP Class
f Service-Object Pair SOP Instance

--`,,`,,`-`-`,,`,,`,`,,`---

Provided by IHS
No reproduction or networking permitted without license from IHS Not for Resale

3.9 DICOM POINT-TO-POINT PRINT MANAGEMENT COMMUNICATIONS SUPPORT DEFINITIONS

The following definitions are commonly used in this part of the DICOM Standard:

Control Path: Serial connection between host and printer for transmission of printer attributes and image related attributes.

Image Path: Digital parallel connection or video connection between host and printer for transmission of image pixel data.

Control Path Profile: Set of Protocols that are used in conjunction with the Control Path.

Image Path Profile: Set of Protocols that are used in conjunction with the Image Path.

Data Transfer: Data transmitted on each strobe pulse.

Line: Contiguous set of Data Transfers beginning with Message type character and ending with either EOM or EOT character.

Aspect Ratio: The ratio of the width to height of the image pixels is defined to be the same as the ratio of X Aspect to Y Aspect.

4 SYMBOLS AND ABBREVIATIONS

The following symbols and abbreviations are used in this Part of the DICOM Standard.

##H	Denotes hexadecimal number e.g. FFH
ACR	American College of Radiology
AE	Application Entity
ANSI	American National Standards Institute
ASCII	American Standard Code for Information Interchange
BOM	Beginning of Message character
CEN TC251	Comité Européen de Normalisation - Technical Committee 251 - Medical Informatics
CRC	Cyclic Redundancy Check
DCE	Data Circuit-Terminating Equipment
DEOT	Mandatory Disconnect
DICOM	Digital Imaging and Communications in Medicine
DIMSE	DICOM Message Service Element
DIMSE-N	DICOM Message Service Element-Normalized
DTE	Data Terminal Equipment
EIA	Electronic Industries Association
EOM	End of Message character
EOT	End of Transmission character

Provided by IHS
No reproduction or networking permitted without license from IHS
Not for Resale

HL7	Health Level 7
IEEE	Institute of Electrical and Electronics Engineers
IOD	Information Object Definition
ISO	International Standards Organization
JIRA	Japan Industries Association of Radiation Apparatus
LSB	Least Significant Byte
MSB	Most Significant Byte
MT2	Standard Header Message Type character
MT3	Data Message Type character
MT6	Extended Header Message Type character
MTn	General Header Type reference indicating MT2 or MT6
NEMA	National Electrical Manufacturers Association
OSI	Open Systems Interconnection
PDU	Protocol Data Unit
SCP	Service Class Provider
SCU	Service Class User
SOP	Service-Object Pair
TCP/IP	Transmission Control Protocol/Internet Protocol
UID	Unique Identifier

5 CONVENTIONS

5.1 FEATURE USAGE SPECIFICATION

The usage of various features of Point-to-Point Communication Support may be mandatory M or optional U. The usage may be different for the SCU and SCP. The usage is specified as a pair of letters: the former indicating the SCU usage, the latter indicating the SCP usage.

The meaning and behavior of the feature usage specifications are:

M/M	The SCU shall support the feature but is not required to use it on an Association. The SCP shall support the feature
U/M	The SCU may support and use the feature. The SCP shall support the feature.
U/U	The SCU may support and use the feature. SCP may support the feature. If the SCP does not support the feature used by the SCU, it shall return a FAILURE status.

Provided by IHS
No reproduction or networking permitted without license from IHS
Not for Resale

6 POINT-TO-POINT PRINT MANAGEMENT COMMUNICATION ARCHITECTURE

Figure 6-1 illustrates the layers for print management point-to-point communication support and how they relate to the other layers supporting DICOM communications.

Point-to-Point Print Management Communication Support consists of a Point-to-Point Print Management Service Class, a single Application Layer, and a twin-profile for the remaining layers. The twin-profile consists of a Control Path Profile and an Image Path Profile.

There shall be exactly one Image Path with each Control Path. The Control Path handles the transmission of the print attributes and the other image related attributes and is patterned after the OSI Reference Model. The Image Path handles the transmission of the pixel data and certain basic attributes of an image.

Note: Whether the Image Path is controlled by the Medical Imaging Application or the DICOM Application Message Exchange layer is implementation dependent. This is reflected in Figure 6-1 by not having the DICOM Application Message Exchange layer completely cover the Image Path layers.

An informative overview of Point-to-Point Print Management appears in Annex E.

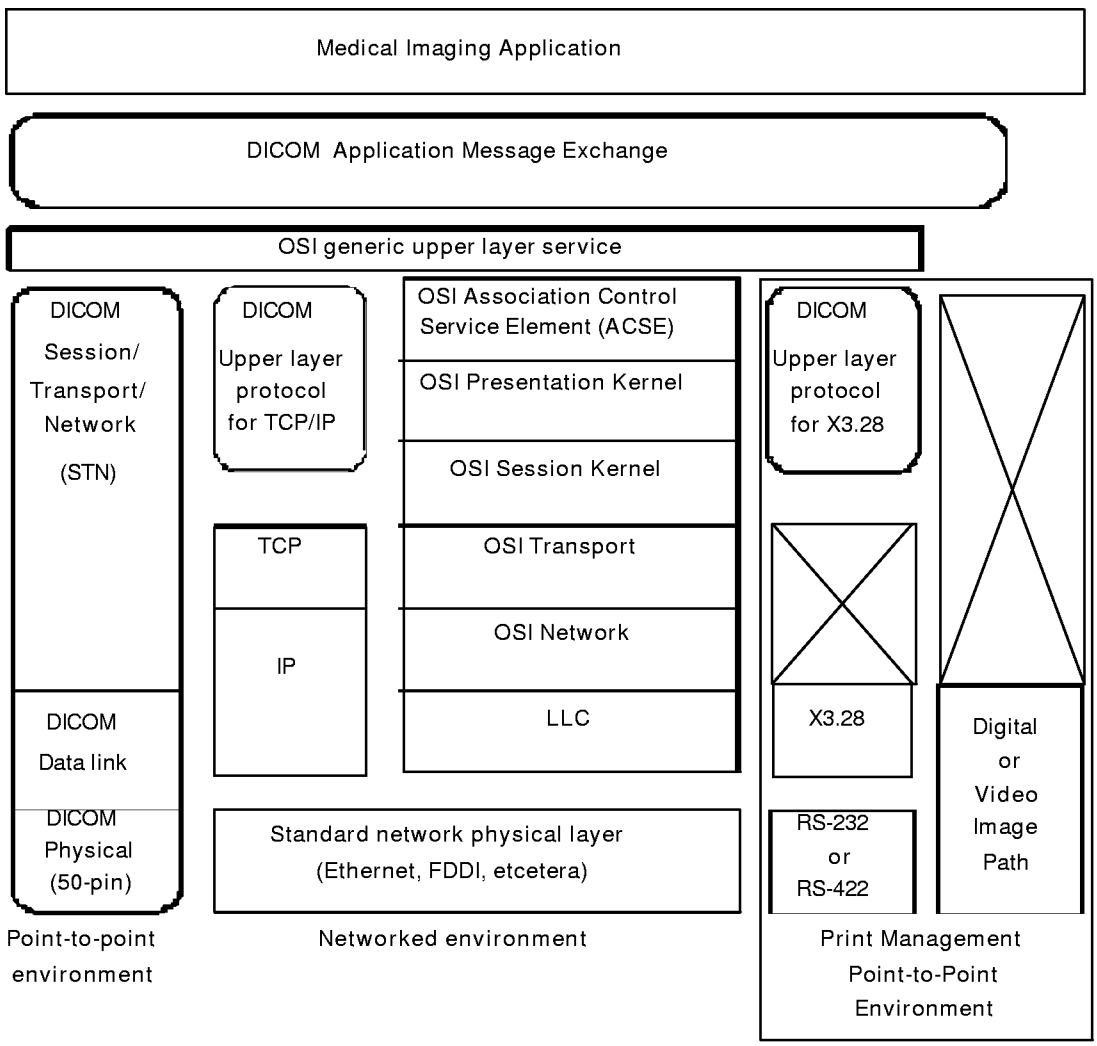

Provided by IHS
No reproduction or networking permitted without license from IHS
Not for Resale

Figure 6-1
DICOM PROTOCOL ARCHITECTURE

6.1 POINT-TO-POINT PRINT MANAGEMENT SERVICE CLASS

The Point-to-Point Print Management Service Class is specified in Annex A. It includes the Point-to-Point Print Management Communication Support Meta SOP Class which is a specialization of the Basic Grayscale Print Management Meta SOP Class defined in PS 3.4. The main change is the use of the Point-to-Point Image Box SOP Class in place of the Basic Image Box SOP Class, and that no overlays are allowed.

The Point-to-Point Image Box SOP Class is a specialization of the Basic Image Box SOP Class where pixel data and certain pixel related data i.e., what would be transmitted in the Attribute Preformatted Grayscale Image Sequence (2020,0110 of the Basic Grayscale Image Box SOP Class is captured by the printer over a separate Image Path rather than being transmitted with the SOP Instance data over the Data Path.

Provided by IHS
No reproduction or networking permitted without license from IHS
Not for Resale

6.2 APPLICATION LAYER

The Application Layer Services and protocols are the same as the DICOM DIMSE/ACSE services specified in PS 3.7. As a result, similar Print Management Application Entities may be used with both the DICOM TCP/IP communication profile and the DICOM Point-to-Point Print Management communication profile. The primary difference between these two communications profiles is that the DICOM Point-to-Point Print Management communication profile transmits the image data over a path separate from the SOP Instance.

6.2.1 Point-to-Point Print Management Application Layer Services

The Point-to-Point Print Management Application Layer Services are the set of Services that the Application Layer offers to the Print Management Application Entity in order to manipulate the Point-to-Point Print Management SOP Classes/Instances.

The Point-to-Point Print Management Application Layer Services only offers the following subset of the DIMSE-N Services :

a N-CREATE
b N-DELETE
c N-SET
d N-ACTION
e N-EVENT-REPORT

These DIMSE-N Services are described in PS 3.7.

6.2.2 Point-to-Point Print Management Application Layer Protocol

In general, the DIMSE-N Services are implemented by the DIMSE-N protocol, as described in PS 3.7. The DIMSE-N protocol uses the Services of the Control Link Profile, described in section 6.3.

Since the image data is transferred over a different path than the SOP Instance data, the behavior of the SCU and SCP during an N-SET operation involving image data is as follows:

a The SCU shall insure that the image data is available on the Image Path before the SCP receives the N-SET-IND.
b The SCP shall acquire the image from the Image Path before returning an N-SET-RSP with a success status to the SCU.
c The SCU shall not remove the image data from the Image Path before receiving the N-SET-CNF.

6.3 CONTROL PATH

The Control Path defines the set of Services and Protocols that are offered to the Point-to-Point Print Management Application Layer in order to transmit print attributes and image related attributes over a serial line.

6.3.1 Control Path Services

The Control Path Services are used by peer Print Management Application Entities to establish an Association between themselves and to transfer DIMSE-N Messages across the Association. The Control Path offers the following subset of the DICOM Upper Layer Service Primitives described in PS 3.8:

a A-ASSOCIATE
b A-RELEASE
c A-ABORT

--`,,`,,`-`-`,,`,,`,`,,`---

Provided by IHS
No reproduction or networking permitted without license from IHS Not for Resale

d P-DATA

The Point-to-Point Print Management AE shall only establish one Association per Control Path at a time.

Note: Because of the serial line connection, there exists a 1-to-1 relation between the peer Point-to-Point Print Management Application Entities. As a result the parameters “Calling AE Title,” “Called AE Title,” “Calling Presentation Address” and “Called Presentation Address” may be filled in with blanks.

6.3.2 Control Path Profile

The Control Path Profile specifies the set of Presentation/Session Layer protocols, Data Link Layer protocols and Physical Layer protocols to provide the Control Path Services as defined in previous section. The specification of such a profile is necessary to ensure interoperability of implementations.

The Control Path Profile consists of the following communication protocols:

a Presentation/Session Layer: DICOM Upper Layer Protocol for X3.28
b Data Link Layer: X3.28 protocol See Annex B
c Physical Layer: RS232/RS422 serial line See Annex C

Note: Since the connection is point-to-point, no Network/Transport Layer protocols are needed.

6.3.2.1 DICOM Upper Layer Protocol for X3.28

The "DICOM Upper Layer Protocol for X3.28" is an adaptation of the "DICOM Upper Layer Protocol for TCP/IP", described in part 8 of the DICOM Standard, so that it can be used in conjunction with the X3.28 Data Link Layer protocol.

As with TCP/IP, the Services provided by the X3.28 Data Link Layer are not formally documented. However, the needed services can be inferred from the X3.28 document.

The "DICOM Upper Layer Protocol for X3.28" can be derived from the "DICOM Upper Layer Protocol for TCP/IP" described in PS 3.8 by substituting X3.28 concepts for the TCP/IP specific concepts used in PS 3.8 as follows:

TCP/IP concept	Equivalent X3.28 concept
TCP	X3.28
TCP/IP	X3.28
TCP/IP Transport Layer	X3.28 Data Link Layer
TCP Transport Services	services of the X3.28 Data Link Layer
TCP Transport Connection	the Control Path
TRANSPORT CONNECT	not needed, as the point to point link is always connected
PDU transmission	Establish X3.28 connection, Transfer X3.28 message, then Terminate X3.28 connection
Close TCP connection	not needed

6.3.2.2 X3.28 Data Link Layer Protocol

The X3.28 Data Link Layer protocol is a connection oriented and confirmed protocol and is described in document " X3.28-1976 American National Standard Procedures for the Use of the Communication Control Characters of American National Standard Code for Information Interchange in Specified Data

--`,,`,`,-`-`,,`,,`,`,,`---

Provided by IHS
No reproduction or networking permitted without license from IHS Not for Resale

Communication Links". The X3.28 Data Link Layer protocol is used to establish connections between two peer stations for transferring messages between the two stations.

The X3.28 protocol description uses a different nomenclature than DICOM. The relation between DICOM terminology and X3.28 terminology is described in the following table:

DICOM term	X3.28 term
Application Entity	Station
PDU	Message

The subset of the X3.28 Data Link Layer protocol that is used within the scope of this Standard is specified in Annex B.

6.3.2.3 Physical Layer Protocol

The Physical Layer protocol is used to transfer a bit stream over a serial line between two stations.

The Physical Layer protocol is described in Annex C.

6.4 IMAGE PATH

The Image Path Profile defines the mechanism by which the Point-to-Point Print Management Service Class transmits image data from an SCU to an SCP.

The Image Path Profile consists of the following components:

a Presentation/Session/Transport/Network layer: empty functionality is already covered by Control Link Profile

b Data Link/Physical Layer: Digital Image Path or Video Image Path

The Digital Image Path is described in Annex D.

The description of the various video standards falls beyond the scope of the DICOM Standard.

The Conformance Statement shall specify whether the digital or video Image Path are available.

Provided by IHS
No reproduction or networking permitted without license from IHS
Not for Resale

Annex A POINT-TO-POINT PRINT MANAGEMENT SERVICE CLASS (Normative)

A.1 SCOPE

The Point-to-Point Print Management Service Class defines an application-level class-of-service which facilitates the printing of images and image related data on a hard copy medium. It is a specialization of a subset of the Print Management Service Class defined in PS 3.4.

A.2 PRINT MANAGEMENT MODEL

A.2.1 Print Management Data Flow Model

A.2.1.1 Global Data Flow Model

The Global Data Flow Model is the same as specified in PS 3.4 with the exception that each image consists of pixel data, but no overlay planes.

A.2.1.2 Grayscale Transformations

Grayscale transformations are not supported.

A.2.2 Point-to-Point Print Management Service Class Structure

The Point-to-Point Print Management SCU and SCP are the peer DICOM Print Management Application Entities. The Application Entity of the SCP corresponds with one or more hard copy printers.

If the SCP Application Entity corresponds with multiple printers then the SCP Application Entity selects the printer where each print job will be printed. In this case, the SCU has no control over the print parameters of each printer and over the print destination of the print job.

The SCU and SCP establish an Association by using the Association Services of the OSI Upper Layer Service. During Association establishment, the DICOM Print Management Application Entities negotiate the supported SOP Classes. The negotiation procedure is defined in Section A.5.

The SCU and SCP shall establish a single Association per Control Path at a time.

A.2.3 Print Management SOP Classes

Point-to-Point Print Management SOP Classes are classified as specified in PS 3.4.

A.2.4 Usage specifications

Usage specifications are the same as specified in PS 3.4.

A.3 PRINT MANAGEMENT CONFORMANCE

A.3.1 Scope

There is a single Point-to-Point Print Management Meta SOP Class which is required for all implementations. It is a specialization of the Basic Print Management Meta SOP Classes defined in PS 3.4.

In addition, optional SOP Classes may be supported.

Provided by IHS
No reproduction or networking permitted without license from IHS
Not for Resale

A.3.2 Point-to-Point Print Management Meta SOP Class

A.3.2.1 Description

The Point-to-Point Print Management Meta SOP Class corresponds with the minimum functionality that an implementation shall support. It supports the following mandatory features:

a preformatted images (images where annotation, graphics, overlays are burned in
b pre-defined film layouts image display formats
c basic presentation parameters on film session, film box and image box level
d basic device management.

A.3.2.2 Point-to-Point Print Management Meta SOP Class Definition

The Meta SOP Class is defined by the following set of supported SOP Classes.

SOP Class Name	Reference	Usage SCU/SCP
Basic Film Session SOP Class	A.4.1	M/M
Basic Film Box SOP Class	A.4.2	M/M
Point-to-Point Image Box SOP Class	A.4.3	M/M
Printer SOP Class	A.4.6	M/M

The meaning of the Usage SCU/SCP is described in Section A.2.4.

The Point-to-Point Print Management Meta SOP Class UID has the value “1.2.840.10008.5.1.1.9.271".

A.3.3 Optional SOP Classes

A.3.3.1 Description

The optional SOP Classes add functionality. One or more optional SOP Classes may be used in addition to the Point-to-Point Print Management Meta SOP Class.

The following functionality is supported by the optional SOP Classes:

a annotation

b tracking the status of the print session

A.3.3.2 List of Optional SOP Classes

The following optional SOP Classes may be used in conjunction with the Point-to-Point Print Management Meta SOP Class:

SOP Class Name	Reference	Usage SCU/SCP
Basic Annotation Box SOP Class	A.4.4	U/U
Print Job SOP Class	A.4.5	U/U

A.3.4 Conformance Statement

The implementation Conformance Statement of these SOP Classes shall follow PS 3.2 with the exception that the SCP and SCU are not required to specify the maximum number of supported Associations at the same time. This is because only one Association is permitted at a time per physical interface.

Provided by IHS
No reproduction or networking permitted without license from IHS
Not for Resale

A.4 PRINT MANAGEMENT SOP CLASS DEFINITIONS

A.4.1 Basic Film Session SOP Class

This SOP Class is the same as specified in PS 3.4.

A.4.2 Basic Film Box SOP Class

This SOP Class is the same as the Basic Film Box SOP Class specified in PS 3.4.

Creation of Basic Film Box SOP Instances instructs the SCP to create Image Box SOP Instances of the appropriate class. For the Point-to-Point Print Management Meta SOP Class, the appropriate Image Box Class is the Point-to-Point Image Box SOP Class.

A.4.3 Point-to-Point Image Box SOP Class

A.4.3.1 IOD Description

The IOD in this SOP is the Image Box IOD, which is an abstraction of the presentation of an image and image related data. It describes the presentation parameters which apply to a single image on a sheet of film.

The Image Box IOD is described in PS 3.3.

A.4.3.2 DIMSE Service Group

The following DIMSE Service is applicable to the IOD:

DIMSE Service Element	Usage SCU/SCP
N-SET	M/M

The meaning of the Usage SCU/SCP is described in Section A.2.4.

Note: There is no N-CREATE because Instances of the Point-to-Point Image Box SOP Class are created by the SCP as a result of the N-CREATE of the Film Box SOP Instance.

This Section describes the behavior of the DIMSE Services which are specific for this IOD. The general behavior of the DIMSE services is specified in PS 3.7.

A.4.3.2.1 N-SET

The N-SET may be used to update an instance of the Point-to-Point Image Box SOP Class.

A.4.3.2.1.1 Attributes

The following Attributes may be updated:

Attribute Name	Tag	Usage SCU/SCP
Image Position	(2020,0010)	M/M
Preformatted Grayscale Image Sequence	(2020,0110)	MC/M See Section A.4.3.2.1.1.1
>Pixel Aspect Ratio	(0028,0034)	MC/M See Section A.4.3.2.1.1.1
Polarity	(2020,0020)	U/M
Magnification Type	(2010,0060)	U/U

Provided by IHS
No reproduction or networking permitted without license from IHS
Not for Resale

Smoothing Type	(2010,0080)	U/U
Requested Image Size	(2020,0030)	U/U

The meaning of the Usage SCU/SCP is described in Section A.2.4.

The values of Magnification Type (2010,0060) and Smoothing Type (2010,0080) of a particular image box override the values of Magnification Type and Smoothing Type of the film box.

A.4.3.2.1.1.1 Preformatted Grayscale Image Sequence

The semantics of Preformatted Grayscale Image Sequence (2020,0110) depend on the following three conditions:

a If the SCU wishes the SCP to acquire the image pixel data on the Image Path and inform the SCP of the pixel Aspect Ratio on the Control Path, Preformatted Grayscale Image Sequence (2020,0110) shall be present with the appropriate pixel Aspect Ratio. Any Aspect Ratio associated with the Image Path, such as the Aspect Ratio specified by an MT6 Extended Header over a digital Image Path, shall take precedence over any Aspect Ratio specified on the Control Path.

b If the SCU wishes the SCP to acquire the image pixel data on the Image Path and not inform the SCP of the pixel Aspect Ratio on the Control Path, Preformatted Grayscale Image Sequence (2020,0110) shall be absent from the Message.

c If the SCU wishes the SCP to erase the image, Preformatted Grayscale Image Sequence (2020,0110) shall be present with a zero length value.

Note: Preformatted Grayscale Image Sequence (2020,0110) is used in the Basic Grayscale Image Box SOP Class see PS 3.4 to convey the image pixel data. In the Point-to-Point Image Box SOP Class pixel data are never contained in this Attribute.

A.4.3.2.1.2 Status

The status values which are specific for this SOP Class are defined as follows:

Status	Meaning	Code
Failure	Insufficient memory in printer to store the image	C605

A.4.3.2.1.3 Behavior

The SCU uses the N-SET to request the SCP to update a Point-to-Point Image Box SOP Instance. The SCU shall only specify the SOP Instance UID of a Point-to-Point Image Box belonging to the last created Film Box SOP Instance and shall specify the list of Attributes for which the Attribute values are to be set.

The SCU shall make the image pixel data available on the Image Path Physical Layer prior to issuing the N-SET command.

If Preformatted Grayscale Image Sequence (2020,0110) is absent or present with a non-zero value, the SCP shall acquire the image pixel data over the Image Link Physical Layer after receiving the N-SET command.

If Preformatted Grayscale Image Sequence (2020,0110) is present with zero value, the SCP shall erase the image in Image Position (2020,0010).

The SCP shall set new values for the specified Attributes of the specified SOP Instance.

The SCP shall return the status code of the requested SOP Instance update.

Provided by IHS
No reproduction or networking permitted without license from IHS
Not for Resale

A Failure status code shall indicate that the SCP has not updated the SOP Instance. A WARNING status shall indicate that the SCP is not capable of performing the operation in the specified way. The exact behavior of the SCP is described in the Conformance Statement.

A.4.3.3 SOP Class Definition and UID

The Point-to-Point Image Box SOP Class UID shall have the value "1.2.840.10008.5.1.1.4.271".

A.4.4 Basic Annotation Box SOP Class

The Basic Annotation Box SOP Class is the same as defined in PS 3.4.

A.4.5 Print Job SOP Class

The Print Job SOP Class is the same as defined in PS 3.4.

A.4.6 Printer SOP Class

The Printer SOP Class is the same as defined in PS 3.4.

A.5 ASSOCIATION NEGOTIATION

Association negotiation is as specified in PS 3.4 with the exception that only the Point-to-Point Meta SOP Class is supported.

--`,,`,`,-`-`,,`,,`,`,,`---

Provided by IHS
No reproduction or networking permitted without license from IHS
Not for Resale

Annex B POINT-TO-POINT CONTROL PATH DATA LINK LAYER (Normative)

B.1 SCOPE

The data link layer is specified by the ANSI X3.28-1976 standard. This Annex indicates the specific sections of the ANSI standard to apply and gives clarification notes where necessary.

Refer to X3.28-5.5 "Subcategory 2.3: Two-Way Alternate, Nonswitched , Point-to-Point."

B.2 GENERAL DESCRIPTION

The Point-to-Point Control Path Data Link Layer utilizes the ANSI X3.28 Subcategory 2.3 specification.

Refer to X3.28-5.5.1 "General Description."

Both the SCU and SCP shall be capable of being either master or slave depending on which device initiates a message. The connection shall be terminated after each message.

B.2.1 Establish X3.28 Connection

Establishment refers to the creation of the communication link between two stations physically connected by a serial line. The establishment brings the stations to the state at which they can begin transmitting framed messages.

Refer to X3.28 - 5.5.2 "Establishment."

B.2.2 Transfer X3.28 Message

Message Transfer refers to the exchange of information between previously connected stations. The sending station shall frame each block between control characters. The receiving station shall reply to each frame by control character.

Refer to X3.28 - 5.5.3 "Message Transfer."

Message Category D1 shall be used. More details are specified in Section B.3 of this Annex.

B.2.3 Terminate X3.28 Connection

Termination refers to the disconnection of the serial communication link.

Refer to X3.28 - 5.5.4 "Termination."

DEOT shall not be used.

B.3 DATA LINK MESSAGE TRANSFER PROCEDURE DETAILS

Refer to X3.28 - 6.10 "Subcategory D1: Message Independent Blocking with Cyclic Checking, Alternating Acknowledgments, and Transparent Heading and Text."

B.3.1 General Description

Refer to X3.28 - 6.10.1 "General Description."

B.3.2 Transmission Blocks

Refer to X3.28 - 6.10.2 "Transmission Blocks."

Provided by IHS
No reproduction or networking permitted without license from IHS
Not for Resale

Message headings shall not be used. Transmissions beginning with DLE SOH shall not be used.

The sender shall be able to transmit messages using block sizes not exceeding 256 bytes in length. The receiver shall be able to receive blocks of at least 256 bytes in length. An SCU/SCP pair may transmit blocks greater than 256 bytes in length if supported by both sides. If the length of a message exceeds the maximum block size for the SCU/SCP pair, the Data Link layer shall transmit the message as consecutive blocks.

B.3.3 Replies

Refer to X3.28 - 6.10.3 "Replies."

B.3.4 Character Structure of Control Function

Refer to X3.28 - 6.10.4 "Character Structure of Control Function."

B.4 DATA LINK LAYER–CYCLIC REDUNDANCY CHECK CRC

Refer to X3.28 - 4.3.2 "CRC Cyclic Redundancy Check."

B.4.1 Definition

Refer to X3.28 - 4.3.2.1 "Definition."

The degree of the generator polynomial shall be 16, and the CCITT polynomial shall be used.

B.4.2 Function

Refer to X3.28 - 4.3.2.2 "Function."

B.4.3 Usage

Refer to X3.28 - 4.3.2.3 "Usage."

B.5 CONFORMANCE

The implementation Conformance Statement shall follow PS 3.2.

The SCU and SCP Conformance Statement shall specify the following: maximum message transfer block size supported.

Provided by IHS
No reproduction or networking permitted without license from IHS
Not for Resale

Annex C POINT-TO-POINT CONTROL PATH PHYSICAL LAYER (Normative)

C.1 SCOPE

This Annex specifies the Control Path physical layer. It covers only the control physical layer and does not address any application level or image transfer level discussions.

This Annex specifies the details of the communication link for the voltage levels, maximum distances, baud rate and cable pinouts.

C.2 CONFORMANCE STATEMENT

The implementation Conformance Statement shall follow PS 3.2.

The SCU and SCP Conformance Statement shall specify the following items:

a connector size used DB9, DB25 or DB37
b connector type used plug or receptacle
c pinouts follow tables in section C.7
d presence or absence of power pins +/- 12V pins
e whether RTS/CTS handshaking is supported.

In addition, the SCU Conformance Statement shall specify the communication protocol supported RS-232, RS-422 or both.

C.3 COMMUNICATION VOLTAGE LEVELS

Voltage levels from two communication standards are supported: RS-232 and RS-422. In both cases, the usage of these standards is limited to the voltage levels cited. The signal usage and pinouts specified by this document are not necessarily in compliance with these general standards.

The SCU may choose the implementation most appropriate to its application, but shall support at least one of these standards. The SCP shall support both. This is summarized by the following table:

Voltage Level	SCU/SCP Usage
RS-232	U/M
RS-422	U/M

Only one of these voltage levels shall be active at one time for an SCU/SCP pair.

C.3.1 RS-232

A logic high 1 is present when the signal is in the RS-232 marking condition more negative than -3V. Marking voltages shall be limited to the range: -3V to -15V. A logic low 0 is present when the signal is in the RS-232 spacing condition more positive than 3V. Spacing voltages shall be limited to the range 3V to 15V.

C.3.2 RS-422

A logic high 1 is present when the side of a signal is higher than the side of the signal. A logic low 0 is present when the side is higher than the side.

Provided by IHS
No reproduction or networking permitted without license from IHS
Not for Resale

C.4 MAXIMUM DISTANCE SPECIFICATION

The following table summarizes the maximum distances specified for the above RS-232 and RS-422 implementations:

Voltage Level	Maximum Cable Length
RS-232	15m see Note 1
RS-422	1 km see Notes 2 and 3

Notes: 1. Longer cables may be used providing that the resulting load capacitance does not exceed 2500 pF.

2. Assuming that 24 AWG Copper twisted pair is used and that capacitance across each pair is less than 52.5 pF/m with 100 ohm termination.

3. For opto-isolated inputs, this distance is reduced to 60 m.

C.5 DATA TRANSFER RATE

The following table specifies the data transfer rate support required:

Baud Rate	SCU/SCP Usage
1200	U/M
2400	U/M
4800	U/M
9600	U/M
14,400	U/U
19,200	U/U

SCUs shall support at least one of 1200, 2400, 4800 or 9600 baud rates.

C.6 SIGNAL DEFINITIONS AND DIRECTIONS

The following defines the signals and their directions used in the communication link:

Signal	Direction	SCU/SCP Usage
TxD	SCP --> SCU	U/M
RxD	SCP <-- SCU	U/M
TxD+/TxD-	SCP <-- SCU	U/M
RxD+/RxD-	SCP --> SCU	U/M

C.7 CONNECTOR PINOUT

The DICOM Standard does not require any specific connector and pinout to be implemented. This allows support for existing hardware in the marketplace.

The following sections describe the recommended pinouts for implementing these protocols on DB9, DB25 or DB37 connectors. These recommendations are made to simplify cabling options required to mate SCU and SCP devices.

Provided by IHS
No reproduction or networking permitted without license from IHS
Not for Resale

The DB9 receptacle is recommended for both the SCP and SCU.

Frame ground shall be connected from chassis to shell of connector . The frame ground shall not be connected to any of the connector pins in compliance with international regulations e.g., EM 55022 and IEC 801-4.

C.7.1 DB9 Combined RS-232/RS-422 Pinout

This connector accommodates both RS-232 and RS-422 implementations.

Pin	Signal
1	RS-232 Signal Ground
2	RS-422 RxD+
3	RS-422 TxD+
4	RS-232 Tx
5	
6	RS-232 Rx
7	RS-422 RxD-
8	RS-422 TxD+
9	

Note: Signal ground is not used for RS-422 communication.

C.7.2 DB25 RS-232 Option

This connector provides support for RS-232 levels only.

Pin	Signal	Pin	Signal
1		14	
2	TxD	15	
3	RxD	16	
4		17	
5		18	
6		19	
7	Signal Ground	20	
8		21	
9		22	
10		23	
11		24	
12		25	
13			

C.7.3 DB37 RS-422 Option

This connector supports RS-422 levels only.

Provided by IHS
No reproduction or networking permitted without license from IHS
Not for Resale

Pin	Signal	Pin	Signal
1		20	TxD+
2	TxD-	21	RxD+
3	RxD-	22	
4		23	
5		24	
6		25	
7		26	
8		27	
9		28	
10		29	
11		30	
12		31	
13		32	
14		33	
15		34	
16		35	
17		36	
18		37	
19			

C.8 OPTIONAL +/-12V POWER PINS

Optional +/- 12V pins may be implemented on the RS-232 pinouts to facilitate the use of commercially available fiber optic converters.

For safety reasons, a single pinout is specified for each connector.

If a DB9 connector is used, the power pins shall occupy the following pins:

Pin	Signal
5	+12V (100mA)
9	-12V (60mA)

If a DB25 connector is used, the power pins shall occupy the following pins:

Pin	Signal
18	+12V (100mA)
25	-12V (60mA)

C.9 OPTIONAL RTS/CTS COMMUNICATION HANDSHAKING PROTOCOL

The use of the RTS/CTS Handshaking protocol is not required by this standard but may be optionally implemented. Regardless, the SCU shall not depend on the SCP implementing RTS/CTS handshaking. To

Provided by IHS
No reproduction or networking permitted without license from IHS
Not for Resale

implement RTS/CTS handshaking, refer to the EIA-232-D document for a more detailed discussion. When referring to the EIA-232-D document, note that the SCU is DTE and that the SCP is DCE.

RTS/CTS Support	SCU/SCP Usage
RTS/CTS Handshaking Supported	U/U

If implemented, the following table summarizes the RTS/CTS signal description:

Signal	Description
RTS/CTS	RS-232 Handshaking signals. RTS is received BY the SCP. CTS is transmitted *from* the SCP.
RTS+/RTS- CTS+/CTS-	RS-422 Handshaking differential signals. RTS is received BY the SCP. CTS is transmitted *from* the SCP.

The recommended DB9 pinout is:

Pin	Signal
5	RS-232 RTS
9	RS-232 CTS

Note: RS-422 RTS/CTS not supported on DB9 pinout.

The recommended DB25 pinout is:

Pin	Signal
4	RS-232 RTS
5	RS-232 CTS

The recommended DB37 pinout is:

Pin	Signal
4	RS-422 RTS-
5	RS-422 CTS-
22	RS-422 RTS+
23	RS-422 CTS+

Provided by IHS
No reproduction or networking permitted without license from IHS
Not for Resale

Annex D POINT TO POINT DIGITAL IMAGE PATH LAYER (Normative)

D.1 SCOPE

This Annex specifies the digital Image Path layers. It covers only the digital Image Path interface. It does not address the video Image Path which is discussed in Section 6.4.

This Annex specifies the details of the digital image transfer protocol as well as the physical layer signal levels, pinout assignments, cabling requirements and the timing relationships required for the digital image interface.

D.2 CONFORMANCE STATEMENT

The implementation Conformance Statement shall follow PS 3.2.

The SCU Conformance Statement shall specify the following items:

a maximum data transfer rate
b header types supported
c parity support odd, even or none
d number of data transfer retransmits if configurable, state range

The SCP Conformance Statement shall specify the following items:

a maximum data transfer rate
b header types supported
c maximum number of pixels/line allowed for an image
d number of data transfer retransmits if configurable, state range
e if implemented, the total image transfer timeout value or range supported

D.3 SYMBOL DEFINITIONS

The following table defines the values of the symbols used throughout this Annex:

Symbol	Description	Value
BOM	Beginning of Message character	FFH
EOM	End of Message character	00H
EOT	End of Transmission character	01H
MT2	Standard Header Message Type character	02H
MT3	Data Message Type character	03H
MT6	Extended Header Message Type character	06H

These values are also accompanied with the MODE line asserted high.

Provided by IHS
No reproduction or networking permitted without license from IHS
Not for Resale

D.4 DIGITAL IMAGE PATH PROTOCOL

This specification describes the protocol for transferring digital images from the SCU to the SCP. Only one type of image transfer protocol is supported, the Line transfer protocol.

D.4.1 Line Transfer Protocol

In Line transfer operation, data is transmitted from the SCU to the SCP one Line at a time.

This transfer protocol is described below from the viewpoint of an SCU. Three unique transmissions exist in this mode: sending the header Line, sending an image Line, and sending the last image Line.

To send header information when the SCU sees REQUEST go active:

a Send BOM character Set data lines to FFH and MODE=1
b Send MTn Header character Set data lines to 0nH and MODE=1
c Send MSB of pixels/row with MODE=0
d Send LSB of pixels/row with MODE=0
e Send MSB of number of rows/image with MODE=0
f Send LSB of number of rows/image with MODE=0
g Send additional bytes needed for optional MT6 Header Type with MODE=0
h Send EOM character Set data lines to 00H and MODE=1

To send image data Lines except the last Line when the SCU sees REQUEST go active:

a Send BOM character Set data lines to FFH and MODE=1
b Send MT3 character Set data lines to 03H and MODE=1
c Send all pixels in one row with MODE=0
d Send EOM character Set data lines to 00H and MODE=1

To send the last Line in the image when the SCU sees REQUEST go active:

a Send BOM character Set data lines to FFH and MODE=1
b Send MT3 character Set data lines to 03H and MODE=1
c Send all pixels in one row with MODE=0
d Send EOT character Set data lines to 01H and MODE=1

D.4.2 Header Information

Image size information is transmitted ahead of the image data to tell the SCP the size of the forthcoming image.

The header is transmitted as if it were a regular image Line sent just prior to the image data. For an N line image there are N+1 requests.

Two header types are specified in this document, the standard header block MT2, and the extended header block MT6. The extended header block allows image Aspect Ratio information to be included along with the image size. Regardless of the use of two header types, no requirement is made as to the pixel Aspect Ratio of MT2 based images.

--`,,`,,`-`-`,,`,,`,`,,`---

Provided by IHS
No reproduction or networking permitted without license from IHS
Not for Resale

D.4.2.1 MT2 Header Block

The MT2 header block instructs the SCP of the size of the image being transferred. No assumptions are made as to the Aspect Ratio. The image size is described in terms of its horizontal and vertical components.

Byte	Value
1	BOM
2	MT2
3	Horizontal Pixels/Row MSB
4	Horizontal Pixels/Row LSB
5	Vertical Rows/Image MSB
6	Vertical Rows/Image LSB
7	EOM

D.4.2.2 MT6 Extended Header Block

The MT6 extended header block provides pixel Aspect Ratio, in addition to the image size information described in the MT2 header block.

Byte	Value
1	BOM
2	MT6
3	Horizontal Pixels/Row MSB
4	Horizontal Pixels/Row LSB
5	Vertical Rows/Image MSB
6	Vertical Rows/Image LSB
7	X - Aspect MSB
8	X - Aspect LSB
9	Y - Aspect MSB
10	Y - Aspect LSB
11	Pixel Depth = 08H
12	Reserved = 00H
13	Reserved = 00H
14	EOM

The Pixel Depth and Reserved values shall be set as shown.

D.4.2.3 Header Type Compliance

The header type compliance is summarized by the following table:

Header Type	SCU/SCP Usage
MT2	M/M

Provided by IHS
No reproduction or networking permitted without license from IHS
Not for Resale

MT6	U/U

D.4.3 Image Composition

All images transferred on the digital image interface shall be rectangular. Each line shall have the same number of pixels.

The first pixel transmitted is the upper left corner pixel of the image, followed by the pixels from left to right, top to bottom.

The Photometric Interpretation (0028,0004) is that a pixel value of zero is black.

D.4.4 Data Width

The digital image interface supports 8 bit parallel Data Transfers.

D.4.5 Data Transfer

In order to insure that the data is stable when it is sampled by the SCP, a clock signal is required. This clock is called the strobe line. There is no limit on the minimum data rate within the timeout specified in Section D.7. The maximum input rate is based on the circuitry used to receive the data. The following table summarizes the compliance requirement for maximum transfer rate:

Maximum Transfer Rate	SCU/SCP Usage
1 MHz	M/M
2 MHz	U/U
4 MHz	U/U
6 MHz	U/U
8 MHz	U/U

The SCP shall support all rates up to its stated maximum.

D.4.6 Parity

The SCP shall support odd, even and no parity. The SCU shall choose one of these parity modes. This is summarized as follows:

Parity	SCU/SCP Usage
No Parity	U/M
Even Parity	U/M
Odd Parity	U/M

For odd parity, if the total number of bits in a byte which have a value 1 is an odd number, the parity bit is not set. If the total number of bits in the 1 state is even, then the parity bit is set to insure that there is an odd number of bits set.

For even parity, if the total number of bits in a byte which have a value 1 is an even number, the parity bit is not set. If the total number of bits in the 1 state is odd, then the parity bit is set to insure that there is an even number of bits set.

Note: It is recommended that odd parity be used.

Provided by IHS
No reproduction or networking permitted without license from IHS
Not for Resale

D.5 PROTOCOL EXCEPTION AND EXCEPTION HANDLING

D.5.1 General description

Protocol exceptions occur when the SCP does not correctly receive a Line transmitted from the SCU. An exception may be caused by either an error in the transmitted data, or by an SCP timeout.

For data errors detected during a Line transmission, the SCP shall wait until the Line transmission is complete before indicating the exception to the SCU. The Line transmission is complete when the SCP negates the REQUEST line after receiving either an EOM message character, EOT message character or detecting that the number of data values received exceeds the amount expected for that Line.

Protocol exceptions that are a result of an SCP timeout are indicated to the SCU by the SCP immediately negating the REQUEST line after the timeout occurs. SCP timeouts that shall cause a protocol exception to be generated are summarized in the following table:

Timing Reference Designation See Section D.7.2	Description	SCP Time Out Period
T1	REQUEST high to leading edge of STROBE	60 seconds
T4	STROBE period	60 seconds

D.5.1.1 Indication of Expectations

The SCP shall indicate an exception to the SCU in one of two ways, timeout indicating the transmission is aborted or request for retransmission of the Line. The SCU shall assume that the SCP aborted the transmission when a request is not received within the specified timeout period refer to Section D.7.2, timing parameter T7. A retransmit request is indicated by asserting the RETRANSMIT line to a logic true high, and then asserting the REQUEST line to a logic true high. Refer to Figure D.7-2 for timing details.

The protocol requires a minimum of three attempts to transmit the Line correctly the initial attempt and two retries. Up to ten attempts may be tried before the image transmission session is aborted.

All retransmit requests imply that the last transfer failed and the Line transmission must be repeated. A retransmit request on the header Line means that the header Line must be retransmitted. A retransmit REQUEST on an image Line means that only that Line must be sent again.

D.5.1.2 Request Requirement

The SCP shall not accept any data unless it first initiates a Data Transfer operation by generating a REQUEST signal to the SCU.

D.5.1.3 Aborted Transfer Recovery

This condition occurs when either the SCU or the SCP aborts an image transmission session before successfully transferring the entire image. This situation occurs when either the SCU exceeds the number of allowed retries following error detection, or when the SCU fails to transmit an image before the SCP times out.

When an aborted transfer occurs, the SCU shall resend the entire image, beginning with the first header byte when so requested.

Provided by IHS
No reproduction or networking permitted without license from IHS
Not for Resale

D.5.2 Header Transmission Exceptions

D.5.2.1 General Description

The SCU is prohibited from sending data unless receiving an active REQUEST signal from the SCP. The SCP shall ignore all data and strobes until a BOM character is received.

Note: The high on the MODE line is part of the BOM identification.

D.5.2.2 Invalid Mode Line

The MODE line shall be high during transmission of BOM, MTn and EOM/EOT characters, and low for all other characters. If this is not met, the SCP shall generate a RETRANSMIT request.

D.5.2.3 Invalid Header Length

The number of data elements transferred shall equal the expected number of transfers for the MTn type. For MT2 headers, seven data elements are transferred. For MT6 headers, fourteen data elements are transferred.

If an EOM is detected before the final transfer, the SCP shall generate a RETRANSMIT signal to the SCU.

If a valid EOM is not detected on the final transfer, the SCP shall generate a RETRANSMIT signal to the SCU.

D.5.2.4 Invalid Protocol Values

The SCP shall ignore all transfers until a valid BOM is received.

If the MTn value is not 02H for MT2 header types, or 06H for MT6 header types, the SCP shall generate a RETRANSMIT signal after the last byte of the header has been transmitted.

Note: An exception cannot be generated from the value of the data portion of the header received by the SCP. Data value errors e.g. image size out of range should be handled by the Control Path.

D.5.2.5 Invalid Parity

If parity is enabled and a parity error is detected, the SCP shall generate a retransmit request after the final transfer of the Line has occurred.

D.5.3 Data Line Exceptions

D.5.3.1 Invalid BOM

Until a valid BOM character is received, the SCP ignores all transfers. No retransmits requests shall be generated.

If a valid BOM is not received within the timeout period, the SCP shall negate the REQUEST line and abort the image transfer operation, after the time limit has occurred.

D.5.3.2 Invalid Line

If an invalid Line is received, the SCP shall generate a RETRANSMIT signal. The retransmit event shall occur after a valid EOM is received or when the pixel per Line count has been exceeded.

D.5.3.3 Invalid Pixels per Line

The number of pixels in a Line shall match the horizontal pixel count specified in the header. Each Line shall be terminated with an EOM character, or for the last Line, an EOT character.

If an EOM or EOT is received before the pixel count is matched, the SCP shall generate a RETRANSMIT signal to the SCU.

Provided by IHS
No reproduction or networking permitted without license from IHS
Not for Resale

Once the pixel count has been matched, if the next transfer is not an EOM or EOT, the SCP shall generate a RETRANSMIT signal to the SCU.

D.5.3.4 Invalid Parity Errors

If parity is enabled, and a parity error occurs, a RETRANSMIT signal shall be generated after an EOM is detected or after the pixel count has been matched.

D.5.3.5 Invalid Lines per Image

The last Line shall be terminated with an EOT character rather than an EOM character.

If the EOT character is detected before the line count matches the number of rows/image, the SCP shall generate a RETRANSMIT signal to the SCU.

If the EOT is not the terminator of the Line in which the line count matches the number of rows/image, the SCP shall generate a RETRANSMIT signal to the SCU.

After a minimum of three or a maximum of ten transfer attempts, the SCP shall abort the image transfer after the time out limit specified in Section D.7.2 is reached.

D.6 DIGITAL IMAGE INTERFACE SIGNAL DEFINITIONS

D.6.1 Signal Level Definition

All signals shall be differential RS-422. The signals are defined as:

Name	Direction	Function
DATA 0-7	SCU --> SCP	Input data.
PARITY	SCU --> SCP	Parity bit for the 8 bit data; Parity selectable to be even, odd or disabled.
STROBE	SCU --> SCP	Clock for data.
MODE	SCU --> SCP	Image / Header control; 0 = image data 1 = control data
REQUEST	SCU <-- SCP	Request transmission of next item of data.
RETRANSMIT	SCU <-- SCP	Error in last transfer, retransmit this data again.

D.6.2 REQUEST Signal Operation

The SCP shall raise the REQUEST line to the active high state to signal the SCU to send its data.

The SCP shall hold this REQUEST line high until receipt of either the EOM or EOT character, at which time it sets REQUEST false. This exchange is repeated whenever the SCP is ready to accept a line of data.

D.6.3 Connector Pinout Assignment

The digital Image Path interface shall be supported with a:

a DB37 receptacle connector mounted on the SCP

b DB37 plug connector mounted on the SCU

The connector pinout assignments are:

Provided by IHS
No reproduction or networking permitted without license from IHS
Not for Resale

Pin	Signal	Pin	Signal
1		20	
2		21	
3	RETRANSMIT+	22	RETRANSMIT-
4	REQUEST+	23	REQUEST-
5	MODE+	24	MODE-
6	STROBE+	25	STROBE-
7	PARITY+	26	PARITY-
8	DATA7+ MSB	27	DATA7- MSB
9	DATA6+	28	DATA6-
10	DATA5+	29	DATA5-
11	DATA4+	30	DATA4-
12	DATA3+	31	DATA3-
13	DATA2+	32	DATA2-
14	DATA1+	33	DATA1-
15	DATA0+ LSB	34	DATA0- LSB
16		35	
17		36	
18		37	
19			

Note: This pinout does not comply with standard RS-422 pinout.

A logic high 1 is present when the + side of a signal is higher than the - side of the signal. A logic low 0 is present when the - side is higher than the + side.

Frame ground shall be connected from chassis to shell of connector . The frame ground shall not be connected to any of the connector pins in compliance with international regulations e.g., EM 55022 and IEC 801-4.

Cable shielding shall be connected to the SCP connector shell only.

D.6.4 Digital Image Cable Requirements

The digital image cable connected between the SCU and the SCP shall meet the following requirements:

a Cable length not greater than the maximum allowed for data transfer rate refer to Table D.6-1 for maximum cable lengths assuming 24 AWG

b Shielded twisted pair, with complementary signals + and - twisted. This requires pins 3/22, 4/23, etc., to be twisted

It is recommended that 24 AWG wiring be used. For other gauged wiring, refer to EIA-RS-422-A for details on calculating the maximum cable length.

--`,,`,`,-`-`,,`,,`,`,,`---

Provided by IHS
No reproduction or networking permitted without license from IHS Not for Resale

Table D.6-1
DATA TRANSFER RATE VERSUS MAXIMUM CABLE LENGTH
ASSUMING 24 AWG WIRING

Data Transfer Rate	Maximum Cable Length
1 MHz	100 m
2 MHz	60 m
4 MHz	30 m
6 MHz	20 m
8 MHz	5 m

D.7 TIMING

This section details the timing relationships for the digital interface protocol.

D.7.1 Timing Diagrams

Timing diagrams for Data Transfer are given in Figures D.7-1 and D.7-2.

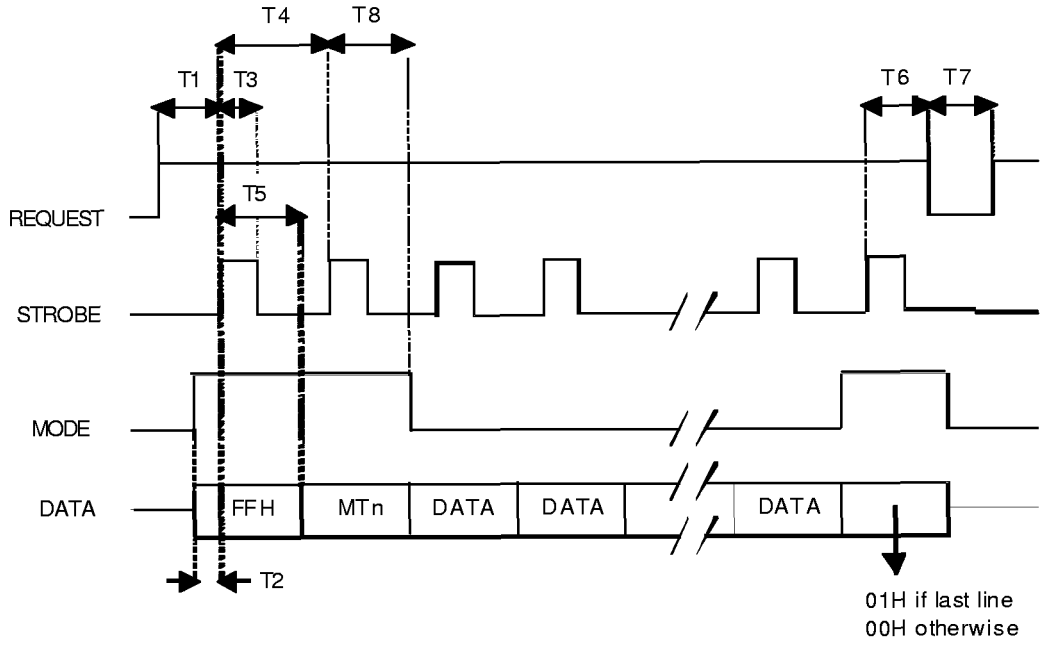

Figure D.7-1
TIMING FOR HEADER AND IMAGE DATA TRANSMISSION

Provided by IHS
No reproduction or networking permitted without license from IHS
Not for Resale

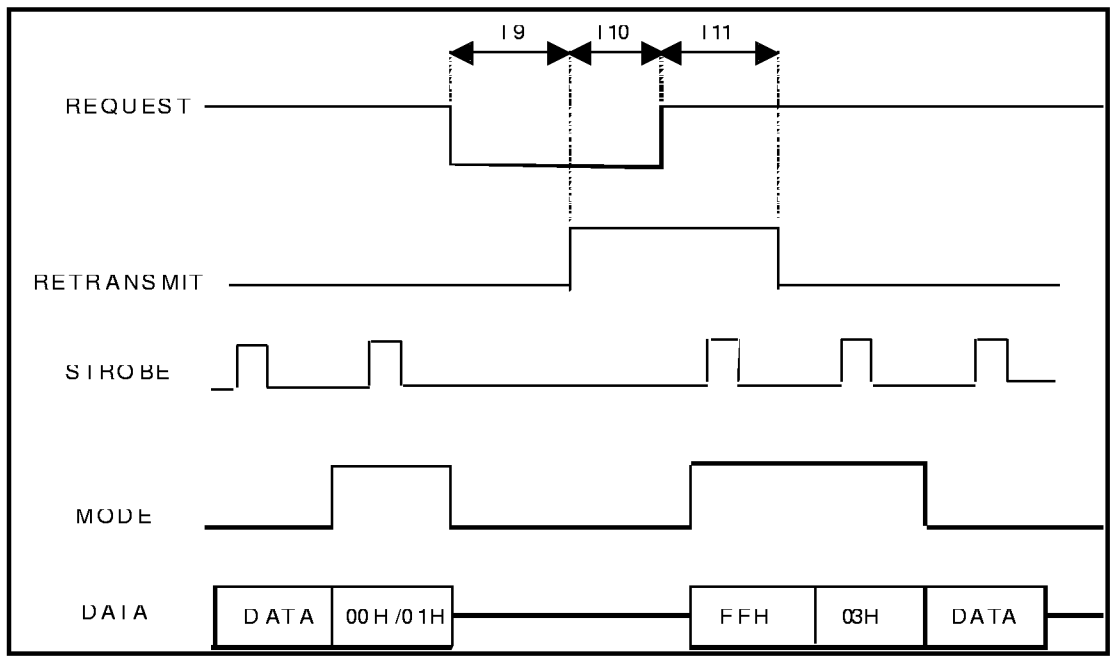

Figure D.7-2
TIMING FOR RETRANSMIT OPERATION

D.7.2 Timing Details

		1 MHz	2 MHz	4 MHz	6 MHz	8 MHz	
T1	REQUEST to leading edge of strobe.	200 ns 60 sec	150 ns 60 sec	100 ns 60 sec	75 ns 60 sec	50 ns 60 sec	min timeout-SCP
T2	DATA/PARITY/MODE setup	300 ns	200 ns	100 ns	75 ns	50 ns	min
T3	STROBE pulse width	0.4 * T4 0.6 * T4	0.4 * T4 0.6 * T4	0.4 * T4 0.6 * T4	0.4 * T4 0.6 * T4	0.4 * T4 0.6 * T4	min max
T4	STROBE period	1 µs 60 sec	500 ns 60 sec	250 ns 60 sec	160 ns 60 sec	125 ns 60 sec	min timeout-SCP
T5	DATA/PARITY hold time	T3 + 100 ns	80 ns	60 ns	40 ns	30 ns	min
T6	REQUEST hold time after EOM or EOT	0 500 µs	0 500 µs	0 500 µs	0 500 µs	0 500 µs	min timeout-SCU
T7	REQUEST inactive before REQUEST	200 ns 500 µs	160 ns 500 µs	160 ns 500 µs	160 ns 500 µs	160 ns 500 µs	min timeout-SCU
T8	MODE hold time	T3 + 100 ns	80 ns	60 ns	40 ns	30 ns	min
T9	REQUEST inactive before RETRANSMIT	1 µs 500 µs	160 ns 20 µs	160 ns 20 µs	160 ns 20 µs	160 ns 20 µs	min max
T10	RETRANSMIT setup before REQUEST	1 µs 500 µs	80 ns 20 µs	80 ns 20 µs	80 ns 20 µs	80 ns 20 µs	min max

Provided by IHS
No reproduction or networking permitted without license from IHS
Not for Resale

T11	RETRANSMIT hold time	0.1 µs See note 3	0.1 µs See note 3	0.1 µs See note 3	0.1 µs See note 3	0.1 µs See note 3	min max

Notes: 1. For reliable transmission, the STROBE pulse width should be targeted to be 50% of the transfer time.

2. The 1 MHz T5 and T8 timings are referenced to the actual T3 used to support current hardware practices.

3. The maximum T11 time shall be less than the request hold time.

If retransmission is not needed for a given message, then REQUEST is issued after T7. If a retransmission is needed then RETRANSMIT is issued after T9 and REQUEST is issued after an additional T10 .

Timing references T1, T2, T3, T4, T5 and T8 are set by the SCU and guaranteed to the SCP.

Timing references T6, T7, T9, T10 and T11 are set by the SCP and guaranteed to the SCU.

The SCU shall meet the minimum times of its fastest supported rate. This will guarantee operation at the slower rates as well. The SCP may be designed to operate at minimum timings applicable to all supported rates. If SCP designs attempt to push the fast minimum recoveries possible in T7 and T9 for the higher data rates, it shall also provide a configurable way to ensure that the 1 MHz timing references are met.

SCU Timeout Handling. If the SCU times out as specified in T6 and T7, it aborts the current data transfer and waits for the next SCP activity.

The Strobe width T3 is referenced to the actual T4 period used.

T4 and T7 Timeouts apply only during an image transfer.

Provided by IHS
No reproduction or networking permitted without license from IHS
Not for Resale

Annex E POINT-TO-POINT PRINT MANAGEMENT SERVICE CLASS OVERVIEW (Informative)

E.1 SCOPE

The Point-to-Point Print Management Service Class describes the exchange of information between two devices to cause images to be printed on film or paper.

This Annex illustrates the key points of the Service Class. These are only examples. In many cases, the same functions could be accomplished by other series of commands. The specification of the Service Class is contained in Annex A of this Part.

References to specific Sections in other Parts of the DICOM Standard in this Annex are specifically to the following versions:

a Part 3 PS 3.3-1993
b Part 4 PS 3.4-1993
c Part 7 PS 3.7-1993
d Part 8 PS 3.8-1993

In future versions of these Parts, the specific section references may no longer be valid.

E.2 SUMMARY

E.2.1 Roles of the Devices

Each of the two devices plays one of two roles during a print session. The device that provides the image data and desires to have the prints made is referred to as the Service Class User SCU. The device that receives the image data and makes the prints is the Service Class Provider SCP.

E.2.2 Information Structure

Information exchanged between the SCU and SCP is represented by Service-Object Pair Instances SOP Instances. These are a combination of object instances and services performed on the objects.

There are three general types of Attributes for SOP Instances.

a Mandatory for both the SCU and SCP. These are designated as M/M.
b Optional for the SCU, but mandatory for the SCP. If the SCU provides these Attributes, the SCP must act on them. In addition, the SCP will have defaults for each of these Attributes and stated the defaults and the valid range of values in its Conformance Statement. These are designated as U/M.
c Optional for both the SCU and SCP. If the SCU provides these Attributes, the SCP may ignore them. These are designated as U/U.

Usage is further defined in Sections 5.4 and H.2.4 of PS 3.4.

The information needed by the SCP to print the films is contained in a three layer hierarchy of four SOP Instances. In general, the Attributes of these SOP Instances are provided by the SCU.

Provided by IHS
No reproduction or networking permitted without license from IHS
Not for Resale

Information needed by the SCU about the status of the SCP or the Print Job is contained in one of two other SOP Instances. In general, the Attributes of the SOP Instances are provided by the SCP.

Provided by IHS
No reproduction or networking permitted without license from IHS
Not for Resale

E.2.2.1 Information Needed by the SCP

a The Basic Film Session contains Attributes that apply to all films in an entire film session. The SCU determines what constitutes a film session. It may be a single film, or multiple films from the same patient, study, etc. A single Film Session SOP Instance is required for the film session.

b The Basic Film Box contains Attributes that apply to all images on a single film. A film contains one or more images and optionally text annotation. One Film Box SOP Instance is required for each page in the film session.

c The Point-to-Point Image Box contains Attributes that apply to a single image on the film. One image box is required for each image in each film box in the film session.

d The Basic Annotation Box contains information needed to add text information to the printed film. The use of the Annotation Box is optional and is negotiated when the Association is established. If used, there is one Annotation Box SOP Instance for each text string to be printed on all film boxes in the film session.

E.2.2.2 Information Needed by the SCU

a The Printer SOP Class contains information about the printer. These include SCP status information and the name of the printer. Support of this SOP Class is required for all devices.

b The Print Job contains Attributes that may be needed by the SCU to determine the status of the print job after it has been sent to the print queue by the printer. The use of the Print Job is optional and is negotiated when the Association is established.

E.3 EXAMPLES OF POSSIBLE FILM SESSIONS

E.3.1 Simple Example

In this simple example, none of the optional SOP Classes are supported. The SCU simply instructs the SCP to print sequential pages of images all with the same format. A single Film Session SOP Instance is created and it contains a Film Box SOP Instance.

E.3.1.1 Summary of Simple Example

a Establish the Association. This is done once and remains open indefinitely.

b Create the film session the same film session is used for all pages

c Create the film box

d Acquire each image for the page

e Print the page

f Notify that printer film supply becomes Low

g Delete the film box deletes images from previous page

h Create a new film box

i Acquire new images for a new page

j Print the new page

k Repeat g—j for each subsequent page

E.3.1.2 Establish the Association

The first step is the establishment of an Association by the SCU. This is performed by the SCU issuing an A-ASSOCIATE-REQUEST and is described in PS 3.7 and PS 3.8.

In this example, the Association remains open indefinitely.

Provided by IHS
No reproduction or networking permitted without license from IHS
Not for Resale

E.3.1.3 Create the Film Session

The SCU initiates the transaction by sending film session attributes to the printer. This is done through an N-CREATE of a Basic Film Session SOP Instance. This is described in Section H.4.1 in PS 3.4.

a The film session is required to have a Unique Identifier UID. This UID may be provided by the SCU as an Attribute of the N-CREATE. Otherwise, the SCU asks the SCP to specify a UID by sending the UID Attribute in the N-CREATE with a zero length value.

b U/M Attributes
- Number of copies for each film in the session
- Priority low, medium, high of the session
- Type of medium to be printed on clear or blue film or paper
- Destination of the printed film processor or magazine

c U/U Attributes
- An SCU defined label for the session
- An amount of memory the SCU expects to need to store all images in the session

d In the response to the N-CREATE, the SCP is required to provide the UID of the created film session and the status of the command

e These Attributes apply to all pages in the film session.

E.3.1.4 Create the Film Box

The SCU then sends attributes of the first page in the film session to the printer. This is done through an N-CREATE of a Basic Film Box SOP Instance. This is described in Section H.4.2 in PS 3.4.

a The film box is required to have a Unique Identifier UID. This UID may be provided by the SCU as an Attribute of the N-CREATE. Otherwise, the SCU asks the SCP to specify a UID by sending the UID Attribute in the N-CREATE with a zero length value.

b M/M Attributes
- The image display format, typically the number of rows and columns of images to be printed on the page
- The UID of the film session to which this page belongs

c U/M Attributes
- Film orientation landscape or portrait
- The size of the film to be used
- Type of magnification to be used to print the images
- Maximum density to which images are to be printed
- Special configuration information that is specific to one or more particular printers. The nature of this information is provided by the SCP in its Conformance Statement.

d U/U Attributes
- Additional information about smoothing options to the magnification type
- Density that the border around individual images is to be printed
- Density that empty image area is to be printed
- Minimum density to which images are to be printed
- Whether or not trim is to be printed around each image

e In the response to the N-CREATE, the SCP is required to provide the UID of the created film box and the status of the command.

Provided by IHS
No reproduction or networking permitted without license from IHS
Not for Resale

In addition, the N-CREATE of the film box instructs the SCP to create one or more Image Box SOP Instances. The number to be created equals the number of images to be printed on the page as specified by the Attribute Display Format.

In the response to the N-CREATE of the film box, the SCP also returns the UIDs of the image boxes that it created.

E.3.1.5 Acquire Each Image for the Page

The SCU then sends attributes of the first image on the page. This is done through an N-SET of a Point-to-Point Image Box SOP Instance. This is described in Annex A in this Part.

a The SCU makes the pixel data available on the Image Path.

b The SCU then issues an N-SET command. This command contains attributes of the particular image to be printed.

c M/M Attributes
- Image Position which specifies the position on the page on which this image is to be placed
- UID of the film box to which this image belongs

d U/M Attributes
- Polarity at which the image is to be printed
- Image pixel Aspect Ratio

e U/U Attributes
- Magnification Type
- Smoothing Type
- Requested Image Size

f After receiving the N-SET, the SCP acquires the image pixel data through the Image Path Physical Layer

g The SCP then returns an N-SET response that specifies the status of the command.

h This process is repeated for each image to be printed on the page.

E.3.1.6 Print the Page

After all images to be printed have been acquired, the SCU instructs to SCP to print the specified number of copies of the page by issuing an N-ACTION on the film box. This is described in Section H.4.2.2.4 in PS 3.4.

a The N-ACTION contains only the Film Box Class and Instance UIDs.

b The N-ACTION response is required to contain only the status of the command.

c The result of the N-ACTION is that pixel data for the page is entered into the print queue. There is no effect on the Attributes of the Film Box SOP Instance itself. The SCU could cause additional copies to be printed by reissuing an N-ACTION command.

E.3.1.7 Printer Film Supply Becomes Low.

The SCP is close to running out of film and notifies the user.

The SCP initiates an N-EVENT-REPORT of type WARNING. This command contains the printer name and its status. The Attribute Printer Status Info (2110,0020) contains the defined term SUPPLY LOW.

The PRINTER SOP Class is described in Section H.4.6 of PS 3.4. The possible values for printer Status Info are described in Table C.13.9-1 of PS 3.3.

Provided by IHS
No reproduction or networking permitted without license from IHS
Not for Resale

E.3.1.8 Delete the Film Box

The SCU issues an N-DELETE of the film box. This indicates to the SCP that no further printing of these images will be requested.

N-DELETE of the film box is described in Section H.4.2.2.3 of PS 3.4.

E.3.1.9 Create a New Film Box

The SCU issues an N-CREATE for a new film box.

E.3.1.10 Acquire New Images for the New Page

The SCU now makes available the image pixel data for the next page to be printed. This is done by issuing N-SET commands that instruct the SCP to acquire the image pixel data.

This process is repeated for each image to be printed on the new page.

E.3.1.11 Print the New Page

The SCU issues an N-ACTION on the film box.

E.3.1.12 Repeat

The steps in Sections E.3.1.8 through E.3.1.11 are repeated for each new page to be printed. New values for the film box Attributes may be specified by the SCU each time the film box N-CREATE is issued.

E.3.2 Options to the Simple Example

E.3.2.1 Change the Number of Copies

Suppose one copy of each page is being printed, but the SCU wishes to have the next three pages printed with two copies.

Any time between the N-ACTION for the previous page and the N-ACTION for the next page, the SCU issues an N-SET on the film session with number of copies of 2. Subsequent N-ACTIONs will cause 2 copies of the page to be printed.

After the third page is printed, the SCU issues another N-SET on the film session with number of copies of 1.

N-SET on the film session is described in Section H.4.1.2.2 in PS 3.4.

E.3.2.2 Image Stored in Error

In this case, a page has been printed, but the SCU realizes that the image in position 5 should not be on the page. Before the N-DELETE is issued, the Film Box SOP still exists on the SCP with all the images. These images can be changed with N-SETs and then reprinted with a new N-ACTION.

If this image is to be replaced with another image, the SCU places the new image on the Image Path and issues an N-SET for position 5. This instructs the SCP to replace the old image in position 5 with the new image.

Optionally, the image in error could be replaced with a blank space in position 5. The SCU issues an N-SET for position 5 with Attribute Preformatted Grayscale Image Sequence (2020,0110) with zero length value. This instructs the SCP to erase the image previously placed in this position.

E.3.2.3 Summary of Simple Example with Options Exercised

Establish the Association with A-ASSOCIATE REQUEST

a Create the film session with N-CREATE

Provided by IHS
No reproduction or networking permitted without license from IHS
Not for Resale

b Create the film box with N-CREATE
c Acquire each image for the page with N-SETs
d Print the first page with N-ACTION
e Notify that Printer Film Supply Becomes Low with N-EVENT
f Delete the film box with N-DELETE
g Create a new film box with N-CREATE
h Acquire new images for a new page with N-SETs
i Print the second page with N-ACTION
j Delete the film box with N-DELETE
k Create a new film box with N-CREATE
l Acquire new images for a new page with N-SETs
m Change copies to 2 with N-SET on the film session
n Print 2 copies of the third page with N-ACTION
o Change image in position 5 with N-SET on the image box
p Reprint 2 copies of the third page with N-ACTION
q Change copies to 1 with N-SET on the film session

Provided by IHS
No reproduction or networking permitted without license from IHS
Not for Resale

E.3.3 Embellished Example

Following is an example that utilizes some of the optional features of the Service Class.

a printing at the film session level
b annotation on the films
c print job status notification

The advantage of printing at the film session level is that all pages in the session will be printed sequentially. In addition, if multiple copies are requested they will be collated. For example, 2 copies of a 4 film session would be printed 12341234. Pages from other print jobs from other SCUs supported by the same printer on other Physical Links that may be active on the same printer will not be interspersed between these pages. N-ACTION on the film session is described in Section H.4.1.2.4 in PS 3.4.

Annotation allows the printing of text on a film page. It is negotiated when the Association is established. This is accomplished by the SCU specifying an Annotation Display Format ID in the N-CREATE of the film box. This instructs the SCP to create Annotation Boxes. The SCU then does N-SETs on the Annotation Boxes. Annotation formats provided by the SCP are specified in its Conformance Statement. Annotation is described in Sections H.4.2.2.1 and H.4.4 in PS 3.4.

The Print Job SOP Class provides notification to the SCU of changes in the status of the films in the printing process. It is negotiated when the Association is established. The Print Job SOP Instance is created by the SCP as a result of an N-ACTION on the film session or film box initiated by the SCU. If this SOP is supported, the SCP reports changes in the status of the print job to the SCU with N-EVENT REPORTs. In addition, the SCU may request information on the status with an N-GET. The Print Job SOP Class is described in Section H.4.5 in PS 3.4. Specific status information is described in Section C.13.8 in PS 3.3.

In the following example, films from two film sessions are printed and collated. Each session is the films from a single study. Each study contain three films. Annotation is placed on the first and third films.

Actions are initiated by the SCU except as specifically noted.

Establish the Association with A-ASSOCIATE

a Create the film session with N-CREATE
  – Create the first film box with N-CREATE
  – Place annotation text string with N-SET
  – Place each image for the page with N-SETs
  – Create the second film box with N-CREATE
  – Place each image for the page with N-SETs
  – Create the third film box with N-CREATE
  – Place annotation text string with N-SET
  – Place each image for the page with N-SETs
b Request film session be printed with N-ACTION
c SCP Notifies SCU that print job is pending with N-EVENT-REPORT
d Delete the film session with N-DELETE
e Request update on print job status with N-GET
f Create new film session with N-CREATE
g Create the first film box with N-CREATE
h SCP Notifies SCU that print job is printing with N-EVENT-REPORT
i SCP Notifies SCU that print job is done with N-EVENT-REPORT

Provided by IHS
No reproduction or networking permitted without license from IHS
Not for Resale

{Complete second film session in similar manner}

Release the Association with A-RELEASE.

Provided by IHS
No reproduction or networking permitted without license from IHS
Not for Resale

Annex F INDEX TO ATTRIBUTE TAGS AND UIDs (Informative)

(0028,0004)..... 25
(0028,0034)..... 12
(2010,0060)..... 12, 13
(2010,0080)..... 13
(2020,0010)..... 12, 13
(2020,0020)..... 12
(2020,0030)..... 13
(2020,0110)..... 6, 12, 13, 38
(2110,0020)..... 37
1.2.840.10008.5.1.1.4.271..... 14
1.2.840.10008.5.1.1.9.271..... 11

Provided by IHS
No reproduction or networking permitted without license from IHS
Not for Resale