Designation: A 139/A 139M – 04

Standard Specification for Electric-Fusion (Arc)-Welded Steel Pipe (NPS 4 and Over)[1]

This standard is issued under the fixed designation A 139/A 139M; the number immediately following the designation indicates the year of original adoption or, in the case of revision, the year of last revision. A number in parentheses indicates the year of last reapproval. A superscript epsilon (ε) indicates an editorial change since the last revision or reapproval.

This standard has been approved for use by agencies of the Department of Defense.

1. Scope*

1.1 This specification covers five grades of electric-fusion (arc)-welded straight-seam or helical-seam steel pipe. Pipe of NPS 4 (Note 1) and larger with nominal (average) wall thickness of 1.0 in. [25.4 mm] and less are covered. Listing of standardized dimensions are for reference (Note 2). The grades of steel are pipe mill grades having mechanical properties which differ from standard plate grades. The pipe is intended for conveying liquid, gas, or vapor.

NOTE 1—The dimensionless designator NPS (nominal pipe size) has been substituted in this standard for such traditional terms as "nominal diameter,"" size," and "nominal size."

NOTE 2—A comprehensive listing of standardized pipe dimensions is contained in ASME B36.10M[2].

NOTE 3—The suitability of pipe for various purposes is somewhat dependent on its dimensions, properties, and conditions of service. For example, for high-temperature service see applicable codes and Specification A 691.

1.2 The values stated in either inch-pound units or in SI units are to be regarded separately as standard. Within the text, the SI units are shown in brackets. The values in each system are not exact equivalents; therefore, each system is to be used independently of the other.

2. Referenced Documents

2.1 *ASTM Standards:* [3]

A 370 Test Methods and Definitions for Mechanical Testing of Steel Products

A 691 Specification for Carbon and Alloy Steel Pipe, Electric Fusion-Welded for High-Pressure Service at High Temperatures

A 751 Test Methods, Practices, and Terminology for Chemical Analysis of Steel Products

E 59 Practice for Sampling Steel and Iron for Determination of Chemical Composition[4]

2.2 *American Welding Society Standard:*[5]

AWS B2.1 Standard for Welding Procedure and Performance Qualifications Welding Handbook, Vol 1, 8th ed

2.3 *ASME Standards:*[6]

ASME B36.10M Welded and Seamless Wrought Steel Pipe

ASME B36.19M Stainless Steel Pipe

ASME Boiler and Pressure Vessel Code: Section IX, Welding Qualifications

3. Ordering Information

3.1 Orders for material under this specification should include the following, as required, to describe the desired material adequately:

3.1.1 Quantity (feet, metres, or number of lengths),

3.1.2 Name of material (electric-fusion-(arc) welded steel pipe),

3.1.3 Grade (Table 1),

3.1.4 Size (NPS, or outside diameter, and nominal wall thickness, or schedule number),

3.1.5 Lengths (specific or random, Section 17),

3.1.6 End finish (Section 18),

3.1.7 Hydrostatic test pressure (Section 16, Note 8, and Note 9),

3.1.8 ASTM specification designation, and

3.1.9 End use of material.

4. Process

4.1 The steel shall be made by one or more of the following processes: open-hearth, basic-oxygen, or electric-furnace.

4.2 Steel may be cast in ingots or may be strand cast. When steels of different grades are sequentially strand cast, identification of the resultant transition material is required. The producer shall remove the transition material by any established procedure that positively separates the grades.

NOTE 4—The term "basic-oxygen steelmaking" is used generically to

[1] This specification is under the jurisdiction of ASTM Committee A01 on Steel, Stainless Steel, and Related Alloys , and is the direct responsibility of Subcommittee A01.09 on Carbon Steel Tubular Products.

Current edition approved March 1, 2004. Published April 2004. Originally approved in 1932. Last previous edition approved in 2000 as A 139 – 00.

[2] *Annual Book of ASTM Standards*, Vol 01.01.

[3] For referenced ASTM standards, visit the ASTM website, www.astm.org, or contact ASTM Customer Service at service@astm.org. For *Annual Book of ASTM Standards* volume information, refer to the standard's Document Summary page on the ASTM website.

[4] Withdrawn.

[5] Available from American Welding Society, 550 NW LeJeune Rd., Miami, FL 33135.

[6] Available from American Society of Mechanical Engineers, Three Park Ave., New York, NY 10016-5990.

***A Summary of Changes section appears at the end of this standard.**

Copyright © ASTM International, 100 Barr Harbor Drive, PO Box C700, West Conshohocken, PA 19428-2959, United States.

Copyright ASTM International
Reproduced by IHS under license with ASTM
No reproduction or networking permitted without license from IHS
Not for Resale

TABLE 1 Chemical Requirements

Element	Composition, max, %				
	Grade A	Grade B	Grade C	Grade D	Grade E
Carbon	0.25	0.26	0.28	0.30	0.30
Manganese	1.00	1.00	1.20	1.30	1.40
Phosphorus	0.035	0.035	0.035	0.035	0.035
Sulfur	0.035	0.035	0.035	0.035	0.035

describe processes in which molten iron is refined to steel under a basic slag in a cylindrical furnace lined with basic refractories, by directing a jet of high-purity gaseous oxygen onto the surface of the hot metal bath.

5. Manufacture

5.1 The longitudinal edges of the steel shall be shaped to give the most satisfactory results by the particular welding process employed. The weld shall be made by automatic (Note 5) means (except tack welds if used) and shall be of reasonably uniform width and height for the entire length of the pipe.

NOTE 5—Upon agreement between the purchaser and the manufacturer, manual welding by qualified procedure and welders may be used as an equal alternative under these specifications.

5.2 All weld seams made in manufacturing pipe shall be made using complete joint penetration groove welds.

6. Chemical Composition

6.1 The steel shall conform to the chemical requirements prescribed in Table 1 and the chemical analysis shall be in accordance with Test Methods, Practices, and Terminology A 751.

7. Tensile Requirements for the Steel

7.1 Longitudinal tension test specimens taken from the steel shall conform to the requirements as to tensile properties prescribed in Table 2. At the manufacturer's option, the tension test specimen for sizes 8⅝ in. [219.1 mm] in outside diameter and larger may be taken transversely as described in 19.4.

7.2 The yield point shall be determined by the drop of the beam, by the halt in the gage of the testing machine, by the use of dividers, or by other approved methods. The yield strength corresponding to a permanent offset of 0.2 % of the gage length of the specimen, or to a total extension of 0.5 % of the gage length under load shall be determined.

8. Tensile Requirements of Production Welds

8.1 Reduced-section tension test specimens taken perpendicularly across the weld in the pipe, with the weld reinforcement removed, shall show a tensile strength not less than 95 %

TABLE 2 Tensile Requirements

	Grade A	Grade B	Grade C	Grade D	Grade E
Tensile strength, min, ksi [MPa]	48 [330]	60 [415]	60 [415]	60 [415]	66 [455]
Yield strength, min, ksi [MPa]	30 [205]	35 [240]	42 [290]	46 [315]	52 [360]
Elongation in 2 in. or 50 mm, min, %:					
Basic minimum elongation for walls 5⁄16 in. [7.9 mm] and over in thickness, longitudinal strip tests	35	30	25	23	22
For longitudinal strips tests, a deduction for each 1⁄32-in. [0.8-mm] decrease in wall thickness below 5⁄16 in. [7.9 mm] from the basic minimum elongation of the following percentage[A]	1.75[A]	1.50[A]	1.25	1.50	2.0
Elongation in 8 in. or 200 mm, min, %[B,C]	Inch Pound Units, *1500/specified minimum tensile strength (ksi)* SI Units, *10 300/specified minimum tensile strength [MPa]*				

[A] The table below gives the computed minimum values.
[B] For wall thicknesses ½ in. [12.7 mm] and greater, the elongation may be taken in 8 in. or 200 mm.
[C] The elongation in 8 in. or 200 mm need not exceed 30 %.

Wall Thickness		Elongation in 2 in. or 50 mm, min, %	
in.	mm	Grade A	Grade B
5⁄16 (0.312)	7.9	35.00	30.00
9⁄32 (0.281)	7.1	33.25	28.50
¼ (0.250)	6.4	31.50	27.00
7⁄32 (0.219)	5.6	29.75	25.50
3⁄16 (0.188)	4.8	28.00	24.00
5⁄32 (0.156)	4.0	26.25	22.50
⅛ (0.125)	3.7	24.50	21.00
3⁄32 (0.094)	2.4	22.75	19.50
1⁄16 (0.062)	1.6	21.00	18.00

Note—The above table gives the computed minimum elongation values for each 1⁄32-in. [0.8-mm] decrease in wall thickness. Where the wall thickness lies between two values shown above, the minimum elongation value shall be determined by the following equation:

Grade	Equation Inch-Pound Units	Equation SI Units
A	$E = 56t + 17.50$	$E = 2.20t + 17.50$
B	$E = 48t + 15.00$	$E = 1.89t + 15.00$
C	$E = 40t + 12.50$	$E = 1.57t + 12.50$
D	$E = 48t + 8$	$E = 1.89t + 8$
E	$E = 64t + 2$	$E = 2.52t + 2$

where:
E = elongation in 2 in. or 50 mm, %, and
t = actual thickness of specimen, in. [mm]

Copyright ASTM International
Reproduced by IHS under license with ASTM
No reproduction or networking permitted without license from IHS
Not for Resale

of the minimum specified in Section 7. At the manufacturer's option, the test may be made without removing the weld reinforcement, in which case the tensile strength shall be not less than that specified in Section 7.

9. Heat Analysis

9.1 An analysis of each heat of steel shall be made by the manufacturer to determine the percentages of the elements specified in Section 6. This analysis shall be made from a test ingot taken during the pouring of the heat. When requested by the purchaser, the chemical composition thus determined shall be reported to the purchaser or his representative, and shall conform to the requirements specified in Section 6.

10. Product Analysis

10.1 An analysis may be made by the purchaser on samples of pipe selected at random and shall conform to the requirements specified in Section 6. Samples for chemical analysis, except for spectrochemical analysis, shall be taken in accordance with Method E 59. The number of samples shall be determined as follows:

NPS	Number of Samples Selected
Under 14	2 for each lot of 200 pipes or fraction thereof
14 to 36, incl	2 for each lot of 100 pipes or fraction thereof
Over 36	2 for each 3000 ft or fraction thereof

10.2 *Retests*—If the analysis of either length of pipe or length of skelp does not conform to the requirements specified in Section 6, analyses of two additional lengths from the same lot shall be made, each of which shall conform to the requirements specified.

11. Dimensions, Mass, and Permissible Variations

11.1 *Mass*—The specified mass per unit length shall be calculated using the following equation:

$$M = C(D - t)t \quad (1)$$

where:

C = 10.69 [0.02466],
M = mass per unit length, lb/ft [kg/m],
D = outside diameter, in. [mm], specified or calculated (from inside diameter and wall thickness), and
t = specified wall thickness, in. (to 3 decimal places) [mm] (to 2 decimal places)

NOTE 6—The mass per unit length given in ASME B36.10M and ASME B36.19M and the calculated mass given by the equation of 11.1 are for carbon steel pipe. The mass per unit length of pipe made of ferritic stainless steels may be about 5 % less, and that made of austenitic stainless steel about 2 % greater than the values given. The specified mass of an individual pipe length shall be calculated as its specified mass per unit length times its length.

11.1.1 The mass of any length of pipe shall not vary more than 10 % over its specified mass.

11.1.2 The mass of any length of pipe shall not vary more than 5 % under the specified mass if the specified wall thickness is 0.188 in. [4.78 mm] or less or more than 5.5 % under if the specified wall thickness is greater than 0.188 in. [4.78 mm].

11.1.3 The mass of a carload lot shall not vary more than 1.75 % under the specified mass. A carload lot is considered to be a minimum of 40 000 lb [18 Mg] shipped on a conveyance.

11.2 *Thickness*—The minimum wall thickness at any point shall be not more than 12.5 % under the nominal wall thickness specified.

11.3 *Circumference*—The pipe shall be substantially round. The outside circumference of the pipe shall not vary more than ±1.0 %, but not exceeding ±¾ in. [19.0 mm], from the nominal outside circumference based upon the diameter specified, except that the circumference at ends shall be sized, if necessary, to meet the requirements of Section 18.

11.4 *Straightness*—Finished pipe shall be commercially straight. When specific straightness requirements are desired, the order should so state, and the tolerance shall be a matter of agreement between the purchaser and the manufacturer.

11.5 *Ovality (Out-of-Roundness)*—The pipe diameter, within 4.0 in. [100 mm] of ends, shall not vary more than 1 % from the specified diameter as measured across any single plane with a bar gage, caliper, or other instrument capable of measuring actual diameter.

12. Finish

12.1 *Repair by Welding*—The manual, or automatic arc, welding of injurious defects in the pipe wall, provided their depth does not exceed one third the specified wall thickness, will be permitted. Defects in the welds, such as sweats or leaks, shall be repaired or the piece rejected at the option of the manufacturer. Repairs of this nature shall be made by completely removing the defect, cleaning the cavity, and then welding.

12.2 All repaired pipe shall be tested hydrostatically in accordance with Section 16.

13. Retests

13.1 If any specimen tested under Sections 8 or 15 fails to meet the requirements, retests of two additional specimens from the same lot of pipe shall be made, all of which shall meet the specified requirements. If any of the retests fail to conform to the requirements, test specimens may be taken from each untested pipe length, at the manufacturer's option, and each specimen shall meet the requirements specified, or that pipe shall be rejected.

14. Number of Production Test Specimens

14.1 One longitudinal tension test specimen specified in 19.2 shall be made from the steel of each heat, or fraction thereof, used in the manufacture of the pipe.

14.2 One reduced-section production weld test specimen specified in 19.5 shall be taken from a length of pipe from each lot of 3000 ft (914 m) of pipe, or fraction thereof, of each size and wall thickness.

14.3 If any test specimen shows defective machining or develops flaws not associated with the quality of the steel or the welding, it may be discarded and another specimen substituted.

14.4 Each length of pipe shall be subjected to the hydrostatic test specified in Section 16.

15. Qualification of Welding Procedure

15.1 Welding procedures shall be qualified in accordance with the requirements of AWS B2.1; ASME Boiler and

Copyright ASTM International
Reproduced by IHS under license with ASTM
No reproduction or networking permitted without license from IHS
Not for Resale

Pressure Vessel Code, Section IX; or other qualification procedures as noted in the American Welding Society Welding Handbook. Tests and test values shall be as specified in 15.2 and 15.3.

15.2 Two reduced-section tension specimens made in accordance with Fig. 1, with the weld reinforcement removed, shall show a tensile strength not less than 100 % of the minimum specified tensile strength of the grade of steel used.

15.3 Bend test specimens (two face-bend and two root-bend or four side-bend as designated by the welding procedure according to thickness) shall be prepared in accordance with Fig. 2 and shall withstand being bent 180° in a jig substantially in accordance with Fig. 3. The bend test shall be acceptable if no cracks or other defects exceeding ⅛ in. [3.2 mm] in any direction are present in the weld metal or between the weld and the pipe metal after bending. Cracks that originate along the edges of the specimens during testing, and that are less than ¼ in. [6.4 mm] in any direction shall not be considered. (If necessary, the specimen shall be broken apart to permit examination of the fracture.)

16. Hydrostatic Test (Note 7)

16.1 Each length of pipe shall be tested by the manufacturer to a hydrostatic pressure that will produce in the pipe wall a stress of not less than 60 % of the specified minimum yield strength at room temperature. The pressure shall be determined by the following equation:

$$P = 2St/D \quad (2)$$

where:

P = hydrostatic test pressure, psi [MPa] (not to exceed 2800 psi [19.3 MPa] in any case) (Note 8),
S = 0.60 to 0.85 times the specified minimum yield strength of the grade of steel used in psi [MPa],
t = specified wall thickness, in. [mm], and
D = specified outside diameter, in.[mm]

NOTE 7—A hydrostatic sizing operation is not to be considered a hydrostatic test or a substitute for it.

NOTE 8—When the diameter and wall thickness of pipe are such that the capacity limits of testing equipment are exceeded by these requirements, the test pressures may be reduced by agreement between the purchaser and the manufacturer.

NOTE 9—Where specified in the purchase order, the pipe may be tested: (1) to 1.5 times the specified working pressure, provided the test pressure does not exceed 2800 psi [19.3 MPa] or produce a fiber stress in excess of 85 % of the specified minimum yield strength for the applicable pipe grade, or (2) to a fiber stress of 85 % or less of the specified minimum yield strength for the applicable pipe grade, provided that the test pressure does not exceed 2800 psi [19.3 MPa].

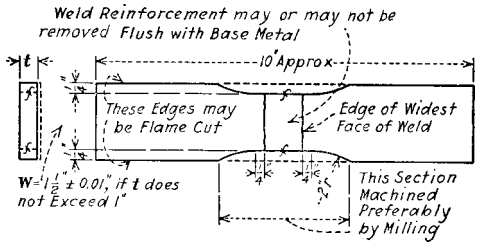

Metric Equivalents

in.	0.01	¼	1½	10
mm	0.3	6.4	38	250

FIG. 1 Reduced-Section Tension Test Specimen

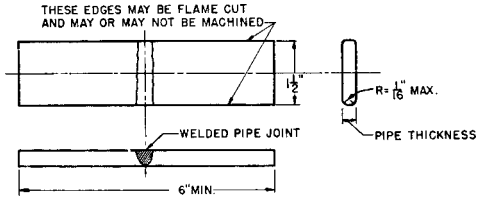

Metric Equivalents

in.	1/16	1½	6
mm	1.6	38	150

NOTE 1—Weld reinforcement may or may not be removed flush with the surface of the specimen.

NOTE 2—Shown in Fig. 2 is a root- or face-bend specimen. Side-bend specimens shall have a thickness (T) of ⅜ in. (9.5 mm) and a width equal to the pipe wall thickness.

FIG. 2 Guided-Bend Test Specimen

16.2 Test pressure shall be held for not less than 5 s, or for a longer time as agreed upon between the purchaser and the manufacturer.

17. Lengths

17.1 Pipe lengths shall be supplied in accordance with the following regular practice:

17.1.1 Specific lengths shall be as specified on the order with a tolerance of ±½ in. [12.7 mm], except that the shorter lengths from which test coupons have been cut shall also be shipped.

17.1.2 Unless otherwise specified random lengths shall be furnished in lengths averaging 29 ft [8.9 m] or over, with a minimum length of 20 ft [6.1 m], but not more than 5 % may be under 25 ft [7.6 m].

17.1.3 Pipe lengths containing circumferentially welded joints (Note 6) shall be permitted by agreement between the purchaser and the manufacturer. Tests of these welded joints shall be made in accordance with the production weld tests described in Section 8. The number of production weld tests shall be one for each lot of 100 joints or fraction thereof, but not less than one for each welder or welding operator.

NOTE 10—Circumferentially welded joints are defined for the purpose of these specifications as a welded seam lying in one plane, used to join lengths of straight pipe.

18. Ends

18.1 Pipe shall be furnished with plain right-angle cut or beveled ends as specified. All burrs at the ends of pipe shall be removed.

18.2 When pipe is specified to have the ends prepared for field welding of circumferential joints, the ends shall be beveled on the outside to an angle of 35°, measured from a line drawn perpendicular to the axis of the pipe, with a tolerance of ±2½ ° and with a width of root face (or flat at the end of the pipe) of 1/16 ± 1/32 in. [1.6 ± 0.8 mm]. Unless otherwise specified, the outside circumference of pipe ends for a distance of not less than 4 in. [101.6 mm] shall not vary more than

Copyright ASTM International
Reproduced by IHS under license with ASTM
No reproduction or networking permitted without license from IHS
Not for Resale

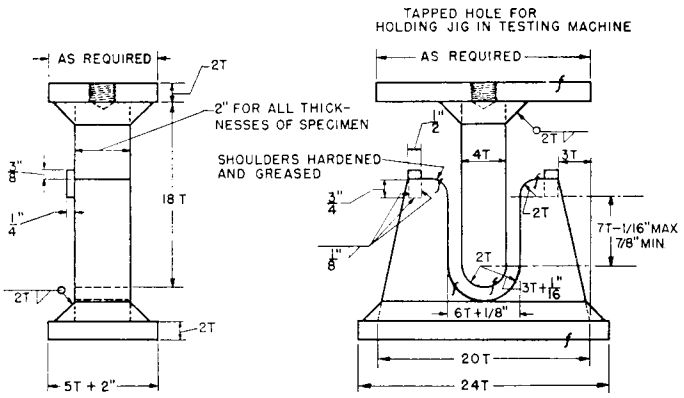

Metric Equivalents

in.	1/16	1/8	1/4	3/8	1/2	3/4	7/8	2
mm	1.6	3.2	6.4	9.5	12.7	19.0	22.2	50.8

FIG. 3 Jig for Guided-Bend Test

±60 % of the nominal wall thickness of the pipe from the nominal outside circumference based on the diameter specified, except that the tolerance shall be not less than ±3⁄16 in. [4.8 mm].

18.3 Pipe ends for use with mechanical couplings shall have tolerances within the limits required by the manufacturer of the type of coupling to be used.

18.4 Upon agreement between the purchaser and the manufacturer, the ends of the pipe may be sized within agreed-upon tolerances, if necessary to meet the requirements of special installations.

19. Production Test Specimens and Methods of Testing

19.1 The test specimens and the tests required by these specifications shall conform to those described in Test Methods and Definitions A 370.

19.2 The longitudinal tension tests specimen of the steel shall be taken from the end of the pipe in accordance with Fig. 4, or by agreement between the purchaser and the manufacturer, or may be taken from the skelp or plate, at a point which will be approximately 90° of arc from the weld in the finished pipe.

19.3 If the tension test specimen is taken transversely, the specimen shall be taken in accordance with Fig. 5.

19.4 The specimens for the reduced-section tension test of production welds shall be taken perpendicularly across the weld at the end of the pipe. The test specimens shall have the weld approximately in the middle of the specimen. The specimens shall be straightened and tested at room temperature.

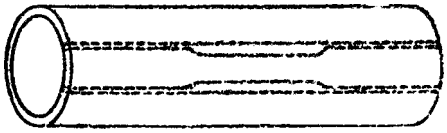

FIG. 4 Location from Which Longitudinal Tension Test Specimens Are To Be Cut from Large Diameter Tubing

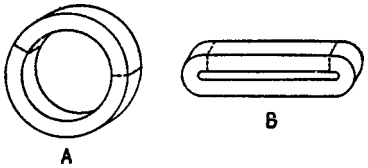

FIG. 5 Location of Transverse Tension Test Specimen in Ring Cut from Tubular Steel Products

19.5 Reduced-section tension test specimens shall be prepared in accordance with Fig. 1.

20. Inspection

20.1 The inspector representing the purchaser shall have entry, at all times while work on the contract of the purchaser is being performed, to all parts of the manufacturer's works that concern the manufacture of the material ordered. The manufacturer shall afford the inspector all reasonable facilities to satisfy him that the material is being furnished in accordance with this specification. All tests and inspection shall be made at the place of manufacture prior to shipment and, unless otherwise specified, shall be so conducted as not to interfere unnecessarily with the operation of the works. If agreed upon, the manufacturer shall notify the purchaser in time so that he may have his inspector present to witness any part of the manufacture or tests that may be desired.

20.2 *Certification*—Upon request of the purchaser in the contract or order, a manufacturer's certification that the material was manufactured and tested in accordance with this specification together with a report of the chemical and tensile tests shall be furnished.

21. Rejection

21.1 Each length of pipe received from the manufacturer may be inspected by the purchaser and, if it does not meet the requirements of this specification based on the inspection and test method as outlined in the specification, the length may be rejected and the manufacturer shall be notified. Disposition of

Copyright ASTM International
Reproduced by IHS under license with ASTM
No reproduction or networking permitted without license from IHS
Not for Resale

rejected pipe shall be a matter of agreement between the manufacturer and the purchaser.

21.2 Pipe found in fabrication or in installation to be unsuitable for the intended use, under the scope and requirements of this specification, may be set aside and the manufacturer notified. Such pipe shall be subject to mutual investigation as to the nature and severity of the deficiency and the forming or installation, or both, conditions involved. Disposition shall be a matter for agreement.

22. Protective Coating

22.1 If agreed upon between the purchaser and the manufacturer, the pipe shall be given a protective coating of the kind and in the manner specified by the purchaser.

23. Product Marking

23.1 Each section of pipe shall be marked with the manufacturer's distinguishing marking, the specification number, the grade of pipe, and other marking if required and agreed upon between the purchaser and the manufacturer.

23.2 *Bar Coding*—In addition to the requirements in 23.1, bar coding is acceptable as a supplemental identification method. The purchaser may specify in the order a specific bar coding system to be used.

24. Keywords

24.1 arc welded steel pipe; fusion welded steel pipe; steel pipe; welded steel pipe

SUMMARY OF CHANGES

Committee A01 has identified the location of selected changes to this specification since the last issue, A 139 – 00, that may impact the use of this specification. (Approved March 1, 2004)

(*1*) Revised Sections 1, 3, 7, 11, 16, 17, and 18, Table 2, and Figures 1 and 2 to include rationalized SI units, creating a combined standard.

ASTM International takes no position respecting the validity of any patent rights asserted in connection with any item mentioned in this standard. Users of this standard are expressly advised that determination of the validity of any such patent rights, and the risk of infringement of such rights, are entirely their own responsibility.

This standard is subject to revision at any time by the responsible technical committee and must be reviewed every five years and if not revised, either reapproved or withdrawn. Your comments are invited either for revision of this standard or for additional standards and should be addressed to ASTM International Headquarters. Your comments will receive careful consideration at a meeting of the responsible technical committee, which you may attend. If you feel that your comments have not received a fair hearing you should make your views known to the ASTM Committee on Standards, at the address shown below.

This standard is copyrighted by ASTM International, 100 Barr Harbor Drive, PO Box C700, West Conshohocken, PA 19428-2959, United States. Individual reprints (single or multiple copies) of this standard may be obtained by contacting ASTM at the above address or at 610-832-9585 (phone), 610-832-9555 (fax), or service@astm.org (e-mail); or through the ASTM website (www.astm.org).

Copyright ASTM International
Reproduced by IHS under license with ASTM
No reproduction or networking permitted without license from IHS
Not for Resale