STD.ASME B29.300-ENGL 1998 0759670 0614896 915

ASME B29.300-1998

AGRICULTURAL, DETACHABLE, AND PINTLE CHAINS, ATTACHMENTS, AND SPROCKETS

Incorporating ASME B29.6, B29.19, and B29.25

AN AMERICAN NATIONAL STANDARD

The American Society of Mechanical Engineers

Copyright ASME International
Provided by IHS under license with ASME
No reproduction or networking permitted without license from IHS
Not for Resale



The American Society of Mechanical Engineers

AN AMERICAN NATIONAL STANDARD

AGRICULTURAL, DETACHABLE, AND PINTLE CHAINS, ATTACHMENTS, AND SPROCKETS

Incorporating ASME B29.6, B29.19, and B29.25

ASME B29.300-1998

Copyright ASME International
Provided by IHS under license with ASME
No reproduction or networking permitted without license from IHS

Not for Resale

Date of Issuance: December 17, 1999

The 1998 edition of this Standard is being issued with an automatic addenda subscription service. The use of an addenda allows revisions made in response to public review comments or committee actions to be published as necessary. The next edition of this Standard is scheduled for publication in 2004.

ASME issues written replies to inquiries concerning interpretations of technical aspects of this Standard. The interpretations will be included with the above addenda service.

ASME is the registered trademark of The American Society of Mechanical Engineers.

This code or standard was developed under procedures accredited as meeting the criteria for American National Standards. The Consensus Committee that approved the code or standard was balanced to assure that individuals from competent and concerned interests have had an opportunity to participate. The proposed code or standard was made available for public review and comment that provides an opportunity for additional public input from industry, academia, regulatory agencies, and the public-at-large.

ASME does not "approve," "rate," or "endorse" any item, construction, proprietary device, or activity.

ASME does not take any position with respect to the validity of any patent rights asserted in connection with any items mentioned in this document, and does not undertake to insure anyone utilizing a standard against liability for infringement of any applicable letters patent, nor assume any such liability. Users of a code or standard are expressly advised that determination of the validity of any such patent rights, and the risk of infringement of such rights, is entirely their own responsibility.

Participation by federal agency representative(s) or person(s) affiliated with industry is not to be interpreted as government or industry endorsement of this code or standard.

ASME accepts responsibility for only those interpretations of this document issued in accordance with the established ASME procedures and policies, which precludes the issuance of interpretations by individuals.

No part of this document may be reproduced in any form,
in an electronic retrieval system or otherwise,
without the prior written permission of the publisher.

The American Society of Mechanical Engineers
Three Park Avenue, New York, NY 10016-5990

Copyright © 1999 by
THE AMERICAN SOCIETY OF MECHANICAL ENGINEERS
All Rights Reserved
Printed in U.S.A.

Copyright ASME International
Provided by IHS under license with ASME
No reproduction or networking permitted without license from IHS

Not for Resale

FOREWORD

On August 26, 1998, the B29 Standards committee agreed via letter ballot to consolidate and revise the following three chain standards: ASME B29.6, Steel Detachable Link Chains, Attachments, and Sprockets; ASME B29.19, Agricultural Roller Chains, Attachments, and Sprockets; and ASME B29.25, Open Barrel Steel Pintle-Type Conveyor Chains, Attachments, and Sprockets. The new Standard was designated ASME B29.300, and entitled Agricultural, Detachable, and Pintle Chains, Attachments, and Sprockets. The new Standard has been assigned to Subcommittee 4 — Agricultural, Detachable, and Pintle Chains.

The 1998 revisions of B29.6, B29.19, and B29.25 have been designed to integrate the agricultural-type chains found in each of these three Standards.

B29.6 — Steel Detachable Link Chains, Attachments, and Sprockets

Detachable link power transmission chains have been used almost exclusively by agricultural implement manufacturers for power transmission and conveyors on manure spreaders, corn pickers, planters, hay rakes, potato diggers, elevators, and many other types of machines.

The first steel detachable link chain was manufactured in 1897. This steel chain is made from special analysis steel strip, and is heat treated after forming to withstand wear and provide strength and toughness.

Early in 1950, agricultural equipment manufacturers realized the need for a standard on steel detachable link chains. In May 1951, a subcommittee of ASA Sectional Committee B29 was appointed with members from the agricultural implement industry and the steel detachable link chain industry to develop a standard for steel detachable link chains.

During the 1960 revision, certain sizes of chains and attachments were deleted from the Standard with the intent of eliminating those of low popularity that were also closely similar to other existing sizes, thereby strengthening the Standard. In addition, several popular chains, attachments, and couplers were added. Some attachment designs were slightly revised. The coupler and coupler pin designs were revised to the currently more popular style, which allows any link to be used either right-handed or left-handed.

This Standard establishes, in the main, only those dimensions that will provide for interchangeability of the chains in use without restricting the chain manufacturers in their overall design. The 1983 revision included the sprocket dimension controlling the surfaces that must properly engage or clear the chain. The 1994 edition updated the Standard to the current ANSI standards format and symbols covering chains. Number 45 and No. 67 were deleted from the Standard since they are no longer manufactured. The definition of Minimum Ultimate Tensile Strength (M.U.T.S.) was also updated.

In this edition, the symbols and sprocket information sections were revised to provide consistency throughout the consolidated B29.300 Standard.

B29.19 — Agricultural Roller Chains, Attachments, and Sprockets

Agricultural replacement roller chains, introduced around 1956, provide implement engineers with an upgrade from cast or steel detachable chains. These chains offer increased strength and durability, and can be used with the same sprockets.

Copyright ASME International
Provided by IHS under license with ASME
No reproduction or networking permitted without license from IHS
Not for Resale

The agricultural replacement roller chains are available in both drive series (A550 and A620) and conveyor series (CA550 and CA620). They have replaced No. 55 and No. 62 detachable chains in many applications and have found use in light-duty industrial conveyors.

The Standard establishes essentially only those dimensions that will provide for interchangeability of the chains in use without restricting the chain manufacturers in their overall designs.

The B29 Committee agrees that the CA550 and CA620 chains may be used on No. 55 and No. 62 detachable chain sprockets, respectively; however, the sprocket data included in this Standard is for sprockets designed specifically for CA550 and CA620 chains. The difference in sprocket design is necessary because of the difference in roller diameters.

The 1993 revision included updating to the current ANSI standards format and symbols covering chains and sprockets. Minimum Ultimate Tensile Strength (M.U.T.S.) was redefined.

The 1996 revision changed the name of the Standard from "A and CA550 and 620 Roller Chains, Attachments, and Sprockets" to "Agricultural Roller Chains, Attachments, and Sprockets." Also, two new chains for both drive series (A555 and A557) and conveyor series (CA555 and CA557), as well as several associated attachments, were added to the Standard.

In this edition, the sprocket tooth form was modified to be identical with the form used in the other two chains.

B29.25 — Open Barrel Steel Pintle-Type Conveyor Chains, Attachments, and Sprockets

The open barrel steel pintle chain was originally developed in 1962 for the agricultural implement industry. The original sizes were developed to run on the same sprockets as their detachable chain counterparts of ANSI B29.6. In later years, sizes were developed to accomodate industrial applications as well.

The steel pintle chain is primarily used as a conveyor chain and, in limited use, as a power transmission chain. Typical conveyor speeds are under 300 ft/min. Consult manufacturers for details.

The 1994 revision incorporated a restatement of the definition of Minimum Ultimate Tensile Strength (M.U.T.S.), and an addition of footnotes in Tables 3 and 4 regarding hole sizes in certain attachments.

In this edition, Tables 1 and 2 were combined for simplicity, and the sprocket tooth form was modified to be identical with the form used for the other two chains.

Suggestions for improvement of these three Standards are welcome. They should be sent to The American Society of Mechanical Engineers; Secretary, B29 Main Committee; Three Park Avenue; New York, NY 10016-5990.

ASME B29.6, ASME B29.19, and ASME B29.25 were approved as American National Standards on November 30, 1998.

Copyright ASME International
Provided by IHS under license with ASME
No reproduction or networking permitted without license from IHS
Not for Resale

ASME COMMITTEE B29
Chains, Attachments, and Sprockets for Power Transmission and Conveying

(The following is the roster of the Committee at the time of approval of this Standard.)

OFFICERS

J. L. Wright, *Chair*
R. L. Crane, *Secretary*

COMMITTEE PERSONNEL

R. L. Crane, The American Society of Mechanical Engineers
L. E. Hampel, Allied-Locke Industries, Inc., Dixon, Illinois
A. M. McCarty, Emerson Power Transmission, Ithaca, New York
D. Moore, Jeffrey Chain Co., Morristown, Tennessee
V. D. Petershack, Hitachi Maxco Ltd., Oconomowoc, Wisconsin
V. E. Skipper, *Alternate,* Hitachi Maxco Ltd., Keenesaw, Georgia
R. A. Reinfried, Conveyor Equipment Manufacturers Association, Naples, Florida
S. Rhoad, Webster Industries, Inc., Tiffin, Ohio
K. J. Smith, Drives, Inc., Fulton, Illinois
J. L. Wright, Consultant, Indianapolis, Indiana
C. G. Springman, *Alternate,* Diamond Chain Co., Indianapolis, Indiana

SUBCOMMITTEE 4 — AGRICULTURAL, DETACHABLE, AND PINTLE CHAINS

K. J. Smith, *Chair,* Drives, Inc., Fulton, Illinois
D. Moore, Jeffrey Chain Co., Morristown, Tennessee
J. L. Wright, Consultant, Indianapolis, Indiana

Copyright ASME International
Provided by IHS under license with ASME
No reproduction or networking permitted without license from IHS
Not for Resale

CORRESPONDENCE WITH THE B29 COMMITTEE

General. ASME Standards are developed and maintained with the intent to represent the consensus of concerned interests. As such, users of this Standard may interact with the Committee by requesting interpretations, proposing revisions, and attending Committee meetings. Correspondence should be addressed to:

Secretary, B29 Main Committee
The American Society of Mechanical Engineers
Three Park Avenue
New York, NY 10016-5990

Proposing Revisions. Revisions are made periodically to the Standard to incorporate changes that appear necessary or desirable, as demonstrated by the experience gained from the application of the Standard. Approved revisions will be published periodically.

The Committee welcomes proposals for revisions to this Standard. Such proposals should be as specific as possible, citing the paragraph number(s), the proposed wording, and a detailed description of the reasons for the proposal, including any pertinent documentation.

Interpretations. Upon request, the B29 Committee will render an interpretation of any requirement of the Standard. Interpretations can only be rendered in response to a written request sent to the Secretary of the B29 Main Committee.

The request for interpretation should be clear and unambiguous. It is further recommended that the inquirer submit his/her request in the following format:

Subject:	Cite the applicable paragraph number(s) and the topic of the inquiry.
Edition:	Cite the applicable edition of the Standard for which the interpretation is being requested.
Question:	Phrase the question as a request for an interpretation of a specific requirement suitable for general understanding and use, not as a request for an approval of a proprietary design or situation. The inquirer may also include any plans or drawings, which are necessary to explain the question; however, they should not contain proprietary names or information.

Requests that are not in this format will be rewritten in this format by the Committee prior to being answered, which may inadvertently change the intent of the original request.

ASME procedures provide for reconsideration of any interpretation when or if additional information that might affect an interpretation is available. Further, persons aggrieved by an interpretation may appeal to the cognizant ASME Committee or Subcommittee. ASME does not "approve," "certify," "rate," or "endorse" any item, construction, proprietary device, or activity.

Attending Committee Meetings. The B29 Main Committee regularly holds meetings, which are open to the public. Persons wishing to attend any meeting should contact the Secretary of the B29 Main Committee.

Previous page is blank

Copyright ASME International
Provided by IHS under license with ASME
No reproduction or networking permitted without license from IHS
Not for Resale

PREFACE

ORGANIZATION OF THIS DOCUMENT

This Standard compiles the following standards:

Standard	*Title*
ASME B29.6	Steel Detachable Link Chains, Attachments, and Sprockets
ASME B29.19	Agricultural Roller Chains, Attachments, and Sprockets
ASME B29.25	Open Barrel Steel Pintle-Type Conveyor Chains, Attachments, and Sprockets

ADDENDA SERVICE

This edition of ASME B29.300-1998 includes an automatic addenda subscription service up to the publication of the next edition. The addenda subscription service will include approved revisions to the existing parts.

Previous page is blank

Copyright ASME International
Provided by IHS under license with ASME
No reproduction or networking permitted without license from IHS

Not for Resale

CONTENTS

Foreword iii
Standards Committee Roster v
Correspondence With the B29 Committee vii
Preface ix

ASME B29.6 **Steel Detachable Link Chains, Attachments, and Sprockets** 1
ASME B29.19 **Agricultural Roller Chains, Attachments, and Sprockets** 17
ASME B29.25 **Open Barrel Steel Pintle-Type Conveyor Chains, Attachments, and Sprockets** 25

Previous page is blank

Copyright ASME International
Provided by IHS under license with ASME
No reproduction or networking permitted without license from IHS
Not for Resale

ASME B29.6

1 Definitions 3

2 References 3

3 General Chain Proportions and Designations 3

4 Attachments 3

5 Sprockets 3

Figures

1 Steel Detachable Link Chain 4
2 Link 4
3 Sprocket Tooth Form 15

Tables

1 Plain Link 5
2 A1 Attachment 6
3 A2 Attachment 7
4 C1 Attachment 8
5 C15 Attachment 8
6 G27 Attachment 9
7 HB4 Attachment 10
8 K1 Attachment 10
9 SD Attachment 11
10 SH Attachment 11
11 AS Attachment 12
12 Coupler Link 13
13 Coupler Pin 14
14 Sprockets — Maximum Eccentricity and Face Runout at Root Diameter 16
15 Sprocket Factors 16

Copyright ASME International
Provided by IHS under license with ASME
No reproduction or networking permitted without license from IHS
Not for Resale

STEEL DETACHABLE LINK CHAINS, ATTACHMENTS, AND SPROCKETS

1 DEFINITIONS

link: a one-piece steel link consisting of end bar *A*, hook *B*, and two sidebars *C-C* (see Fig. 2 of B29.6).

measuring load: the load under which a dry or lightly lubricated chain should be measured for length.

steel detachable link chain: a series of successively assembled steel links in which the end bars articulate inside the hook. The chain is detached by flexing it and driving the end bar out of the adjoining hook (see Fig. 1 of B29.6).

2 REFERENCES

The following is a list of publications referenced in this Standard.

Chains for Power Transmission and Material Handling

Publisher: American Chain Association (ACA), 6724 Lone Oak Boulevard, Naples, FL 34109

3 GENERAL CHAIN PROPORTIONS AND DESIGNATIONS

3.1 Minimum Ultimate Tensile Strength

The Minimum Ultimate Tensile Strength (M.U.T.S.), for chain covered by this Standard, is the minimum force at which an unused, undamaged chain could fail when subjected to a single tensile loading test.

WARNING: The Minimum Ultimate Tensile Strength is NOT a "working load." The M.U.T.S. greatly exceeds the maximum force that may be safely applied to the chain.

(a) Test Procedure. A tensile force is slowly applied, in a uniaxial direction, to the ends of the chain sample.

(b) The tensile test is a destructive test. Even though the chain may not visibly fail when subjected to the M.U.T.S., it will have been damaged and will be unfit for service.

CAUTION: This load is beyond the yield strength of the chain and would render the chain unsuitable for application.

(c) For application guidance, consult the manufacturers' catalogs or the American Chain Association's handbook, *Chains for Power Transmission and Material Handling.*

4 ATTACHMENTS

See Tables 1 through 11 of B29.6 for tolerances and dimensions for the following attachments: plain link, A1, A2, AS, C1, C15, G27, HB4, K1, SD, and SH.

See Table 12 of B29.6 for coupler link information and Table 13 of B29.6 for coupler pin information.

5 SPROCKETS

5.1 General Information

Sprockets for use with steel detachable chains are usually made of cast or wrought ferrous material. Wear resistance is frequently designed into the material of the tooth faces. Sprocket bodies are of many configurations (e.g., plate, arm, web, flat, or dished). When hubs containing the sprocket mounting bore are employed, they may project from either side or from both sides of the sprocket body.

This Standard covers only the dimensions controlling the surfaces that must properly engage or clear the chain.

Dimensions are given in a decimal inch system. The metric dimensions given are recommended conversions from the decimal inch system. In some cases the conversion is not exact; the decimal inch system is therefore to be taken as the base control dimension.

Sprockets with standard tooth forms are capable of transmitting chain loads in systems operating under a wide variety of conditions such as the following combination:

(a) maximum peak tension in chain as great as 0.20 of the ultimate breaking strength of the chain;

(b) slack strand tensions as small as 0.25% of the working tension in the chain;

(c) friction between the chain and the sprocket tooth faces as low as 10%; and

(d) the number of chain links in contact with the periphery of the sprocket as few as $0.5 \times (N - 1)$.

Previous page is blank

Copyright ASME International
Provided by IHS under license with ASME
No reproduction or networking permitted without license from IHS
Not for Resale

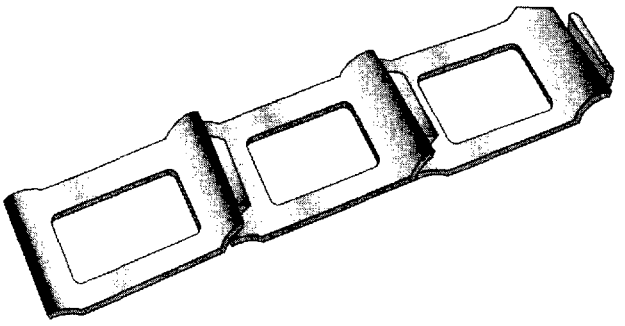

FIG. 1 STEEL DETACHABLE LINK CHAIN

Individually, the above limits are not absolute. Variations may be accepted in each of them provided commensurate modifications are made in other limits.

5.2 Sprocket Tooth Form

The elements of the tooth profiles for sprockets for standard chains are given in Fig. 3 and Tables 14 and 15 of B29.6.

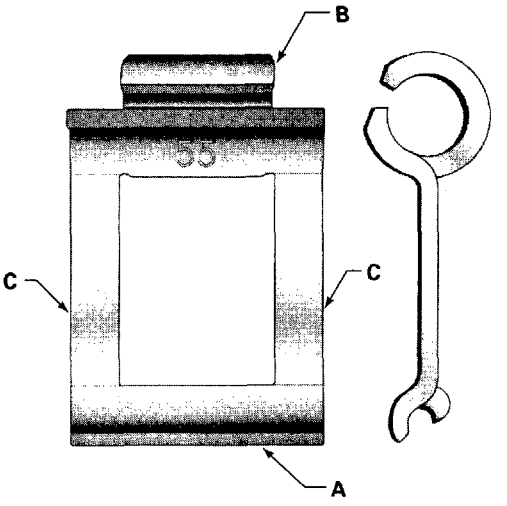

FIG. 2 LINK

Maximum tooth thickness t may not exceed (0.95 D minus actual sideface oscillation), where D equals hook width of chain.

Copyright ASME International
Provided by IHS under license with ASME
No reproduction or networking permitted without license from IHS

Not for Resale

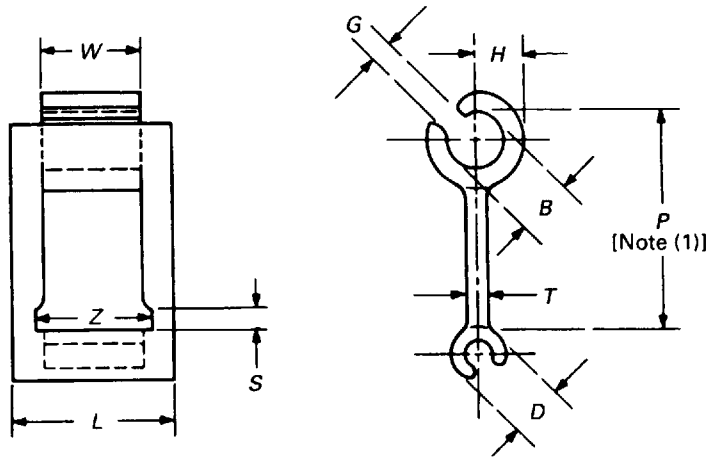

TABLE 1 PLAIN LINK

Chain No.	B, Min.	D, Max.	G, Max.	H +0.000 −0.030	L +0.094 −0.031	P [Note (1)]	S, Min.	T	Z, Min.	W +0.012 −0.008	Measuring Load, lb [Note (2)]	M.U.T.S., lb [Note (2)]
	Dimensions, in.											
25	0.200	0.190	0.063	0.180	0.703	0.904	0.078	0.073 ± 0.006	0.438	0.422	50	760
32	0.250	0.240	0.080	0.230	0.937	1.157	1.100	0.090 ± 0.006	0.610	0.594	50	1320
32W	0.250	0.240	0.085	0.232	1.062	1.157	0.100	0.095 ± 0.006	0.610	0.594	50	1320
42	0.305	0.295	0.095	0.265	1.219	1.375	0.110	0.105 ± 0.006	0.800	0.781	50	1680
51	0.250	0.240	0.090	0.232	1.094	1.133	0.105	1.100 ± 0.006	0.720	0.703	50	1680
52	0.330	0.320	0.110	0.303	1.406	1.508	0.125	0.120 ± 0.006	0.860	0.844	50	2160
55	0.345	0.335	0.115	0.320	1.281	1.630	0.130	0.125 ± 0.006	0.813	0.796	50	2240
62	0.360	0.355	0.138	0.335	1.562	1.654	0.155	0.148 ± 0.007	1.002	0.984	50	3520
62A	0.360	0.355	0.160	0.358	1.937	1.664	0.180	0.170 ± 0.007	1.002	0.984	50	4000
62H	0.360	0.355	0.145	0.343	1.875	1.654	0.160	0.155 ± 0.007	1.002	0.984	50	3600
67H	0.510	0.500	0.175	0.448	1.875	2.313	0.203	0.185 ± 0.007	1.110	1.093	100	4400
67XH	0.500	0.400	0.190	0.448	1.875	2.313	0.205	0.200 ± 0.007	1.110	1.093	100	5500
72	0.455	0.445	0.160	0.409	1.937	2.025	0.175	0.170 ± 0.007	1.110	1.093	100	4000
	Dimensions, mm											
25	5.08	4.83	1.60	4.57	17.86	22.96	1.98	1.85 ± 0.15	11.12	10.72	0.22	3.38
32	6.35	6.10	2.03	5.84	23.81	29.39	2.54	2.28 + 0.15	15.49	15.08	0.22	5.87
32W	6.35	6.10	2.16	5.84	27.00	29.39	2.54	2.41 ± 0.15	15.49	15.08	0.22	5.87
42	7.75	7.49	2.41	6.73	30.95	34.92	2.79	2.67 ± 0.15	20.32	19.34	0.22	7.47
51	6.35	6.10	2.29	5.89	27.79	28.78	2.67	2.54 ± 0.15	18.29	17.86	0.22	7.47
52	8.38	8.13	2.79	7.70	35.71	38.30	3.17	3.05 ± 0.15	21.84	21.44	0.22	9.61
55	8.76	8.51	2.92	8.13	32.54	41.40	3.30	3.17 ± 0.15	20.65	20.22	0.22	9.96
62	9.14	9.02	3.51	8.51	39.69	42.01	3.94	3.76 ± 0.18	25.45	24.94	0.22	15.66
62A	9.14	9.02	4.06	9.09	49.21	42.26	4.57	4.32 ± 0.18	25.45	24.99	0.22	17.79
62H	9.14	9.02	3.68	8.71	47.62	42.01	4.06	3.94 ± 0.18	25.45	24.99	0.22	16.01
67H	12.95	12.70	4.44	11.38	47.62	58.75	5.16	4.70 ± 0.18	28.19	27.76	0.44	19.57
67XH	12.70	10.16	4.83	11.38	47.62	58.75	5.21	5.08 ± 0.18	28.19	27.76	0.44	24.46
72	11.56	11.30	4.06	10.39	49.21	51.43	4.44	4.32 ± 0.18	28.19	27.76	0.44	17.79

NOTES:
(1) Assembled chain pitch limits for an approximately 10 ft (3 m) strand are + 0.375 in. (+ 9.52 mm) maximum, − 0.125 in. (− 3.18 mm) minimum.
(2) For definitions, see Section 1.

Copyright ASME International
Provided by IHS under license with ASME
No reproduction or networking permitted without license from IHS

Not for Resale

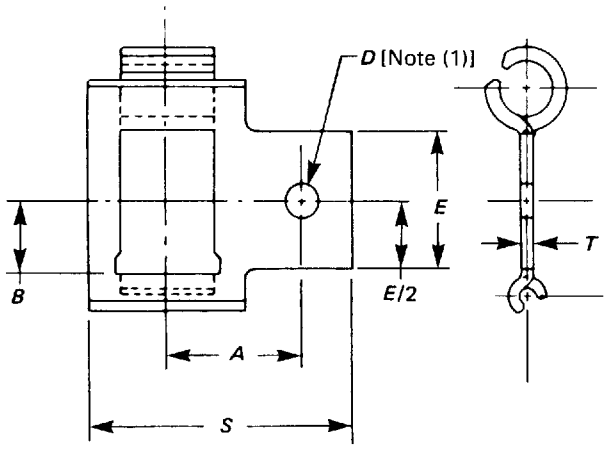

GENERAL NOTE: May be used either right-handedly or left-handedly; right-handed use is shown.

TABLE 2 A1 ATTACHMENT

Chain No.	A ± 0.016	B ± 0.031	D ± 0.016 − 0.000 [Note (1)]	E ± 0.031	S + 0.094 − 0.031	T
			Dimensions, in.			
55	1.125	0.594	0.266	1.156	2.188	0.125 ± 0.006
62	1.375	0.563	0.266	1.250	2.625	0.148 ± 0.007
			Dimensions, mm			
Chain No.	**A ± 0.40**	**B ± 0.79**	**D ± 0.40 − 0.00 [Note (1)]**	**E ± 0.79**	**S + 2.38 − 0.79**	**T**
55	28.58	15.08	6.75	29.36	55.56	3.18 ± 0.15
62	34.92	14.29	6.75	31.75	66.68	3.76 ± 0.18

NOTE:
(1) Holes are sized for use with rivets.

Copyright ASME International
Provided by IHS under license with ASME
No reproduction or networking permitted without license from IHS
Not for Resale

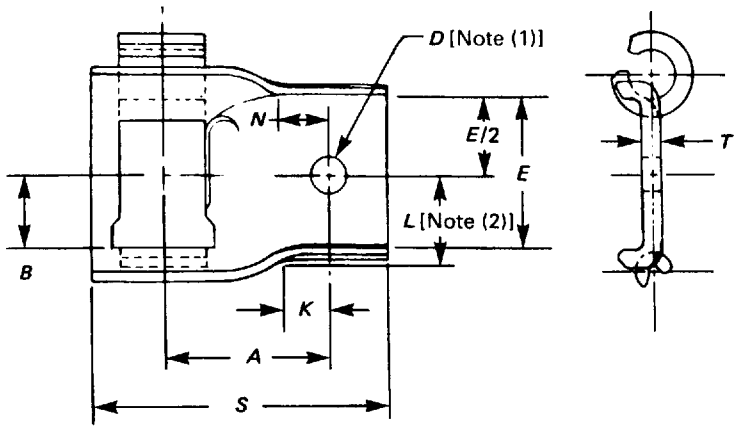

GENERAL NOTE: May be used either right-handedly or left-handedly; right-handed use is shown.

TABLE 3 A2 ATTACHMENT

	Dimensions, in.								
Chain No.	*A* ± 0.016	*B*	*D* + 0.016 − 0.000 [Note (1)]	*E* + 0.063 − 0.000	*K*, Min.	*L*, Max. [Note (2)]	*N*, Min.	*S* + 0.094 − 0.031	*T*
55	1.453	0.625	0.266	1.250	0.625	0.875	0.500	2.625	0.125 ± 0.006
62	1.563	0.625	0.266	1.250	0.438	0.875	0.438	3.000	0.148 ± 0.007
62H	1.563	0.625	0.391	1.250	0.375	0.875	0.375	3.250	0.155 ± 0.007

	Dimensions, mm								
Chain No.	*A* ± 0.40	*B*	*D* + 0.40 − 0.00 [Note (1)]	*E* + 1.59 − 0.00	*K*, Min.	*L*, Max.	*N*, Min.	*S* + 2.38 − 0.79	*T*
55	36.91	15.88	6.75	31.75	15.87	22.22	12.70	66.67	3.18 ± 0.15
62	39.69	15.88	6.75	31.75	11.11	22.22	11.11	76.20	3.76 ± 0.18
62H	39.69	15.88	9.92	31.75	9.52	22.22	9.52	82.55	3.94 ± 0.18

NOTES:
(1) Holes are sized for use with rivets.
(2) 2*L* = Minimum inside dimensions of channel flight.

Copyright ASME International
Provided by IHS under license with ASME
No reproduction or networking permitted without license from IHS

Not for Resale

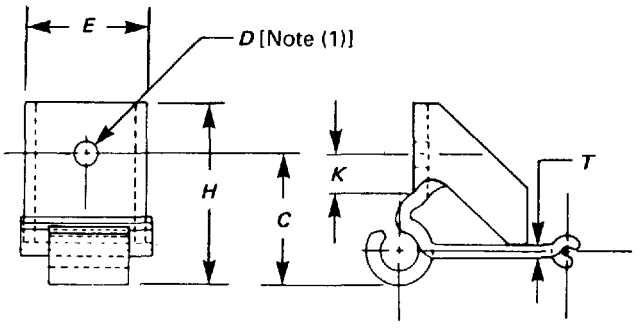

GENERAL NOTE: This illustration applies to Tables 4 and 5 below.

TABLE 4 C1 ATTACHMENT

	Dimensions, in.					
Chain No.	*C* + 0.031 − 0.000	*D* + 0.016 − 0.000 [Note (1)]	*E*, Max.	*H*, Max.	*K* + 0.063 − 0.000	*T*
55	1.188	0.266	1.313	1.750	0.438	0.125 ± 0.006
62	1.281	0.266	1.625	1.781	0.469	0.148 ± 0.007
	Dimensions, mm					
Chain No.	*C* + 0.79 − 0.00	*D* + 0.40 − 0.00 [Note (1)]	*E*, Max.	*H*, Max.	*K* + 1.59 − 0.00	*T*
55	30.16	6.75	33.34	44.45	11.11	3.18 ± 0.15
62	32.54	6.75	41.28	45.24	11.91	3.76 ± 0.18

GENERAL NOTE: Dimensions apply to both unit and weldment construction.
NOTE:
(1) Holes are sized for use with rivets.

TABLE 5 C15 ATTACHMENT

	Dimensions, in.					
Chain No.	*C* + 0.031 − 0.000	*D* + 0.016 − 0.000 [Note (1)]	*E*, Max.	*H*, Max.	*K* + 0.063 − 0.000	*T*
62	1.188	0.266	1.626	1.781	0.375	0.148 ± 0.007
	Dimensions, mm					
Chain No.	*C* + 0.79 − 0.00	*D* + 0.40 − 0.00 [Note (1)]	*E*, Max.	*H*, Max.	*K* + 1.59 − 0.00	*T*
62	30.16	96.75	41.28	45.24	11.91	3.76 ± 0.18

GENERAL NOTE: Dimensions apply to both unit and weldment construction.
NOTE:
(1) Holes are sized for use with rivets.

Copyright ASME International
Provided by IHS under license with ASME
No reproduction or networking permitted without license from IHS
Not for Resale

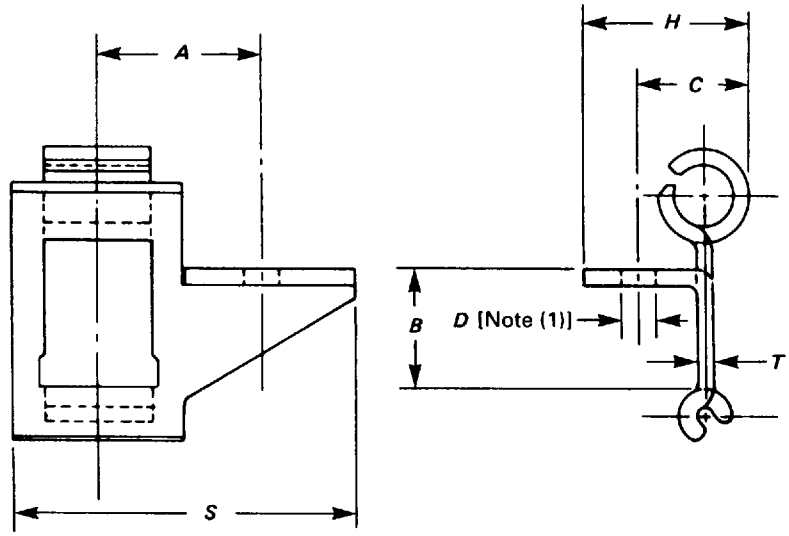

GENERAL NOTE: May be used either right-handedly or left-handedly; right-handed use is shown.

TABLE 6 G27 ATTACHMENT

Chain No.	A +0.016	B +0.063	C +0.031 −0.000	D +0.016 −0.000 [Note (1)]	H, Max.	S +0.094 −0.031	T
	Dimensions, in.						
55	1.250	1.000	0.813	0.266	1.312	2.625	0.125 ± 0.006
62	1.312	1.125	0.625	0.266	1.188	2.625	0.148 ± 0.007
	Dimensions, mm						
55	31.75	25.40	20.64	6.75	33.34	66.68	3.18 ± 0.15
62	33.34	28.58	15.88	6.75	30.16	66.68	3.76 ± 0.18

NOTE:
(1) Holes are sized for use with rivets.

Copyright ASME International
Provided by IHS under license with ASME
No reproduction or networking permitted without license from IHS

Not for Resale

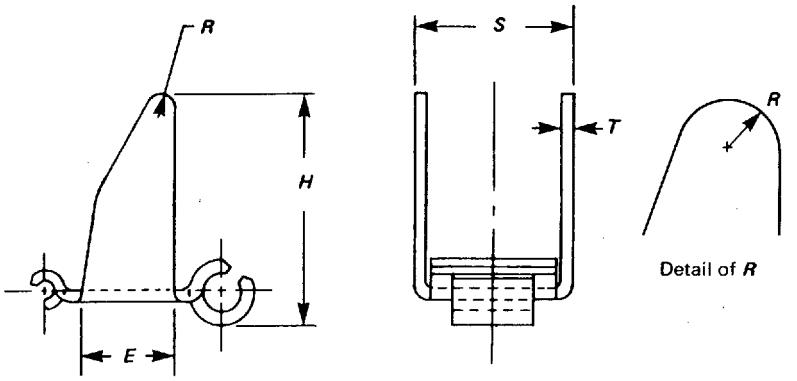

TABLE 7 HB4 ATTACHMENT

Chain No.	Dimensions, in. E ± 0.031	H ± 0.063	R, Max.	S, Max.	T	Dimensions, mm E ± 0.79	H ± 0.159	R, Max.	S, Max.	T
55	0.875	2.188	0.188	1.719	0.125 ± 0.006	22.22	55.56	4.76	43.66	3.18 ± 0.15
62	0.875	2.188	0.188	2.031	0.148 ± 0.007	22.22	55.56	4.76	51.60	3.76 ± 0.18

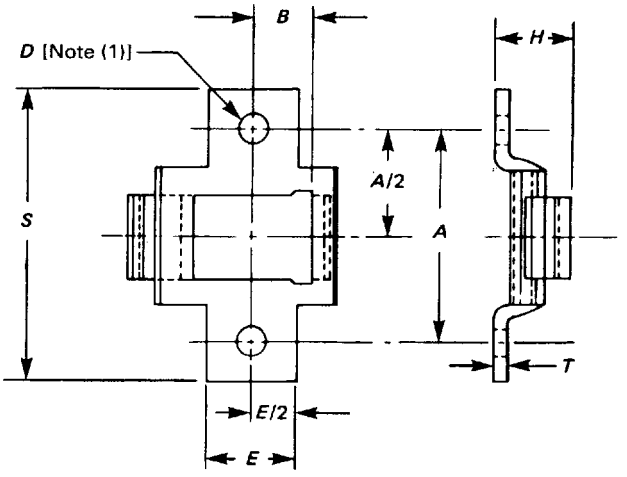

TABLE 8 K1 ATTACHMENT

Chain No.	Dimensions, in. A ± 0.016	B ± 0.063	D + 0.016/− 0.000 [Note (1)]	E	H ± 0.031	S ± 0.063	T
55	2.000	0.625	0.266	0.875	0.750	2.750	0.125 ± 0.006
62	2.469	0.625	0.266	0.875	0.797	3.250	0.148 ± 0.007

Chain No.	Dimensions, mm A ± 0.40	B ± 1.59	D + 0.40/− 0.00 [Note (1)]	E	H, ± 0.79	S ± 1.59	T
55	50.80	15.88	6.75	22.22	19.05	69.85	3.18 ± 0.15
62	62.71	15.88	6.75	22.22	20.24	82.55	3.76 ± 0.18

NOTE:
(1) Holes are sized for use with rivets.

Copyright ASME International
Provided by IHS under license with ASME
No reproduction or networking permitted without license from IHS
Not for Resale

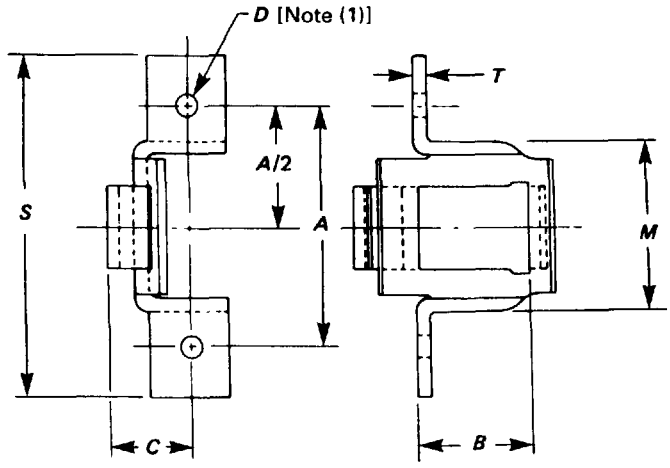

GENERAL NOTE: This illustration applies to Tables 9 and 10 below.

TABLE 9 SH ATTACHMENT

Chain No.	A ± 0.031	B ± 0.063	C + 0.031/− 0.000	D + 0.016/− 0.000 [Note (1)]	M, Max.	S ± 0.063	T
	Dimensions, in.						
55	2.250	1.125	0.781	0.281	1.750	3.250	0.125 ± 0.006
62	2.750	1.125	0.781	0.266	2.000	3.625	0.148 ± 0.007
	Dimensions, mm						
Chain No.	A ± 0.79	B ± 1.59	C + 0.79/− 0.00	D + 0.40/− 0.00 [Note (1)]	M, Max.	S ± 1.59	T
55	57.15	28.57	19.84	7.14	44.45	82.55	3.18 ± 0.15
62	69.85	28.57	19.84	6.75	50.80	50.80	3.76 ± 0.18

NOTE:
(1) Holes are sized for use with rivets.

TABLE 10 SD ATTACHMENT

Chain No.	A ± 0.031	B ± 0.063	C + 0.031/− 0.000	D + 0.016/− 0.000 [Note (1)]	M, Max.	S ± 0.063	T
	Dimensions, in.						
32W	2.125	0.813	0.625	0.203	1.453	2.813	0.095 ± 0.006
55	2.250	1.125	0.781	0.234	1.750	3.250	0.125 ± 0.006
	Dimensions, mm						
Chain No.	A ± 0.79	B ± 1.59	C + 0.79/− 0.00	D + 0.40/− 0.00 [Note (1)]	M, Max.	S ± 1.59	T
32W	53.97	20.64	15.88	5.16	36.91	71.44	2.41 ± 0.15
55	57.15	28.57	19.84	5.95	44.45	82.55	3.18 ± 0.15

NOTE:
(1) Holes are sized for use with rivets.

Copyright ASME International
Provided by IHS under license with ASME
No reproduction or networking permitted without license from IHS

Not for Resale

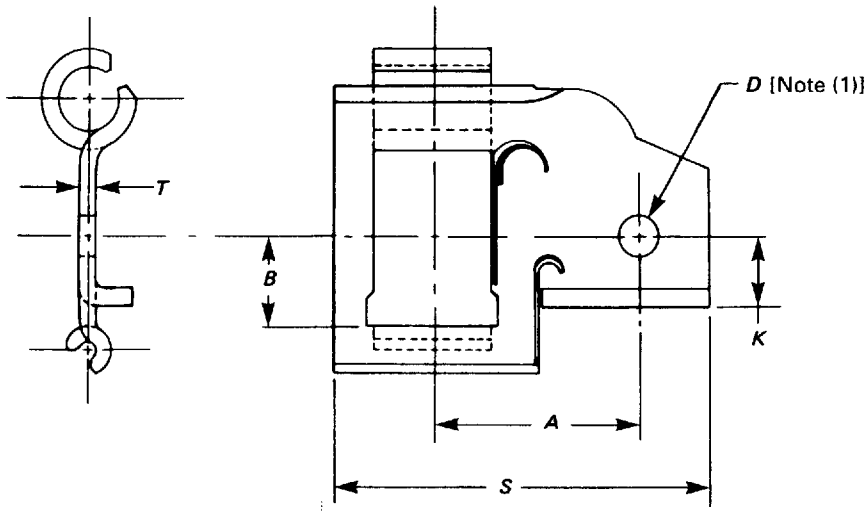

GENERAL NOTE: May be used either right-handedly or left-handedly; right-handed use is shown.

TABLE 11 AS ATTACHMENT

Chain No.	A ± 0.031	B + 0.031 − 0.000	D + 0.016 − 0.000 [Note (1)]	K ± 0.016	S ± 0.094 − 0.031	T
	Dimensions, in.					
67H	2.031	0.688	0.328	0.562	3.500	0.185 ± 0.007
67XH	2.031	0.688	0.328	0.562	3.500	0.200 ± 0.007
	Dimensions, mm					
67H	51.59	17.46	8.33	14.29	88.90	4.70 ± 0.18
67XH	51.59	17.46	8.33	14.29	88.90	5.08 ± 0.18

NOTE:
(1) Holes are sized for use with rivets.

Copyright ASME International
Provided by IHS under license with ASME
No reproduction or networking permitted without license from IHS
Not for Resale

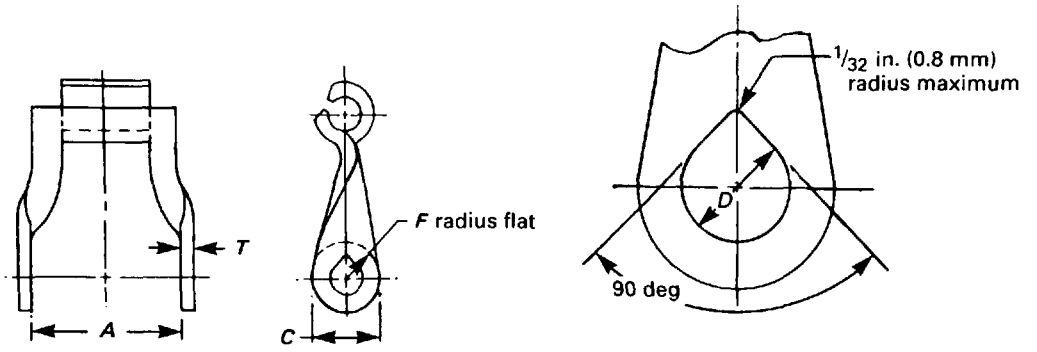

View of Both Sides

TABLE 12 COUPLER LINK

Chain No.	Dimensions, in. A +0.031 −0.000	C +0.063 −0.000	D +0.008 −0.000	F, Min.	T ±0.006	Dimensions, mm A +0.79 −0.00	C +1.59 −0.00	D +0.20 −0.00	F, Min.	T ±0.15
32W	1.125	0.469	0.234	0.232	0.095	28.57	11.91	5.94	5.89	2.41
42	1.313	0.609	0.292	0.265	0.105	33.34	15.48	7.42	6.73	2.67
52	1.469	0.625	0.328	0.303	0.125	37.31	15.87	8.33	7.70	3.18
55	1.375	0.625	0.328	0.320	0.125	34.92	15.87	8.33	8.13	3.18
62	1.609	0.625	0.344	0.335	0.148	40.88	15.87	8.74	8.51	3.76
62A	2.031	0.672	0.359	0.350	0.170	51.59	17.06	9.12	8.90	4.32
62H	1.938	0.750	0.359	0.343	0.155	49.21	19.05	9.12	8.71	3.94
67H	1.938	0.813	0.437	0.448	0.185	49.21	20.64	11.01	11.38	4.70

Copyright ASME International
Provided by IHS under license with ASME
No reproduction or networking permitted without license from IHS

Not for Resale

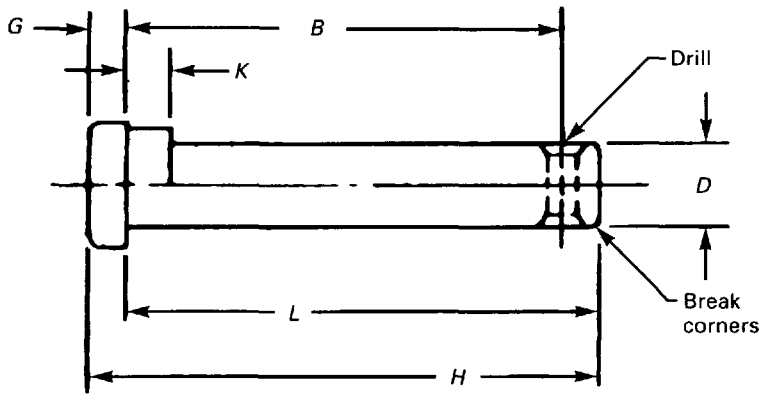

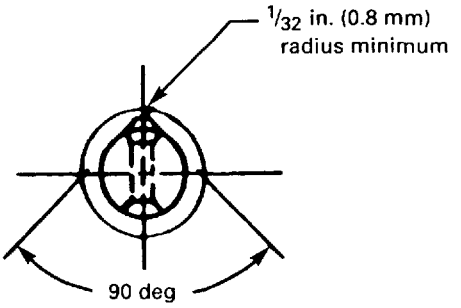

TABLE 13 COUPLER PIN

Chain No.	B ± 0.016	D	Drill	G, Max.	H, Max.	L ± 0.016	K, Max.
	Dimensions, in.						
32W	1.375	0.233/0.227	#51 (0.067)	0.063	1.547	1.484	0.095
42	1.578	0.291/0.285	#39 (0.0995)	0.094	1.797	1.703	0.105
52	1.797	0.327/0.321	#39 (0.0995)	0.094	2.016	1.922	0.120
55	1.703	0.327/0.321	#39 (0.0995)	0.141	1.969	1.813	0.156
62	2.000	0.343/0.337	#39 (0.0995)	0.141	2.281	2.125	0.187
62A	2.438	0.353/0.347	#39 (0.0995)	0.141	2.359	2.563	0.187
62H	2.344	0.353/0.347	#39 (0.0995)	0.141	2.641	2.484	0.187
67H	2.406	0.436/0.430	#29 (0.136)	0.125	2.688	2.563	0.185
	Dimensions, mm						
Chain No.	B ± 0.40	D	Drill	G, Max.	H, Max.	L ± 0.40	K, Max.
32W	34.92	5.92/5.80	#51 (1.70)	1.59	39.29	37.70	2.41
42	40.08	7.40/7.24	#39 (2.53)	2.38	45.64	43.26	2.67
52	45.64	8.31/8.15	#39 (2.53)	2.38	51.20	48.82	3.05
55	43.26	8.31/8.15	#39 (2.53)	3.57	50.00	46.04	3.96
62	50.80	8.71/8.56	#39 (2.53)	3.57	57.94	53.97	4.75
62A	61.91	8.97/8.81	#39 (2.53)	3.57	69.06	65.09	4.75
62H	59.53	8.97/8.81	#39 (2.53)	3.57	67.07	63.10	4.75
67H	61.12	11.07/10.92	#29 (3.18)	3.18	68.26	65.09	4.70

Copyright ASME International
Provided by IHS under license with ASME
No reproduction or networking permitted without license from IHS
Not for Resale

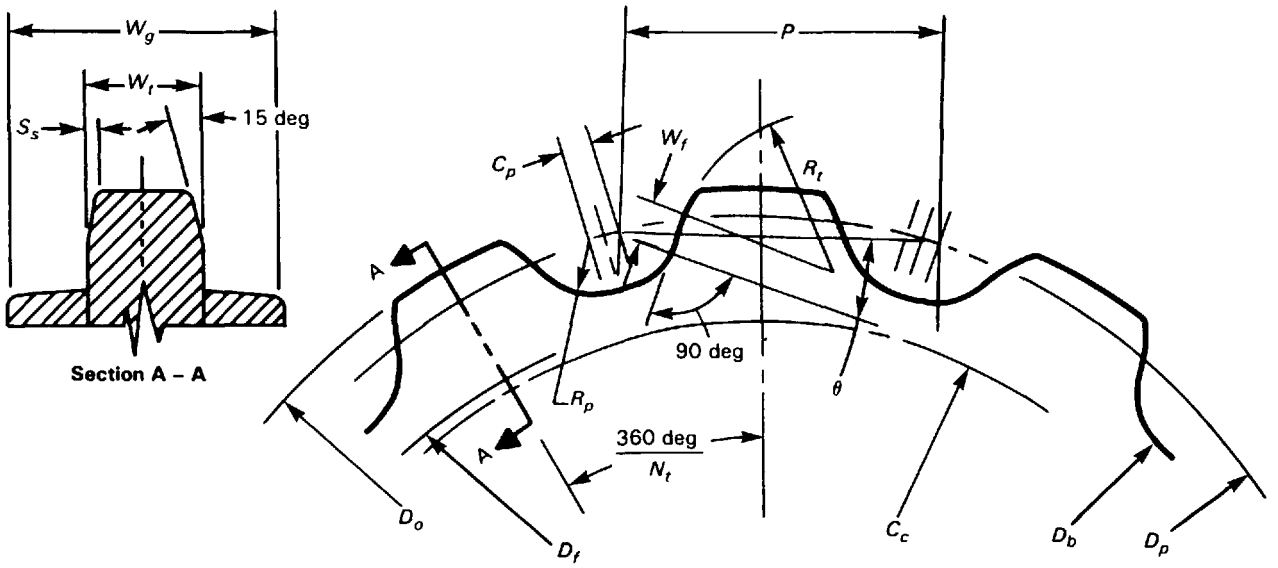

The elements of a chain sprocket and the tooth form may be determined by the following:

Pitch diameter	$D_p = P \times D_{pf}$
Bottom diameter maximum [Note (1)]	$D_b = (P \times D_{pf}) - (H + 0.04P)$
Chain clearance circle [Note (2)]	$C_c = P(C_{cf} - 0.05) - F$ max.
Outside diameter [Note (3)]	$D_o = (P \times C_{cf}) + F$ max.
Pitch line clearance	$C_p = P \times 0.10$ to $P \times 0.15$
Flange (annular ring) diameter	$D_f = (P \times C) - F$ max.
Pitch diameter factor	$D_{pf} = \csc (180/N_t)$
Clearance circle and outside diameter factor	$C_{cf} = \cot (180/N_t)$
Chain backing	$G = H/2$
Pressure angle	θ = See Table 8
Working face [Note (4)]	$W_f = 0.01 \times P \times N_t$
Pocket radius maximum [Note (1)]	$R_p = H/3$
Topping radius	$R_t = 0.5 \times P$
Flange width minimum	$^*W_g = (1.2 \times W) + (2.0 \times T)$
Tooth width	W_t max. = 0.95 W min. of chain
Side slope	S_s = approx. $0.12 \times W_t$, not to exceed 0.38 in. (9.6 mm)

* = If a flange is used.

The symbols represent:

C_{cf} = clearance circle and outside diameter factor (see Table 8)
D_{pf} = pitch diameter factor (see Table 8)
F = chain height maximum (see Table 1)
H = chain roller diameter (see Table 1)
N_t = number of teeth
P = chain pitch

NOTES:
(1) Bottom diameters and pocket radii must not exceed the maximums obtained from these formulas. Oversize dimensions cause improper chain and sprocket action and excessive chain loads.
(2) No portion of hub, beads, lugs, or fillets shall extend beyond this circle in the sidebar zone.
(3) Outside diameter may be increased to give a full height tooth when top of chain is clear of flights, pans, buckets, etc.
(4) Above 36 teeth, consult chain manufacturer for proper sprocket design.

FIG. 3 SPROCKET TOOTH FORM

Copyright ASME International
Provided by IHS under license with ASME
No reproduction or networking permitted without license from IHS
Not for Resale

TABLE 14 SPROCKETS — MAXIMUM ECCENTRICITY AND FACE RUNOUT AT ROOT DIAMETER

Pitch Diameter						Maximum Face Runout TIR		Maximum Eccentricity TIR	
in.			mm						
Over		Including	Over		Including	in.	mm	in.	mm
0	up to	12	0	up to	305	0.06	1.52	0.09	2.29
12	up to	24	305	up to	610	0.12	3.05	0.15	3.81

TABLE 15 SPROCKET FACTORS

C_{cf}	D_{pf}	N_t	θ, deg
1.73	2.000	6	9
2.07	2.304	7	10
2.41	2.613	8	12
2.74	2.923	9	13
3.07	3.236	10	15
3.40	3.549	11	16
3.73	3.863	12	17
4.05	4.178	13	18
4.38	4.494	14	19
4.70	4.809	15	20
5.03	5.125	16	21
5.35	5.442	17	22
5.67	5.758	18	22
5.99	6.075	19	23
6.31	6.392	20	23
6.63	6.709	21	24
6.95	7.026	22	24
7.27	7.343	23	24
7.59	7.661	24	25
7.91	7.978	25	25
8.23	8.296	26	25
8.55	8.613	27	25
8.87	8.931	28	26
9.19	9.249	29	26
9.51	9.566	30	26
9.83	9.884	31	26
10.15	10.202	32	27
10.47	10.520	33	27
10.79	10.837	34	27
11.11	11.155	35	27
11.43	11.473	36	27

Copyright ASME International
Provided by IHS under license with ASME
No reproduction or networking permitted without license from IHS

Not for Resale

ASME B29.19

1 Scope 19

2 References 19

3 General Chain Proportions and Designations 19

4 Chain Dimensions 19

5 Attachment Dimensions 19

6 Sprockets 19

Figure

1 Agricultural Roller Chains (A and CA Types) 20

Tables

1 General Chain Dimensions 21
2 C11E, C13E, and C6E Attachments 22
3 C17E Attachment 22
4 A19 Attachment 23
5 F14 Attachment 23
6 K39M Attachment 24

Copyright ASME International
Provided by IHS under license with ASME
No reproduction or networking permitted without license from IHS
Not for Resale

AGRICULTURAL ROLLER CHAINS, ATTACHMENTS, AND SPROCKETS

1 SCOPE

This Standard covers a series of alternately assembled roller links and pin links in which the pins articulate inside the bushings and the rollers are free to turn on the bushings (see Fig. 1 of B29.19). The pitch of the sidebars is derived from the pitch of B29.6 series chain.[1] Pin link plates and roller link plates have identical contours. Chain having embossments is intended for use when operated on its side.

2 REFERENCES

The following is a list of publications referenced in this Standard.

Chains for Power Transmission and Material Handling

Publisher: American Chain Association (ACA), 6724 Lone Oak Boulevard, Naples, FL 34109

3 GENERAL CHAIN PROPORTIONS AND DESIGNATIONS

3.1 Minimum Ultimate Tensile Strength

The Minimum Ultimate Tensile Strength (M.U.T.S.), for chain covered by this Standard, is the minimum force at which an unused, undamaged chain could fail when subjected to a single tensile loading test.

WARNING: The Minimum Ultimate Tensile Strength is NOT a "working load." The M.U.T.S. greatly exceeds the maximum force that may be safely applied to the chain.

(a) Test Procedure. A tensile force is slowly applied, in uniaxial direction, to the ends of the chain sample.

(b) The tensile test is a destructive test. Even though the chain may not visibly fail when subjected to the M.U.T.S., it will have been damaged and will be unfit for service.

CAUTION: This load is beyond the yield strength of the chain and would render the chain unsuitable for application.

(c) For application guidance, consult the manufacturers' catalogs or the American Chain Association's handbook, *Chains for Power Transmission and Material Handling.*

3.2 Measuring Load

This is the load under which a dry or lightly lubricated chain should be measured for length. Length measurements are to be taken over a length of at least 24 in. (600 mm).

3.3 Strand Length Tolerance

New chains under measuring load may be over standard measuring length up to 0.3%, but must not be under the nominal length.

3.4 Dimensions of Chain Links

To assure interchangeability of links as produced by the different makers of chain, standard maximum and minimum dimensions are listed. They are not actual dimensions used in manufacturing, but rather the limiting dimensions, maximum or minimum, required to assure the desired interchangeability. All dimensions are given in a decimal inch system. The metric equivalent dimensions are for reference only.

4 CHAIN DIMENSIONS

See Table 1 of B29.19.

5 ATTACHMENT DIMENSIONS

See Tables 2 through 6 of B29.19.

6 SPROCKETS

6.1 General Information

For sprocket maximum eccentricity and face runout at root diameter, see Table 14 of B29.6.[1] For sprocket factors, see Table 15 of B29.6.[1]

6.2 Sprocket Tooth Form

See Fig. 3 of B29.6.[1]

[1] The B29.6 Standard is contained within this edition of the B29.300 Standard.

Previous page is blank

Copyright ASME International
Provided by IHS under license with ASME
No reproduction or networking permitted without license from IHS
Not for Resale

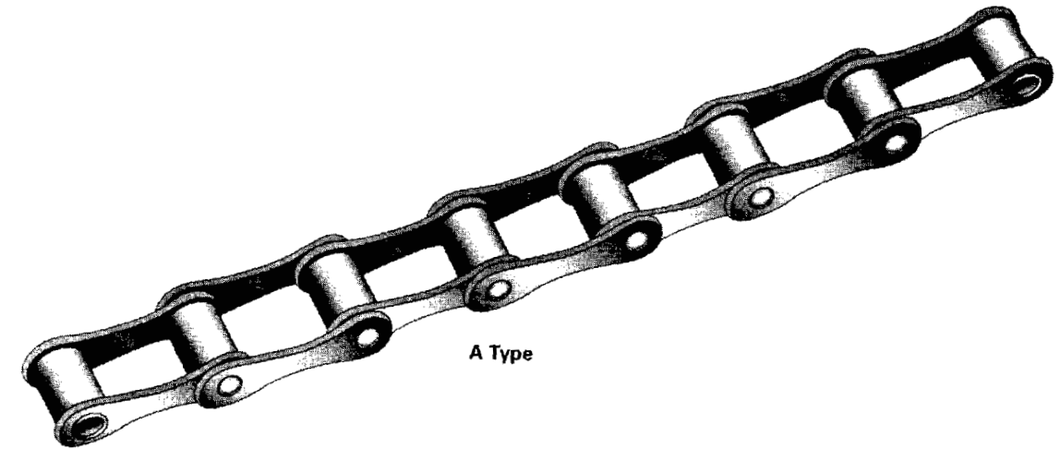

A Type

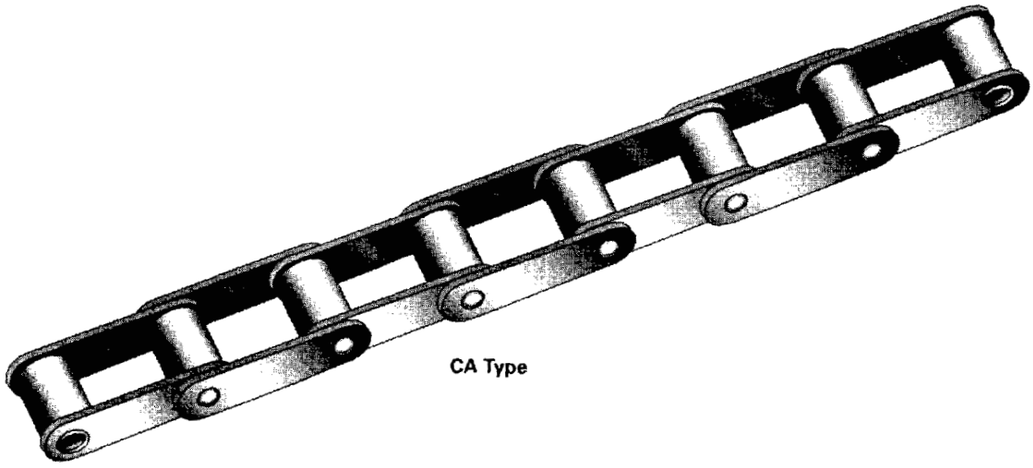

CA Type

FIG. 1 AGRICULTURAL ROLLER CHAINS (A AND CA TYPES)

Copyright ASME International
Provided by IHS under license with ASME
No reproduction or networking permitted without license from IHS

Not for Resale

Copyright ASME International
Provided by IHS under license with ASME
No reproduction or networking permitted without license from IHS

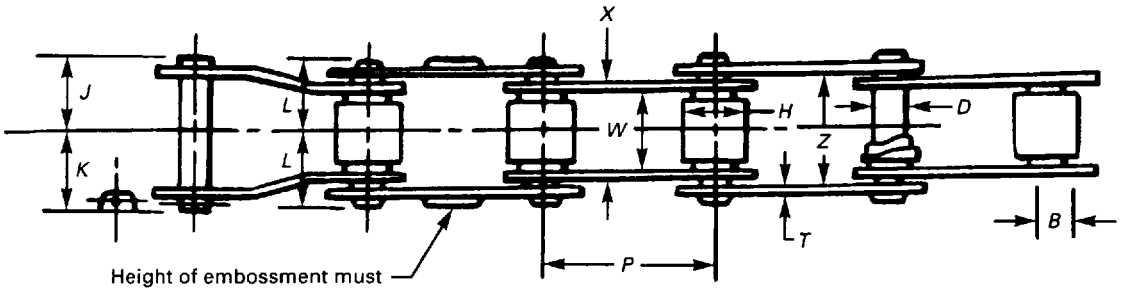

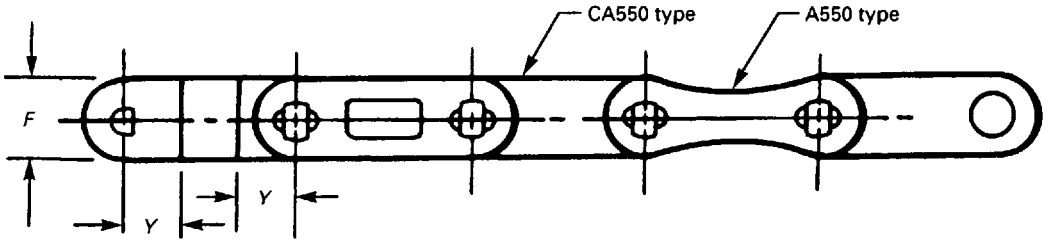

B = Bushing bore
D = Pin diameter
F = Sidebar height
H = Roller diameter
J = ℄ to cotter pin head
K = ℄ to cottered pin end
L = ℄ to riveted head
P = Pitch
T = Sidebar thickness
W = Width between sidebars, roller link
X = Overall roller link width
Y = Hole ℄ to bend
Z = Width between sidebars, pin link

TABLE 1 GENERAL CHAIN DIMENSIONS

	Dimensions, in.															
Chain No.	*B*, Min.	*D*, Max.	*F*, Max.	*H*, Max.	*J*, Max.	*K*, Max.	*L*, Max.	*P*, Nominal	*T*, Max.	*W*, Min.	*X*, Max.	*Y*, Min.	*Z*, Min.	Measuring Load, lb	M.U.T.S., lb [Note (1)]	Chain Length Tolerance
A550/CA550	0.286	0.283	0.794	0.664	0.750	0.812	0.700	1.630	1.113	0.750	1.020	0.500	1.025	100	8500	+0.3% –0
A555/CA555	0.286	0.283	0.794	0.664	0.598	0.720	0.598	1.630	0.125	0.490	0.755	0.500	0.800	100	8500	+0.3% –0
A557/CA557	0.326	0.316	0.920	0.710	0.750	0.865	0.740	1.630	0.125	0.758	1.032	0.500	1.090	145	12500	+0.3% –0
A620/CA620	0.286	0.283	0.794	0.705	0.890	0.951	0.820	1.654	0.132	0.965	1.244	0.500	1.249	100	8500	+0.3% –0

	Dimensions, mm															
Chain No.	*B*, Min.	*D*, Max.	*F*, Max.	*H*, Max.	*J*, Max.	*K*, Max.	*L*, Max.	*P*, Nominal	*T*, Max.	*W*, Min.	*X*, Max.	*Y*, Min.	*Z*, Min.	Measuring Load, kN	M.U.T.S., kN [Note (1)]	Chain Length Tolerance
A550/CA550	7.26	7.19	20.17	16.86	19.05	20.62	17.78	41.40	2.87	19.05	25.91	12.70	26.04	0.44	37.8	+0.3% –0
A555/CA555	7.26	7.19	20.17	16.86	15.19	18.29	15.19	41.40	3.18	12.45	19.18	12.70	20.32	0.44	37.8	+0.3% –0
A557/CA557	8.28	8.03	23.37	18.03	19.05	21.97	18.80	41.40	3.18	19.25	26.21	12.70	27.67	0.64	55.6	+0.3% –0
A620/CA620	7.26	7.19	20.17	17.91	22.61	24.15	21.08	42.01	3.35	24.51	31.60	12.70	31.72	0.44	37.8	+0.3% –0

NOTE:
(1) See para. 2.1.

Not for Resale

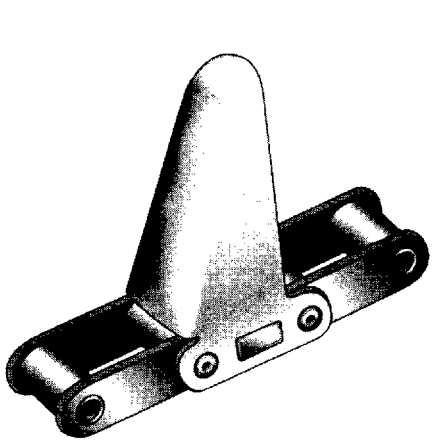

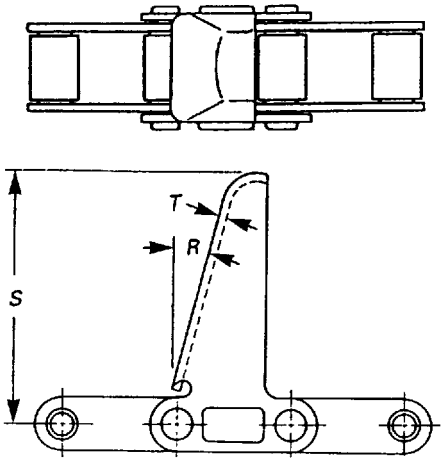

TABLE 2 C11E, C13E, AND C6E ATTACHMENTS

			Dimensions, in.		Dimensions, mm	
Attachment No.	Chain No.	*R*, deg	*S*	*T*	*S*	*T*
C11E	CA550	15/17	2.500	0.105	63.5	2.7
C13E	CA550	15	3.625	0.105	92.1	2.7
C6E	CA555	15	2.500	0.120	63.5	3.0

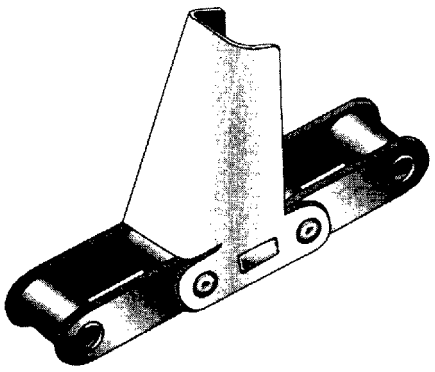

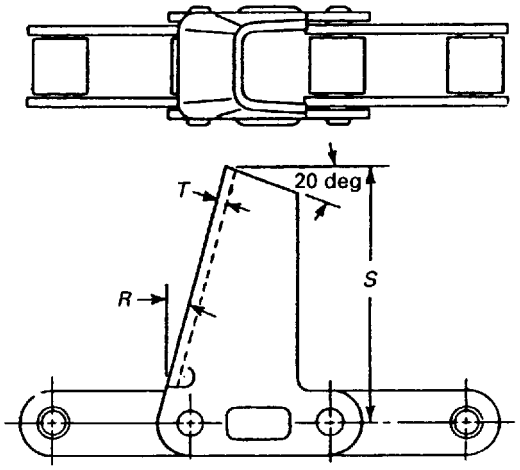

TABLE 3 C17E ATTACHMENT

			Dimensions, in.		Dimensions, mm	
Attachment No.	Chain No.	*R*, deg	*S*	*T*	*S*	*T*
C17E	CA550	15/20	3.000	0.105	76.2	2.7

Copyright ASME International
Provided by IHS under license with ASME
No reproduction or networking permitted without license from IHS

Not for Resale

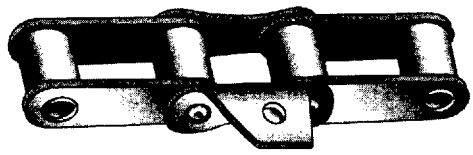

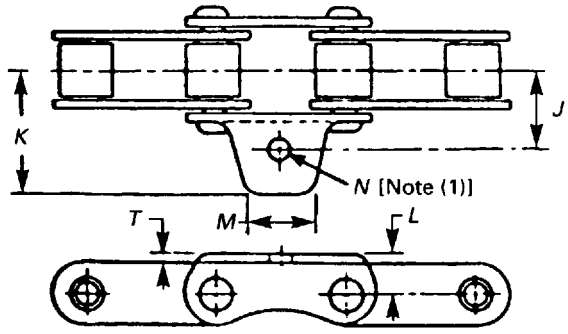

TABLE 4 A19 ATTACHMENT

Attachment No.	Chain No.	Dimensions, in. J	K, Max.	L	M	N [Note (1)]	T	Dimensions, mm J	K, Max.	L	M	N [Note (1)]	T
A19	A550	1.000	1.500	0.500	0.875	0.266	0.105	25.4	38.1	12.7	22.2	6.7	2.7

NOTE:
(1) Hole is sized for use with rivets.

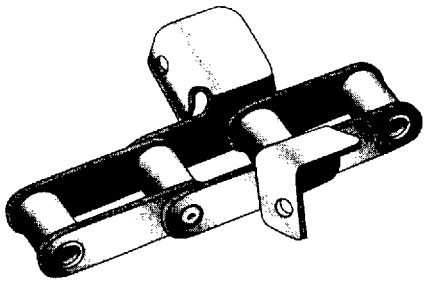

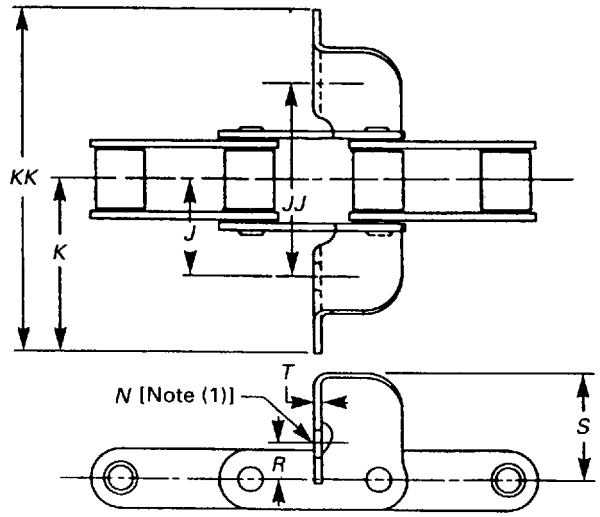

TABLE 5 F14 ATTACHMENT

Attachment No.	Chain No.	Dimensions, in. J	JJ	K, Max.	KK, Max.	N [Note (1)]	R	S, Max.	T
F14	CA550	1.562	3.125	2.062	4.125	0.328	0.625	1.250	0.105

Attachment No.	Chain No.	Dimensions, in. J	JJ	K, Max.	KK, Max.	N [Note (1)]	R	S, Max.	T
F14	CA550	39.7	79.4	52.4	104.8	8.3	15.9	31.8	2.7

NOTE:
(1) Hole is sized for use with rivets.

Copyright ASME International
Provided by IHS under license with ASME
No reproduction or networking permitted without license from IHS
Not for Resale

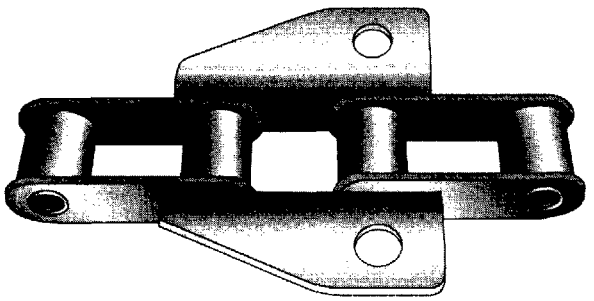

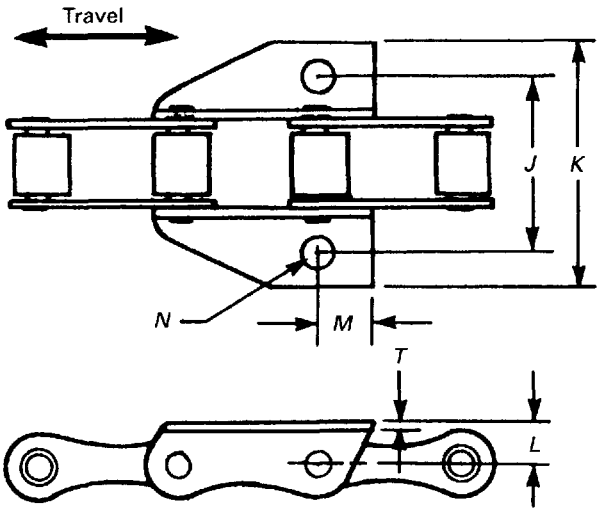

TABLE 6 K39M ATTACHMENT

Attachment No.	Chain No.	Dimensions, in. J	K	L, Max.	M	N, Max.	T	Dimensions, mm J	K	L, Max.	M	N, Max.	T
K39M	A557	2.000	2.98	0.560	0.635	0.406	0.120	50.8	75.70	14.22	16.13	10.31	3.05

GENERAL NOTE: Holes in attachments are dimensioned for use with rivets.

Copyright ASME International
Provided by IHS under license with ASME
No reproduction or networking permitted without license from IHS

Not for Resale

ASME B29.25

1 Definition 27

2 References 27

3 General Chain Proportions and Designations 27

4 Attachments 28

5 Sprockets 28

Figure

1 Open Barrel Steel Pintle-Type Conveyor Chain 28

Tables

1 Minimum and Maximum Controlling Dimensions for Interchangeable Chain Links 29

2 AS Attachment 30

3 C1 Attachment 30

Copyright ASME International
Provided by IHS under license with ASME
No reproduction or networking permitted without license from IHS
Not for Resale

OPEN BARREL STEEL PINTLE-TYPE CONVEYOR CHAINS, ATTACHMENTS, AND SPROCKETS

1 DEFINITION

open barrel steel pintle chains: a series of one-piece formed links, connected by pins, that articulate within the barrels of adjacent links. Each link has a barrel end and an open end. The pins are fixed against rotation by mechanical locks or interference fits at the open end of the link. The barrels are open, leaving the pins exposed on one side. Sprocket contact is made against the barrel or against the exposed pin (see Fig. 1 and Table Illustration 1 of B29.25).

2 REFERENCES

The following is a list of publications referenced in this Standard.

ASME B29.4M-1994, Double-Pitch Conveyor Roller Chains, Attachments, and Sprockets

ASME B29.11M-1994, Combination Chains, Attachments, and Sprocket Teeth

ASME B29.14M-1996, "H" Type Mill Chains, Attachments, and Sprocket Teeth

ASME B29.16M-1995, Welded Steel Type Mill Chains, Attachments, and Sprocket Teeth

Publisher: The American Society of Mechanical Engineers (ASME), Three Park Avenue, New York, NY 10016-5990; Order Department: 22 Law Drive, Box 2300, Fairfield, NJ 07007-2300

Chains for Power Transmission and Material Handling

Publisher: American Chain Association (ACA), 6724 Lone Oak Boulevard, Naples, FL 34109

3 GENERAL CHAIN PROPORTIONS AND DESIGNATIONS

3.1 Minimum Ultimate Tensile Strength

The Minimum Ultimate Tensile Strength (M.U.T.S.), for chain covered by this Standard, is the minimum force at which an unused, undamaged chain could fail when subjected to a single tensile loading test.

WARNING: The Minimum Ultimate Tensile Strength is NOT a "working load." The M.U.T.S. greatly exceeds the maximum force that may be safely applied to the chain.

(a) Test Procedure. A tensile force is slowly applied, in uniaxial direction at a rate not to exceed 2.0 in. per min., to the ends of the chain sample.

(b) The tensile test is a destructive test. Even though the chain may not visibly fail when subjected to the M.U.T.S., it will have been damaged and will be unfit for service.

CAUTION: This load is beyond the yield strength of the chain and would render the chain unsuitable for application.

(c) For application guidance, consult the manufacturers' catalogs or the American Chain Association's handbook, *Chains for Power Transmission and Material Handling.*

3.2 Measuring Load

This is the load under which a dry or lightly lubricated chain should be measured for length. Length measurements are to be taken over a length of at least 24 in. (600 mm).

3.3 Strand Length Tolerance

New chains under measuring load may be over theoretical length up to 0.5 in. in 120 in. (12.7 mm in 3048 mm), but may not be under theoretical length.

3.4 Dimensions of Chain Links

To assure interchangeability of links as produced by different makers of chain, standard maximum and minimum dimensions are listed. They are not actual dimensions used in manufacturing, but rather the limiting dimensions, maximum or minimum, required to assure the desired interchangeability. All dimensions are given in a decimal inch system. The metric equivalent dimensions are for reference only.

Previous page is blank

Copyright ASME International
Provided by IHS under license with ASME
No reproduction or networking permitted without license from IHS
Not for Resale

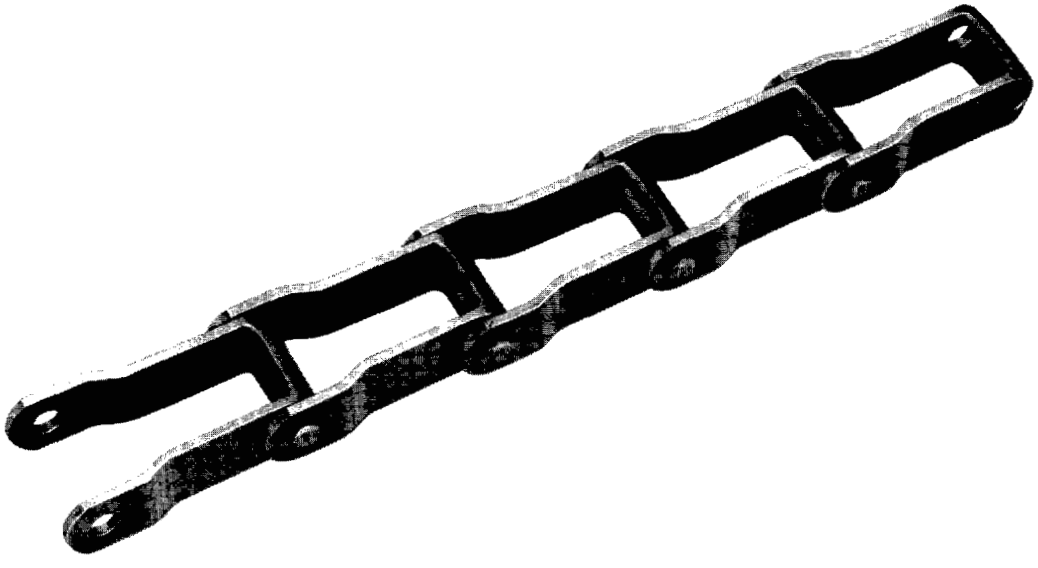

FIG. 1 OPEN BARREL STEEL PINTLE-TYPE CONVEYOR CHAIN

4 ATTACHMENTS

4.1 Tolerance for Chain With Attachments

The tolerances for length are identical for chains without attachments (see Table 1 of B29.25).

4.2 Dimensions of Attachments

See Tables 2 and 3 of B29.25.

5 SPROCKETS

5.1 General Information

The following information gives controlling dimensions for sprockets used with open barrel steel pintle chains. It should be noted that 88K may also run on sprockets designed from ASME B29.11M combination, ASME B29.14M H-mill, or ASME B29.16M welded steel-type chains of identical pitch. Also, 205 will run on the same sprockets as the C2050 doublepitch conveyor chain listed in ASME B29.4M.

If the sprocket is to be used in areas where debris is likely to engage it, root diameters should be decreased and pitch line clearances increased acordingly. Consult chain manufacturers for more details.

The use of a flanged sprocket is optional.

5.2 Sprocket Tooth Form

See Fig. 3 of B29.6.[1]

[1] The B29.6 Standard is contained within this edition of the B29.300 Standard.

Copyright ASME International
Provided by IHS under license with ASME
No reproduction or networking permitted without license from IHS

Not for Resale

Copyright ASME International
Provided by IHS under license with ASME
No reproduction or networking permitted without license from IHS

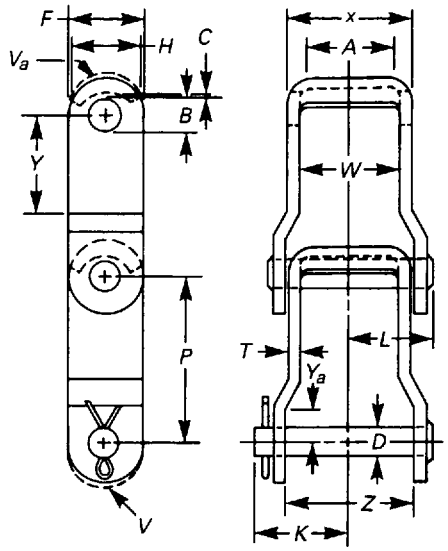

A = width of barrel for sprocket contact
B = inside diameter of barrel hole
C = clearance between barrel hole and barrel
D = pin diameter
F = overall chain height
H = barrel backing height
K = pin end to center line
L = riveted end to center line
P = assembled chain pitch; this is a theoretical reference dimension.
T = sidebar thickness
V = sidebar end clearance radius, open end of link
V_a = sidebar clearance radius (barrel), closed end
W = inside width of chain, min.
X = outside width of chain, barrel end
Y = sidebar end clearance zone, barrel end of link
Y_a = sidebar end clearance zone, open end of link
Z = open end dimension for intercouplability

TABLE 1 MINIMUM AND MAXIMUM CONTROLLING DIMENSIONS FOR INTERCHANGEABLE CHAIN LINKS

Chain No.	Dimensions, in.																Measuring Load, lb	M.U.T.S., lb	No. of Pitches in Standard Measuring Length	Strand Length, in.	
	A, Min.	*B*, Min.	*C*, Max.	*D*, Max.	*F*, Max.	*H*, Max.	*K*, Max.	*L*, Max.	*P*, Nominal	*V*, Max.	V_a, Max.	*W*, Min.	*X*, Max.	*Y*, Min.	Y_a, Min.	*Z*, Min.				Min.	Max.
205	0.30	0.207	0.010	0.202	0.48	0.41	0.50	0.44	1.250	0.26	0.26	0.37	0.56	0.30	0.28	0.57	100	2800	96	120.00	120.50
662	0.70	0.293	0.018	0.283	0.74	0.71	0.88	0.82	1.664	0.41	0.39	0.90	1.19	0.45	0.41	1.20	100	8500	72	119.81	120.31
667H	0.80	0.323	0.022	0.313	0.89	0.82	1.05	0.91	2.313	0.49	0.48	1.00	1.28	0.53	0.49	1.29	100	9500	52	120.28	120.78
665X	0.80	0.447	0.026	0.437	0.96	0.88	1.17	1.04	2.250	0.53	0.50	1.00	1.42	0.57	0.52	1.43	100	15000	53	119.25	119.75
665K	0.80	0.447	0.028	0.437	1.08	0.95	1.26	1.12	2.250	0.60	0.56	1.00	1.51	0.64	0.58	1.52	100	20000	53	119.25	119.75
88K	0.80	0.447	0.028	0.437	1.08	0.95	1.26	1.12	2.609	0.60	0.56	1.00	1.51	0.64	0.58	1.52	100	20000	46	120.01	120.51

Chain No.	Dimensions, mm																Measuring Load, kN	M.U.T.S., kN	No. of Pitches in Standard Measuring Length	Strand Length, mm	
	A, Min.	*B*, Min.	*C*, Max.	*D*, Max.	*F*, Max.	*H*, Max.	*K*, Max.	*L*, Max.	*P*, Nominal	*V*, Max.	V_a, Max.	*W*, Min.	*X*, Max.	*Y*, Min.	Y_a, Min.	*Z*, Min.				Min.	Max.
205	7.6	5.28	0.25	5.13	12.2	10.4	12.7	11.1	31.75	6.6	6.6	9.7	14.2	7.6	7.1	14.5	0.45	12.5	96	3048.0	3060.7
662	17.8	7.44	0.46	7.19	18.8	18.0	22.4	20.8	42.47	10.4	9.9	22.9	30.2	11.4	10.4	30.5	0.45	37.8	72	3043.2	3055.9
667H	20.3	8.20	0.56	7.95	22.6	20.8	26.6	23.1	58.75	12.4	12.2	25.4	32.5	13.5	12.4	32.8	0.45	42.3	52	3055.1	3067.8
665X	20.3	11.35	0.66	11.10	24.4	22.3	29.6	26.4	57.15	13.5	12.7	25.4	36.1	14.5	13.2	36.4	0.45	66.7	53	3029.0	3041.7
665K	20.3	11.35	0.71	11.10	27.4	24.1	31.9	28.3	57.15	15.2	14.2	25.4	38.4	16.3	14.7	38.7	0.45	89.0	53	3029.0	3041.7
88K	20.3	11.35	0.71	11.10	27.4	24.1	31.9	28.3	66.27	15.2	14.2	25.4	38.4	16.3	14.7	38.7	0.45	89.0	46	3048.3	3070.0

Not for Resale

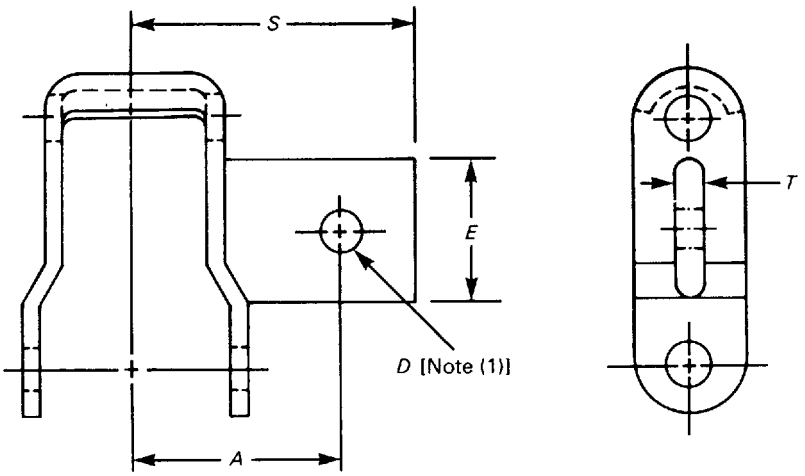

TABLE 2 AS ATTACHMENT

	Dimensions, in.					Dimensions, mm				
Chain No.	*A*	*D*, Min. [Note (1)]	*E*, Max.	*S*, Max.	*T*	*A*	*D*, Min. [Note (1)]	*E*, Max.	*S*, Max.	*T*
662	1.38	0.27	0.95	1.91	0.17	35.9	6.75	24.2	48.4	4.3
667H	2.03	0.33	1.17	2.62	0.25	51.6	8.33	29.7	66.6	6.4
665X	2.03	0.33	1.17	2.72	0.31	51.6	8.33	29.7	69.0	7.9
665K	2.03	0.39	1.28	2.84	0.38	51.6	9.92	32.5	72.2	9.5
88K	2.03	0.39	1.28	2.84	0.38	51.6	9.92	32.5	72.2	9.5

NOTE:
(1) Hole is sized for use with rivets.

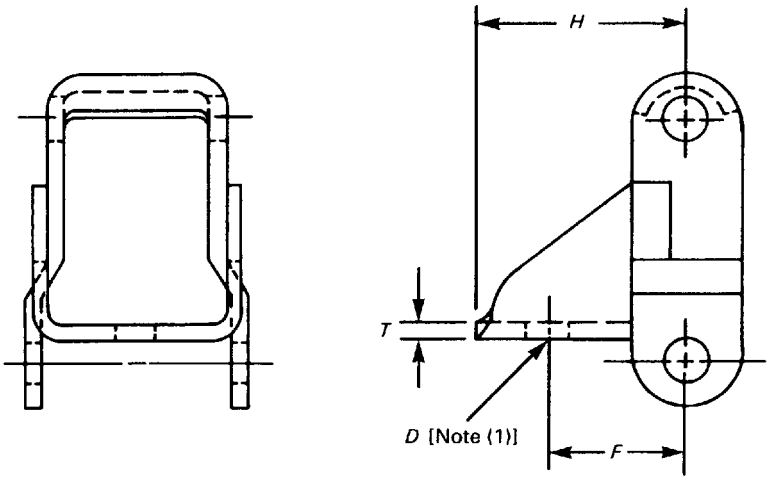

TABLE 3 C1 ATTACHMENT

	Dimensions, in.				Dimensions, mm			
Chain No.	*D*, Min. [Note (1)]	*F*	*H*, Max.	*T*	*D*, Min. [Note (1)]	*F*	*H*, Max.	*T*
662	0.27	0.90	1.46	0.11	6.75	22.9	37.2	2.7
667H	0.27	1.00	1.53	0.19	6.75	25.4	38.9	4.7
665X	0.27	1.16	1.56	0.19	6.75	29.5	39.7	4.7

NOTE:
(1) Hole is sized for use with rivets.

Copyright ASME International
Provided by IHS under license with ASME
No reproduction or networking permitted without license from IHS
Not for Resale

AMERICAN NATIONAL STANDARDS — CHAINS, ATTACHMENTS, AND SPROCKETS FOR POWER TRANSMISSION AND CONVEYING

Precision Power Transmission Roller Chains, Attachments, and Sprockets B29.1M-1993
Inverted Tooth (Silent) Chains and Sprockets ..... B29.2M-1982(R1994)
Double-Pitch Power Transmission Roller Chains and Sprockets B29.3M-1994
Double-Pitch Conveyor Roller Chains, Attachments, and Sprockets B29.4M-1994
Leaf Chains, Clevises, and Sheaves B29.8M-1993
Heavy Duty Offset Sidebar Power Transmission Roller Chains and Sprocket Teeth B29.10M-1997
Combination Chains, Attachments, and Sprocket Teeth B29.11M-1994
Steel Bushed Rollerless Chains, Attachments, and Sprocket Teeth B29.12M-1997
"H" Type Mill Chains, Attachments, and Sprocket Teeth B29.14M-1996
Steel Roller Type Conveyor Chains, Attachments, and Sprocket Teeth B29.15M-1997
Welded Steel Type Mill Chains, Attachments, and Sprocket Teeth B29.16M-1995
Hinge Type Flat Top Conveyor Chains and Sprocket Teeth B29.17M-1998
Welded Steel-Type Drag Chains, Attachments, and Sprocket Teeth B29.18M-1994
700 Class Welded Steel and Cast Chains, Attachments, and Sprockets for Water and Sewage Treatment Plants B29.21M-1996
Drop Forged Rivetless Chains, Sprocket Teeth Drive Chain/Drive Dogs B29.22M-1995
Flexible Chain Couplings ..... B29.23M-1985(R1995)
Roller Load Chains for Overhead Hoists B29.24M-1995
Fatigue Testing Power Transmission Roller Chain B29.26M-1996
Agricultural, Detachable, and Pintle Chains, Attachments, and Sprockets B29.300-1998

The ASME Publications Catalog shows a complete list of all the Standards published by the Society. For a complimentary catalog, or the latest information about our publications, call 1-800-THE-ASME (1-800-843-2763).

Copyright ASME International
Provided by IHS under license with ASME
No reproduction or networking permitted without license from IHS

Not for Resale

ASME Services

ASME is committed to developing and delivering technical information. At ASME's Information Central, we make every effort to answer your questions and expedite your orders. Our representatives are ready to assist you in the following areas:

ASME Press
Codes & Standards
Credit Card Orders
IMechE Publications
Meetings & Conferences
Member Dues Status
Member Services & Benefits
Other ASME Programs
Payment Inquiries
Professional Development
Short Courses
Publications
Public Information
Self-Study Courses
Shipping Information
Subscriptions/Journals/Magazines
Symposia Volumes
Technical Papers

How can you reach us? It's easier than ever!

There are four options for making inquiries* or placing orders. Simply mail, phone, fax, or E-mail us and an Information Central representative will handle your request.

Mail
ASME
22 Law Drive, Box 2900
Fairfield, New Jersey
07007-2900

Call Toll Free
US & Canada: 800-THE-ASME
(800-843-2763)
Mexico: 95-800-THE-ASME
(95-800-843-2763)
Universal: 973-882-1167

Fax-24 hours
973-882-1717
973-882-5155

E-Mail-24 hours
Infocentral
@asme.org

* Information Central staff are not permitted to answer inquiries about the technical content of this code or standard. Information as to whether or not technical inquiries are issued to this code or standard is shown on the copyright page. All technical inquiries must be submitted in writing to the staff secretary. Additional procedures for inquiries may be listed within.

Copyright ASME International
Provided by IHS under license with ASME
No reproduction or networking permitted without license from IHS
Not for Resale

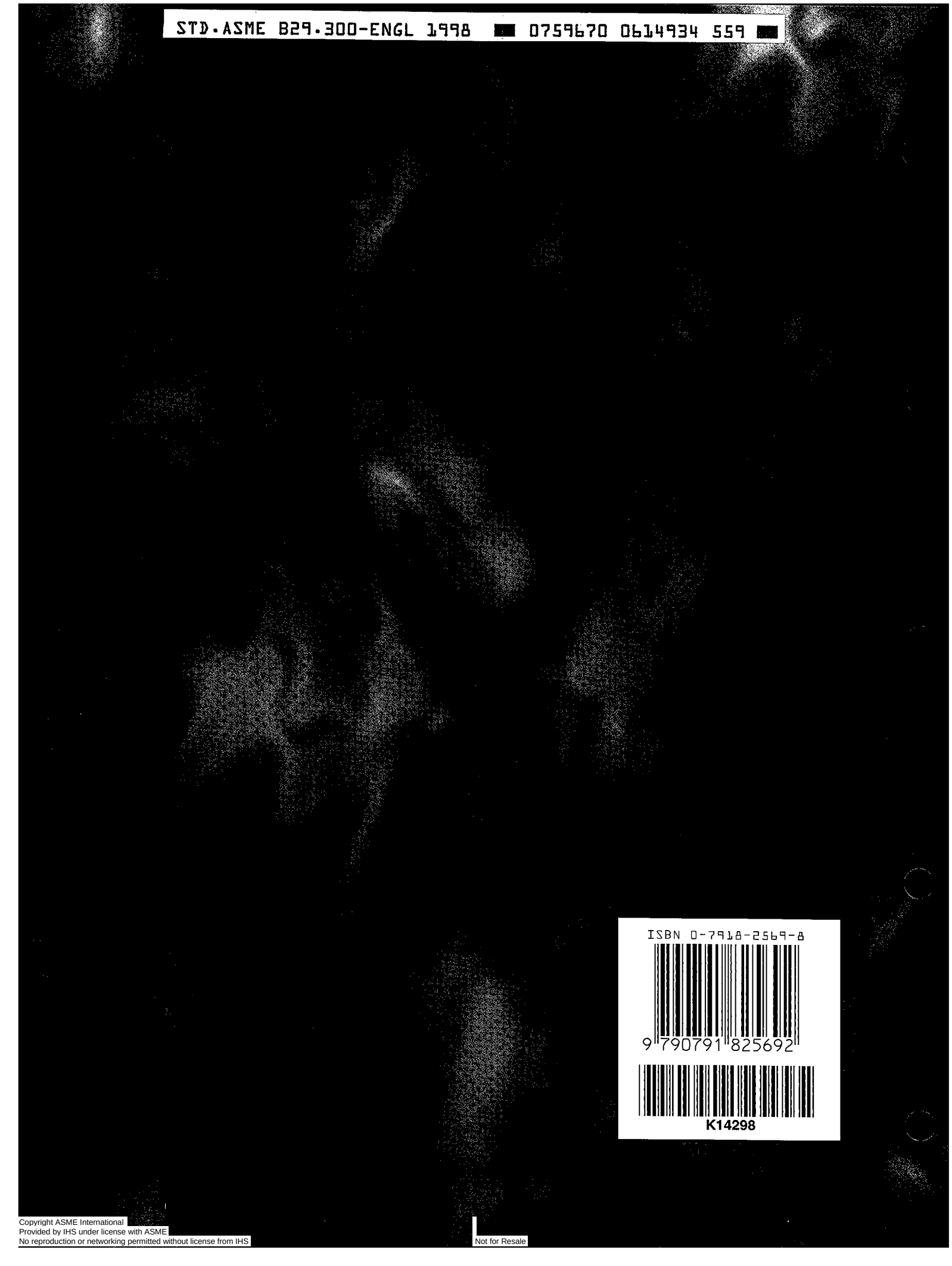

ISBN 0-7918-2569-8

9 790791 825692

K14298

Copyright ASME International
Provided by IHS under license with ASME
No reproduction or networking permitted without license from IHS

Not for Resale