ASME B29.22-2001
(Revision of ASME B29.22M-1995)

DROP FORGED RIVETLESS CHAINS, SPROCKET TEETH DRIVE CHAIN/DRIVE DOGS

AN AMERICAN NATIONAL STANDARD



The American Society of Mechanical Engineers

Copyright ASME International
Provided by IHS under license with ASME
No reproduction or networking permitted without license from IHS

Not for Resale

The American Society of Mechanical Engineers

AN AMERICAN NATIONAL STANDARD

DROP FORGED RIVETLESS CHAINS, SPROCKET TEETH DRIVE CHAIN/DRIVE DOGS

ASME B29.22-2001

(Revision of ASME B29.22M-1995)

Copyright ASME International
Provided by IHS under license with ASME
No reproduction or networking permitted without license from IHS

Not for Resale

Date of Issuance: July 1, 2002

This Standard will be revised when the Society approves the issuance of a new edition. There will be no addenda issued to this Edition.

ASME will issue written replies to inquiries concerning interpretations of technical aspects of this Standard.

ASME is the registered trademark of The American Society of Mechanical Engineers.

This code or standard was developed under procedures accredited as meeting the criteria for American National Standards. The Standards Committee that approved the code or standard was balanced to assure that individuals from competent and concerned interests have had an opportunity to participate. The proposed code or standard was made available for public review and comment which provides an opportunity for additional public input from industry, academia, regulatory agencies, and the public-at-large.

ASME does not "approve," "rate," or "endorse" any item, construction, proprietary device, or activity.

ASME does not take any position with respect to the validity of any patent rights asserted in connection with any items mentioned in this document, and does not undertake to insure anyone utilizing a standard against liability for infringement of any applicable letters patent, nor assume any such liability. Users of a code or standard are expressly advised that determination of the validity of any such rights, and the risk of infringement of such rights, is entirely their own responsibility.

Participation by federal agency representative(s) or person(s) affiliated with industry is not to be interpreted as government or industry endorsement of this code or standard.

ASME accepts responsibility for only those interpretations of this document issued in accordance with established the ASME procedures and policies, which precludes the issuance of interpretations by individuals.

No part of this document may be reproduced in any form,
in an electronic retrieval system or otherwise,
without the prior written permission of the publisher.

The American Society of Mechanical Engineers
Three Park Avenue, New York, NY 10016-5990

Copyright © 2002 by
THE AMERICAN SOCIETY OF MECHANICAL ENGINEERS
All Rights Reserved
Printed in U.S.A.

--`-`-`,,`,,`,`,,`---

Copyright ASME International
Provided by IHS under license with ASME
No reproduction or networking permitted without license from IHS
Not for Resale

CONTENTS

Foreword iv
Committee Roster v
Correspondence with B29 Committee vi

1 Introduction 1
2 Definitions 1
3 Minimum Ultimate Tensile Strength 2
4 Measuring Load 2
5 Strand Length Tolerance 2
6 Dimensions for Chain Links 2
7 Finish 2
8 Numbering System 2
9 Chain Assembly 2
10 Sprockets 2
11 Drive 3
12 Drive Dogs 3

Figures

1 Pin 1
2 Regular Drop Forged Rivetless Chain 1
3 X-Type Drop Forged Rivetless Chain 2
4 X-Type Chain 2
5 Chain Assembly 3
6 Sprocket Tooth Form A 9
7 Sprocket Tooth Form B 10
8 Drive 11
9 X 348 and 348 Dog 11
10 X 458 and 458 Dog 12
11 X 678 and 678 Dog 12
12 X 100-16 and 100-16 Dog 13
13 X 75-13 and 75-13 Dog 13
14 X 150-22 and 150-22 Dog 14

Tables

1 Maximum and Minimum Strand Tolerances 4
2 Regular Drop Forged Rivetless Chain 5
3 X-Type Drop Forged Rivetless Chain 6
4 Modified X-Type Drop Forged Rivetless Chain 7
5 Sprockets: Maximum Eccentricity and Face Runout at Root Diameter 7
6 Sprocket Factors 8
7 Sprocket Tooth Form 8

Copyright ASME International
Provided by IHS under license with ASME
No reproduction or networking permitted without license from IHS
Not for Resale

FOREWORD

A subcommittee was appointed by the ANSI B29 Committee in September of 1978 to establish an interchangeability standard for Drop Forged Rivetless Chains. The terminology of this chain series was established many years ago and has become generic for this referenced chain.

As in all other B29 chain standards, no attempt is made to establish absolute engineering characteristics or tolerances where interchangeability is not involved.

Other materials and methods have been used to manufacture the rivetless chain. However, this standard is promulgated for the Drop Forged type of heat-treated medium carbon steel chain in the sizes that comprise the vast majority of use. Cast or fabricated chains of alloys or stainless steel are not considered.

Particularly worthy of note is the actual and reference pitch of these chains. Rivetless chains, in general, are a slight degree longer than reference pitch. This allows the use of ANSI and ISO standard roller chains in combination with attached "dogs" to act as drives. According to the experienced estimate of the subcommittee members, roller chain/dog drives are used with more than half the drop forged rivetless chain systems in existence. Use of these drives permits systems of unlimited length.

When considering metrication for these chains, the example followed was previously established for ANSI and BSA (DIN) chains, that is: soft metric conversion. This standard considers that the close even integers of pitch to the reference pitch is the appropriate metric pitch conversion. All other metric conversions are made in accordance with accepted SI conversion principles. The 2001 revision includes an update of the M.U.T.S. definition in Section 3.

This Standard was approved by the American National Standards Institute on November 8, 2001.

Copyright ASME International
Provided by IHS under license with ASME
No reproduction or networking permitted without license from IHS
Not for Resale

ASME B29 COMMITTEE
Chains, Attachments, and Sprockets for Power Transmission and Conveying

(The following is the roster of the Committee at the time of approval of this Standard.)

OFFICERS

J. L. Wright, *Chair*
C. G. Springman, *Vice Chair*
M. Lo, *Secretary*

COMMITTEE PERSONNEL

W. C. Hall, Ramsey Production Corp.
L. E. Hampel, Allied-Locke Industries Inc.
A. M. McCarty, Emerson Power Transmission
D. Moore, Jeffrey Chain Co.
R. W. Neuhengen, Drives, Inc.
V. D. Petershack, Hitachi Maxco, Ltd.
V. E. Skipper, *Alternate,* Hitachi Maxco, Ltd.
R. A. Reinfried, Conveyor Equipment Manufacturers Association
S. Rhoad, Webster Industries Inc.
R. J. Rothchild, U.S. Tsubaki, Inc.
K. J. Smith, Kone, Inc.

Copyright ASME International
Provided by IHS under license with ASME
No reproduction or networking permitted without license from IHS
Not for Resale

CORRESPONDENCE WITH B29 COMMITTEE

General. ASME standards are developed and maintained with the intent to represent the consensus of concerned interests. As such, users of this Standard may interact with the Committee by requesting interpretations, proposing revisions, and attending Committee meetings. Correspondence should be addressed to:

Secretary, B29 Main Committee
The American Society of Mechanical Engineers
Three Park Avenue
New York, NY 10016-5990

Proposing Revisions. Revisions are made periodically to the Standard to incorporate changes that appear necessary or desirable, as demonstrated by the experience gained from the application of the Standard. Approved revisions will be published periodically.

The Committee welcomes proposals for revisions to this Standard. Such proposals should be as specific as possible, citing the paragraph number(s), the proposed wording, and a detailed description of the reasons for the proposal, including any pertinent documentation.

Interpretations. Upon request, the B29 Committee will render an interpretation of any requirement of the Standard. Interpretations can only be rendered in response to a written request sent to the Secretary of the B29 Main Committee.

The request for interpretation should be clear and unambiguous. It is further recommended that the inquirer submit his/her request in the following format:

Subject:	Cite the applicable paragraph number(s) and the topic of the inquiry.
Edition:	Cite the applicable edition of the Standard for which the interpretation is being requested.
Question:	Phrase the question as a request for an interpretation of a specific requirement suitable for general understanding and use, not as a request for an approval of a proprietary design or situation. The inquirer may also include any plans or drawings, which are necessary to explain the question; however, they should not contain proprietary names or information.

Requests that are not in this format will be rewritten in this format by the Committee prior to being answered, which may inadvertently change the intent of the original request.

ASME procedures provide for reconsideration of any interpretation when or if additional information that might affect an interpretation is available. Further, persons aggrieved by an interpretation may appeal to the cognizant ASME Committee or Subcommittee. ASME does not "approve," "certify," "rate," or "endorse" any item, construction, proprietary device, or activity.

Attending Committee Meetings. The B29 Main Committee regularly holds meetings, which are open to the public. Persons wishing to attend any meeting should contact the Secretary of the B29 Main Committee.

Copyright ASME International
Provided by IHS under license with ASME
No reproduction or networking permitted without license from IHS
Not for Resale

DROP FORGED RIVETLESS CHAINS, SPROCKET TEETH DRIVE CHAIN/ DRIVE DOGS

1 INTRODUCTION

The drop forged rivetless chain has widespread use in many industries on trolleys, scraper flights, assembly, and similar conveyors. Because materials do not tend to pack in its open structure, the drop forged rivetless chain is used extensively for flight conveyors. Its design permits both horizontal and vertical operation over irregular routes, making it particularly acceptable for trolley conveyor service.

2 DEFINITIONS

drop forged rivetless chain: chain made from drop forged steel parts that are heat treated and are proportioned for high strength and comparative light weight. Its simple design permits assembly or dismantling by hand and this chain is available in three general types as illustrated and described (see *regular drop forged rivetless chain*, *X-type chain*, and *modified X-type rivetless chain*). Numerous attachments are available to suit a wide variety of applications including trolley conveyor service.

pin: part forged symmetrically with T-heads on both ends that lock into the sidebars (see Fig. 1).

regular drop forged rivetless chain: chain used for general applications where minimal side flexing is required (see Fig. 2). Attachments are available for mounting on center links or on extended pins.

sidebar: part made with a center panel that acts as a shield to reduce material falling through the link and provides strength. The center panel is provided with a center drainage hole (see Fig. 3).

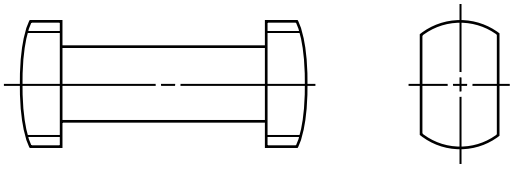

FIG. 1 PIN

X-type chain: chain with greater side-flexing capabilities compared to regular chain (see Figs. 3 and 4).

modified X-type rivetless chain: chain with the same feature as X-type (see Fig. 4); additionally, modified X-type has a controlled area, *C*, on the center link that helps prevent movement of attachments, which may be mounted to the center link (see Fig. 5, dimension *C*.)

3 MINIMUM ULTIMATE TENSILE STRENGTH

Minimum Ultimate Tensile Strength (M.U.T.S.) for chains covered by this Standard, is the minimum force at which an unused, undamaged chain could fail when subjected to a single tensile loading test.

(a) WARNING: The minimum ultimate tensile strength is NOT a "working load." The M.U.T.S. greatly exceeds the maximum force that may be applied to the chain.

(b) Test procedure. A tensile force is slowly applied, in uniaxial direction, to the ends of the chain sample.

(c) The tensile test is a destructive test. Even though the chain may not visibly fail when subjected to the *minimum ultimate tensile force,* it will have been damaged and will be unfit for service.

The values adopted for this Standard are for heat-treated medium carbon steel chain only. Medium carbon steels not in the heat-treated condition are not covered by this Standard.

Chains produced of other materials not covered in this Standard (alloys, stainless steel) or by casting or fabricating will also have significantly different values of M.U.T.S.

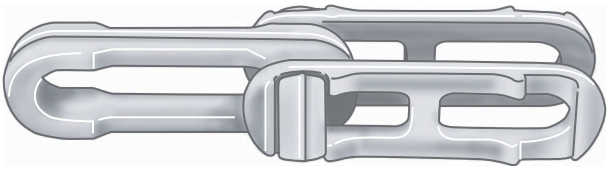

FIG. 2 REGULAR DROP FORGED RIVETLESS CHAIN

Copyright ASME International
Provided by IHS under license with ASME
No reproduction or networking permitted without license from IHS
Not for Resale

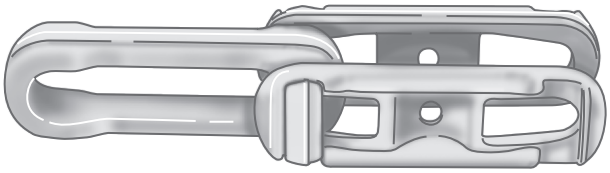

FIG. 3 X-TYPE DROP FORGED RIVETLESS CHAIN

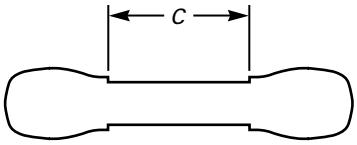

FIG. 4 X-TYPE CHAIN

4 MEASURING LOAD

The measuring load is determined as five times the weight of a 10 ft strand rounded to the nearest 100 lb. This value is then converted to kilonewtons for the metric equivalent.

5 STRAND LENGTH TOLERANCE

The length of new chains subjected to the specified measuring load must fall within the plus and minus tolerances shown in Table 1. Specific maximum and minimum strand lengths are shown in Tables 2, 3, and 4 for each chain.

Maximum and minimum strand tolerances for the given number of pitches in a measuring strand are shown in Table 1.

6 DIMENSIONS FOR CHAIN LINKS

To assure interchangeability of links as produced by different makers of chains, standard maximum and minimum dimensions are adopted. They are not actual dimensions used in manufacturing, but limiting dimensions, maximum or minimum, required to assure the desired interchangeability.

The metric equivalent dimensions are for reference only.

7 FINISH

Sharp edges and protrusions shall be absent from the pin seating and driving face areas of the center link.

8 NUMBERING SYSTEM

The numbering system for the rivetless chain gives significance to the chain number as shown.

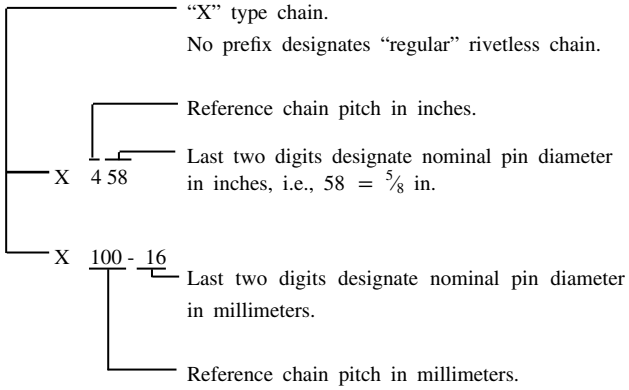

NOTE: Modified X-type chain is identified as X-type without additional notation on the chain.

9 CHAIN ASSEMBLY

See Fig. 5 and Tables 2, 3, and 4.

10 SPROCKETS

Two sprocket tooth forms are included: Forms A and B. The major difference between these two forms is in the method of generating the tooth form. Form A produces a curved tooth face and Form B a straight tooth face. Either form may be used. See Tables 5, 6, and 7, and Figs. 6 and 7.

10.1 Sprocket Tooth Form Data

Root diameter (D_r), pocket radius (R_p), and outside diameter (D_o) must not exceed the values obtained by the formulae. Oversize dimensions may cause improper chain and sprocket interaction and excessive chain loads (see Fig. 6).

In some cases the outside diameter (D_o) may be limited by special attachments mounted on the chain. For this reason, the outside diameter (D_o) should be checked to assure that interference does not exist. D_o obtained by the formula should be rounded off to the next smallest $\frac{1}{8}$ in. (3 mm).

Chain clearance circle (C_c) established by the formula is the maximum and will provide clearance under most conditions. However, the value obtained by the formula should be checked to assure that a given hub diameter does not interfere with chain attachments.

Copyright ASME International
Provided by IHS under license with ASME
No reproduction or networking permitted without license from IHS

Not for Resale

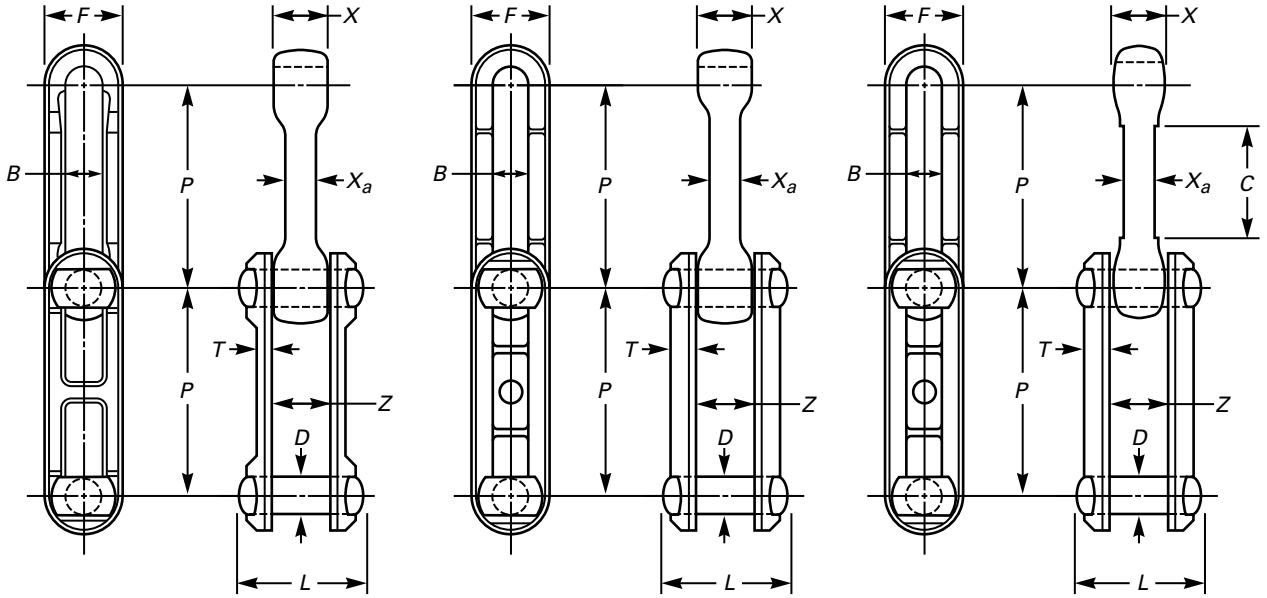

(a) Regular Rivetless Chain **(b) X-Type Rivetless Chain** **(c) Modified X-Type Rivetless Chain**

B = width of center link opening
C = center link mounting dimension
D = pin diameter
F = chain height
L = chain width over pins
P = chain pitch
T = sidebar thickness
X = center link width —primary
X_a = center link width —secondary
Z = width between sidebars

FIG. 5 CHAIN ASSEMBLY

Pocket radius (R_p) is the maximum and must not be made greater than the value obtained by this formula. For this reason, the calculated value is reduced to the next smaller $\frac{1}{2}$ in. (13 mm).

11 DRIVE

11.1 Typical Drive

The drive shown in Fig. 8 is widely used and can be located on any straight run of track. The driving chain is an endless ASME B29.1M steel roller chain fitted with cast, forged, or fabricated steel driving dogs that mesh with the rivetless conveyor chain to drive the conveyor. The drive and conveyor chains are held in proper engagement through the drive by a back-up bar and a series of guide rollers.

Drive dogs that follow in Figs. 9 – 14 are for chains having reference pitch of 3, 4, and 6 in. (75 mm, 100 mm, and 150 mm) only. Drive dogs for chains with reference pitch of 2 and 9 in. (50 mm and 230 mm) have not been included, since standards for these sizes have not been established.

12 DRIVE DOGS

12.1 ANSI 160 Drive Chain

See Figs. 9, 10, and 11.

12.2 ISO 32A1 Drive Chain

See Figs. 12, 13, and 14.

Copyright ASME International
Provided by IHS under license with ASME
No reproduction or networking permitted without license from IHS Not for Resale

TABLE 1 MAXIMUM AND MINIMUM STRAND TOLERANCES

Reference Pitch		Tolerance on Measuring Strand				Total Range	
		in.		mm			
in.	mm	plus	minus	plus	minus	in.	mm
2	50	1.25	0.50	31.8	12.7	1.75	44.5
3	75	1.25	0.50	31.8	12.7	1.75	44.5
4	100	0.75	0.50	19.1	12.7	1.25	31.8
6	150	0.75	0.25	19.1	6.4	1.00	25.4
9	230	0.75	0.25	19.1	6.4	1.00	25.4

Copyright ASME International
Provided by IHS under license with ASME
No reproduction or networking permitted without license from IHS
Not for Resale

Copyright ASME International
Provided by IHS under license with ASME
No reproduction or networking permitted without license from IHS

TABLE 2 REGULAR DROPPED FORGED RIVETLESS CHAIN
General Chain Dimensions, Minimum Ultimate Strength Rating, Strand Length, and Measuring Load for Checking Chain Lengths

	Dimensions in., (mm)													
	458 (100-16)		468 (100-19)		658 (150-16)		678 (150-22)		698 (150-28)		998 (230-28)		9118 (230-35)	
Chain No.	in.	(mm)	in.	(mm)	in.	(mm)	in.	(mm)	in.	(mm)	in.	(mm)	in.	(mm)
Reference pitch	4	(100)	4	(100)	6	(150)	6	(150)	6	(150)	9	(230)	9	(230)
P	4.031	(102.4)	4.031	(102.4)	6.031	(153.2)	6.031	(153.2)	6.031	(153.2)	9.031	(229.4)	9.031	(229.4)
B –Min.	0.66	(16.8)	0.84	(21.3)	0.66	(16.8)	0.95	(24.1)	1.18	(30.0)	1.18	(30.0)	1.47	(37.3)
D	0.63	(16.0)	0.75	(19.1)	0.63	(16.0)	0.87	(22.1)	1.12	(28.4)	1.12	(28.4)	1.36	(34.5)
F –Max.	1.44	(36.6)	1.93	(49.0)	1.44	(36.6)	2.03	(51.6)	2.69	(68.3)	2.69	(68.3)	3.03	(77.0)
L –Max.	2.31	(58.7)	3.31	(84.1)	2.31	(58.7)	3.03	(77.0)	3.75	(95.3)	3.75	(95.3)	4.88	(124.0)
T	0.31	(7.9)	0.43	(10.9)	0.47	(11.9)	0.47	(11.9)	0.58	(14.7)	0.63	(16.0)	0.75	(19.1)
X	1.00	(25.4)	1.61	(40.9)	1.00	(25.4)	1.28	(32.5)	1.54	(39.1)	1.54	(39.1)	1.95	(49.5)
X_a	0.64	(16.3)	1.14	(29.0)	0.64	(16.3)	0.83	(21.1)	1.00	(25.4)	1.00	(25.4)	1.31	(33.3)
Z	1.08	(27.4)	1.70	(43.2)	1.08	(27.4)	1.41	(35.8)	1.64	(41.7)	1.64	(41.7)	2.05	(52.1)
Minimum ultimate tensile strength, lb (kN)	42,000	(187)	68,000	(302)	42,000	(187)	72,000	(320)	136,000	(605)	136,000	(605)	187,000	(832)
No. of chain pitches in standard measuring length	30	(30)	30	(30)	20	(20)	20	(20)	20	(20)	14	(14)	14	(14)
Standard Measuring Length														
Max.	121.68	(3090.7)	121.68	(3090.7)	121.37	(3082.8)	121.37	(3082.8)	121.37	(3082.8)	127.18	(3230.4)	127.18	(3230.4)
Max.	120.43	(3058.9)	120.43	(3058.9)	129.37	(3057.4)	120.37	(3057.4)	120.37	(3057.4)	126.18	(3205.0)	126.18	(3205.0)
Measuring load, lb (kN)	200	(0.9)	400	(1.8)	100	(-0.4)	300	(1.3)	600	(2.7)	500	(2.2)	800	(3.6)

CAUTION: The numerical values in this table must be read in conjunction with the definition and explanatory note appearing in Section 6, "Dimensions for Chain Links." The M.U.T.S. values do not provide a sufficient or appropriate basis for determining chain application.

Not for Resale

TABLE 3 X-TYPE DROP FORGED RIVETLESS CHAIN
General Chain Dimensions, Minimum Ultimate Strength Rating, Strand Length, and Measuring Load for Checking Chain Lengths

	Dimensions, in. (mm)							
	X228 (X50-6)		X348 (X75-13)		X458 (X100-16)		X678 (X150-22)	
Chain No.	in.	(mm)	in.	(mm)	in.	(mm)	in.	(mm)
Reference pitch	2	(50)	3	(75)	4	(100)	6	(150)
P	2.010	(51.5)	3.015	(76.6)	4.031	(102.4)	6.031	(153.2)
B – Min.	0.31	(7.9)	0.53	(13.5)	0.66	(16.8)	0.95	(24.1)
D	0.25	(6.4)	0.49	(12.4)	0.63	(16.0)	0.87	(22.1)
F – Max.	0.71	(18.0)	1.10	(27.9)	1.44	(36.6)	2.03	(51.6)
L – Max.	1.09	(27.7)	1.73	(43.9)	2.25	(57.2)	3.03	(77.0)
T	0.25	(6.4)	0.40	(10.2)	0.48	(12.2)	0.70	(17.8)
X	0.47	(11.9)	0.74	(18.8)	1.00	(25.4)	1.28	(32.5)
X_a	0.37	(9.4)	0.51	(13.0)	0.64	(16.3)	0.83	(21.1)
Z	0.51	(13.0)	0.79	(20.1)	1.07	(27.2)	1.35	(34.3)
Minimum ultimate tensile strength, lb (kN)	6,000	(27)	22,000	(98)	42,000	(187)	72,000	(320)
No. of chain pitches in standard measuring length	60	(60)	40	(40)	30	(30)	20	(20)
Standard measuring length								
Max.	121.85	(3095.0)	121.85	(3095.0)	121.68	(3090.7)	121.37	(3082.8)
Min.	120.10	(3050.5)	120.10	(3050.5)	120.43	(3058.9)	120.37	(3057.4)
Measuring load, lb (kN)	100	(0.4)	100	(0.4)	200	(0.9)	300	(1.3)

CAUTION: The numerical values in this table must be read in conjunction with the definition and explanatory note appearing in Section 6, "Dimensions for Chain Links." The M.U.T.S. values do not provide a sufficient or appropriate basis for determining chain application.

Copyright ASME International
Provided by IHS under license with ASME
No reproduction or networking permitted without license from IHS
Not for Resale

TABLE 4 MODIFIED X-TYPE DROP FORGED RIVETLESS CHAIN
General Chain Dimensions, Minimum Ultimate Strength Rating, Strand Length, and Measuring Load for Checking Chain Lengths

	Dimensions, in. (mm)					
	X348 (X75-13)		X458 (X100-16)		X678 (X150-22)	
Chain No.	in.	(mm)	in.	(mm)	in.	(mm)
Reference pitch	3	(75)	4	(100)	6	(150)
P	3.015	(76.6)	4.031	(102.4)	6.031	(153.2)
B –Min.	0.53	(13.5)	0.66	(16.8)	0.95	(24.1)
C –Min.	1.59	(40.4)	2.31	(58.7)	3.34	(84.8)
D	0.49	(12.4)	0.63	(16.0)	0.87	(22.1)
F –Max.	1.10	(27.9)	1.44	(36.6)	2.03	(51.6)
L –Max.	1.73	(43.9)	2.25	(57.2)	3.03	(77.0)
T	0.40	(10.2)	0.48	(12.2)	0.70	(17.8)
X	0.74	(18.8)	1.00	(25.4)	1.28	(32.5)
X_a	0.51	(13.0)	0.64	(16.3)	0.83	(21.1)
Z	0.79	(20.1)	1.07	(27.2)	1.35	(34.3)
Minimum ultimate tensile strength, lb (kN)	22,000	(98)	42,000	(187)	72,000	(320)
No. of chain pitches in standard measuring length	40	(40)	30	(30)	20	(20)
Standard measuring length (in.)						
Max.	121.85	(3095.0)	121.68	(3090.7)	121.37	(3082.8)
Min.	120.10	(3050.5)	120.43	(3058.9)	120.37	(3057.4)
Measuring load, lb (kN)	100	(0.4)	200	(0.9)	300	(1.3)

CAUTION: The numerical values in this table must be read in conjunction with the definition and explanatory note appearing in Section 6, "Dimesions for Chain Links." The M.U.T.S. values do not provide a sufficient or appropriate basis for determining chain application.

TABLE 5 SPROCKETS:
Maximum Eccentricity and Face Runout at Root Diameter

Pitch Diameter						Max. Face Runout TIR		Max. Eccentricity TIR	
Over, in.		Including, in.	Over, mm		Including, mm	in.	mm	in.	mm
0	up to	12	0	up to	305	0.06	1.52	0.09	2.29
12	up to	24	305	up to	610	0.12	3.05	0.15	3.81
24	up to	36	610	up to	915	0.20	5.08	0.21	5.33
36	up to	48	915	up to	1220	0.30	7.62	0.27	6.86
48	up to	60	1220	up to	1524	0.33	8.38	0.33	8.38
60	up to	72	1524	up to	1830	0.36	9.14	0.39	9.91

GENERAL NOTE: For pitch diameter over 72 in. (1830 mm), consult manufacturer.

Copyright ASME International
Provided by IHS under license with ASME
No reproduction or networking permitted without license from IHS Not for Resale

TABLE 6 SPROCKET FACTORS

N	θ, deg	D_{pf}	*K*
4	0	2.613	1.20
5	2	3.236	1.16
6	3	3.863	1.14
7	4	4.494	1.12
8	5	5.125	1.11
9	6	5.758	1.10

TABLE 7 SPROCKET TOOTH FORM

Chain Number	Chain Pitch, *P*	Tooth Face, W_t	Equivalent Barrel Diameter, *d*	$C_p/2$ [Note (1)]	*G* [Note (1)]	*H* [Note (1)]	*R* [Note (1)]
228	2.010	3/8	23/32	5/32	1	11/64	9/64
348	3.015	5/8	1 1/16	1/4	1 1/2	3/16	3/16
458	4.031	7/8	1 3/8	3/8	2	3/16	1/4
468	4.031	1 3/8	1 7/8	3/8	2	3/16	1/4
658	6.031	7/8	1 3/8	1/2	3	1/4	5/16
678	6.031	1 1/16	2	1/2	3	1/4	5/16
698	6.031	1 3/8	2 9/16	1/2	3	1/4	5/16
998	9.031	1 3/8	2 17/32	3/4	4 1/2	1/4	7/16
9118	9.031	1 3/4	3 1/8	3/4	4 1/2	1/4	7/16

GENERAL NOTE: Dimensions in inches.

NOTE:
(1) For other values of $C_p/2$, *G*, *H*, and *R*, use the following:

$C_p/2 = P/12$ $\quad H = P/96 + 5/32$
$G = P/2$ $\quad R = P/24 + 1/16$

Copyright ASME International
Provided by IHS under license with ASME
No reproduction or networking permitted without license from IHS
Not for Resale

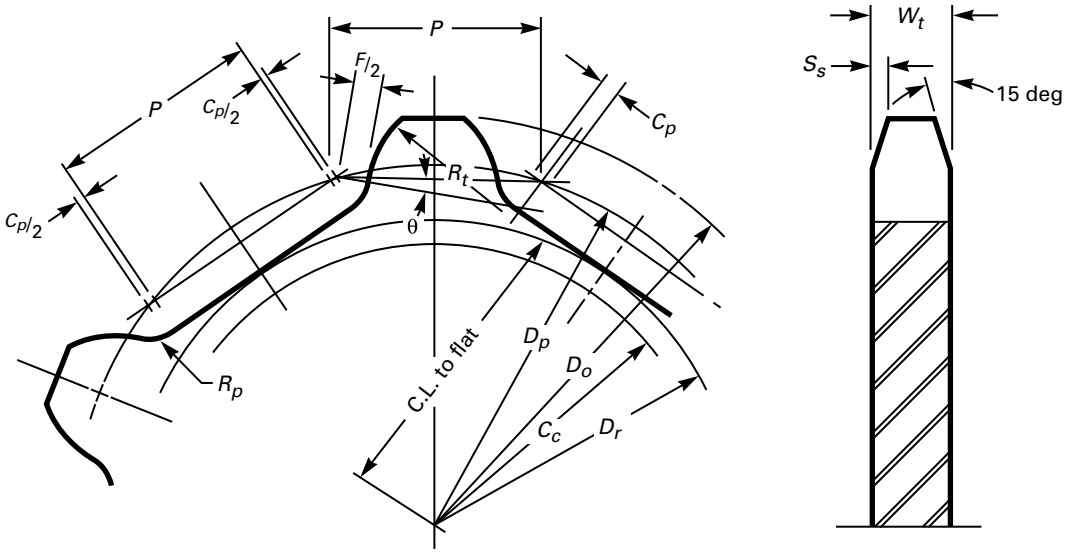

The elements of sprocket tooth form may be determined by the following:

Pitch diameter, $D_p = P \times D_{pf}$
Root diameter (max.), $D_r = 2 \times$ (C.L. to Flat)

$$\text{C.L. to Flat} = \sqrt{\left(\frac{D_p}{2}\right)^2 - \left(\frac{p}{2}\right)^2} - \frac{1}{2}F$$

Chain clearance circle (max.), $C_c = 2 \times$ (C.L. to Flat) – 1/4 in. (6.4 mm)
Outside diameter, $D_o = D_p \times$ K (see Table 6)
Total pitch line clearance, $C_p = D$
Pitch diameter factor, $D_{pf} =$ (see Table 6)
Topping radius, $R_t = 0.63 \times P$
Pressure angle, $\theta =$ (see Table 6)

$$\text{Pocket radius (max.)}, R_p = \frac{F}{2}$$

Total width (max.), $W_t = 0.95 \times Z$
Side slope, $S_s =$ approx. $0.12 \times W_t$ [not to exceed 0.38 in. (9.6 mm)]

Nomenclature:
D = pin diameter (see Tables 2, 3, 4)
$D_{pf} = \text{cosecant } \frac{180}{N_p}$
F = chain height (see Tables 2, 3, 4)
N_p = number of pitches = $2 \times N_t$
N_t = number of sprocket teeth
P = chain pitch (see Tables 2, 3, 4)
Z = width between sidebars (see Tables 2, 3, 4)

FIG. 6 SPROCKET TOOTH FORM A

Copyright ASME International
Provided by IHS under license with ASME
No reproduction or networking permitted without license from IHS Not for Resale

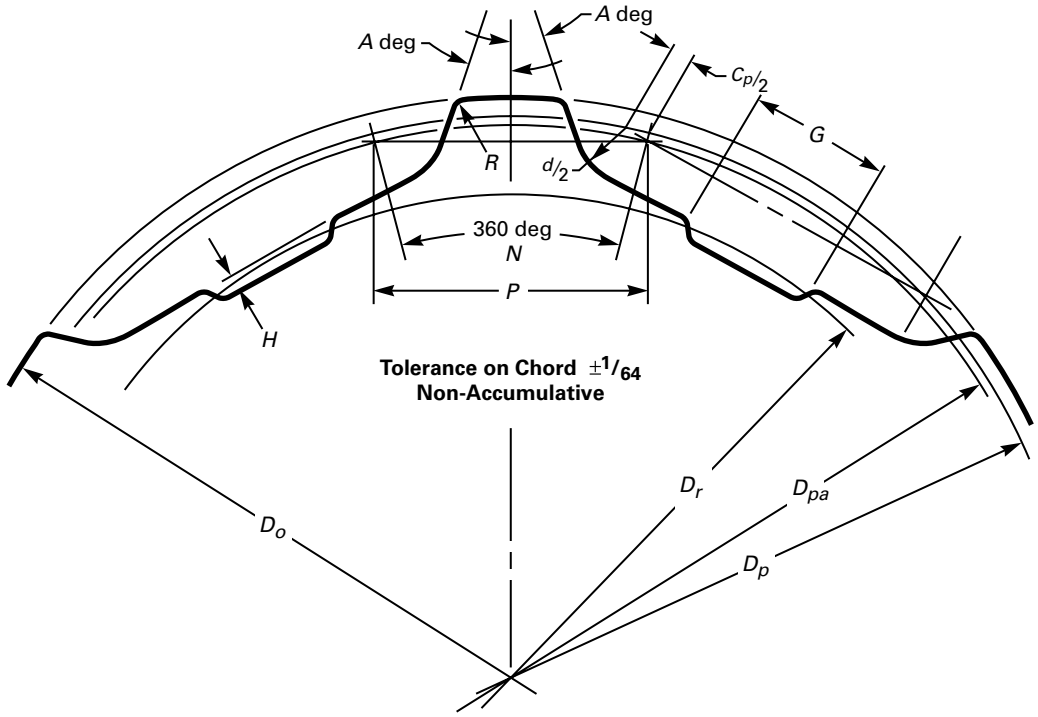

Values of Angle A

N_p	6	8	10	12	14	16	18	20	22	24	26	28	30	32	34	36	38	40	42	44	46	48	50
A deg	18	19	20	21	22	23	24	24	25	25	26	26	27	27	28	28	29	29	29	30	30	30	31

$$D_p = P \times \text{cosecant} \frac{180 \text{ deg}}{N_p}$$
$$= P \times D_{pf}$$

where P = chain pitch
N_p = number of pitches
N_t = number of teeth = $N_p/2$
$D_{pa} = 0.9985 \times D_p$
$D_r = \left(D_p \times \text{cosine} \frac{180 \text{ deg}}{N_p}\right) - \text{d}$
$D_o = D_r + (2 \times d)$

FIG. 7 SPROCKET TOOTH FORM B

Copyright ASME International
Provided by IHS under license with ASME
No reproduction or networking permitted without license from IHS
Not for Resale

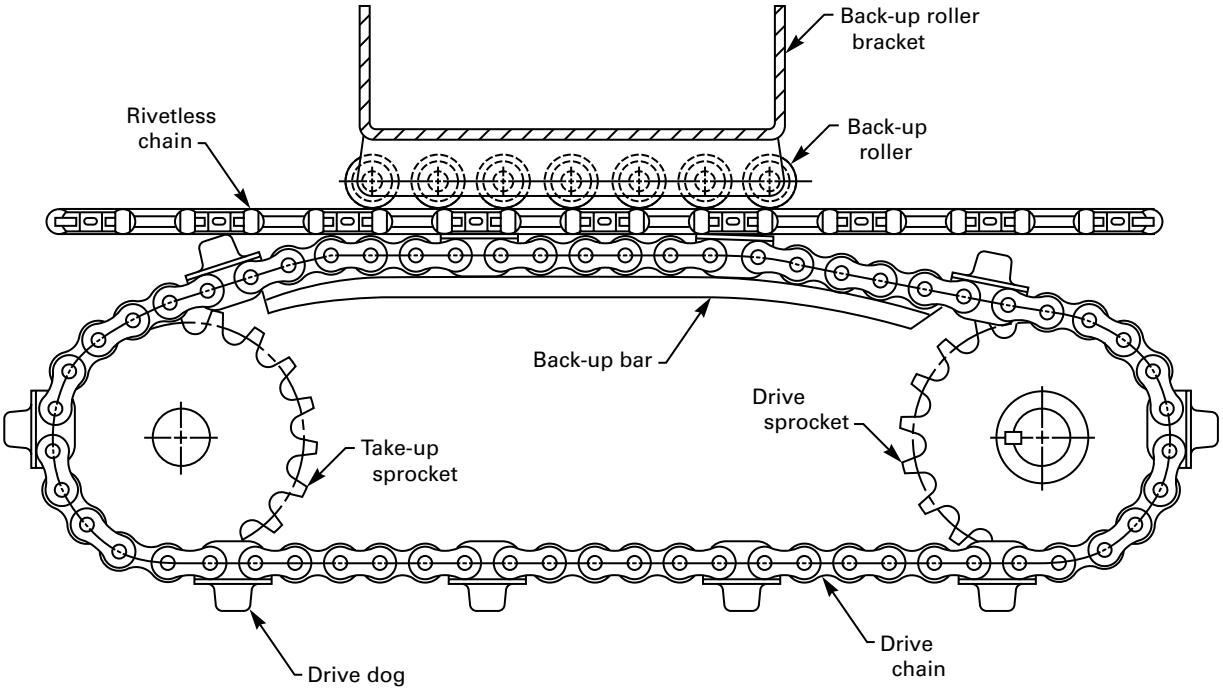

FIG. 8 DRIVE

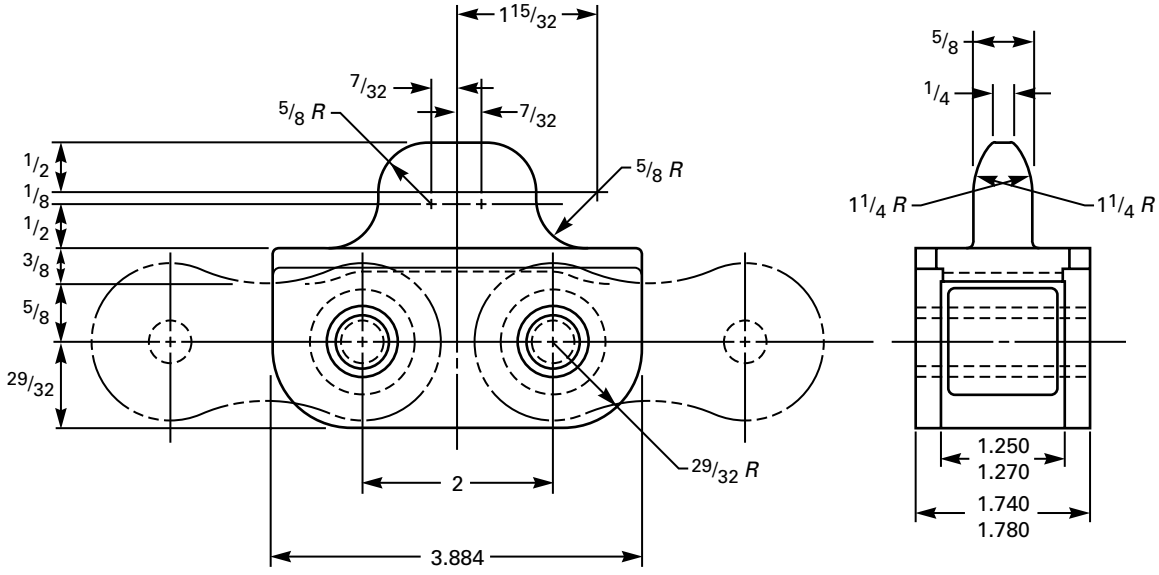

FIG. 9 X 348 AND 348 DOG

Copyright ASME International
Provided by IHS under license with ASME
No reproduction or networking permitted without license from IHS Not for Resale

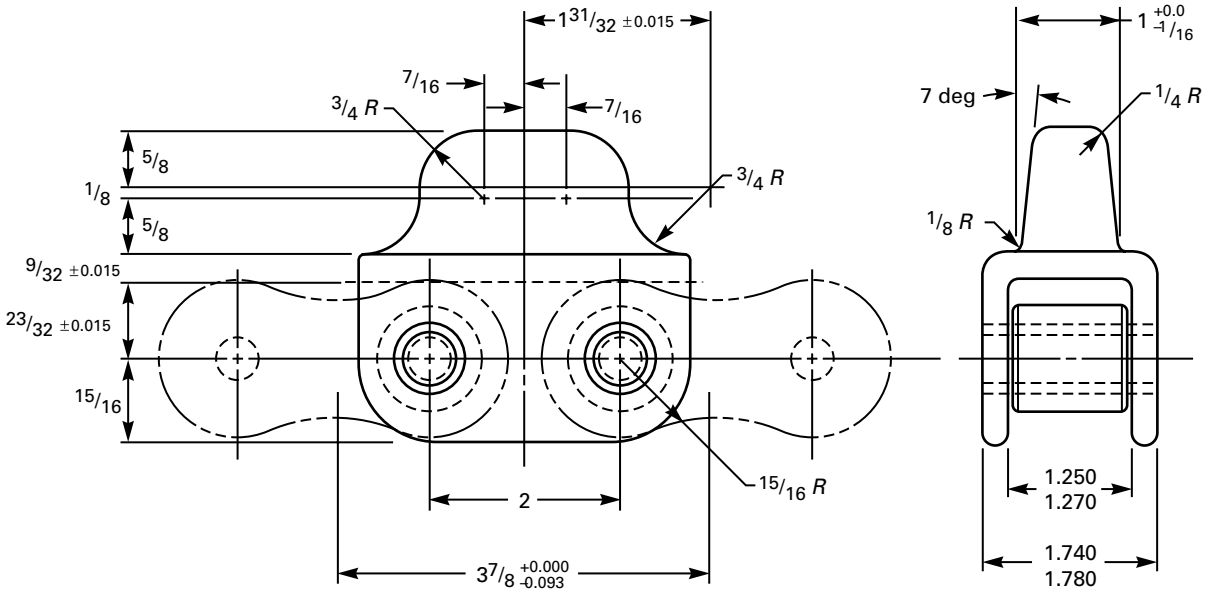

FIG. 10 X 458 AND 458 DOG

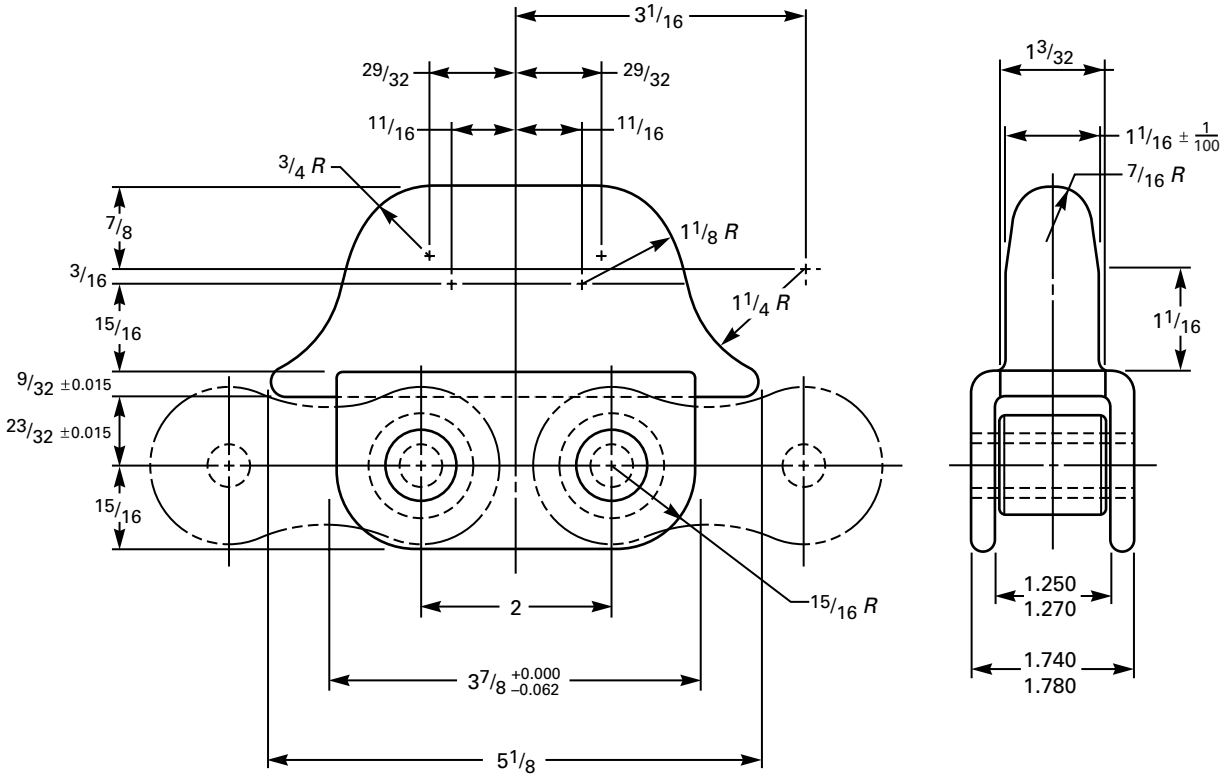

FIG. 11 X 678 AND 678 DOG

Copyright ASME International
Provided by IHS under license with ASME
No reproduction or networking permitted without license from IHS
Not for Resale

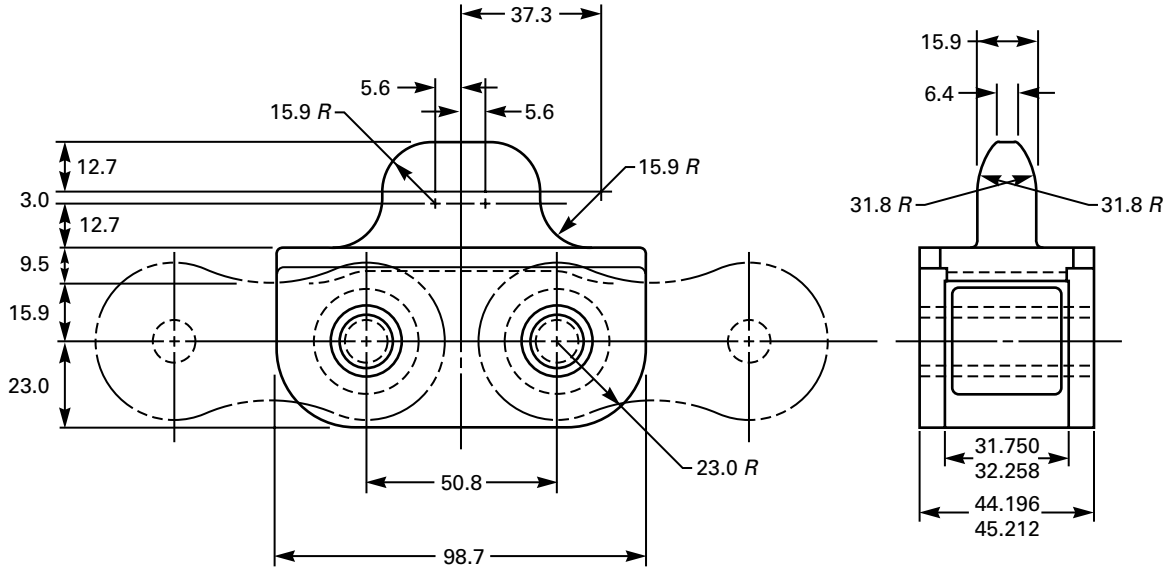

FIG. 12 X 100-16 AND 100-16 DOG

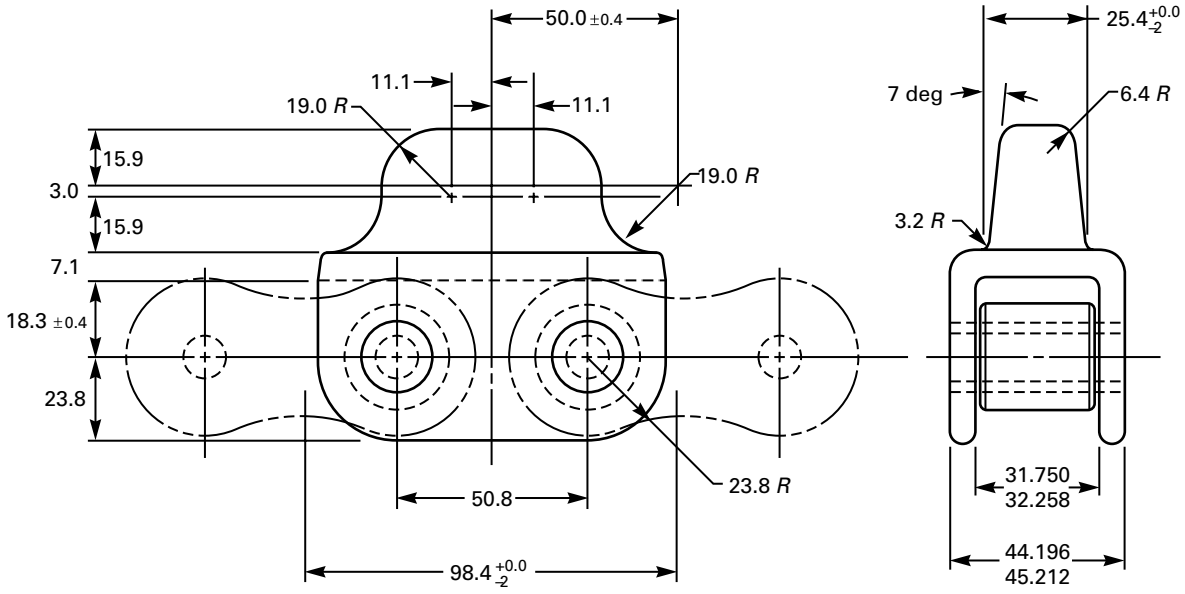

FIG. 13 X 75-13 AND 75-13 DOG

Copyright ASME International
Provided by IHS under license with ASME
No reproduction or networking permitted without license from IHS Not for Resale

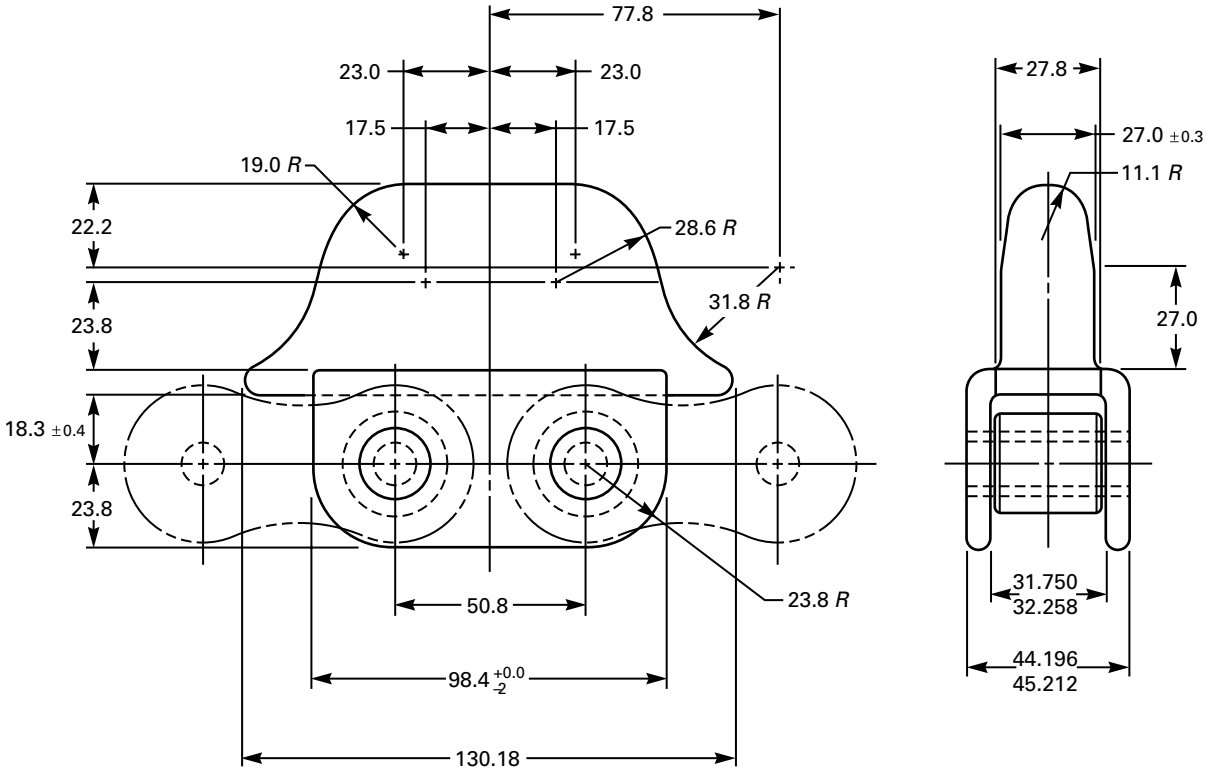

FIG. 14 X 150-22 AND 150-22 DOG

Copyright ASME International
Provided by IHS under license with ASME
No reproduction or networking permitted without license from IHS
Not for Resale

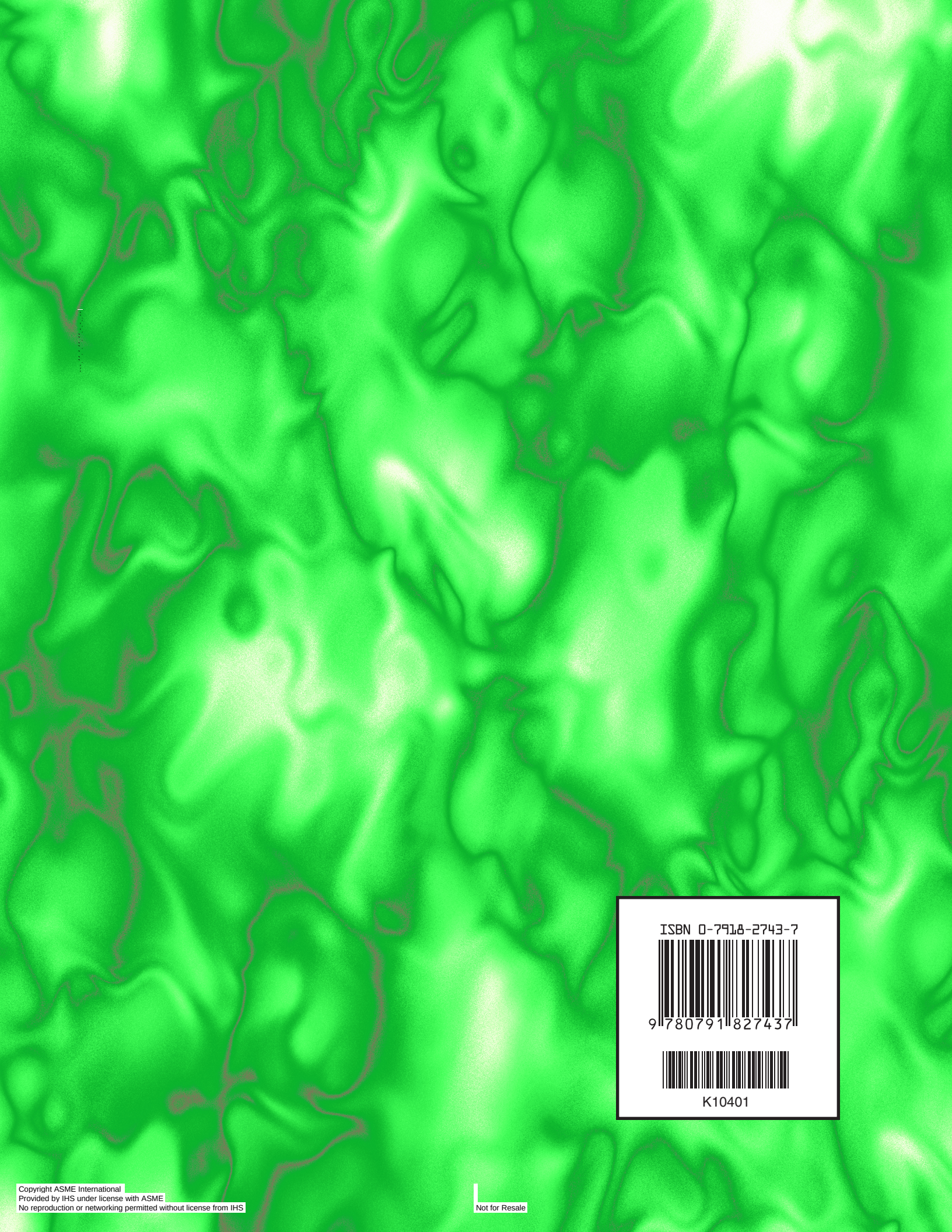
ISBN 0-7918-2743-7
9 780791 827437
K10401

Copyright ASME International
Provided by IHS under license with ASME
No reproduction or networking permitted without license from IHS

Not for Resale