Erratum
to
ASME B29.100-2002
Precision Power Transmission, Double-Pitch Power Transmission, and Double-Pitch Conveyor Roller Chains, Attachments, and Sprockets

On page 4, para. 1.5, last paragraph, **0.0015 in./ft** should read **0.015 in./ft.** The correct paragraph is presented below.

Overlength tolerance is $0.001/(\text{pitch in inches})^2 + 0.015$ in./ft.
See para. 2.3 for tolerance of chain with attachments.

THE AMERICAN SOCIETY OF MECHANICAL ENGINEERS
Three Park Avenue, New York, NY 10016-5990

January 2004

K0151E

Copyright ASME International
Provided by IHS under license with ASME
No reproduction or networking permitted without license from IHS

Not for Resale

--`,,,-`-`,,`,,`,`,,`---

Copyright ASME International
Provided by IHS under license with ASME
No reproduction or networking permitted without license from IHS
Not for Resale

ASME B29.100-2002

PRECISION POWER TRANSMISSION, DOUBLE-PITCH POWER TRANSMISSION, AND DOUBLE-PITCH CONVEYOR ROLLER CHAINS, ATTACHMENTS, AND SPROCKETS

Incorporating ASME B29.1, ASME B29.3, and ASME B29.4

AN AMERICAN NATIONAL STANDARD

The American Society of Mechanical Engineers

Copyright ASME International
Provided by IHS under license with ASME
No reproduction or networking permitted without license from IHS
Not for Resale

Date of Issuance: May 12, 2003

This Standard will be revised when the Society approves the issuance of a new edition. There will be no addenda issued to this edition.

ASME issues written replies to inquiries concerning interpretations of technical aspects of this Standard. Interpretations are published on the ASME Web site under the Committee Pages at http://www.asme.org/codes/ as they are issued.

ASME is the registered trademark of The American Society of Mechanical Engineers.

This code or standard was developed under procedures accredited as meeting the criteria for American National Standards. The Standards Committee that approved the code or standard was balanced to assure that individuals from competent and concerned interests have had an opportunity to participate. The proposed code or standard was made available for public review and comment that provides an opportunity for additional public input from industry, academia, regulatory agencies, and the public-at-large.

ASME does not "approve," "rate," or "endorse" any item, construction, proprietary device, or activity.

ASME does not take any position with respect to the validity of any patent rights asserted in connection with any items mentioned in this document, and does not undertake to insure anyone utilizing a standard against liability for infringement of any applicable letters patent, nor assume any such liability. Users of a code or standard are expressly advised that determination of the validity of any such patent rights, and the risk of infringement of such rights, is entirely their own responsibility.

Participation by federal agency representative(s) or person(s) affiliated with industry is not to be interpreted as government or industry endorsement of this code or standard.

ASME accepts responsibility for only those interpretations of this document issued in accordance with the established ASME procedures and policies, which precludes the issuance of interpretations by individuals.

No part of this document may be reproduced in any form,
in an electronic retrieval system or otherwise,
without the prior written permission of the publisher.

The American Society of Mechanical Engineers
Three Park Avenue, New York, NY 10016-5990

Copyright © 2003 by
THE AMERICAN SOCIETY OF MECHANICAL ENGINEERS
All rights reserved
Printed in U.S.A.

Copyright ASME International
Provided by IHS under license with ASME
No reproduction or networking permitted without license from IHS

Not for Resale

CONTENTS

Foreword iv
Standards Committee Roster vii
Correspondence With the B29 Committee viii

ASME B29.1 Precision Power Transmission Roller Chains, Attachments, and Sprockets 1

ASME B29.3 Double-Pitch Power Transmission Roller Chains and Sprockets 51

ASME B29.4 Double-Pitch Conveyor Roller Chains, Attachments, and Sprockets 72

--`,,,`-`-`,,`,,`,`,,`---

Copyright ASME International
Provided by IHS under license with ASME
No reproduction or networking permitted without license from IHS

Not for Resale

FOREWORD

The B29 Standards Committee agreed to propose a draft standard to consolidate and revise the following three chain standards: ASME B29.1M, Precision Power Transmission Roller Chains, Attachments, and Sprockets; ASME B29.3M, Double-Pitch Power Transmission Roller Chains and Sprockets; and ASME B29.4M, Double-Pitch Conveyor Roller Chains, Attachments, and Sprockets. The new standard was designated ASME B29.100-2002 and was approved as an American National Standard on April 3, 2002.

B29.1. The original design of precision roller chain dates back to the late 1890s, although various types of drive chains have been in use for centuries. The early automobiles used roller chain extensively as the final drive. The industrial use for roller chain grew substantially, resulting in the desirability of standardization. The perfected American Standard Chain of today has evolved to meet the demand for ever-increasing horsepower and higher speeds, as well as accurate timing.

In 1913 the Society of Automotive Engineers published formulas for calculating the roller chain length, sprocket tooth profiles, and other important design criteria. Recommendations from the Roller Chain Committee of the American Society of Mechanical Engineers followed in 1917 with dimensional standards for the various components and assemblies. Early in 1920, through the cooperation of these two groups, roller chain standards were formulated and recommended for acceptance by industry. The progress was followed in 1921 by organization of a sprocket committee of the American Gear Manufacturers Association.

ASA Sectional Committee B29, Transmission Chain, Sprockets, and Cutters, was organized in 1924 by the American Standards Association with ASME, AGMA, and SAE as sponsors. A subcommittee on roller chain was established to study modern practices of roller chain manufacture and use. Its recommendations on standards were approved by the Sectional Committee in May 1929 and approved by the American Standards Association in July 1930. They were published as B29a-1930, Roller Chain, Sprockets, and Cutters. This roller chain standard assured interchangeability and optional sources of supply.

In 1930 the Association of Roller and Silent Chain Manufacturers (ARSCM) was founded. The objectives of the association were to cooperate in developing standards of sound engineering and manufacturing practice, to foster improvements in chain performance, and to extend the use of roller chain. This association was subsequently dissolved in 1960 and its members became part of the American Sprocket Chain Manufacturers Association (ASCMA), which was organized to bring together manufacturers of all types of sprocket-driven chain. The name of this group was changed in 1971 to American Chain Association.

As a result of combined industry research programs sponsored by ARSCM, starting in 1946 and continuing under ASCMA, greater predictability of roller chain drive service life has been achieved. These studies provided greater knowledge of such roller chain characteristics as link plate endurance strengths, roller impact forces, dynamic tension forces, operating efficiency, wear life of well-lubricated drives at various speeds and loads, pin–bushing interaction at high speeds, and the phenomenon of chain joint galling. This scientific exploration produced such vast gains in the technical knowledge of capabilities of roller chain that increases in horsepower ratings were possible. The wear studies, for example, have shown that a separating film of lubricant is formed in chain joints in a manner similar to that found in journal bearings. These studies thus opened a region of chain application at high speeds which had previously been thought to be impractical. The direct result of this research has been the continual increase in chain horsepower ratings contained in Nonmandatory Appendix A. The Appendix also contains suggestions concerning the application and use of the chains covered by this Standard.

This Standard covers transmission roller chains, attachments, and sprockets. It is intended to facilitate fulfillment of the needs of users, distributors, and manufacturers of chain sprocket drives on a sound economic basis and in a manner consistent with sound engineering and manufacturing practices.

Copyright ASME International
Provided by IHS under license with ASME
No reproduction or networking permitted without license from IHS
Not for Resale

Control dimensions are given in this Standard to assure interchangeability between chains, sprockets, and chain links as supplied by different manufacturers. Information for the guidance of users in the application of these drives is also included.

In addition to its customary usage as a power transmission medium, precision roller chain has also been adapted for use in conveying, elevating, indexing, and timing operations. Modifications of standard chain parts to perform these functions are known as *attachments.* To assure interchangeability of the more commonly used attachments, standardization of certain principal dimensions was initiated in 1947. This information, formerly published as a separate standard, was incorporated into this precision roller chain standard.

In tabulating dimensional information in this Standard, customary inch-pound units have been used. Additionally, companion tabulations have been included in order to provide translations of these values into metric (SI) units in accordance with ASME Guide SI-1, ASME Orientation and Guide for Use of SI (Metric) Units. For this reason, certain formulas and relationships have been intentionally presented only in customary units so as to preclude any ambiguity between them and the tabulated values.

ASME/ANSI B29.1M-1986 was approved by the American National Standards Institute on January 9, 1986.

ASME B29.1M-1993 included two significant modifications. The first was a revision to the definition of minimum ultimate tensile strength that clarified the meaning and use of the term. The second was a revision to the listed values for maximum pin diameter and minimum hole in bushing. These changes do not affect the interchangeability of the chains. The values were changed to provide a rational basis for conversion between conventional (inch) and SI (metric) dimensions. With concurrent changes in the related ISO standards, a long-standing area of potential discrepancies is eliminated. ASME B29.1M-1993 was approved by the American National Standards Institute on August 10, 1993.

ASME B29.100-2002 includes four significant modifications to B29.1: a revision to the minimum ultimate tensile strength definition, the addition of minimum dynamic strength and conformance test requirements for chains specified in this Standard, the addition of requirements for roller chain preloading, and a revision to the note in para. A1.8. The revision recognizes the need for the user to contact the roller chain manufacturer for specific derating factors for slip-fit connecting links, offset sections, and offset links. Similar changes are being made to International Standard ISO 606 to be in close agreement with this Standard.

B29.3. For many years, roller chain manufacturers furnished for specific installations an economical power transmission chain differing only in pitch from the standardized series of transmission roller chains which conformed to American Standard ASA B29.1.

Such practice became so common and the chains of such universal use that in 1948 the Roller Chain Technical Committee of the Association of Roller and Silent Chain Manufacturers, now known as the American Chain Association, developed standards which were submitted for adoption as an American Standard.

This Standard describes a limited series of double-pitch power transmission roller chains which supplements the base chain series conforming to the standard B29.1. These chains differ from the base chains only in pitch, which is double that of the corresponding base chain.

Supplementary information in Appendix A on speed and power transmission ratings indicates their special usefulness for drives operating at slow to moderate speeds, with moderate loads and long center distances.

In tabulating dimensional information in this Standard, customary inch-pound units have been used. Additionally, companion tabulations have been included in order to provide translations of these values into metric (SI) units in accordance with ASME Guide SI-1, ASME Orientation and Guide for Use of SI (Metric) Units. For this reason, certain formulas and relationships have been intentionally presented only in customary units so as to preclude any ambiguity between them and the tabulated values.

ASME B29.3M-1994 incorporated a restatement of the definition of minimum ultimate tensile strength, and minor changes in the values for maximum pin diameter and minimum bushing inner diameter. The dimensional changes were to allow a direct error-free conversion from customary inch units to metric (SI) units. Similar changes were made in the International Standard ISO 1275. ASME B29.3M-1994 was approved by the American National Standards Institute on March 15, 1994.

Copyright ASME International
Provided by IHS under license with ASME
No reproduction or networking permitted without license from IHS
Not for Resale

ASME B29.100-2002 includes three significant modifications to B29.3: a revision to the minimum ultimate tensile strength definition, the addition of the requirements for roller chain preloading, and the removal of some sprocket data that is identical to B29.1. The sprocket information sections have been revised to reference the appropriate sections of B29.1 sprocket data.

B29.4. For many years, roller chain manufacturers have furnished a substantial volume of precision steel roller chains and sprockets of a limited series for specific conveying applications. Such chains consist of pins and bushings identical to American National Standard B29.1 transmission roller chains; rollers identical to or, alternatively, approximately twice as large in diameter as those of such transmission roller chains; and link plates with straight-edged contours, extended in pitch to be double the pitch of those of the corresponding transmission roller chains conforming to the latest edition of B29.1. (Such chains are referred to in this Standard as base series chains.)

These double-pitch steel conveyor chains have frequently been assembled with some parts of modified design to adapt the chains for use in conveying, elevating, or timing operations. The parts most commonly modified are pin link plates, roller link plates, and pins.

Previously, variation in link plate thickness, attachment link plate hole size and location, diameter and length of extension pins, and sprocket details caused lack of interchangeability and tended to restrict users to one source of supply. For these reasons, the Association of Roller and Silent Chain Manufacturers began to develop a standard in 1947. It was approved as an American National Standard on May 30, 1972, and supplemented B29.1.

In tabulating dimensional information in the present revision, customary inch-pound units have been used. Additionally, companion tabulations have been included that are metric (SI) conversions of these units in accordance with ASME Guide SI-1, ASME Orientation and Guide for Use of SI (Metric) Units. Certain formulas and relationships have been intentionally presented only in customary units to preclude any ambiguity between them and the tabulated values.

Nonmandatory Appendix A includes suggestions on application and use of chains covered by this Standard. The information on conveyor capacity ratings indicates the special usefulness of these chains and attachment links for slow-speed conveyor applications.

ASME B29.4M-1994, which was approved by the American National Standards Institute on March 15, 1994, incorporated a restatement of the definition of minimum ultimate tensile strength, and minor changes in the values for maximum pitch diameter and minimum bushing inner diameter. The dimensional changes are to allow a direct error-free conversion from customary inch units to metric (SI) units. Similar changes were made in the International Standard ISO 1275.

ASME B29.100-2002 includes three significant modifications to B29.4: a revision to the minimum ultimate tensile strength definition, the addition that roller chains conforming to this Standard should be preloaded at the discretion of the manufacturer or by agreement between the manufacturer and the user, and the removal of some sprocket data that is identical to B29.1. The sprocket information sections have been revised to reference the appropriate sections of B29.1 sprocket data.

Copyright ASME International
Provided by IHS under license with ASME
No reproduction or networking permitted without license from IHS
Not for Resale

ASME STANDARDS COMMITTEE B29
Chains, Attachments, and Sprockets for Power Transmission and Conveying

(The following is the roster of the Committee at the time of approval of this Standard.)

OFFICERS

J. L. Wright, *Chair*
C. G. Springman, *Vice Chair*
M. Lo, *Secretary*

COMMITTEE PERSONNEL

W. C. Hall, Ramsey Products Corp.
L. E. Hampel, Allied-Locke Industries
M. Lo, The American Society of Mechanical Engineers
A. M. McCarty, Emerson Power Transmission
D. Moore, Jeffrey Chain Co.
R. W. Neuhengen, Drives, Inc.
V. D. Petershack
R. A. Reinfried, Conveyor Equipment Manufacturers Association
S. Rhoad, Webster Industries, Inc.
R. J. Rothchild, U.S. Tsubaki
K. J. Smith, Drives, Inc.
C. G. Springman, Diamond Chain Co.
J. L. Wright, Diamond Chain Co.

Copyright ASME International
Provided by IHS under license with ASME
No reproduction or networking permitted without license from IHS
Not for Resale

CORRESPONDENCE WITH THE B29 COMMITTEE

General. ASME Standards are developed and maintained with the intent to represent the consensus of concerned interests. As such, users of this Standard may interact with the Committee by requesting interpretations, proposing revisions, and attending Committee meetings. Correspondence should be addressed to:

Secretary, B29 Standards Committee
The American Society of Mechanical Engineers
Three Park Avenue
New York, NY 10016-5990

Proposing Revisions. Revisions are made periodically to the Standard to incorporate changes that appear necessary or desirable, as demonstrated by the experience gained from the application of the Standard. Approved revisions will be published periodically.

The Committee welcomes proposals for revisions to this Standard. Such proposals should be as specific as possible, citing the paragraph number(s), the proposed wording, and a detailed description of the reasons for the proposal, including any pertinent documentation.

Interpretations. Upon request, the B29 Committee will render an interpretation of any requirement of the Standard. Interpretations can only be rendered in response to a written request sent to the Secretary of the B29 Standards Committee.

The request for interpretation should be clear and unambiguous. It is further recommended that the inquirer submit his/her request in the following format:

Subject:	Cite the applicable paragraph number(s) and the topic of the inquiry.
Edition:	Cite the applicable edition of the Standard for which the interpretation is being requested.
Question:	Phrase the question as a request for an interpretation of a specific requirement suitable for general understanding and use, not as a request for an approval of a proprietary design or situation. The inquirer may also include any plans or drawings which are necessary to explain the question; however, they should not contain proprietary names or information.

Requests that are not in this format will be rewritten in this format by the Committee prior to being answered, which may inadvertently change the intent of the original request.

ASME procedures provide for reconsideration of any interpretation when or if additional information that might affect an interpretation is available. Further, persons aggrieved by an interpretation may appeal to the cognizant ASME Committee or Subcommittee. ASME does not "approve," "certify," "rate," or "endorse" any item, construction, proprietary device, or activity.

Attending Committee Meetings. The B29 Standards Committee regularly holds meetings, which are open to the public. Persons wishing to attend any meeting should contact the Secretary of the B29 Standards Committee.

Copyright ASME International
Provided by IHS under license with ASME
No reproduction or networking permitted without license from IHS
Not for Resale

ASME B29.1

1	**Roller Chain**	2
2	**Attachments**	9
3	**Sprockets**	11

Figures

1	Precision Power Transmission Roller Chain and Components	3
2	Offset Link Plate	9
3	Attachments	9
4	Types of Sprockets	12
5	Sprocket Flange Location and Thickness	15
6	Theoretical Tooth Form	18
7	Sprocket Diameters	21

Tables

1A, B	General Chain Dimensions	4
2A, B	Maximum Width Over Regular Pin	6
3A, B	Dimensional Limits for Interchangeable Chain Links	7
4A, B	Straight Link Plate Extension Dimensions	10
5A, B	Bent Link Plate Extension Dimensions	11
6	Extended Pin Dimensions	12
7A, B	Sprocket Tooth Section Profile Dimensions of Commercial and Precision Sprockets	13
8A, B	Maximum Eccentricity and Face Runout Tolerances for Commercial Sprockets (Measured as Total Indicator Reading)	16
8C, D	Maximum Eccentricity and Face Runout Tolerances for Precision Sprockets (Measured as Total Indicator Reading)	16
9A, B	Sprocket Flange Thickness	17
10A, B	Seating Curve Dimensions and Tolerances	20
11A, B	Minus Tolerances on the Caliper Diameters of Commercial Sprockets for Various Numbers of Teeth	22
11C, D	Minus Tolerances on the Caliper Diameters of Precision Sprockets for Various Numbers of Teeth	23
12	Pitch Diameter, Outside Diameter, and Measuring Dimension Factor for Chain of Unity Pitch	24
13A, B	Whole Depth of Topping Hob Cut *WD* for Each Pitch and Range	27

Nonmandatory Appendix

A	Supplementary Information	29

Copyright ASME International
Provided by IHS under license with ASME
No reproduction or networking permitted without license from IHS
Not for Resale

PRECISION POWER TRANSMISSION ROLLER CHAINS, ATTACHMENTS, AND SPROCKETS

CAUTION: The standardized chains listed in this Standard are intended primarily for power transmission and conveying purposes, and should not be used as replacements for chains used on overhead hoists. See ASME B29.24M, Roller Load Chains for Overhead Hoists, for information relating to roller chains specifically intended for overhead hoisting duty.

1 ROLLER CHAIN

1.1 Nomenclature

The following definitions are illustrated in Fig. 1.

connecting link (cotter pin type): an outside link consisting of a pin link plate *E*, two assembled pins *G-G*, a detachable pin link plate *D*, and two cotters *H-H*. Three types of detachable pin link plates are available; one with a slip fit, one with a degree of press fit (drive fit), and one with a full press fit (as in conventional chain construction).

connecting link (spring clip type): a connecting link generally as described above, except that the detachable link plate is retained by a one-piece spring clip *K* that engages grooves cut in the ends of the pins.

offset link: a link consisting of two offset link plates *I*, a bushing *B*, a roller *C*, a removable pin *J*, and cotter *H*.

offset section: a two-link section consisting of a roller link and an offset link, which are connected by a riveted press-fit pin.

pin link: an outside link consisting of two pin link plates *E-E* assembled with two pins *F-F*.

roller chain: a series of alternately assembled roller links and pin links in which the pins articulate inside the bushings and the rollers are free to turn on the bushings. Pins and bushings are press fit in their respective link plates. Roller chain may be *single strand*, having one row of roller links, or *multiple strand*, having more than one row of roller links, and in which center plates *L* are located between the strands of roller links. Center plates may be slip fit or press fit on the pin as agreed between the chain manufacturer and user.

roller link: an inside link consisting of two roller link plates *A-A*, two bushings *B-B*, and two rollers *C-C*.

1.2 General Proportions

(a) The roller diameter is approximately $\frac{5}{8}$ × pitch.

(b) The *chain width* is defined as the distance between roller link plates and equals approximately $\frac{5}{8}$ × chain pitch.

(c) The pin diameter is approximately $\frac{5}{16}$ × pitch or one-half of the roller diameter.

(d) The thickness of link plates for the standard series is approximately $\frac{1}{8}$ × pitch.

(e) The thickness of link plates for the heavy series chain of any pitch is approximately that of the next larger pitch standard series chain.

(f) The maximum height of roller link plates is 0.95 × pitch.

(g) The maximum height of pin link plates is 0.82 × pitch.

(h) Although chamfers are shown on the link plates illustrated, chamfering is not a requirement and is done at the option of the manufacturer.

1.3 Numbering System –Standard Chain Numbers

For the chains shown in this Standard, the right-hand digit in the chain designation is zero for roller chains of the usual proportions, 1 for a lightweight chain, and 5 for a rollerless bushing chain. The numbers to the left of the right-hand digit denote the number of $\frac{1}{8}$ in. in the pitch. The letter H following the chain number denotes the heavy series. The hyphenated number 2 suffixed to the chain number denotes a double strand; 3, a triple strand; 4, a quadruple strand chain; etc.

Heavy series chains made in $\frac{3}{4}$ in. (19.05 mm) and larger pitches differ from the standard series in thickness of link plates. Their value is only in the acceptance of higher loads during operation at lower speeds.

1.4 Chain Strength Requirements

1.4.1 Minimum Ultimate Tensile Strength

(a) Single Strand Chain. Standard series single strand chains meeting the requirements of this Standard will have a minimum ultimate tensile strength equal to or greater than the values listed in Table 1A or 1B.

(b) Multiple Strand Chain. For multiple strand chain, the minimum ultimate tensile strength equals that of a single strand multiplied by the number of strands.

Copyright ASME International
Provided by IHS under license with ASME
No reproduction or networking permitted without license from IHS
Not for Resale

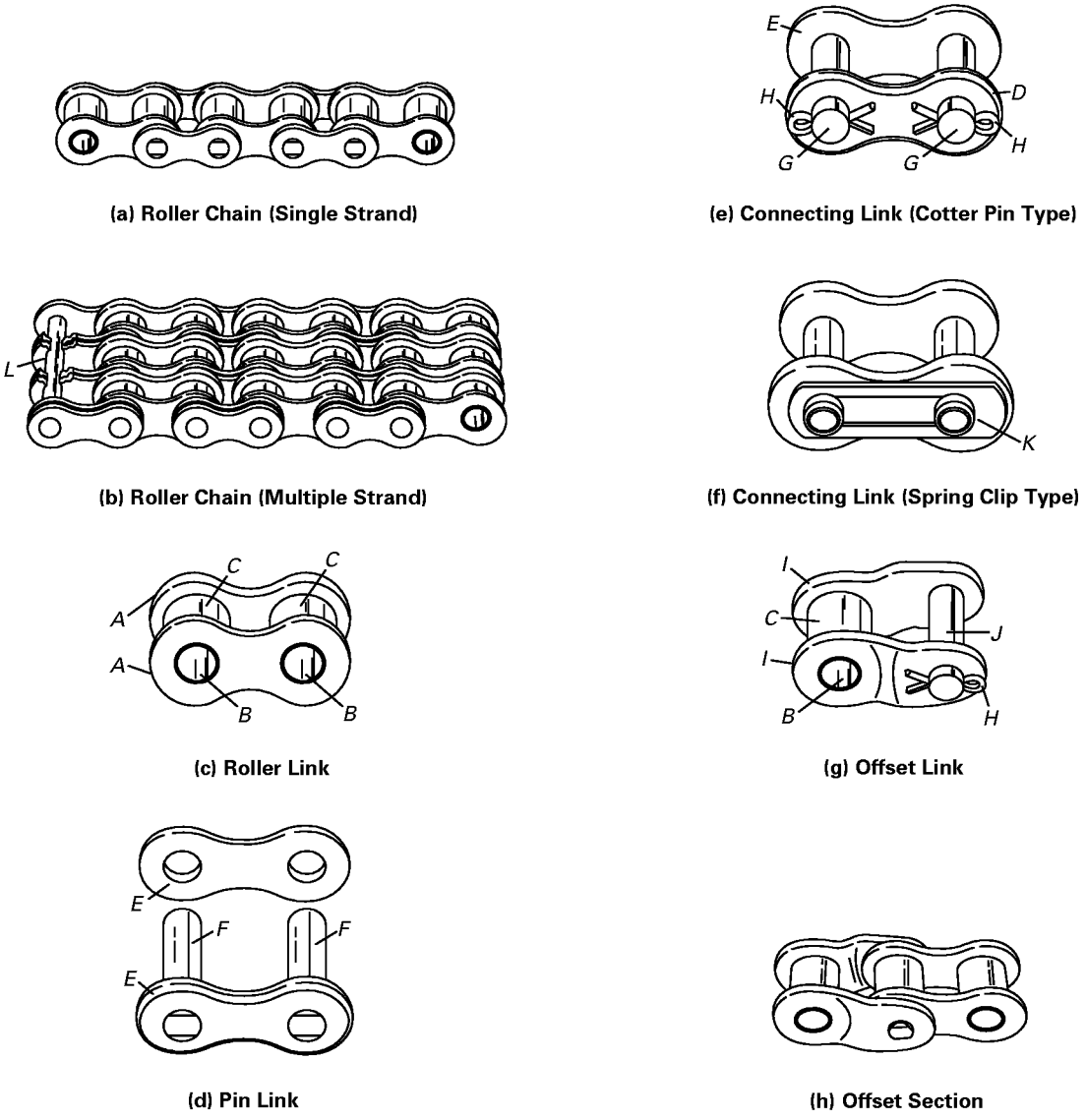

(a) Roller Chain (Single Strand)

(e) Connecting Link (Cotter Pin Type)

(b) Roller Chain (Multiple Strand)

(f) Connecting Link (Spring Clip Type)

(c) Roller Link

(g) Offset Link

(d) Pin Link

(h) Offset Section

Fig. 1 Precision Power Transmission Roller Chain and Components

(c) Lightweight Chain. Lightweight chain designated as No. 41 does not conform to the general chain proportions. The minimum ultimate tensile strength is 1500 lb (6.67 kN).

(d) Minimum Ultimate Tensile Strength (M.U.T.S) for chain covered by this Standard is the minimum force at which an unused, undamaged chain could fail when subjected to a single tensile loading test.

WARNING: The minimum ultimate tensile strength is NOT a "working load." The M.U.T.S. greatly exceeds the maximum force that may be applied to the chain.

(1) Test Procedure. A tensile force is slowly applied at a rate not to exceed 2.0 in./min (50.8 mm/min), in a uniaxial direction, to the ends of the chain sample.

(2) The Tensile Test Is a Destructive Test. Even though the chain may not visibly fail when subjected to the minimum tensile force, it will have been damaged and will be unfit for service.

1.4.2 Minimum Dynamic Strength

(a) Application. Only single strand standard and heavy series chains are subject to the minimum dynamic strength requirement. Multiple strand chains, attachment chains, connecting links, and offset links are not subject to the minimum dynamic strength requirement.

(b) Conformance. The chain shall survive a conformance test at the load listed for the subject chain in Table 1A or 1B.

WARNING: The dynamic test values are not valid characteristics for designing actual applications. Neither the specified value nor the test results are to be interpreted as allowable working loads.

(c) Test Procedure. The chain shall be tested according to the conformance test described in ASME B29.26-2001.

Copyright ASME International
Provided by IHS under license with ASME
No reproduction or networking permitted without license from IHS
Not for Resale

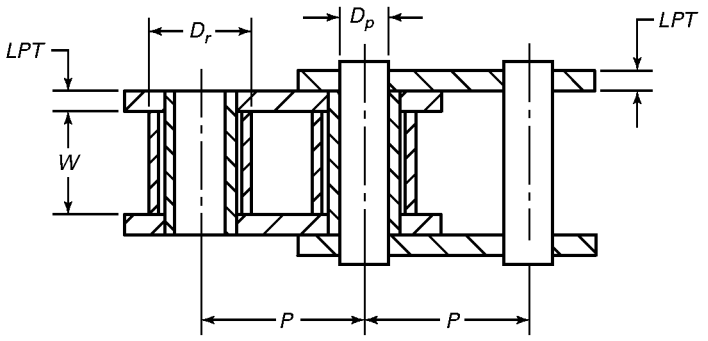

D_p = pin diameter
D_r = roller diameter
LPT = link plate thickness
P = chain pitch
W = chain width between roller link plates

Table 1A General Chain Dimensions, in. and lb

Standard Chain No.	Pitch P	Max. Roller Diameter D_r	Nominal Width W (1)	Nominal Pin Diameter D_p	Link Plate Thickness LPT		Length Tolerance, in./ft	Measuring Load, lb (2)	M.U.T.S., Standard and Heavy Series, lb (3)	Min. Dyn. Strength, Standard Series, lb	Min. Dyn. Strength, Heavy Series, lb
					Standard Series	Heavy Series					
25	0.250	0.130 (4)	0.125	0.0905	0.030	. . .	0.031	18	780	140	. . .
35	0.375	0.200 (4)	0.188	0.141	0.050	. . .	0.022	18	1,760	320	. . .
41	0.500	0.306	0.250	0.141	0.050	. . .	0.019	18	1,500	305	. . .
40	0.500	0.312	0.312	0.156	0.060	. . .	0.019	31	3,125	560	. . .
50	0.625	0.400	0.375	0.200	0.080	. . .	0.018	49	4,880	870	. . .
60	0.750	0.469	0.500	0.234	0.094	0.125	0.017	70	7,030	1,230	1,420
80	1.000	0.625	0.625	0.312	0.125	0.156	0.016	125	12,500	2,150	2,400
100	1.250	0.750	0.750	0.375	0.156	0.187	0.016	195	19,530	3,280	3,590
120	1.500	0.875	1.000	0.437	0.187	0.219	0.015	281	28,125	4,620	5,000
140	1.750	1.000	1.000	0.500	0.219	0.250	0.015	383	38,280	6,140	6,560
160	2.000	1.125	1.250	0.562	0.250	0.281	0.015	500	50,000	7,820	8,290
180	2.250	1.406	1.406	0.687	0.281	0.312	0.015	633	63,280	9,650	10,200
200	2.500	1.562	1.500	0.781	0.312	0.375	0.015	781	78,125	11,600	12,700
240	3.000	1.875	1.875	0.937	0.375	0.500	0.015	1,000	112,500	15,800	18,300

NOTES:
(1) See Table 3A for decimal minimum dimensions.
(2) For single strand chain.
(3) See Caution on p. 2.
(4) Bushing diameter, as these chains have no rollers.

WARNING: The dynamic test is a destructive test. Even though the chain may survive the test without failure, it will have been damaged and will be unfit for service.

1.4.3 Chain Preloading. Chains conforming to this Standard shall be preloaded during manufacturing by applying a tensile force equal to a minimum of 30% of the M.U.T.S. given in Table lA or 1B.

1.5 Tolerance for Chain Length

New chains, under standard measuring load, shall not be underlength.

Overlength tolerance is 0.001/(pitch in inches)^2 + 0.0015 in./ft. See para. 2.3 for tolerance of chain with attachments.

1.6 Measuring Load

Measuring load is the load under which the chain is to be measured for length. It is equal to 1% of the minimum ultimate tensile strength, with a minimum of 18 lb (80 N) and a maximum of 1000 lb (4.45 kN), for both single and multiple strand chain. Length measurements are to be taken over a length of at least 12 in. (300 mm).

Copyright ASME International
Provided by IHS under license with ASME
No reproduction or networking permitted without license from IHS
Not for Resale

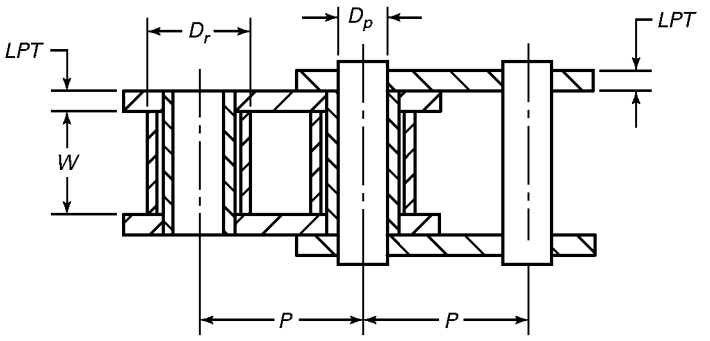

D_p = pin diameter
D_r = roller diameter
LPT = link plate thickness
P = chain pitch
W = chain width between roller link plates

Table 1B General Chain Dimensions, mm and N

Standard Chain No.	Pitch P	Max. Roller Diameter D_r	Nominal Width W (1)	Nominal Pin Diameter D_p	Link Plate Thickness LPT		Length Tolerance, mm/m	Measuring Load, N (2)	M.U.T.S., Standard and Heavy Series, N (3)	Min. Dyn. Strength, Standard Series, N	Min. Dyn. Strength, Heavy Series, N
					Standard Series	Heavy Series					
25	6.35	3.30 (4)	3.18	2.30	0.76	...	2.583	80	3 470	630	...
35	9.525	5.08 (4)	4.78	3.58	1.27	...	1.833	80	7 830	1 410	...
41	12.70	7.77	6.35	3.58	1.27	...	1.583	80	6 670	1 340	...
40	12.70	7.92	7.92	3.96	1.52	...	1.583	138	13 900	2 480	...
50	15.88	10.16	9.53	5.08	2.03	...	1.500	218	21 710	3 850	...
60	19.05	11.91	12.70	5.94	2.39	3.18	1.417	311	31 270	5 490	6 330
80	25.40	15.88	15.88	7.92	3.18	3.96	1.333	556	55 600	9 550	10 700
100	31.75	19.05	19.05	9.53	3.96	4.75	1.333	867	86 870	14 600	16 000
120	38.10	22.23	25.40	11.10	4.75	5.56	1.250	1 250	125 100	20 500	22 200
140	44.45	25.40	25.40	12.70	5.56	6.35	1.250	1 704	170 270	27 300	29 200
160	50.80	28.58	31.75	14.27	6.35	7.14	1.250	2 224	222 400	34 800	36 900
180	57.15	35.71	35.71	17.45	7.14	7.92	1.250	2 816	281 470	42 900	45 200
200	63.50	39.68	38.10	19.84	7.92	9.53	1.250	3 474	347 500	51 600	56 600
240	76.20	47.63	47.63	23.80	9.53	12.70	1.250	4 448	500 400	70 500	81 400

NOTES:
(1) See Table 3B for decimal minimum dimensions.
(2) For single strand chain.
(3) See Caution on p. 2.
(4) Bushing diameter, as these chains have no rollers.

1.7 General Chain Dimensions

See Tables 1A and 1B.

1.8 Maximum Chain Dimensions

See Tables 2A and 2B.

1.9 Dimensional Limits for Interchangeability of Links

See Tables 3A and 3B. To assure interchangeability of links produced by different makers of chain, the following standard maximum and minimum limits are adopted.

(a) Minimum distance between roller link plates is the nominal width of the chain minus the quantity (0.002 + 0.003 × pitch).

(b) Maximum pin diameter: see Tables 3A and 3B.

(c) Minimum hole in bushing: see Tables 3A and 3B.

(d) Maximum width of roller link = nominal width of chain + (2.12 × nominal link plate thickness).

(e) Minimum distance between pin link plates = maximum width of roller link + 0.002 in.

(f) Nominal transverse pitch of multiple strand chain = nominal width of chain + (4.22 × nominal link plate thickness).

Copyright ASME International
Provided by IHS under license with ASME
No reproduction or networking permitted without license from IHS
Not for Resale

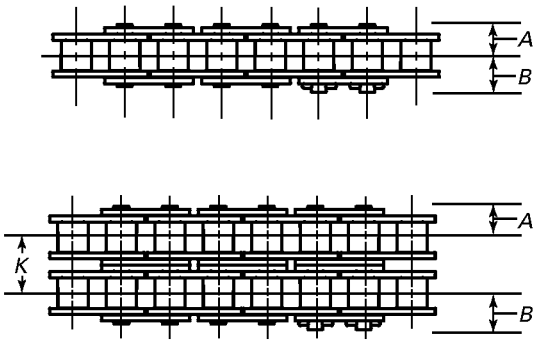

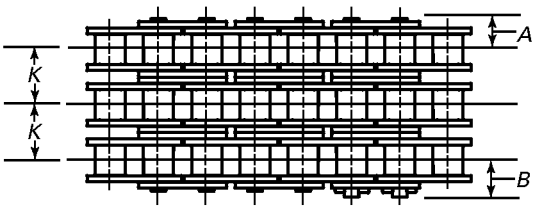

A = maximum half-width of outboard chain strand with regular pin
B = maximum half-width of outboard chain strand with connecting pin
K = nominal transverse pitch (from Table 8A or 8B)
N = number of strands

Table 2A Maximum Width Over Regular Pin, in.

Standard Chain Number	$(N-1)K + 2A$ for Number of Chain Strands						Add for Conn. Pin Head
	1	2	3	4	6	8	
25	0.36	0.61	0.86	1.11	1.62	2.12	0.10
35	0.52	0.92	1.32	1.72	2.51	3.31	0.12
41	0.59	. . .	. . .	. . .	. . .	. . .	0.13
40	0.70	1.27	1.83	2.40	3.53	4.66	0.13
50	0.86	1.57	2.29	3.00	4.42	5.85	0.15
60	1.06	1.95	2.85	3.75	5.54	7.34	0.17
80	1.34	2.49	3.65	4.80	7.10	9.41	0.20
100	1.62	3.03	4.44	5.84	8.66	11.48	0.23
120	2.03	3.82	5.61	7.40	10.97	14.55	0.27
140	2.19	4.11	6.04	7.96	11.81	15.66	0.30
160	2.60	4.90	7.21	9.51	14.12	18.73	0.34
180	2.91	5.50	8.09	10.69	15.87	21.05	0.37
200	3.16	5.98	8.80	11.61	17.25	22.88	0.40
240	3.86	7.31	10.77	14.23	21.15	28.06	0.47
60H	1.19	2.22	3.24	4.27	6.33	8.38	0.17
80H	1.47	2.75	4.04	5.32	7.88	10.45	0.20
100H	1.75	3.29	4.83	6.37	9.45	12.52	0.23
120H	2.16	4.09	6.01	7.94	11.78	15.63	0.27
140H	2.32	4.38	6.43	8.49	12.60	16.71	0.30
160H	2.73	5.17	7.60	10.04	14.91	19.79	0.34
180H	3.04	5.76	8.49	11.21	16.66	22.10	0.37
200H	3.43	6.51	9.59	12.68	18.84	25.01	0.40
240H	4.38	8.37	12.35	16.34	24.31	32.28	0.47

GENERAL NOTE: Maximum diameter of chain on sprockets = sprocket pitch diameter + (0.95 × chain pitch).

Table 2B Maximum Width Over Regular Pin, mm

Standard Chain Number	$(N-1)K + 2A$ for Number of Chain Strands						Add for Conn. Pin Head
	1	2	3	4	6	8	
25	9.1	15.5	21.9	28.3	41.1	53.9	2.5
35	13.2	23.3	33.4	43.6	63.8	84.1	2.9
41	15.0	. . .	. . .	. . .	. . .	. . .	3.4
40	17.8	32.1	46.5	60.9	89.6	118.4	3.4
50	21.8	39.9	58.0	76.2	112.4	148.6	3.8
60	26.8	49.6	72.4	95.2	140.8	186.3	4.2
80	34.0	63.3	92.6	121.9	180.4	239.0	5.1
100	41.2	76.9	112.7	148.5	220.0	291.5	5.9
120	51.5	97.0	142.4	187.8	278.7	369.6	6.8
140	55.6	104.5	153.4	202.2	300.0	397.7	7.7
160	66.0	124.5	183.1	241.6	358.7	475.8	8.5
180	73.9	139.8	205.6	271.4	403.1	534.8	9.4
200	80.3	151.9	223.4	295.0	438.1	581.2	10.2
240	97.9	185.8	273.6	361.4	537.1	712.8	11.9
60H	30.2	56.3	82.4	108.5	160.7	212.9	4.2
80H	37.3	69.9	102.5	135.1	200.3	265.4	5.1
100H	44.5	83.6	122.7	161.8	239.9	318.1	5.9
120H	54.9	103.8	152.7	201.5	299.3	397.0	6.8
140H	58.9	111.1	163.3	215.5	319.9	424.3	7.7
160H	69.3	131.2	193.1	255.0	378.8	502.6	8.5
180H	77.3	146.4	215.6	284.7	423.1	561.4	9.4
200H	87.1	165.4	243.7	322.0	478.6	635.2	10.2
240H	111.3	212.5	313.8	415.0	617.4	819.9	11.9

GENERAL NOTE: Maximum diameter of chain on sprockets = sprocket pitch diameter + (0.95 × chain pitch).

Copyright ASME International
Provided by IHS under license with ASME
No reproduction or networking permitted without license from IHS
Not for Resale

Copyright ASME International
Provided by IHS under license with ASME
No reproduction or networking permitted without license from IHS

Table 3A Dimensional Limits for Interchangeable Chain Links, in.

Standard Chain No. Chain Pitch	25 0.250	35 0.375	41 0.500	40 0.500	50 0.625	60 0.750	80 1.000	100 1.250	120 1.500	140 1.750	160 2.000	180 2.250	200 2.500	240 3.000
Min. distance between roller link plates	0.122	0.184	0.246	0.309	0.370	0.495	0.620	0.744	0.993	0.993	1.242	1.397	1.490	1.864
Max. width of roller link, standard series	0.189	0.294	0.357	0.440	0.545	0.699	0.890	1.081	1.396	1.464	1.780	2.002	2.161	2.670
Max. width of roller link, heavy series	...	...	...	...	...	0.765	0.956	1.146	1.464	1.530	1.846	2.067	2.295	2.935
Min. distance between pin link plates, standard series	0.191	0.296	0.359	0.442	0.547	0.701	0.892	1.083	1.398	1.466	1.782	2.004	2.163	2.672
Min. distance between pin link plates, heavy series	...	...	...	...	...	0.767	0.958	1.148	1.466	1.532	1.848	2.069	2.297	2.937
Max. pin diameter	0.0909	0.1417	0.1417	0.1567	0.2004	0.2346	0.3126	0.3756	0.4374	0.5004	0.5626	0.6874	0.7815	0.9374
Min. hole in bushing	0.0921	0.1425	0.1425	0.1575	0.2016	0.2354	0.3134	0.3764	0.4386	0.5016	0.5634	0.6886	0.7823	0.9386
Min. value of *X* for offset link plates (see Fig. 2)	0.104	0.156	0.171	0.208	0.260	0.311	0.415	0.518	0.622	0.725	0.828	0.931	1.033	1.238
Min. value of *Y* for offset link plates (see Fig. 2)	0.121	0.181	0.198	0.240	0.300	0.360	0.480	0.600	0.719	0.839	0.958	1.077	1.195	1.433

Not for Resale

Table 3B Dimensional Limits for Interchangeable Chain Links, mm

Standard Chain No. Chain Pitch	25 6.35	35 9.52	41 12.70	40 12.70	50 15.88	60 19.05	80 25.40	100 31.75	120 38.10	140 44.45	160 50.80	180 57.15	200 63.50	240 76.20
Min. distance between roller link plates	3.10	4.68	6.25	7.85	9.40	12.58	15.75	18.90	25.23	25.23	31.55	35.49	37.85	47.35
Max. width of roller link, standard series	4.80	7.46	9.06	11.17	13.84	17.75	22.60	27.45	35.45	37.18	45.21	50.85	54.88	67.81
Max. width of roller link, heavy series	...	...	...	...	...	19.43	24.28	29.10	37.18	38.86	46.88	52.50	58.29	74.54
Min. distance between pin link plates, standard series	4.85	7.52	9.12	11.23	13.89	17.81	22.66	27.51	35.51	37.24	45.26	50.90	54.94	67.87
Min. distance between pin link plates, heavy series	...	...	...	...	...	19.48	24.33	29.16	37.24	38.91	46.94	52.55	58.34	74.60
Max. pin diameter	2.31	3.60	3.60	3.98	5.09	5.96	7.94	9.54	11.11	12.71	14.29	17.46	19.85	23.81
Min. hole in bushing	2.34	3.62	3.62	4.00	5.12	5.98	7.96	9.56	11.14	12.74	14.31	17.49	19.87	23.84
Min. value of *X* for offset link plates (see Fig. 2)	2.65	3.97	4.35	5.29	6.61	7.90	10.55	13.16	15.80	18.42	21.04	23.65	26.24	31.45
Min. value of *Y* for offset link plates (see Fig. 2)	3.08	4.60	5.03	6.10	7.62	9.15	12.20	15.24	18.27	21.32	24.34	27.36	30.36	36.40

Copyright ASME International
Provided by IHS under license with ASME
No reproduction or networking permitted without license from IHS

Not for Resale

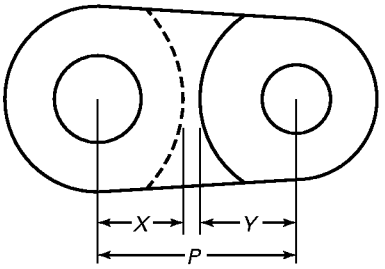

P = chain pitch
X min. = $0.41P$ + clearance
Y min. = $0.475P$ + clearance
clearance = $0.001 + 0.004P$

GENERAL NOTE: Clearance shall never be less than 0.002 in. (0.05 mm) nor more than 0.008 in. (0.20 mm), regardless of formula.

Fig. 2 Offset Link Plate

(g) Standard offset links are made to accommodate chains having roller link plates with a maximum height equal to 0.95 × pitch, and pin link plates with a maximum height equal to 0.82 × pitch. Therefore, the standard minimum values of X and Y are shown in Fig. 2.

(h) Lightweight chain designated as No. 41 does not conform to the general chain proportions. Roller link plates have a maximum height of 0.390 in. (9.91 mm) and pin link plates have a maximum height of 0.335 in. (8.51 mm).

2 ATTACHMENTS

2.1 Nomenclature

Attachments are modifications to standard chain components to adapt the chains for use in conveying, elevating, and timing operations. The components commonly modified are the link plates, which are provided with extended lugs, and the chain pins, which are extended in length so as to project substantially beyond the outer surface of the pin link plates (see Fig. 3).

2.2 General Proportions

Standardized attachments are available for transmission roller chain, $\frac{3}{8}$ in. (9.52 mm) through 2 in. (50.8 mm) pitch inclusive, and $2\frac{1}{2}$ in. (63.5 mm) pitch. The standardized dimensions conform approximately to the following formulas. It is recommended that these formulas be applied when extending these standards to additional sizes of chain.

(a) Distance from centerline of hole in straight link plate extension to pitch line:

$$D = 1 \times \text{chain pitch}$$

(b) Distance from centerline of hole in bent link plate extension to chain centerline:

$$D = 1 \times \text{chain pitch}$$

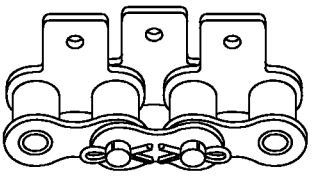

(a) Straight Link Plate Extensions on One Side of Chain

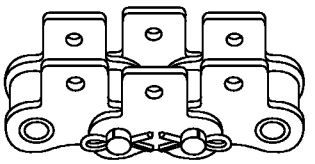

(b) Straight Link Plate Extensions on Both Sides of Chain

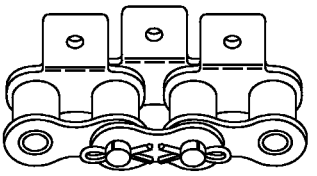

(c) Bent Link Plate Extensions on One Side of Chain

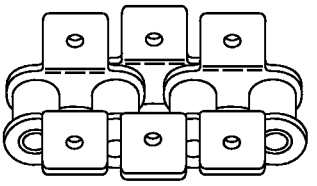

(d) Bent Link Plate Extensions on Both Sides of Chain

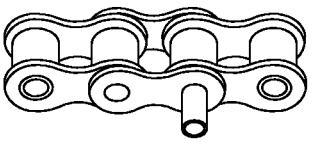

(e) Extended Pin on One Side of Chain

Fig. 3 Attachments

(c) Distance from top of bent link plate extension to pitch line:

$$C = 0.625 \times \text{chain pitch}$$

(d) Angle of bend of link plate extension equals 90 deg.

(e) Diameter of pin extension:

$$D_p = \text{nominal diameter of chain pin}$$

Copyright ASME International
Provided by IHS under license with ASME
No reproduction or networking permitted without license from IHS
Not for Resale

(*f*) Length of pin extension:

$$L = 0.750 \times \text{chain pitch}$$

2.3 Tolerance for Chain Length

New chains with attachments, under standard measuring load, shall not be underlength.

Overlength tolerance equals 0.002/(pitch in inches)^2 + 0.030 in./ft. Length tolerance shall conform to the tabulation below:

Standard Chain No.	Length Tolerance	
	in./ft	mm/m
35	0.044	3.67
40	0.038	3.17
50	0.035	2.92
60	0.034	2.83
80	0.032	2.67
100	0.031	2.58
120	0.031	2.58
140	0.031	2.58
160	0.031	2.58
200	0.030	2.50

2.4 Straight Link Plate Extension Dimensions

See Tables 4A and 4B.

2.5 Bent Link Plate Extension Dimensions

See Tables 5A and 5B.

2.6 Extended Pin Dimensions

See Table 6.

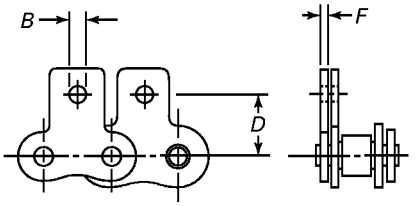

(a) Straight Link Plate Extensions on One Side of Chain

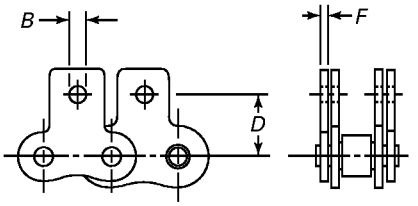

(b) Straight Link Plate Extensions on Both Sides of Chain

Table 4A Straight Link Plate Extension Dimensions, in.

Standard Chain No.	*B*, min.	*D*	*F*
35	0.102	0.375	0.050
40	0.131	0.500	0.060
50	0.200	0.625	0.080
60	0.200	0.719	0.094
80	0.261	0.969	0.125
100	0.323	1.250	0.156
120	0.386	1.438	0.188
140	0.448	1.750	0.219
160	0.516	2.000	0.250
200	0.641	2.500	0.312

Table 4B Straight Link Plate Extension Dimensions, mm

Standard Chain No.	*B*, min.	*D*	*F*
35	2.60	9.52	1.27
40	3.33	12.70	1.52
50	5.08	15.88	2.03
60	5.08	18.26	2.39
80	6.63	24.61	3.18
100	8.21	31.75	3.96
120	9.81	36.53	4.78
140	11.38	44.45	5.56
160	13.11	50.80	6.35
200	16.29	63.50	7.92

Copyright ASME International
Provided by IHS under license with ASME
No reproduction or networking permitted without license from IHS

Not for Resale

3 SPROCKETS

3.1 Types of Sprockets

The four principal types of sprockets are designated in Fig. 4.

3.2 Classes of Sprockets

This Standard provides for two classes of sprockets, commercial and precision. Use of commercial or precision sprockets is a matter of drive application judgment. The usual moderate-to-slow speed commercial drive is adequately served by commercial sprockets. Where extreme high speed in combination with high load is involved, or where the drive involves fixed centers, critical timing or register problems, or close clearance with outside interference, then the use of precision sprockets may be more appropriate.

As a general guide, drives requiring Type A or Type B lubrication would be served by commercial sprockets. Drives requiring Type C lubrication may require precision sprockets, although even here commercial may be satisfactory. Consult the manufacturer. Types of lubrication are shown in the horsepower ratings tables (Tables A4 through A17) provided in Nonmandatory Appendix A.

3.3 Tooth Section Profile

The tooth section profile, Sections A and B of Tables 7A and 7B, shows the recommended chamfering of sprocket teeth for roller chains. All sprocket flanges are to be chamfered to provide guidance of the chain onto the sprocket in case of misalignment due to sprocket misalignment or permissible flange weave. Flange chamfer may be as in Section A or B, or anything in between. The sprocket chamfer dimensions R_c, g, and h are noncritical and are given only as a guide for general design proportions.

3.4 Sprocket Flange Location and Thickness

See Fig. 5 and Tables 8A, 8B, 8C, 8D, 9A, and 9B.

3.5 Tooth Form Dimensions

The tooth form shown in Fig. 6 is a theoretical form for the specific number of teeth N and is designed so that the chain, as it wears and elongates, will ride out toward the tips of the teeth. Because of the variety of ways to produce sprocket teeth, the actual teeth may not exactly match the theoretical form. In the case of space cutters or milling cutters, it is common practice to design cutters to cut a form for an intermediate number of teeth for one of five ranges. This results in the cutter, the sprocket, and the theoretical form matching only at 56 teeth. In the case of hobs or shapers, the

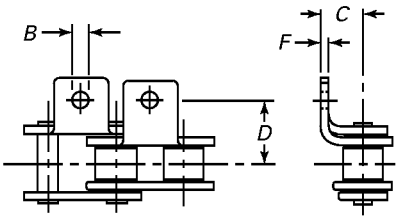

(a) Bent Link Plate Extensions on One Side of Chain

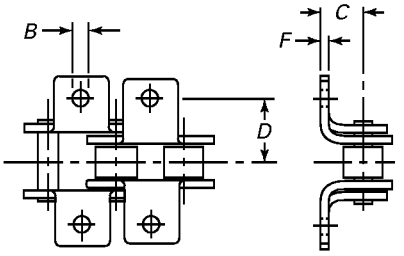

(b) Bent Link Plate Extensions on Both Sides of Chain

Table 5A Bent Link Plate Extension Dimensions, in.

Standard Chain No.	*B*, min.	*C*	*D*	*F*
35	0.102	0.250	0.375	0.050
40	0.131	0.312	0.500	0.060
50	0.200	0.406	0.625	0.080
60	0.200	0.469	0.750	0.094
80	0.261	0.625	1.000	0.125
100	0.323	0.781	1.250	0.156
120	0.386	0.906	1.500	0.188
140	0.448	1.125	1.750	0.219
160	0.516	1.250	2.000	0.250
200	0.641	1.688	2.500	0.312

Table 5B Bent Link Plate Extension Dimensions, mm

Standard Chain No.	*B*, min.	*C*	*D*	*F*
35	2.60	6.35	9.52	1.27
40	3.33	7.92	12.70	1.52
50	5.08	10.31	15.88	2.03
60	5.08	11.91	19.05	2.39
80	6.63	15.88	25.40	3.18
100	8.21	19.84	31.75	3.96
120	9.81	23.01	38.10	4.78
140	11.38	28.58	44.45	5.56
160	13.11	31.75	50.80	6.35
200	16.29	42.88	63.50	7.92

Copyright ASME International
Provided by IHS under license with ASME
No reproduction or networking permitted without license from IHS
Not for Resale

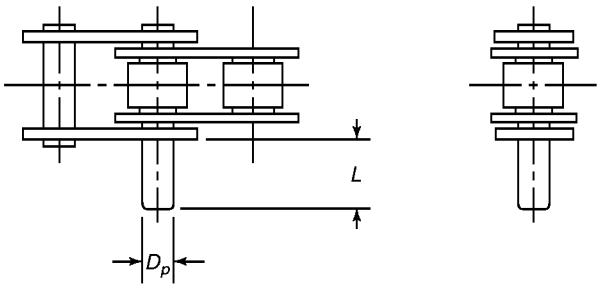

Extended Pin on One Side of Chain

Table 6 Extended Pin Dimensions

Standard Chain No.	Customary Units D_p, Nominal, in.	Customary Units L, in.	Metric Units D_p, Nominal, mm	Metric Units L, mm
35	0.141	0.375	3.58	9.52
40	0.156	0.375	3.96	9.52
50	0.200	0.469	5.08	11.91
60	0.234	0.562	5.94	14.27
80	0.312	0.750	7.92	19.05
100	0.375	0.938	9.52	23.83
120	0.437	1.125	11.10	28.58
140	0.500	1.312	12.70	33.32
160	0.562	1.500	14.27	38.10
200	0.781	1.875	19.84	47.62

generated sprocket tooth form comes very close to the theoretical form for all numbers of teeth, but actually matches only where and if the cutting tool design is based on a specific whole number of teeth. Cast, powder metal, or plastic molded teeth may or may not match the theoretical form, depending on how their pattern, die, or mold was designed and formed. All of these forms have proved to be acceptable in service. The important thing is that the seating curve diameter, bottom diameter, flange width, and chordal pitch be such as to accept the meshing chain without wedging or binding, so as to minimize chain loading and impact. (For additional information on cutting tools, see Nonmandatory Appendix A.)

3.6 Seating Curve Dimensions and Tolerances

See Tables 10A and 10B.

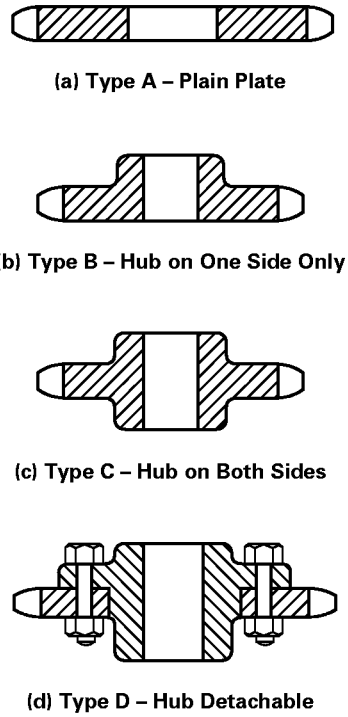

(a) Type A – Plain Plate

(b) Type B – Hub on One Side Only

(c) Type C – Hub on Both Sides

(d) Type D – Hub Detachable

Fig. 4 Types of Sprockets

3.7 Sprocket Diameters, Measuring Dimensions, and Tolerances

See Fig. 7 and Tables 11A, 11B, 11C, and 11D.

3.8 Pitch Diameter, Outside Diameter, and Measuring Dimension Factor for Chain of Unity Pitch

See Tables 12, 13A, and 13B. For chain pitches other than those shown in Table 12, use the following formulas.

(a) Pitch diameter equals pitch diameter from Table 12 × chain pitch.

(b) Outside diameter equals outside diameter from Table 12 × chain pitch.

(c) Caliper diameter factor equals $PD \cos (90 \text{ deg}/N)$.

(d) Caliper diameter (odd teeth) equals (caliper diameter factor from Table 12 × chain pitch) minus roller diameter.

(e) Caliper diameter (even teeth) equals pitch diameter minus roller diameter.

Copyright ASME International
Provided by IHS under license with ASME
No reproduction or networking permitted without license from IHS

Not for Resale

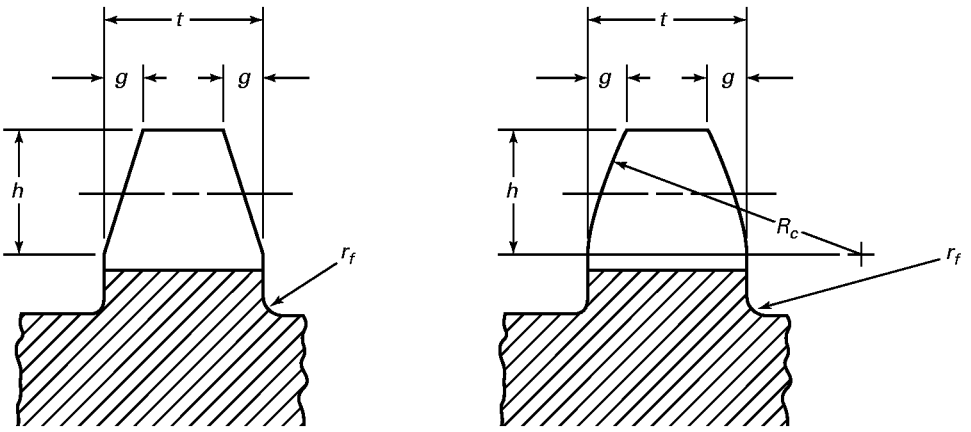

Section A **Section B**

g = approximately $\frac{1}{8}P$ (but not to exceed $W/3$)
h = depth of chamfer = approximately $0.5P$
R_c = chamfer radius
= $1.063P$ (approximately tangent to side)
r_f max. = fillet radius
= $0.04P$ for maximum hub diameter
t = thickness

Table 7A Sprocket Tooth Section Profile Dimensions of Commercial and Precision Sprockets, in.

Standard Chain No.	Chain Pitch P	Depth of Chamfer h	Width of Chamfer g	Radius R_c	Transverse Pitch K	
					Standard Series	Heavy Series
25	0.250	0.125	0.031	0.265	0.252	...
35	0.375	0.188	0.047	0.398	0.399	...
41	0.500	0.250	0.062	0.531	...	...
40	0.500	0.250	0.062	0.531	0.566	...
50	0.625	0.312	0.078	0.664	0.713	...
60	0.750	0.375	0.094	0.796	0.897	1.028
80	1.000	0.500	0.125	1.062	1.153	1.283
100	1.250	0.625	0.156	1.327	1.408	1.539
120	1.500	0.750	0.188	1.593	1.789	1.924
140	1.750	0.875	0.219	1.858	1.924	2.055
160	2.000	1.000	0.250	2.124	2.305	2.437
180	2.250	1.125	0.281	2.392	2.592	2.723
200	2.500	1.250	0.312	2.654	2.817	3.083
240	3.000	1.500	0.375	3.187	3.458	3.985

GENERAL NOTE: The sprocket chamfer dimensions R_c, g, and h are noncritical and are given only as a guide for general design proportions.

Copyright ASME International
Provided by IHS under license with ASME
No reproduction or networking permitted without license from IHS
Not for Resale

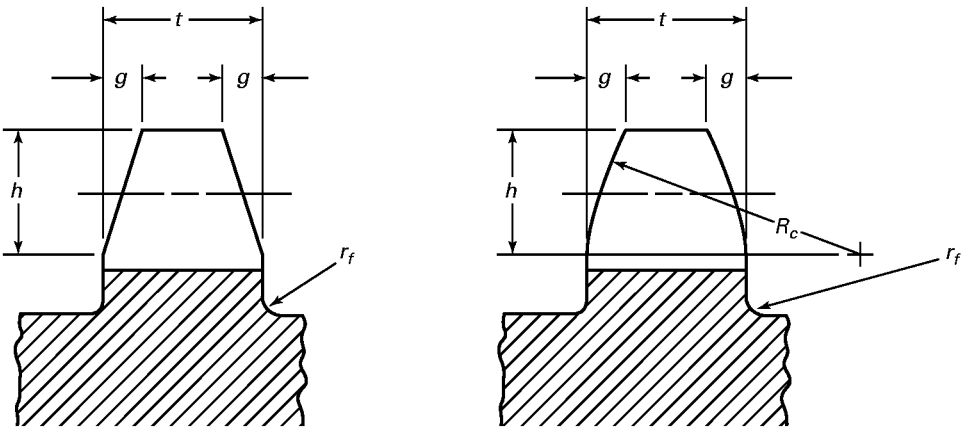

Section A **Section B**

g = approximately $\frac{1}{8}P$ (but not to exceed $W/3$)
h = depth of chamfer = approximately $0.5P$
R_c = chamfer radius
= $1.063P$ (approximately tangent to side)
r_f max. = fillet radius
= $0.04P$ for maximum hub diameter
t = thickness

Table 7B Sprocket Tooth Section Profile Dimensions of Commercial and Precision Sprockets, mm

Standard Chain No.	Chain Pitch P	Depth of Chamfer h	Width of Chamfer g	Radius R_c	Transverse Pitch K	
					Standard Series	Heavy Series
25	6.35	3.18	0.787	6.73	6.40	...
35	9.52	4.78	1.19	10.11	10.13	...
41	12.70	6.35	1.57	13.49	...	...
40	12.70	6.35	1.57	13.49	14.38	...
50	15.88	7.92	1.98	16.87	18.11	...
60	19.05	9.52	2.39	20.22	22.78	26.11
80	25.40	12.70	3.18	26.97	29.29	32.59
100	31.75	15.88	3.96	33.71	35.76	39.09
120	38.10	19.05	4.78	40.46	45.44	48.87
140	44.45	22.22	5.56	47.19	48.87	52.20
160	50.80	25.40	6.35	53.95	58.55	61.90
180	57.15	28.58	7.14	60.76	65.84	69.16
200	63.50	31.75	7.92	67.41	71.55	78.31
240	76.20	38.10	9.52	80.95	87.83	101.22

GENERAL NOTE: The sprocket chamfer dimensions R_c, g, and h are noncritical and are given only as a guide for general design proportions.

Copyright ASME International
Provided by IHS under license with ASME
No reproduction or networking permitted without license from IHS Not for Resale

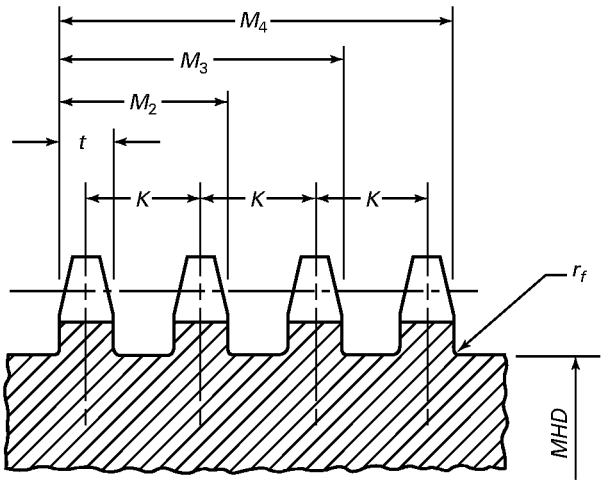

K = transverse pitch for multiple strand chain
= $W + 4.22(LPT)$
LPT = nominal thickness of link plates
M_2, M_3, M_4, *etc.* = K(strand multiple − 1) + t
MHD = maximum hub and groove diameter
P = chain pitch
r_f max. = fillet radius = $0.04P$ for maximum hub diameter
t_1 = maximum thickness for single strand chain, in.
= $0.93W - 0.006$
t_2 = maximum thickness for double and triple strand chain, in.
= $0.90W - 0.006$
t_4 = maximum thickness for quadruple strand chain and over, in.
= $0.86W - 0.012$
W = nominal chain width (see Table 9A or 9B)

Tolerance on t and M_2, M_3, M_4, etc.:

Commercial sprockets
t = plus zero, minus AISI weight tolerance for hot rolled plate converted to linear measure. See Table 9A (in.) or 9B (mm).
M = plus or minus $(0.01W + 0.006)$, in.

Precision sprockets
t, M = plus zero, minus $(0.01W + 0.006)$, in.

Maximum variation in thickness of any individual flange:
Commercial = total tolerance
Precision = one-half total tolerance

Fig. 5 Sprocket Flange Location and Thickness

Copyright ASME International
Provided by IHS under license with ASME
No reproduction or networking permitted without license from IHS
Not for Resale

Table 8A Maximum Eccentricity and Face Runout Tolerances for Commercial Sprockets (Measured as Total Indicator Reading), in.

Sprocket Bottom Diameter *BD*	Maximum Eccentricity	Maximum Face Runout
0 – 7.000	0.010 + 0.001(*BD*)	0.020
7.001 – 20.000	0.010 + 0.001(*BD*)	0.003(*BD*)
20.001 – 30.000	0.030	0.003(*BD*)
30.001 and over	0.030	0.090

Table 8B Maximum Eccentricity and Face Runout Tolerances for Commercial Sprockets (Measured as Total Indicator Reading), mm

Sprocket Bottom Diameter *BD*	Maximum Eccentricity	Maximum Face Runout
0 – 177.80	0.25 + 0.001(*BD*)	0.51
177.81 – 508.00	0.25 + 0.001(*BD*)	0.003(*BD*)
508.01 – 762.00	0.76	0.003(*BD*)
762.01 and over	0.76	2.29

Table 8C Maximum Eccentricity and Face Runout Tolerances for Precision Sprockets (Measured as Total Indicator Reading), in.

Sprocket Bottom Diameter *BD*	Maximum Eccentricity	Maximum Face Runout
0 – 4.000	0.006	0.010
4.001 – 6.000	0.008	0.010
6.001 – 10.000	0.010	0.010
10.001 – 26.000	0.001(*BD*)	0.001(*BD*)
26.001 – 40.000	0.026	0.001(*BD*)
40.001 and over	0.026	0.040

Table 8D Maximum Eccentricity and Face Runout Tolerances for Precision Sprockets (Measured as Total Indicator Reading), mm

Sprocket Bottom Diameter *BD*	Maximum Eccentricity	Maximum Face Runout
0 – 101.60	0.15	0.25
101.61 – 152.40	0.20	0.25
152.41 – 254.00	0.25	0.25
254.01 – 660.40	0.001(*BD*)	0.001(*BD*)
660.41 – 1016.00	0.66	0.001(*BD*)
1016.01 and over	0.66	1.02

Copyright ASME International
Provided by IHS under license with ASME
No reproduction or networking permitted without license from IHS

Not for Resale

Table 9A Sprocket Flange Thickness, in.

Standard Chain No.	Width of Chain *W*	Maximum Sprocket Flange Thickness *t*			Minus Tolerance on *t*		Tolerance on *M*		Max. Variation of *t* on Each Flange	
		Single	Double and Triple	Quad. and Over	Commercial	Precision	Commercial, Plus or Minus	Precision, Minus Only	Commercial	Precision
25	0.125	0.110	0.106	0.096	0.021	0.007	0.007	0.007	0.021	0.004
35	0.188	0.169	0.163	0.150	0.027	0.008	0.008	0.008	0.027	0.004
41	0.250	0.226	. . .	. . .	0.032	0.009	. . .	. . .	0.032	0.004
40	0.312	0.284	0.275	0.256	0.035	0.009	0.009	0.009	0.035	0.004
50	0.375	0.343	0.332	0.310	0.036	0.010	0.010	0.010	0.036	0.005
60	0.500	0.459	0.444	0.418	0.036	0.011	0.011	0.011	0.036	0.006
80	0.625	0.575	0.556	0.526	0.040	0.012	0.012	0.012	0.040	0.006
100	0.750	0.692	0.669	0.633	0.046	0.014	0.014	0.014	0.046	0.007
120	1.000	0.924	0.894	0.848	0.057	0.016	0.016	0.016	0.057	0.008
140	1.000	0.924	0.894	0.848	0.057	0.016	0.016	0.016	0.057	0.008
160	1.250	1.156	1.119	1.063	0.062	0.018	0.018	0.018	0.062	0.009
180	1.406	1.302	1.259	1.198	0.068	0.020	0.020	0.020	0.068	0.010
200	1.500	1.389	1.344	1.278	0.072	0.021	0.021	0.021	0.072	0.010
240	1.875	1.738	1.682	1.602	0.087	0.025	0.025	0.025	0.087	0.012

Table 9B Sprocket Flange Thickness, mm

Standard Chain No.	Width of Chain *W*	Maximum Sprocket Flange Thickness *t*			Minus Tolerance on *t*		Tolerance on *M*		Max. Variation of *t* on Each Flange	
		Single	Double and Triple	Quad. and Over	Commercial	Precision	Commercial, Plus or Minus	Precision, Minus Only	Commercial	Precision
25	3.18	2.79	2.69	2.44	0.53	0.18	0.18	0.18	0.53	0.10
35	4.78	4.29	4.14	3.81	0.69	0.20	0.20	0.20	0.69	0.10
41	6.35	5.74	. . .	. . .	0.81	0.23	. . .	. . .	0.81	0.10
40	7.92	7.21	6.98	6.50	0.89	0.23	0.23	0.23	0.89	0.10
50	9.52	8.71	8.43	7.87	0.91	0.25	0.25	0.25	0.91	0.13
60	12.70	11.66	11.28	10.62	0.91	0.28	0.28	0.28	0.91	0.15
80	15.88	14.60	14.12	13.36	1.02	0.30	0.30	0.30	1.02	0.15
100	19.05	17.58	16.99	16.08	1.17	0.36	0.36	0.36	1.17	0.18
120	25.40	23.47	22.71	21.54	1.45	0.41	0.41	0.41	1.45	0.20
140	25.40	23.47	22.71	21.54	1.45	0.41	0.41	0.41	1.45	0.20
160	31.75	29.36	28.42	27.00	1.57	0.46	0.46	0.46	1.57	0.23
180	35.71	33.07	31.98	30.43	1.73	0.51	0.51	0.51	1.73	0.25
200	38.10	35.28	34.14	32.46	1.83	0.53	0.53	0.53	1.83	0.25
240	47.62	44.15	42.72	40.69	2.21	0.64	0.64	0.64	2.21	0.30

Copyright ASME International
Provided by IHS under license with ASME
No reproduction or networking permitted without license from IHS

Not for Resale

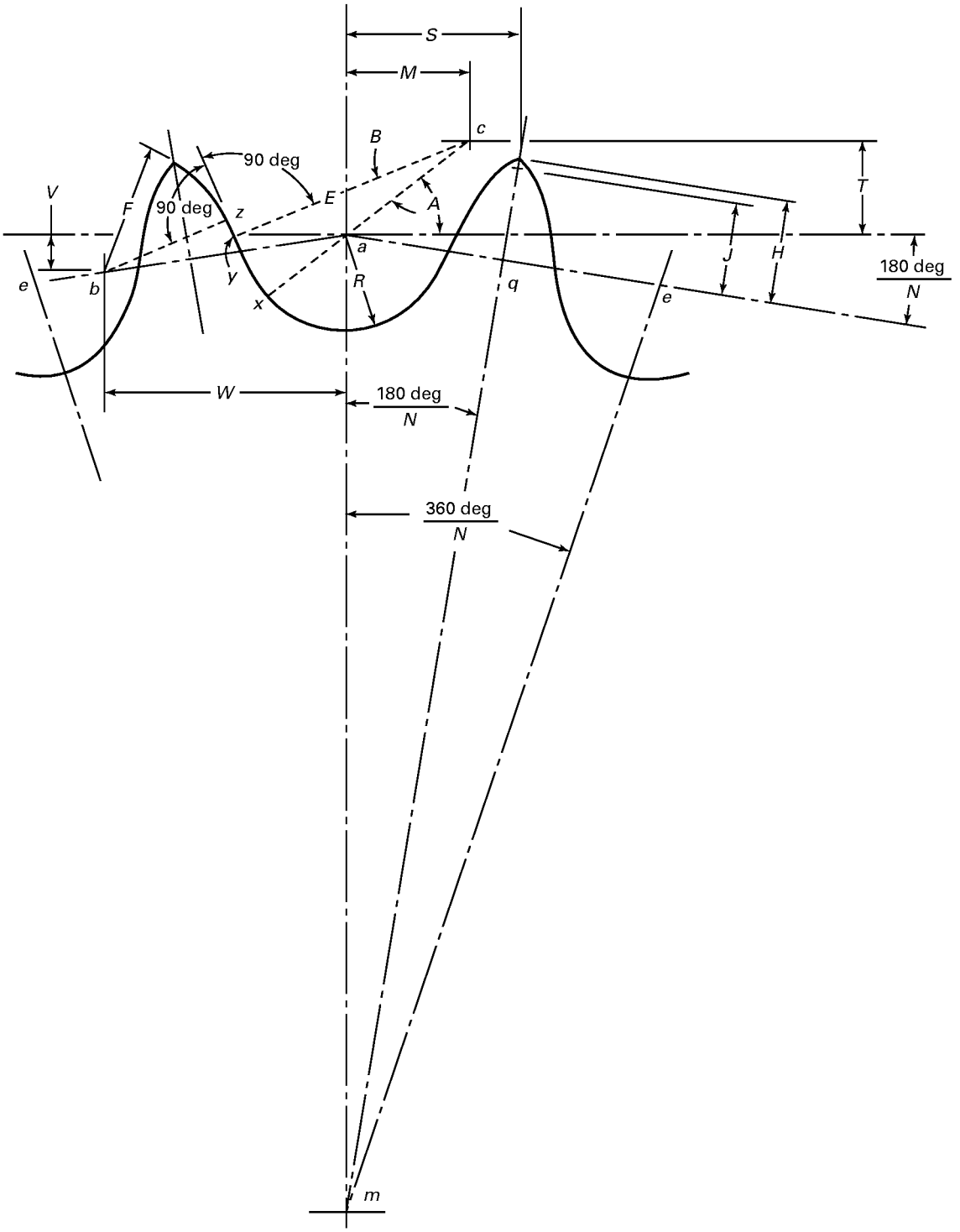

Fig. 6 Theoretical Tooth Form

Copyright ASME International
Provided by IHS under license with ASME
No reproduction or networking permitted without license from IHS

Not for Resale

D_r = roller diameter

D_s = seating curve diameter
$= 1.005D_r + 0.003$, in.

N = number of teeth

P = chain pitch (ae)

$$R = \frac{D_s}{2} = 0.5025D_r + 0.0015, \text{ in.}$$

$$A = 35 \text{ deg} + \frac{60 \text{ deg}}{N}$$

$$B = 18 \text{ deg} - \frac{56 \text{ deg}}{N}$$

$$ac = 0.8D_r$$

$$M = 0.8D_r \cos\left(35 \text{ deg} + \frac{60 \text{ deg}}{N}\right)$$

$$T = 0.8D_r \sin\left(35 \text{ deg} + \frac{60 \text{ deg}}{N}\right)$$

$$E = 1.3025D_r + 0.0015, \text{ in.}$$

Chordal length of arc xy

$$= (2.605D_r + 0.003) \sin\left(9 \text{ deg} - \frac{28 \text{ deg}}{N}\right), \text{ in.}$$

Chord yz

$$= D_r\left[1.4 \sin\left(17 \text{ deg} - \frac{64 \text{ deg}}{N}\right) - 0.8 \sin\left(18 \text{ deg} - \frac{56 \text{ deg}}{N}\right)\right]$$

$$ab = 1.4D_r$$

$$W = 1.4D_r \cos\frac{180 \text{ deg}}{N}$$

$$V = 1.4D_r \sin\frac{180 \text{ deg}}{N}$$

$$F = D_r\left[0.8 \cos\left(18 \text{ deg} - \frac{56 \text{ deg}}{N}\right) + 1.4 \cos\left(17 \text{ deg} - \frac{64 \text{ deg}}{N}\right) - 1.3025\right] - 0.0015, \text{ in.}$$

$$H = \sqrt{F^2 - \left(1.4D_r - \frac{P}{2}\right)^2}$$

$$S = \frac{P}{2} \cos\frac{180 \text{ deg}}{N} + H \sin\frac{180 \text{ deg}}{N}$$

Approximate outside diameter of sprocket when J is $0.3P$

$$= P\left(0.6 + \cot\frac{180 \text{ deg}}{N}\right)$$

Outside diameter of sprocket when tooth is pointed

$$= P \cot\frac{180 \text{ deg}}{N} + \cos\frac{180 \text{ deg}}{N}(D_s - D_r) + 2H$$

The pressure angle for a new chain is Xab

$$= 35 \text{ deg} - \frac{120 \text{ deg}}{N}$$

The minimum pressure angle is $Xab - B$

$$= 17 \text{ deg} - \frac{64 \text{ deg}}{N}$$

The average pressure angle

$$= 26 \text{ deg} - \frac{92 \text{ deg}}{N}$$

Ht = circular addendum $= J - (ma - mq)$

$$= P\left(0.3 - \frac{\tan\frac{90 \text{ deg}}{N_a}}{2}\right)$$

N_a = intermediate number of teeth for topping hob range

WD = whole depth of topping hob cut

$$= \frac{D_r}{2} + Ht = \frac{D_r}{2} + P\left(0.3 - \frac{\tan\frac{90 \text{ deg}}{N_a}}{2}\right)$$

Fig. 6 Theoretical Tooth Form (Cont'd)

Copyright ASME International
Provided by IHS under license with ASME
No reproduction or networking permitted without license from IHS

Not for Resale

Table 10A Seating Curve Dimensions and Tolerances, in.

Chain Pitch P	Roller Diameter D_r	Minimum Seating Curve Radius R	Minimum Seating Curve Diam. D_s	Plus Tolerance on D_s [Note (1)]
0.250	0.130	0.0670	0.134	0.0055
0.375	0.200	0.1020	0.204	0.0055
0.500	0.306, 0.312	0.1585	0.317	0.0060
0.625	0.400	0.2025	0.405	0.0060
0.750	0.469	0.2370	0.474	0.0065
1.000	0.625	0.3155	0.631	0.0070
1.250	0.750	0.3785	0.757	0.0070
1.500	0.875	0.4410	0.882	0.0075
1.750	1.000	0.5040	1.008	0.0080
2.000	1.125	0.5670	1.134	0.0085
2.250	1.406	0.7080	1.416	0.0090
2.500	1.562	0.7870	1.573	0.0095
3.000	1.875	0.9435	1.887	0.0105

NOTE:
(1) Plus only; no minus tolerance.

Table 10B Seating Curve Dimensions and Tolerances, mm

Chain Pitch P	Roller Diameter D_r	Minimum Seating Curve Radius R	Minimum Seating Curve Diam. D_s	Plus Tolerance on D_s [Note (1)]
6.35	3.30	1.70	3.40	0.14
9.52	5.08	2.59	5.18	0.14
12.70	7.77, 7.92	4.03	8.05	0.15
15.88	10.16	5.14	10.29	0.15
19.05	11.91	6.02	12.04	0.17
25.40	15.88	8.01	16.03	0.18
31.75	19.05	9.61	19.23	0.18
38.10	22.22	11.20	22.40	0.19
44.45	25.40	12.80	25.60	0.20
50.80	28.58	14.40	28.80	0.22
57.15	35.71	17.98	35.97	0.23
63.50	39.67	19.99	39.95	0.24
76.20	47.62	23.96	47.93	0.27

NOTE:
(1) Plus only; no minus tolerance.

Copyright ASME International
Provided by IHS under license with ASME
No reproduction or networking permitted without license from IHS
Not for Resale

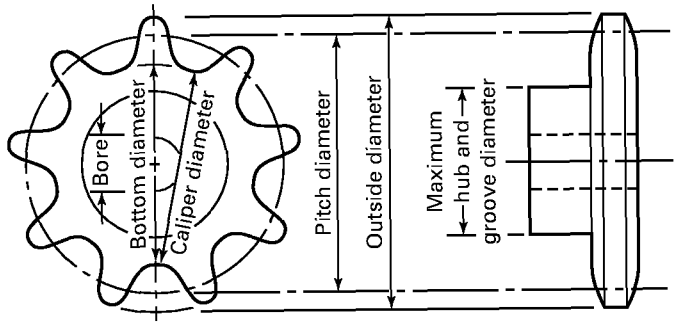

D_r = roller diameter

N = number of teeth

P = chain pitch

PD = pitch diameter

Pitch diameter of sprocket

$$= \frac{P}{\sin \frac{180 \text{ deg}}{N}}$$

Bottom diameter of sprocket

$$= PD - D_r$$

Caliper diameter for even number of teeth
= bottom diameter

Caliper diameter for odd number of teeth

$$= PD\left(\cos \frac{90 \text{ deg}}{N}\right) - D_r$$

Tolerances on caliper diameter of sprockets:

Plus tolerance = 0.000

Minus tolerances

Commercial = $0.002P\sqrt{N} + 0.006$, in.

Precision = $0.001P\sqrt{N} + 0.003$, in.

Approximate outside diameter of turned sprocket

$$= P\left(0.6 + \cot \frac{180 \text{ deg}}{N}\right)$$

Outside diameter of topping hob cut sprocket

$$= PD - D_r + 2WD$$

Maximum hub and groove diameter (MHD) of sprockets

$$= P\left(\cot \frac{180 \text{ deg}}{N} - 1\right) - 0.030, \text{ in.}$$

Fig. 7 Sprocket Diameters

Copyright ASME International
Provided by IHS under license with ASME
No reproduction or networking permitted without license from IHS
Not for Resale

Table 11A Minus Tolerances on the Caliper Diameters of Commercial Sprockets for Various Numbers of Teeth, in.

Chain Pitch	Number of Teeth									
P	Up to 15	16–24	25–35	36–48	49–63	64–80	81–99	100–120	121–143	144 and Over
0.250	0.008	0.008	0.008	0.010	0.010	0.010	0.010	0.012	0.012	0.012
0.375	0.008	0.008	0.008	0.010	0.010	0.012	0.012	0.012	0.014	0.014
0.500	0.008	0.010	0.011	0.012	0.013	0.014	0.015	0.016	0.017	0.018
0.625	0.010	0.011	0.012	0.014	0.016	0.018	0.018	0.018	0.020	0.022
0.750	0.010	0.012	0.014	0.016	0.018	0.020	0.020	0.022	0.024	0.026
1.000	0.012	0.014	0.016	0.018	0.020	0.022	0.024	0.026	0.028	0.030
1.250	0.014	0.016	0.018	0.020	0.024	0.026	0.028	0.032	0.034	0.036
1.500	0.014	0.018	0.021	0.024	0.026	0.030	0.032	0.036	0.038	0.042
1.750	0.016	0.020	0.024	0.026	0.030	0.034	0.038	0.040	0.044	0.048
2.000	0.018	0.022	0.026	0.030	0.034	0.038	0.042	0.046	0.050	0.054
2.250	0.020	0.024	0.028	0.032	0.036	0.042	0.046	0.050	0.056	0.060
2.500	0.020	0.026	0.030	0.036	0.040	0.046	0.050	0.056	0.060	0.066
3.000	0.024	0.030	0.036	0.042	0.048	0.054	0.060	0.066	0.072	0.078

GENERAL NOTE: No plus tolerances.

Table 11B Minus Tolerances on the Caliper Diameters of Commercial Sprockets for Various Numbers of Teeth, mm

Chain Pitch	Number of Teeth									
P	Up to 15	16–24	25–35	36–48	49–63	64–80	81–99	100–120	121–143	144 and Over
6.35	0.20	0.20	0.20	0.25	0.25	0.25	0.25	0.30	0.30	0.30
9.52	0.20	0.20	0.20	0.25	0.25	0.30	0.30	0.30	0.36	0.36
12.70	0.20	0.25	0.28	0.30	0.33	0.36	0.38	0.41	0.43	0.46
15.88	0.25	0.28	0.30	0.36	0.41	0.46	0.46	0.46	0.51	0.56
19.05	0.25	0.30	0.36	0.41	0.46	0.51	0.51	0.56	0.61	0.66
25.40	0.30	0.36	0.41	0.46	0.51	0.56	0.61	0.66	0.71	0.76
31.75	0.36	0.41	0.46	0.51	0.61	0.66	0.71	0.81	0.86	0.91
38.10	0.36	0.46	0.53	0.61	0.66	0.76	0.81	0.91	0.97	1.07
44.45	0.41	0.51	0.61	0.66	0.76	0.86	0.97	1.02	1.12	1.22
50.80	0.46	0.56	0.66	0.76	0.86	0.97	1.07	1.17	1.27	1.37
57.15	0.51	0.61	0.71	0.81	0.91	1.07	1.17	1.27	1.42	1.52
63.50	0.51	0.66	0.76	0.91	1.02	1.17	1.27	1.42	1.52	1.68
76.20	0.61	0.76	0.91	1.07	1.22	1.37	1.52	1.68	1.83	1.98

GENERAL NOTE: No plus tolerances.

Copyright ASME International
Provided by IHS under license with ASME
No reproduction or networking permitted without license from IHS

Not for Resale

Table 11C Minus Tolerances on the Caliper Diameters of Precision Sprockets for Various Numbers of Teeth, in.

Chain Pitch	Number of Teeth									
P	Up to 15	16–24	25–35	36–48	49–63	64–80	81–99	100–120	121–143	144 and Over
0.250	0.004	0.004	0.004	0.005	0.005	0.005	0.005	0.006	0.006	0.006
0.375	0.004	0.004	0.004	0.005	0.005	0.006	0.006	0.006	0.007	0.007
0.500	0.004	0.005	0.0055	0.006	0.0065	0.007	0.0075	0.008	0.0085	0.009
0.625	0.005	0.0055	0.006	0.007	0.008	0.009	0.009	0.009	0.010	0.011
0.750	0.005	0.006	0.007	0.008	0.009	0.010	0.010	0.011	0.012	0.013
1.000	0.006	0.007	0.008	0.009	0.010	0.011	0.012	0.013	0.014	0.015
1.250	0.007	0.008	0.009	0.010	0.012	0.013	0.014	0.016	0.017	0.018
1.500	0.007	0.009	0.0105	0.012	0.013	0.015	0.016	0.018	0.019	0.021
1.750	0.008	0.010	0.012	0.013	0.015	0.017	0.019	0.020	0.022	0.024
2.000	0.009	0.011	0.013	0.015	0.017	0.019	0.021	0.023	0.025	0.027
2.250	0.010	0.012	0.014	0.016	0.018	0.021	0.023	0.025	0.028	0.030
2.500	0.010	0.013	0.015	0.018	0.020	0.023	0.025	0.028	0.030	0.033
3.000	0.012	0.015	0.018	0.021	0.024	0.027	0.030	0.033	0.036	0.039

GENERAL NOTE: No plus tolerances.

Table 11D Minus Tolerances on the Caliper Diameters of Precision Sprockets for Various Numbers of Teeth, mm

Chain Pitch	Number of Teeth									
P	Up to 15	16–24	25–35	36–48	49–63	64–80	81–99	100–120	121–143	144 and Over
6.35	0.10	0.10	0.10	0.13	0.13	0.13	0.13	0.15	0.15	0.15
9.52	0.10	0.10	0.10	0.13	0.13	0.15	0.15	0.15	0.18	0.18
12.70	0.10	0.13	0.14	0.15	0.17	0.18	0.19	0.20	0.22	0.23
15.88	0.13	0.14	0.15	0.18	0.20	0.23	0.23	0.23	0.25	0.28
19.05	0.13	0.15	0.18	0.20	0.23	0.25	0.25	0.28	0.30	0.33
25.40	0.15	0.18	0.20	0.23	0.25	0.28	0.30	0.33	0.36	0.38
31.75	0.18	0.20	0.23	0.25	0.30	0.33	0.36	0.41	0.43	0.46
38.10	0.18	0.23	0.27	0.30	0.33	0.38	0.41	0.46	0.48	0.53
44.45	0.20	0.25	0.30	0.33	0.38	0.43	0.48	0.51	0.56	0.61
50.80	0.23	0.28	0.33	0.38	0.43	0.48	0.53	0.58	0.64	0.69
57.15	0.25	0.30	0.36	0.41	0.46	0.53	0.58	0.64	0.71	0.76
63.50	0.25	0.33	0.38	0.46	0.51	0.58	0.64	0.71	0.76	0.84
76.20	0.30	0.38	0.46	0.53	0.61	0.69	0.76	0.84	0.91	0.99

GENERAL NOTE: No plus tolerances.

Copyright ASME International
Provided by IHS under license with ASME
No reproduction or networking permitted without license from IHS

Not for Resale

Table 12 Pitch Diameter, Outside Diameter, and Measuring Dimension Factor for Chain of Unity Pitch

Number of Teeth	Pitch Diameter	Turned Outside Diameter	Topping Hob Cut Outside Diameter	Caliper Diameter Factor	Number of Teeth	Pitch Diameter	Turned Outside Diameter	Topping Hob Cut Outside Diameter	Caliper Diameter Factor
5	1.7013	1.976	1.976	1.6180	49	15.6079	16.176	16.180	15.5999
6	2.0000	2.332	2.332	. . .	50	15.9260	16.495	16.498	. . .
7	2.3048	2.676	2.691	2.2470	51	16.2441	16.813	16.816	16.2364
8	2.6131	3.014	3.000	. . .	52	16.5622	17.132	17.134	. . .
9	2.9238	3.348	3.364	2.8794	53	16.8803	17.451	17.452	16.8729
10	3.2361	3.678	3.676	. . .	54	17.1984	17.769	17.770	. . .
11	3.5495	4.006	3.990	3.5133	55	17.5165	18.088	18.089	17.5094
12	3.8637	4.332	4.352	. . .	56	17.8347	18.407	18.407	. . .
13	4.1786	4.657	4.666	4.1481	57	18.1528	18.725	18.725	18.1459
14	4.4940	4.981	4.982	. . .	58	18.4710	19.044	19.043	. . .
15	4.8097	5.304	5.298	4.7834	59	18.7892	19.363	19.361	18.7825
16	5.1258	5.627	5.614	. . .	60	19.1073	19.681	19.680	. . .
17	5.4422	5.949	5.930	5.4190	61	19.4255	20.000	19.998	19.4190
18	5.7588	6.271	6.292	. . .	62	19.7437	20.318	20.316	. . .
19	6.0755	6.593	6.609	6.0548	63	20.0618	20.637	20.634	20.0556
20	6.3924	6.914	6.926	. . .	64	20.3800	20.956	20.952	. . .
21	6.7095	7.235	7.243	6.6907	65	20.6982	21.274	21.270	20.6921
22	7.0267	7.555	7.560	. . .	66	21.0164	21.593	21.588	. . .
23	7.3439	7.876	7.877	7.3268	67	21.3346	21.911	21.907	21.3287
24	7.6613	8.196	8.195	. . .	68	21.6528	22.230	22.225	. . .
25	7.9787	8.516	8.512	7.9630	69	21.9710	22.548	22.543	21.9653
26	8.2962	8.836	8.829	. . .	70	22.2892	22.867	22.861	. . .
27	8.6138	9.156	9.147	8.5992	71	22.6074	23.185	23.179	22.6018
28	8.9314	9.475	9.465	. . .	72	22.9256	23.504	23.498	. . .
29	9.2491	9.795	9.782	9.2355	73	23.2438	23.822	23.816	23.2384
30	9.5668	10.114	10.100	. . .	74	23.5620	24.141	24.134	. . .
31	9.8845	10.434	10.418	9.8718	75	23.8802	24.459	24.452	23.8750
32	10.2023	10.753	10.736	. . .	76	24.1984	24.778	24.770	. . .
33	10.5201	11.073	11.053	10.5082	77	24.5166	25.096	25.089	24.5116
34	10.8379	11.392	11.371	. . .	78	24.8349	25.415	25.407	. . .
35	11.1558	11.711	11.728	11.1446	79	25.1531	25.733	25.725	25.1481
36	11.4737	12.030	12.046	. . .	80	25.4713	26.052	26.043	. . .
37	11.7916	12.349	12.364	11.7810	81	25.7896	26.370	26.362	25.7847
38	12.1095	12.668	12.682	. . .	82	26.1078	26.689	26.680	. . .
39	12.4275	12.987	13.000	12.4174	83	26.4260	27.007	26.998	26.4213
40	12.7455	13.306	13.318	. . .	84	26.7443	27.326	27.316	. . .
41	13.0635	13.625	13.636	13.0539	85	27.0625	27.644	27.635	27.0579
42	13.3815	13.944	13.954	. . .	86	27.3807	27.962	27.953	. . .
43	13.6995	14.263	14.272	13.6904	87	27.6990	28.281	28.271	27.6945
44	14.0175	14.582	14.590	. . .	88	28.0172	28.599	28.589	. . .
45	14.3355	14.901	14.908	14.3269	89	28.3354	28.918	28.907	28.3310
46	14.6536	15.219	15.226	. . .	90	28.6537	29.236	29.226	. . .
47	14.9717	15.538	15.544	14.9634	91	28.9719	29.555	29.544	28.9676
48	15.2898	15.857	15.862	. . .	92	29.2902	29.873	29.862	. . .

Copyright ASME International
Provided by IHS under license with ASME
No reproduction or networking permitted without license from IHS

Not for Resale

TABLE 12 Pitch Diameter, Outside Diameter, and Measuring Dimension Factor for Chain of Unity Pitch (Cont'd)

Number of Teeth	Pitch Diameter	Turned Outside Diameter	Topping Hob Cut Outside Diameter	Caliper Diameter Factor	Number of Teeth	Pitch Diameter	Turned Outside Diameter	Topping Hob Cut Outside Diameter	Caliper Diameter Factor
93	29.6081	30.192	30.180	29.6042	137	43.6123	44.201	44.184	43.6094
94	29.9267	30.510	30.499	...	138	43.9306	44.519	44.503	...
95	30.2449	30.828	30.817	30.2408	139	44.2488	44.838	44.821	44.2460
96	30.5632	31.147	31.135	...	140	44.5671	45.156	45.139	...
97	30.8815	31.465	31.454	30.8774	141	44.8854	45.474	45.457	44.8826
98	31.1997	31.784	31.772	...	142	45.2037	45.793	45.776	...
99	31.5180	32.102	32.090	31.5140	143	45.5220	46.111	46.094	45.5192
100	31.8362	32.421	32.408	...	144	45.8402	46.429	46.412	...
101	32.1545	32.739	32.727	32.1506	145	46.1585	46.748	46.731	46.1558
102	32.4727	33.057	33.045	...	146	46.4768	47.066	47.049	...
103	32.7910	33.376	33.363	32.7872	147	46.7951	47.384	47.367	46.7924
104	33.1093	33.694	33.681	...	148	47.1134	47.703	47.685	...
105	33.4275	34.013	34.000	33.4238	149	47.4317	48.021	48.004	47.4290
106	33.7458	34.331	34.318	...	150	47.7500	48.340	48.322	...
107	34.0641	34.649	34.636	34.0604	151	48.0683	48.658	48.640	48.0657
108	34.3823	34.968	34.954	...	152	48.3865	48.976	48.959	...
109	34.7006	35.286	35.273	34.6970	153	48.7048	49.295	49.277	48.7023
110	35.0188	35.605	35.591	...	154	49.0231	49.613	49.595	...
111	35.3371	35.923	35.909	35.3336	155	49.3414	49.931	49.913	49.3389
112	35.6554	36.241	36.227	...	156	49.6597	50.250	50.232	...
113	35.9736	36.560	36.546	35.9702	157	49.9780	50.568	50.550	49.9755
114	36.2919	36.878	36.864		158	50.2963	50.886	50.868	...
115	36.6102	37.197	37.182	36.6068	159	50.6146	51.205	51.187	50.6121
116	36.9285	37.515	37.501	...	160	50.9329	51.523	51.505	...
117	37.2467	37.833	37.819	37.2434	161	51.2511	51.841	51.823	51.2487
118	37.5650	38.152	38.137	...	162	51.5694	52.160	52.141	...
119	37.8833	38.470	38.455	37.8800	163	51.8877	52.478	52.460	51.8853
120	38.2015	38.788	38.774	...	164	52.2060	52.796	52.778	...
121	38.5198	39.107	39.092	38.5166	165	52.5243	53.115	53.096	52.5219
122	38.8381	39.425	39.410	...	166	52.8426	53.433	53.415	...
123	39.1564	39.744	39.728	39.1532	167	53.1609	53.752	53.733	53.1585
124	39.4746	40.062	40.047	...	168	53.4792	54.070	54.051	...
125	39.7929	40.380	40.365	39.7898	169	53.7975	54.388	54.370	53.7951
126	40.1112	40.699	40.683	...	170	54.1157	54.707	54.688	...
127	40.4295	41.017	41.002	40.4264	171	54.4340	55.025	55.006	54.4317
128	40.7477	41.335	41.320	...	172	54.7523	55.343	55.324	...
129	41.0660	41.654	41.638	41.0630	173	55.0706	55.662	55.643	55.0684
130	41.3843	41.972	41.956	...	174	55.3889	55.980	55.961	...
131	41.7026	42.291	42.275	41.6996	175	55.7072	56.298	56.279	55.7050
132	42.0209	42.609	42.593	...	176	56.0255	56.617	56.598	...
133	42.3392	42.927	42.911	42.3362	177	56.3438	56.935	56.916	56.3416
134	42.6574	43.246	43.229	...	178	56.6621	57.253	57.234	...
135	42.9757	43.564	43.548	42.9728	179	56.9804	57.572	57.552	56.9782
136	43.2940	43.882	43.866	...	180	57.2987	57.890	57.871	...

Copyright ASME International
Provided by IHS under license with ASME
No reproduction or networking permitted without license from IHS

Not for Resale

TABLE 12 Pitch Diameter, Outside Diameter, and Measuring Dimension Factor for Chain of Unity Pitch (Cont'd)

Number of Teeth	Pitch Diameter	Turned Outside Diameter	Topping Hob Cut Outside Diameter	Caliper Diameter Factor	Number of Teeth	Pitch Diameter	Turned Outside Diameter	Topping Hob Cut Outside Diameter	Caliper Diameter Factor
181	57.6170	58.208	58.189	57.6148	191	60.7999	61.392	61.372	60.7979
182	57.9353	58.527	58.507	. . .	192	61.1182	61.710	61.690	. . .
183	58.2536	58.845	58.826	58.2514					
184	58.5719	59.163	59.144	. . .	193	61.4365	62.028	62.009	61.4345
					194	61.7548	62.347	62.327	. . .
185	58.8901	59.482	59.462	58.8880	195	62.0731	62.665	62.645	62.0711
186	59.2084	59.800	59.780	. . .	196	62.3914	62.983	62.963	. . .
187	59.5267	60.118	60.099	59.5246					
188	59.8450	60.437	60.417	. . .	197	62.7097	63.302	63.282	62.7077
					198	63.0280	63.620	63.600	. . .
189	60.1633	60.755	60.735	60.1612	199	63.3463	63.938	63.918	63.3443
190	60.4816	61.073	61.054	. . .	200	63.6646	64.257	64.237	. . .

Copyright ASME International
Provided by IHS under license with ASME
No reproduction or networking permitted without license from IHS

Not for Resale

Copyright ASME International
Provided by IHS under license with ASME
No reproduction or networking permitted without license from IHS

Table 13A Whole Depth of Topping Hob Cut *WD* for Each Pitch and Range, in.

Teeth Range	Number of Teeth N_a	Chain Pitch *P*												
		0.250	0.375	0.500 [Note (1)]	0.625	0.750	1.00	1.25	1.50	1.75	2.00	2.25	2.50	3.00
5	5	0.0994	0.1516	0.2248	0.2860	0.3377	0.4500	0.5469	0.6438	0.7407	0.8376	1.0125	1.1253	1.3501
6	6	0.1065	0.1623	0.2390	0.3038	0.3590	0.4785	0.5825	0.6865	0.7905	0.8945	1.0766	1.1966	1.4356
7 – 8	7.47	0.1133	0.1725	0.2526	0.3208	0.3795	0.5058	0.6166	0.7274	0.8382	0.9491	1.1379	1.2647	1.5173
9 – 11	9.9	0.1200	0.1825	0.2660	0.3375	0.3995	0.5325	0.6500	0.7675	0.8850	1.0025	1.1980	1.3315	1.5975
12 – 17	14.07	0.1260	0.1915	0.2780	0.3525	0.4175	0.5564	0.6799	0.8034	0.9269	1.0504	1.2519	1.3914	1.6693
18 – 34	23.54	0.1316	0.2000	0.2890	0.3666	0.4344	0.5791	0.7082	0.8374	0.9665	1.0957	1.3028	1.4480	1.7373
35 and over	56	0.1365	0.2072	0.2990	0.3787	0.4490	0.5985	0.7325	0.8665	1.0004	1.1344	1.3464	1.4964	1.7954

NOTE:
(1) Roller diameter 0.312 in.

Not for Resale

Copyright ASME International
Provided by IHS under license with ASME
No reproduction or networking permitted without license from IHS

Table 13B Whole Depth of Topping Hob Cut *WD* for Each Pitch and Range, mm

Teeth Range	Number of Teeth N_a	Chain Pitch *P*												
		6.35	9.52	12.70 [Note (1)]	15.88	19.05	25.4	31.75	38.10	44.45	50.80	57.15	63.50	76.20
5	5	2.525	3.851	5.710	7.264	8.578	11.430	13.891	16.353	18.814	21.275	25.718	28.583	34.293
6	6	2.705	4.122	6.071	7.717	9.119	12.154	14.796	17.437	20.079	22.720	27.346	30.394	36.464
7 – 8	7.47	2.878	4.382	6.416	8.148	9.639	12.847	15.662	18.476	21.290	24.107	28.903	32.123	38.539
9 – 11	9.9	3.048	4.636	6.756	8.573	10.147	13.526	16.510	19.495	22.479	25.464	30.429	33.820	40.577
12 – 17	14.07	3.200	4.864	7.061	8.954	10.605	14.133	17.269	20.406	23.543	26.680	31.798	35.342	42.400
18 – 34	23.54	3.343	5.080	7.341	9.312	11.034	14.709	17.988	21.270	24.549	27.831	33.091	36.779	44.127
35 and over	56	3.467	5.263	7.595	9.619	11.405	15.202	18.606	22.009	25.410	28.814	34.199	38.009	45.603

NOTE:
(1) Roller diameter 7.925 mm.

Not for Resale

NONMANDATORY APPENDIX A
SUPPLEMENTARY INFORMATION[1]

A1 CHAIN SELECTION

A1.1 Design Factors

A1.1.1 General. The horsepower ratings in Tables A4 through A17 generally apply to lubricated single-pitch, single-strand roller chains, both American National standard and heavy series. For horsepower ratings of multiple strand chains, refer to Table A2. The horsepower ratings reflect a service factor of 1, a chain length of approximately 100 pitches, use of interference-fit connecting links, use of recommended lubrication methods, and a drive arrangement where two aligned sprockets are mounted on parallel shafts in a horizontal plane. Under these conditions, approximately 15,000 hr of service life at full load operation may generally be expected.

Substantial increases in rated speed loads can be utilized, as when a service life of less than 15,000 hr is satisfactory, or when full load operation is encountered only during a portion of the required service life.

It is beyond the scope of this publication to present selection procedures for all conditions. Consult chain manufacturers for assistance with any special application requirements.

A1.1.2 Drive Selection. The horsepower ratings relate to the speed of the smaller sprocket and drive selections are made on this basis, whether the drive is speed reducing or speed increasing.

Drives with more than two sprockets, idlers, composite duty cycles, or other unusual conditions often require special consideration. It is advisable to consult chain manufacturers for selections of this nature.

Where quietness or extra smooth operation are of special importance, a small pitch chain operating over large diameter sprockets will minimize noise and vibration.

When making drive selections, consideration is given to the loads imposed on the chain by the type of input power and the type of equipment to be driven. Service factors are used to compensate for these loads, and the required horsepower rating of the chain is determined by the following equation:

$$\text{required hp rating} = \frac{\text{hp to be transmitted} \times \text{service factor}}{\text{multiple strand factor}}$$

[1] Made available through the cooperation of the American Chain Association.

A1.2 Service Factors

The service factors in Table A1 are for normal chain loading. For unusual or extremely severe operating conditions not shown in this table, it is desirable to use larger service factors.

A1.3 Multiple Strand Factors

Horsepower ratings for single strand chains are shown in Tables A4 through A17. The horsepower ratings for multiple strand chains equal single strand ratings multiplied by the factors shown in Table A2.

A1.4 Lubrication

It has been shown that a separating wedge of fluid lubricant is formed in operating chain joints much like that formed in journal bearings. Therefore, fluid lubricant must be applied to assure an oil supply to the joints and minimize metal-to-metal contact. Lubrication, if supplied in sufficient volume, also provides effective cooling and impact damping at the higher speeds. For this reason, it is important that the lubrication recommendations be followed. *The horsepower rating tables apply only to drives lubricated in the manner specified in the tables.*

NOTE: Zero values in the horsepower rating tables indicate speeds beyond the maximum recommended. Operation at these speeds may result in excessive chain joint galling, regardless of the volume of lubricant applied.

Chain drives should be protected against dirt and moisture, and the oil supply kept free of contamination. Periodic oil change is desirable. A good grade of nondetergent petroleum-base oil is recommended. Heavy oils and greases are generally too stiff to enter and fill the

Table A1 Service Factors

	Type of Input Power		
Type of Driven Load	Internal Combustion Engine With Hydraulic Drive	Electric Motor or Turbine	Internal Combustion Engine With Mechanical Drive
Smooth	1.0	1.0	1.2
Moderate shock	1.2	1.3	1.4
Heavy shock	1.4	1.5	1.7

Copyright ASME International
Provided by IHS under license with ASME
No reproduction or networking permitted without license from IHS
Not for Resale

Table A2 Multiple Strand Factors

Number of Strands	Multiple Strand Factor
2	1.7
3	2.5
4	3.3

Table A3 Lubricant Viscosity

Temperature, °F	Recommended Lubricant
20– 40	SAE 20
40–100	SAE 30
100–120	SAE 40
120–140	SAE 50

chain joints. Table A3 indicates the proper lubricant viscosity for various surrounding temperatures.

There are three basic types of lubrication for chain drives. The recommended type shown in the horsepower rating tables is influenced by chain speed and the amount of power transmitted. These are *minimum* lubrication requirements, and the use of a better type (e.g., Type C instead of Type B) is acceptable and may be beneficial. Chain life can vary appreciably depending upon the way the drive is lubricated. The better the lubrication, the longer the chain life. For this reason, it is important that the lubrication recommendations be followed when using the ratings given in these tables.

(a) Type A — Manual or Drip Lubrication

(1) For manual lubrication, oil is applied copiously with a brush or spout can at least once every 8 hr of operation. Volume and frequency should be sufficient to prevent overheating of the chain or discoloration in the chain joints.

(2) For drip lubrication, oil drops are directed between the link plate edges from a drip lubricator. Volume and frequency should be sufficient to prevent discoloration of lubricant in the chain joints. Precaution must be taken against misdirection of the drops by windage.

(b) Type B — Bath or Disc Lubrication

(1) For bath lubrication, the lower strand of chain runs through a sump of oil in the drive housing. The oil level should reach the pitch line of the chain at its lowest point while operating.

(2) For disc lubrication, the chain operates above the oil level. The disc picks up oil from the sump and deposits it onto the chain, usually by means of a trough. The diameter of the disc should be such as to produce rim speeds between 600 ft/min (3 m/s) minimum and 8000 ft/min (40 m/s) maximum.

(c) Type C — Oil Stream Lubrication. The lubricant is usually supplied by a circulating pump capable of supplying each chain drive with a continuous stream of oil. The oil should be directed at the slack strand, and applied inside the chain loop and evenly across the chain width.

Consult chain manufacturers when it appears desirable to use a type of lubrication other than that recommended.

A1.5 Sprockets

Sprockets should have tooth form, thickness, profile, and diameters conforming to this Standard. For maximum service life, small sprockets operating at moderate to high speeds, or near the rated horsepower, should have hardened teeth. Normally, large sprockets should not exceed 120 teeth.

A1.6 Center Distance

In general, a center distance of 30 to 50 chain pitches is most desirable. The distance between the sprocket centers should provide at least 120 deg chain wrap on the smaller sprocket.

Drives may be installed with either adjustable or fixed center distances. Adjustable centers simplify the control of chain slack.

For drives on fixed centers, an idler or shoe may be used to provide slack adjustment. These devices may also be used to control backlash, or to assure 120 deg minimum chain wrap on the smaller sprocket. *Sufficient housing clearance must always be provided for the slack chain to obtain full chain life.*

A1.7 Alignment

Accurate alignment of shafts and sprocket tooth faces provides uniform distribution of the load across the entire chain width and contributes substantially to optimum drive life. Shafting, bearings, and foundations should be suitable to maintain the initial alignment. Periodic maintenance should include an inspection of alignment to insure optimum chain life.

A1.8 Horsepower Ratings Tables

To properly use the horsepower ratings (Tables A4 through A17), the following factors must be taken into consideration:

(a) service factors of Table A1;

(b) multiple strand factors of Table A2;

(c) lubrication. The horsepower established from the sprocket and speed combination of the drive under consideration will indicate a method of lubrication. This method or a better one must be used to obtain optimum chain life.

NOTE: The horsepower ratings permit the use of interference-fit connecting links. Chains using interference-fit offset sections or slip-fit connecting links may not meet these ratings. Chains using slip-fit offset links will not meet these ratings. Consult the chain manufacturer for specific derating factors for their slip-fit connecting links, offset sections, or offset links.

Copyright ASME International
Provided by IHS under license with ASME
No reproduction or networking permitted without license from IHS
Not for Resale

Copyright ASME International
Provided by IHS under license with ASME
No reproduction or networking permitted without license from IHS

Table A4 Horsepower Ratings, Standard Single Strand Roller Chain — No. 25

No. of Teeth in Small Spkt.	1/4 in. Pitch Revolutions Per Minute — Small Sprocket																								
	50	100	300	500	700	900	1200	1500	1800	2100	2500	3000	3500	4000	4500	5000	5500	6000	6500	7000	7500	8000	8500	9000	10,000
11	0.03	0.05	0.14	0.23	0.31	0.39	0.50	0.62	0.73	0.83	0.98	1.15	1.32	1.38	1.16	0.99	0.86	0.75	0.67	0.60	0.54	0.49	0.45	0.41	0.35
12	0.03	0.06	0.16	0.25	0.34	0.43	0.55	0.68	0.80	0.92	1.07	1.26	1.45	1.57	1.32	1.12	0.97	0.86	0.76	0.68	0.61	0.56	0.51	0.47	0.40
13	0.04	0.06	0.17	0.27	0.37	0.47	0.60	0.74	0.87	1.00	1.17	1.38	1.58	1.77	1.49	1.27	1.10	0.96	0.86	0.77	0.69	0.63	0.57	0.53	0.45
14	0.04	0.07	0.19	0.30	0.40	0.50	0.65	0.80	0.94	1.08	1.27	1.49	1.71	1.93	1.66	1.42	1.23	1.08	0.96	0.86	0.77	0.70	0.64	0.59	0.50
15	0.04	0.08	0.20	0.32	0.43	0.54	0.70	0.86	1.01	1.17	1.36	1.61	1.85	2.08	1.84	1.57	1.36	1.20	1.06	0.95	0.86	0.78	0.71	0.65	0.56
16	0.04	0.08	0.22	0.34	0.47	0.58	0.76	0.92	1.09	1.25	1.46	1.72	1.98	2.23	2.03	1.73	1.50	1.32	1.17	1.05	0.94	0.86	0.78	0.72	0.61
17	0.05	0.09	0.23	0.37	0.50	0.62	0.81	0.99	1.16	1.33	1.56	1.84	2.11	2.38	2.22	1.90	1.64	1.44	1.28	1.14	1.03	0.94	0.86	0.79	0.67
18	0.05	0.09	0.25	0.39	0.53	0.66	0.86	1.05	1.24	1.42	1.66	1.96	2.25	2.53	2.42	2.07	1.79	1.57	1.39	1.25	1.12	1.02	0.93	0.86	0.73
19	0.05	0.10	0.26	0.41	0.56	0.70	0.91	1.11	1.31	1.50	1.76	2.07	2.38	2.69	2.62	2.24	1.94	1.70	1.51	1.35	1.22	1.11	1.01	0.93	0.79
20	0.06	0.10	0.28	0.44	0.59	0.74	0.96	1.17	1.38	1.59	1.86	2.19	2.52	2.84	2.83	2.42	2.10	1.84	1.63	1.46	1.32	1.20	1.09	1.00	0.86
21	0.06	0.11	0.29	0.46	0.62	0.78	1.01	1.24	1.46	1.68	1.96	2.31	2.66	2.99	3.05	2.60	2.26	1.98	1.76	1.57	1.42	1.29	1.17	1.08	0.92
22	0.06	0.11	0.31	0.48	0.66	0.82	1.07	1.30	1.53	1.76	2.06	2.43	2.79	3.15	3.27	2.79	2.42	2.12	1.88	1.69	1.52	1.38	1.26	1.16	0.99
23	0.06	0.12	0.32	0.51	0.69	0.86	1.12	1.37	1.61	1.85	2.16	2.55	2.93	3.30	3.50	2.98	2.59	2.27	2.01	1.80	1.62	1.47	1.35	1.24	1.06
24	0.07	0.13	0.34	0.53	0.72	0.90	1.17	1.43	1.69	1.94	2.27	2.67	3.07	3.46	3.73	3.18	2.76	2.42	2.15	1.92	1.73	1.57	1.44	1.32	1.12
25	0.07	0.13	0.35	0.56	0.75	0.94	1.22	1.50	1.76	2.02	2.37	2.79	3.21	3.61	3.96	3.38	2.93	2.57	2.28	2.04	1.84	1.67	1.53	1.40	1.20
26	0.07	0.14	0.37	0.58	0.79	0.98	1.28	1.56	1.84	2.11	2.47	2.91	3.34	3.77	4.19	3.59	3.11	2.73	2.42	2.17	1.95	1.77	1.62	1.49	1.27
28	0.08	0.15	0.40	0.63	0.85	1.07	1.38	1.69	1.99	2.29	2.68	3.15	3.62	4.09	4.54	4.01	3.47	3.05	2.70	2.42	2.18	1.98	1.81	1.66	1.42
30	0.08	0.16	0.43	0.68	0.92	1.15	1.49	1.82	2.15	2.46	2.88	3.40	3.90	4.40	4.89	4.45	3.85	3.38	3.00	2.68	2.42	2.20	2.01	1.84	1.57
32	0.09	0.17	0.46	0.73	0.98	1.23	1.60	1.95	2.30	2.64	3.09	3.64	4.18	4.72	5.25	4.90	4.25	3.73	3.30	2.96	2.67	2.42	2.21	2.03	1.73
35	0.10	0.19	0.51	0.80	1.08	1.36	1.76	2.15	2.53	2.91	3.41	4.01	4.61	5.20	5.78	5.60	4.86	4.26	3.78	3.38	3.05	2.77	2.53	2.32	1.98
40	0.12	0.22	0.58	0.92	1.25	1.57	2.03	2.48	2.93	3.36	3.93	4.64	5.32	6.00	6.68	6.85	5.93	5.21	4.62	4.13	3.73	3.38	3.09	2.83	2.42
45	0.13	0.25	0.66	1.05	1.42	1.78	2.31	2.82	3.32	3.82	4.47	5.26	6.05	6.82	7.58	8.17	7.08	6.21	5.51	4.93	4.45	4.04	3.69	3.38	2.89
	Type A				Type B									Type C											

Type A: Manual or drip lubrication
Type B: Bath or disc lubrication
Type C: Oil stream lubrication

GENERAL NOTES:
(a) The limiting RPM for each lubrication type is read from the column to the left of the boundary line shown.
(b) The horsepower ratings of multiple strand chains are greater than those of single strand chain. See Table A2 for multiple strand factors.
(c) See para. A1.4 for a detailed description of lubrication types.

Not for Resale

Copyright ASME International
Provided by IHS under license with ASME
No reproduction or networking permitted without license from IHS

Table A5 Horsepower Ratings, Standard Single Strand Roller Chain — No. 35

No. of Teeth in Small Spkt.	3/8 in. Pitch Revolutions Per Minute — Small Sprocket																								
	50	100	300	500	700	900	1200	1500	1800	2100	2500	3000	3500	4000	4500	5000	5500	6000	6500	7000	7500	8000	8500	9000	10,000
11	0.10	0.18	0.49	0.77	1.05	1.31	1.70	2.08	2.45	2.82	3.30	2.94	2.33	1.91	1.60	1.37	1.18	1.04	0.92	0.82	0.74	0.67	0.62	0.57	0.48
12	0.11	0.20	0.54	0.85	1.15	1.44	1.87	2.29	2.70	3.10	3.62	3.35	2.66	2.17	1.82	1.56	1.35	1.18	1.05	0.94	0.85	0.77	0.70	0.64	0.55
13	0.12	0.22	0.59	0.93	1.26	1.57	2.04	2.49	2.94	3.38	3.95	3.77	3.00	2.45	2.05	1.75	1.52	1.33	1.18	1.06	0.95	0.87	0.79	0.73	0.62
14	0.13	0.24	0.63	1.01	1.36	1.71	2.21	2.70	3.18	3.66	4.28	4.22	3.35	2.74	2.30	1.96	1.70	1.49	1.32	1.18	1.07	0.97	0.88	0.81	0.69
15	0.14	0.25	0.68	1.08	1.47	1.84	2.38	2.91	3.43	3.94	4.61	4.68	3.71	3.04	2.55	2.17	1.88	1.65	1.47	1.31	1.18	1.07	0.98	0.90	0.77
16	0.15	0.27	0.73	1.16	1.57	1.97	2.55	3.12	3.68	4.22	4.94	5.15	4.09	3.35	2.81	2.40	2.08	1.82	1.62	1.45	1.30	1.18	1.08	0.99	0.85
17	0.16	0.29	0.78	1.24	1.68	2.10	2.73	3.33	3.93	4.51	5.28	5.64	4.48	3.67	3.07	2.62	2.27	2.00	1.77	1.58	1.43	1.30	1.18	1.09	0.93
18	0.17	0.31	0.83	1.32	1.78	2.24	2.90	3.54	4.18	4.80	5.61	6.15	4.88	3.99	3.35	2.86	2.48	2.17	1.93	1.73	1.56	1.41	1.29	1.18	1.01
19	0.18	0.33	0.88	1.40	1.89	2.37	3.07	3.76	4.43	5.09	5.95	6.67	5.29	4.33	3.63	3.10	2.69	2.36	2.09	1.87	1.69	1.53	1.40	1.28	1.10
20	0.19	0.35	0.93	1.48	2.00	2.51	3.25	3.97	4.68	5.38	6.29	7.20	5.72	4.68	3.92	3.35	2.90	2.55	2.26	2.02	1.82	1.65	1.51	1.39	1.18
21	0.20	0.37	0.98	1.56	2.11	2.64	3.42	4.19	4.93	5.67	6.63	7.75	6.15	5.03	4.22	3.60	3.12	2.74	2.43	2.17	1.96	1.78	1.62	1.49	1.27
22	0.21	0.38	1.03	1.64	2.22	2.78	3.60	4.40	5.19	5.96	6.97	8.21	6.59	5.40	4.52	3.86	3.35	2.94	2.61	2.33	2.10	1.91	1.74	1.60	1.37
23	0.22	0.40	1.08	1.72	2.33	2.92	3.78	4.62	5.44	6.25	7.31	8.62	7.05	5.77	4.83	4.13	3.58	3.14	2.79	2.49	2.25	2.04	1.86	1.71	1.46
24	0.23	0.42	1.14	1.80	2.44	3.05	3.96	4.84	5.70	6.55	7.66	9.02	7.51	6.15	5.15	4.40	3.81	3.35	2.97	2.66	2.40	2.17	1.99	1.82	1.56
25	0.24	0.44	1.19	1.88	2.55	3.19	4.13	5.05	5.95	6.84	8.00	9.43	7.99	6.54	5.48	4.68	4.05	3.56	3.16	2.82	2.55	2.31	2.11	1.94	1.65
26	0.25	0.46	1.24	1.96	2.66	3.33	4.31	5.27	6.21	7.14	8.35	9.84	8.47	6.93	5.81	4.96	4.30	3.77	3.35	3.00	2.70	2.45	2.24	2.05	1.75
28	0.27	0.50	1.34	2.12	2.88	3.61	4.67	5.71	6.73	7.73	9.05	10.7	9.47	7.75	6.49	5.55	4.81	4.22	3.74	3.35	3.02	2.74	2.50	2.30	1.96
30	0.29	0.54	1.45	2.29	3.10	3.89	5.03	6.15	7.25	8.33	9.74	11.5	10.5	8.59	7.20	6.15	5.33	4.68	4.15	3.71	3.35	3.04	2.77	2.55	2.17
32	0.31	0.58	1.55	2.45	3.32	4.17	5.40	6.60	7.77	8.93	10.4	12.3	11.6	9.47	7.93	6.77	5.87	5.15	4.57	4.09	3.69	3.35	3.06	2.81	0
35	0.34	0.64	1.71	2.70	3.66	4.59	5.95	7.27	8.56	9.84	11.5	13.6	13.2	10.8	9.08	7.75	6.72	5.90	5.23	4.68	4.22	3.83	3.50	3.21	0
40	0.39	0.73	1.97	3.12	4.23	5.30	6.87	8.40	9.89	11.4	13.3	15.7	16.2	13.2	11.1	9.47	8.21	7.20	6.39	5.72	5.15	4.68	0		
45	0.45	0.83	2.24	3.55	4.80	6.02	7.80	9.53	11.2	12.9	15.1	17.8	19.3	15.8	13.2	11.3	9.79	8.59	7.62	6.82	0				
	Type A			Type B						Type C															

Type A: Manual or drip lubrication
Type B: Bath or disc lubrication
Type C: Oil stream lubrication

GENERAL NOTES:

(a) The limiting RPM for each lubrication type is read from the column to the left of the boundary line shown.

(b) The horsepower ratings of multiple strand chains are greater than those of single strand chain. See Table A2 for multiple strand factors.

(c) See para. A1.4 for a detailed description of lubrication types.

Not for Resale

Copyright ASME International
Provided by IHS under license with ASME
No reproduction or networking permitted without license from IHS

Table A6 Horsepower Ratings, Standard Single Strand Roller Chain — No. 40

No. of Teeth in Small Spkt.	½ in. Pitch Revolutions Per Minute — Small Sprocket																								
	10	25	50	100	200	300	400	500	700	900	1000	1200	1400	1600	1800	2100	2400	2700	3000	3500	4000	5000	6000	7000	8000
11	0.05	0.12	0.23	0.43	0.80	1.16	1.50	1.83	2.48	3.11	3.42	4.03	4.63	5.22	4.66	3.70	3.03	2.54	2.17	1.72	1.41	1.01	0.77	0.61	0.50
12	0.06	0.14	0.25	0.47	0.88	1.27	1.65	2.01	2.73	3.42	3.76	4.43	5.09	5.74	5.31	4.22	3.45	2.89	2.47	1.96	1.60	1.15	0.87	0.69	0.57
13	0.06	0.15	0.28	0.52	0.96	1.39	1.80	2.20	2.97	3.73	4.10	4.83	5.55	6.26	5.99	4.76	3.89	3.26	2.79	2.21	1.81	1.29	0.98	0.78	0.64
14	0.07	0.16	0.30	0.56	1.04	1.50	1.95	2.38	3.22	4.04	4.44	5.23	6.01	6.78	6.70	5.31	4.35	3.65	3.11	2.47	2.02	1.45	1.10	0.87	0.71
15	0.07	0.17	0.32	0.60	1.12	1.62	2.10	2.56	3.47	4.35	4.78	5.64	6.47	7.30	7.43	5.89	4.82	4.04	3.45	2.74	2.24	1.60	1.22	0.97	0.79
16	0.08	0.19	0.35	0.65	1.20	1.74	2.25	2.75	3.72	4.66	5.13	6.04	6.94	7.83	8.18	6.49	5.31	4.45	3.80	3.02	2.47	1.77	1.34	1.07	0.87
17	0.08	0.20	0.37	0.69	1.29	1.85	2.40	2.93	3.97	4.98	5.48	6.45	7.41	8.36	8.96	7.11	5.82	4.88	4.17	3.31	2.71	1.94	1.47	1.17	0.96
18	0.09	0.21	0.39	0.73	1.37	1.97	2.55	3.12	4.22	5.30	5.82	6.86	7.88	8.89	9.76	7.75	6.34	5.31	4.54	3.60	2.95	2.11	1.60	1.27	0
19	0.09	0.22	0.42	0.78	1.45	2.09	2.71	3.31	4.48	5.62	6.17	7.27	8.36	9.42	10.5	8.40	6.88	5.76	4.92	3.91	3.20	2.29	1.74	1.38	0
20	0.10	0.24	0.44	0.82	1.53	2.21	2.86	3.50	4.73	5.94	6.53	7.69	8.83	9.96	11.1	9.07	7.43	6.22	5.31	4.22	3.45	2.47	1.88	1.49	0
21	0.11	0.25	0.46	0.87	1.62	2.33	3.02	3.69	4.99	6.26	6.88	8.11	9.31	10.5	11.7	9.76	7.99	6.70	5.72	4.54	3.71	2.66	2.02	1.60	0
22	0.11	0.26	0.49	0.91	1.70	2.45	3.17	3.88	5.25	6.58	7.23	8.52	9.79	11.0	12.3	10.5	8.57	7.18	6.13	4.87	3.98	2.85	2.17	1.72	0
23	0.12	0.27	0.51	0.96	1.78	2.57	3.33	4.07	5.51	6.90	7.59	8.94	10.3	11.6	12.9	11.2	9.16	7.68	6.55	5.20	4.26	3.05	2.32	1.84	0
24	0.13	0.29	0.54	1.00	1.87	2.69	3.48	4.26	5.76	7.23	7.95	9.36	10.8	12.1	13.5	11.9	9.76	8.18	6.99	5.54	4.54	3.25	2.47	1.96	0
25	0.13	0.30	0.56	1.05	1.95	2.81	3.64	4.45	6.02	7.55	8.30	9.78	11.2	12.7	14.1	12.7	10.4	8.70	7.43	5.89	4.82	3.45	2.63	0	
26	0.14	0.31	0.58	1.09	2.04	2.93	3.80	4.64	6.28	7.88	8.66	10.2	11.7	13.2	14.7	13.5	11.0	9.23	7.88	6.25	5.12	3.66	2.79	0	
28	0.15	0.34	0.63	1.18	2.20	3.18	4.11	5.03	6.81	8.54	9.39	11.1	12.7	14.3	15.9	15.0	12.3	10.3	8.80	6.99	5.72	4.09	3.11	0	
30	0.16	0.37	0.68	1.27	2.38	3.42	4.43	5.42	7.33	9.20	10.1	11.9	13.7	15.4	17.2	16.7	13.6	11.4	9.76	7.75	6.34	4.54	3.45	0	
32	0.17	0.39	0.73	1.36	2.55	3.67	4.75	5.81	7.86	9.86	10.8	12.8	14.7	16.5	18.4	18.4	15.0	12.6	10.8	8.54	6.99	5.00	0		
35	0.19	0.43	0.81	1.50	2.81	4.04	5.24	6.40	8.66	10.9	11.9	14.1	16.2	18.2	20.3	21.0	17.2	14.4	12.3	9.76	7.99	5.72	0		
40	0.22	0.50	0.93	1.74	3.24	4.67	6.05	7.39	10.0	12.5	13.8	16.3	18.7	21.1	23.4	25.7	21.0	17.6	15.0	11.9	9.76	6.99	0		
45	0.25	0.57	1.06	1.97	3.68	5.30	6.87	8.40	11.4	14.2	15.7	18.5	21.2	23.9	26.6	30.5	25.1	21.0	17.9	14.2	11.7	0			
	Type A				Type B								Type C												

Type A: Manual or drip lubrication
Type B: Bath or disc lubrication
Type C: Oil stream lubrication

GENERAL NOTES:

(a) The limiting RPM for each lubrication type is read from the column to the left of the boundary line shown.

(b) The horsepower ratings of multiple strand chains are greater than those of single strand chain. See Table A2 for multiple strand factors.

(c) See para. A1.4 for a detailed description of lubrication types.

Not for Resale

Copyright ASME International
Provided by IHS under license with ASME
No reproduction or networking permitted without license from IHS

Table A7 Horsepower Ratings, Standard Single Strand Roller Chain — No. 41

No. of Teeth in Small Sprkt.	½ in. Pitch Lightweight Machinery Chain Revolutions Per Minute — Small Sprocket																								
	10	25	50	100	200	300	400	500	700	900	1000	1200	1400	1600	1800	2100	2400	2700	3000	3500	4000	5000	6000	7000	8000
11	0.03	0.07	0.13	0.24	0.44	0.64	0.82	1.01	1.37	1.71	1.88	1.71	1.36	1.11	0.93	0.74	0.61	0.51	0.43	0.34	0.28	0.20	0.15	0.12	0.10
12	0.03	0.07	0.14	0.26	0.49	0.70	0.91	1.11	1.50	1.88	2.07	1.95	1.55	1.27	1.06	0.84	0.69	0.58	0.49	0.39	0.32	0.23	0.17	0.14	0.11
13	0.04	0.08	0.15	0.28	0.53	0.76	0.99	1.21	1.63	2.05	2.25	2.20	1.75	1.43	1.20	0.95	0.78	0.65	0.56	0.44	0.36	0.26	0.20	0.16	0.13
14	0.04	0.09	0.16	0.31	0.57	0.83	1.07	1.31	1.77	2.22	2.44	2.46	1.95	1.60	1.34	1.06	0.87	0.73	0.62	0.49	0.40	0.29	0.22	0.17	0.14
15	0.04	0.09	0.18	0.33	0.62	0.89	1.15	1.41	1.91	2.39	2.63	2.73	2.17	1.77	1.49	1.18	0.96	0.81	0.69	0.55	0.45	0.32	0.24	0.19	0.16
16	0.04	0.10	0.19	0.36	0.66	0.95	1.24	1.51	2.05	2.57	2.82	3.01	2.39	1.95	1.64	1.30	1.06	0.89	0.76	0.60	0.49	0.35	0.27	0.21	0.17
17	0.05	0.11	0.20	0.38	0.71	1.02	1.32	1.61	2.18	2.74	3.01	3.29	2.61	2.14	1.79	1.42	1.16	0.98	0.83	0.66	0.54	0.39	0.29	0.23	0.19
18	0.05	0.12	0.22	0.40	0.75	1.08	1.40	1.72	2.32	2.91	3.20	3.59	2.85	2.33	1.95	1.55	1.27	1.06	0.91	0.72	0.59	0.42	0.32	0.25	0
19	0.05	0.12	0.23	0.43	0.80	1.15	1.49	1.82	2.46	3.09	3.40	3.89	3.09	2.53	2.12	1.68	1.38	1.15	0.98	0.78	0.64	0.46	0.35	0.28	0
20	0.06	0.13	0.24	0.45	0.84	1.21	1.57	1.92	2.60	3.26	3.59	4.20	3.33	2.73	2.29	1.81	1.49	1.24	1.06	0.84	0.69	0.49	0.38	0.30	0
21	0.06	0.14	0.26	0.48	0.89	1.28	1.66	2.03	2.74	3.44	3.78	4.46	3.59	2.94	2.46	1.95	1.60	1.34	1.14	0.91	0.74	0.53	0.40	0.32	0
22	0.06	0.14	0.27	0.50	0.93	1.35	1.74	2.13	2.89	3.62	3.98	4.69	3.85	3.15	2.64	2.09	1.71	1.44	1.23	0.97	0.80	0.57	0.43	0.34	0
23	0.06	0.15	0.28	0.53	0.98	1.41	1.83	2.24	3.03	3.80	4.17	4.92	4.11	3.37	2.82	2.24	1.83	1.54	1.31	1.04	0.85	0.61	0.46	0.37	0
24	0.07	0.16	0.29	0.55	1.03	1.48	1.92	2.34	3.17	3.97	4.37	5.15	4.38	3.59	3.01	2.39	1.95	1.64	1.40	1.11	0.91	0.65	0.49	0.39	0
25	0.07	0.17	0.31	0.57	1.07	1.55	2.00	2.45	3.31	4.15	4.57	5.38	4.66	3.81	3.20	2.54	2.08	1.74	1.49	1.18	0.96	0.69	0.53	0	
26	0.07	0.17	0.32	0.60	1.12	1.61	2.09	2.55	3.46	4.33	4.76	5.61	4.94	4.05	3.39	2.69	2.20	1.85	1.58	1.25	1.02	0.73	0.56	0	
28	0.08	0.19	0.35	0.65	1.21	1.75	2.26	2.77	3.74	4.69	5.16	6.08	5.52	4.52	3.79	3.01	2.46	2.06	1.76	1.40	1.14	0.82	0.62	0	
30	0.08	0.20	0.38	0.70	1.31	1.88	2.44	2.98	4.03	5.06	5.56	6.55	6.13	5.01	4.20	3.33	2.73	2.29	1.95	1.55	1.27	0.91	0.69	0	
32	0.09	0.22	0.40	0.75	1.40	2.02	2.61	3.20	4.33	5.42	5.96	7.03	6.75	5.52	4.63	3.67	3.01	2.52	2.15	1.71	1.40	1.00	0		
35	0.10	0.24	0.44	0.83	1.54	2.22	2.88	3.52	4.76	5.97	6.57	7.74	7.72	6.32	5.29	4.20	3.44	2.88	2.46	1.95	1.60	1.14	0		
40	0.12	0.27	0.51	0.96	1.78	2.57	3.33	4.07	5.50	6.90	7.59	8.94	9.43	7.72	6.47	5.13	4.20	3.52	3.01	2.39	1.95	1.40	0		
45	0.14	0.31	0.58	1.08	2.02	2.92	3.78	4.62	6.25	7.84	8.62	10.2	11.3	9.21	7.72	6.13	5.01	4.20	3.59	2.85	2.33	0			
	Type A				Type B								Type C												

Type A: Manual or drip lubrication
Type B: Bath or disc lubrication
Type C: Oil stream lubrication

GENERAL NOTES:

(a) The limiting RPM for each lubrication type is read from the column to the left of the boundary line shown.

(b) The horsepower ratings of multiple strand chains are greater than those of single strand chain. See Table A2 for multiple strand factors.

(c) See para. A1.4 for a detailed description of lubrication types.

Not for Resale

Copyright ASME International
Provided by IHS under license with ASME
No reproduction or networking permitted without license from IHS

Table A8 Horsepower Ratings, Standard Single Strand Roller Chain — No. 50

No. of Teeth in Small Spkt.	5/8 in. Pitch Revolutions Per Minute — Small Sprocket																								
	10	25	50	100	200	300	400	500	700	900	1000	1200	1400	1600	1800	2100	2400	2700	3000	3500	4000	4500	5000	5500	6000
11	0.11	0.24	0.45	0.84	1.56	2.25	2.92	3.57	4.83	6.06	6.66	7.85	8.13	6.65	5.58	4.42	3.62	3.04	2.59	2.06	1.68	1.41	1.20	1.04	0.92
12	0.12	0.26	0.49	0.92	1.72	2.47	3.21	3.92	5.31	6.65	7.31	8.62	9.26	7.58	6.35	5.04	4.13	3.46	2.95	2.34	1.92	1.61	1.37	1.19	1.04
13	0.13	0.29	0.54	1.00	1.87	2.70	3.50	4.27	5.78	7.25	7.97	9.40	10.4	8.55	7.16	5.69	4.65	3.90	3.33	2.64	2.16	1.81	1.55	1.34	0
14	0.14	0.31	0.58	1.09	2.03	2.92	3.79	4.63	6.27	7.86	8.64	10.2	11.7	9.55	8.01	6.35	5.20	4.36	3.72	2.95	2.42	2.03	1.73	1.50	0
15	0.15	0.34	0.63	1.17	2.19	3.15	4.08	4.99	6.75	8.47	9.31	11.0	12.6	10.6	8.88	7.05	5.77	4.83	4.13	3.27	2.68	2.25	1.92	1.66	0
16	0.16	0.36	0.67	1.26	2.34	3.38	4.37	5.35	7.24	9.08	9.98	11.8	13.5	11.7	9.78	7.76	6.35	5.32	4.55	3.61	2.95	2.47	2.11	1.83	0
17	0.17	0.39	0.72	1.34	2.50	3.61	4.67	5.71	7.73	9.69	10.7	12.6	14.4	12.8	10.7	8.50	6.96	5.83	4.98	3.95	3.23	2.71	2.31	2.01	0
18	0.18	0.41	0.76	1.43	2.66	3.83	4.97	6.07	8.22	10.3	11.3	13.4	15.3	13.9	11.7	9.26	7.58	6.35	5.42	4.30	3.52	2.95	2.52	0	
19	0.19	0.43	0.81	1.51	2.82	4.07	5.27	6.44	8.72	10.9	12.0	14.2	16.3	15.1	12.7	10.0	8.22	6.89	5.88	4.67	3.82	3.20	2.73	0	
20	0.20	0.46	0.86	1.60	2.98	4.30	5.57	6.80	9.21	11.5	12.7	15.0	17.2	16.3	13.7	10.8	8.88	7.44	6.35	5.04	4.13	3.46	2.95	0	
21	0.21	0.48	0.90	1.69	3.14	4.53	5.87	7.17	9.71	12.2	13.4	15.8	18.1	17.6	14.7	11.7	9.55	8.01	6.84	5.42	4.44	3.72	3.18	0	
22	0.22	0.51	0.95	1.77	3.31	4.76	6.17	7.54	10.2	12.8	14.1	16.6	19.1	18.8	15.8	12.5	10.2	8.59	7.33	5.82	4.76	3.99	3.41	0	
23	0.23	0.53	1.00	1.86	3.47	5.00	6.47	7.91	10.7	13.4	14.8	17.4	20.0	20.1	16.9	13.4	11.0	9.18	7.84	6.22	5.09	4.27	0		
24	0.25	0.56	1.04	1.95	3.63	5.23	6.78	8.29	11.2	14.1	15.5	18.2	20.9	21.4	18.0	14.3	11.7	9.78	8.35	6.63	5.42	4.55	0		
25	0.26	0.58	1.09	2.03	3.80	5.47	7.08	8.66	11.7	14.7	16.2	19.0	21.9	22.8	19.1	15.2	12.4	10.4	8.88	7.05	5.77	4.83	0		
26	0.27	0.61	1.14	2.12	3.96	5.70	7.39	9.03	12.2	15.3	16.9	19.9	22.8	24.2	20.3	16.1	13.2	11.0	9.42	7.47	6.12	5.13	0		
28	0.29	0.66	1.23	2.30	4.29	6.18	8.01	9.79	13.2	16.6	18.3	21.5	24.7	27.0	22.6	18.0	14.7	12.3	10.5	8.35	6.84	5.73	0		
30	0.31	0.71	1.33	2.48	4.62	6.66	8.63	10.5	14.3	17.9	19.7	23.2	26.6	30.0	25.1	19.9	16.3	13.7	11.7	9.26	7.58	0			
32	0.33	0.76	1.42	2.66	4.96	7.14	9.25	11.3	15.3	19.2	21.1	24.9	28.6	32.2	27.7	22.0	18.0	15.1	12.9	10.2	8.35	0			
35	0.37	0.84	1.57	2.93	5.46	7.86	10.2	12.5	16.9	21.1	23.2	27.4	31.5	35.5	31.6	25.1	20.6	17.2	14.7	11.7	9.55	0			
40	0.43	0.97	1.81	3.38	6.31	9.08	11.8	14.4	19.5	24.4	26.8	31.6	36.3	41.0	38.7	30.7	25.1	21.0	18.0	14.3	0				
45	0.48	1.10	2.06	3.84	7.16	10.3	13.4	16.3	22.1	27.7	30.5	35.9	41.3	46.5	46.1	36.6	30.0	25.1	21.4	0					
	Type A				Type B					Type C															

Type A: Manual or drip lubrication
Type B: Bath or disc lubrication
Type C: Oil stream lubrication

GENERAL NOTES:

(a) The limiting RPM for each lubrication type is read from the column to the left of the boundary line shown.

(b) The horsepower ratings of multiple strand chains are greater than those of single strand chain. See Table A2 for multiple strand factors.

(c) See para. A1.4 for a detailed description of lubrication types.

Not for Resale

Copyright ASME International
Provided by IHS under license with ASME
No reproduction or networking permitted without license from IHS

Table A9 Horsepower Ratings, Standard Single Strand Roller Chain — No. 60

No. of Teeth in Small Spkt.	3/4 in. Pitch Revolutions Per Minute — Small Sprocket																								
	10	25	50	100	150	200	300	400	500	600	700	800	900	1000	1100	1200	1400	1600	1800	2000	2500	3000	3500	4000	4500
11	0.18	0.41	0.77	1.44	2.07	2.69	3.87	5.02	6.13	7.23	8.30	9.36	10.4	11.4	12.5	11.9	9.41	7.70	6.45	5.51	3.94	3.00	2.38	1.95	1.63
12	0.20	0.45	0.85	1.58	2.28	2.95	4.25	5.51	6.74	7.94	9.12	10.3	11.4	12.6	13.7	13.5	10.7	8.77	7.35	6.28	4.49	3.42	2.71	2.22	1.86
13	0.22	0.50	0.92	1.73	2.49	3.22	4.64	6.01	7.34	8.65	9.94	11.2	12.5	13.7	14.9	15.2	12.1	9.89	8.29	7.08	5.06	3.85	3.06	2.50	0
14	0.24	0.54	1.00	1.87	2.69	3.49	5.02	6.51	7.96	9.37	10.8	12.1	13.5	14.8	16.2	17.0	13.5	11.1	9.26	7.91	5.66	4.31	3.42	2.80	0
15	0.25	0.58	1.08	2.01	2.90	3.76	5.41	7.01	8.57	10.1	11.6	13.1	14.5	16.0	17.4	18.8	15.0	12.3	10.3	8.77	6.28	4.77	3.79	3.10	0
16	0.27	0.62	1.16	2.16	3.11	4.03	5.80	7.52	9.19	10.8	12.4	14.0	15.6	17.1	18.7	20.2	16.5	13.5	11.3	9.66	6.91	5.26	4.17	3.42	0
17	0.29	0.66	1.24	2.31	3.32	4.30	6.20	8.03	9.81	11.6	13.3	15.0	16.7	18.3	19.9	21.6	18.1	14.8	12.4	10.6	7.57	5.76	4.57	3.74	0
18	0.31	0.70	1.31	2.45	3.53	4.58	6.59	8.54	10.4	12.3	14.1	15.9	17.7	19.5	21.2	22.9	19.7	16.1	13.5	11.5	8.25	6.28	4.98	4.08	0
19	0.33	0.75	1.39	2.60	3.74	4.85	6.99	9.05	11.1	13.0	15.0	16.9	18.8	20.6	22.5	24.3	21.4	17.5	14.6	12.5	8.95	6.81	5.40	4.42	0
20	0.35	0.79	1.47	2.75	3.96	5.13	7.38	9.57	11.7	13.8	15.8	17.9	19.8	21.8	23.8	25.7	23.1	18.9	15.8	13.5	9.66	7.35	5.83	0	
21	0.36	0.83	1.55	2.90	4.17	5.40	7.78	10.1	12.3	14.5	16.7	18.8	20.9	23.0	25.1	27.1	24.8	20.3	17.0	14.5	10.4	7.91	6.28	0	
22	0.38	0.87	1.63	3.05	4.39	5.68	8.19	10.6	13.0	15.3	17.5	19.8	22.0	24.2	26.4	28.5	26.6	21.8	18.2	15.6	11.1	8.48	6.73	0	
23	0.40	0.92	1.71	3.19	4.60	5.96	8.59	11.1	13.6	16.0	18.4	20.8	23.1	25.4	27.7	29.9	28.4	23.3	19.5	16.7	11.9	9.07	7.19	0	
24	0.42	0.96	1.79	3.35	4.82	6.24	8.99	11.6	14.2	16.8	19.3	21.7	24.2	26.6	29.0	31.3	30.3	24.8	20.8	17.8	12.7	9.66	7.67	0	
25	0.44	1.00	1.87	3.50	5.04	6.52	9.40	12.2	14.9	17.5	20.1	22.7	25.3	27.8	30.3	32.7	32.2	26.4	22.1	18.9	13.5	10.3	8.15	0	
26	0.46	1.05	1.95	3.65	5.25	6.81	9.80	12.7	15.5	18.3	21.0	23.7	26.4	29.0	31.6	34.1	34.2	28.0	23.4	20.0	14.3	10.9	8.65	0	
28	0.50	1.13	2.12	3.95	5.69	7.37	10.6	13.8	16.8	19.8	22.8	25.7	28.5	31.4	34.2	37.0	38.2	31.3	26.2	22.4	16.0	12.2	0		
30	0.54	1.22	2.28	4.26	6.13	7.94	11.4	14.8	18.1	21.4	24.5	27.7	30.8	33.8	36.8	39.8	42.4	34.7	29.1	24.8	17.8	13.5	0		
32	0.57	1.31	2.45	4.56	6.57	8.52	12.3	15.9	19.4	22.9	26.3	29.7	33.0	36.3	39.5	42.7	46.7	38.2	32.0	27.3	19.6	14.9	0		
35	0.63	1.44	2.69	5.03	7.24	9.38	13.5	17.5	21.4	25.2	29.0	32.7	36.3	39.9	43.5	47.1	53.4	43.7	36.6	31.3	22.4	17.0	0		
40	0.73	1.67	3.11	5.81	8.37	10.8	15.6	20.2	24.7	29.1	33.5	37.7	42.0	46.1	50.3	54.4	62.5	53.4	44.7	38.2	27.3	0			
45	0.83	1.89	3.53	6.60	9.50	12.3	17.7	23.0	28.1	33.1	38.0	42.9	47.7	52.4	57.1	61.7	70.9	63.7	53.4	45.6	32.6	0			
	Type A						Type B										Type C								

Type A: Manual or drip lubrication
Type B: Bath or disc lubrication
Type C: Oil stream lubrication

GENERAL NOTES:

(a) The limiting RPM for each lubrication type is read from the column to the left of the boundary line shown.

(b) The horsepower ratings of multiple strand chains are greater than those of single strand chain. See Table A2 for multiple strand factors.

(c) See para. A1.4 for a detailed description of lubrication types.

Not for Resale

Copyright ASME International
Provided by IHS under license with ASME
No reproduction or networking permitted without license from IHS

Table A10 Horsepower Ratings, Standard Single Strand Roller Chain — No. 80

No. of Teeth in Small Spkt.	1 in. Pitch Revolutions Per Minute — Small Sprocket																								
	10	25	50	100	150	200	300	400	500	600	700	800	900	1000	1100	1200	1400	1600	1800	2000	2200	2400	2700	3000	3400
11	0.42	0.97	1.80	3.36	4.84	6.28	9.04	11.7	14.3	16.9	19.4	21.9	23.0	19.6	17.0	14.9	11.8	9.69	8.12	6.93	6.01	5.27	4.42	*3.77*	*1.70*
12	0.47	1.06	1.98	3.69	5.32	6.89	9.93	12.9	15.7	18.5	21.3	24.0	26.2	22.3	19.4	17.0	13.5	11.0	9.25	7.90	6.85	6.01	5.04	*4.30*	*0*
13	0.51	1.16	2.16	4.03	5.80	7.52	10.8	14.0	17.1	20.2	23.2	26.2	29.1	25.2	21.8	19.2	15.2	12.5	10.4	8.91	7.72	6.78	5.68	*4.85*	*0*
14	0.55	1.25	2.34	4.36	6.29	8.14	11.7	15.2	18.6	21.9	25.1	28.4	31.5	28.2	24.4	21.4	17.0	13.9	11.7	9.96	8.63	7.57	6.35	*5.42*	*0*
15	0.59	1.35	2.52	4.70	6.77	8.77	12.6	16.4	20.0	23.6	27.1	30.6	34.0	31.2	27.1	23.8	18.9	15.4	12.9	11.0	9.57	8.40	7.04	*6.01*	*0*
16	0.63	1.45	2.70	5.04	7.26	9.41	13.5	17.6	21.5	25.3	29.0	32.8	36.4	34.4	29.8	26.2	20.8	17.0	14.2	12.2	10.5	9.25	*7.76*	*6.62*	*0*
17	0.68	1.55	2.88	5.38	7.75	10.0	14.5	18.7	22.9	27.0	31.0	35.0	38.9	37.7	32.7	28.7	22.7	18.6	15.6	13.3	11.5	10.1	*8.49*	*7.25*	*0*
18	0.72	1.64	3.07	5.72	8.25	10.7	15.4	19.9	24.4	28.7	33.0	37.2	41.4	41.1	35.6	31.2	24.8	20.3	17.0	14.5	12.6	11.0	*9.25*	*7.90*	*0*
19	0.76	1.74	3.25	6.07	8.74	11.3	16.3	21.1	25.8	30.4	35.0	39.4	43.8	44.5	38.6	33.9	26.9	22.0	18.4	15.7	13.6	12.0	*10.0*	*8.57*	*0*
20	0.81	1.84	3.44	6.41	9.24	12.0	17.2	22.3	27.3	32.2	37.0	41.7	46.3	48.1	41.7	36.6	29.0	23.8	19.9	17.0	14.7	12.9	*10.8*	*0*	
21	0.85	1.94	3.62	6.76	9.74	12.6	18.2	23.5	28.8	33.9	39.0	43.9	48.9	51.7	44.8	39.4	31.2	25.6	21.4	18.3	15.9	13.9	*11.7*	*0*	
22	0.90	2.04	3.81	7.11	10.2	13.3	19.1	24.8	30.3	35.7	41.0	46.2	51.4	55.5	48.1	42.2	33.5	27.4	23.0	19.6	17.0	14.9	*12.5*	*0*	
23	0.94	2.14	4.00	7.46	10.7	13.9	20.1	26.0	31.8	37.4	43.0	48.5	53.9	59.3	51.4	45.1	35.8	29.3	24.6	21.0	18.2	15.9	*13.4*	*0*	
24	0.98	2.24	4.19	7.81	11.3	14.6	21.0	27.2	33.2	39.2	45.0	50.8	56.4	62.0	54.8	48.1	38.2	31.2	26.2	22.3	19.4	17.0	*14.2*	*0*	
25	1.03	2.34	4.37	8.16	11.8	15.2	21.9	28.4	34.7	40.9	47.0	53.0	59.0	64.8	58.2	51.1	40.6	33.2	27.8	23.8	20.6	*18.1*	*15.1*	*0*	
26	1.07	2.45	4.56	8.52	12.3	15.9	22.9	29.7	36.2	42.7	49.1	55.3	61.5	67.6	61.8	54.2	43.0	35.2	29.5	25.2	21.8	*19.2*	*16.1*	*0*	
28	1.16	2.65	4.94	9.23	13.3	17.2	24.8	32.1	39.3	46.3	53.2	59.9	66.7	73.3	69.0	60.6	48.1	39.4	33.0	28.2	24.4	*21.4*	*0*		
30	1.25	2.85	5.33	9.94	14.3	18.5	26.7	34.6	42.3	49.9	57.3	64.6	71.8	78.9	76.6	67.2	53.3	43.6	36.6	31.2	27.1	*23.8*	*0*		
32	1.34	3.06	5.71	10.7	15.3	19.9	28.6	37.1	45.4	53.5	61.4	69.2	77.0	84.6	84.3	74.0	58.7	48.1	40.3	34.4	*29.8*	*26.2*	*0*		
35	1.48	3.37	6.29	11.7	16.9	21.9	31.6	40.9	50.0	58.9	67.6	76.3	84.8	93.3	96.5	84.7	67.2	55.0	46.1	39.4	*34.1*	*0*			
40	1.71	3.89	7.27	13.6	19.5	25.3	36.4	47.2	57.7	68.0	78.1	88.1	99.0	108	117	103	82.1	67.2	*56.3*	*48.1*	*20.0*	*0*			
45	1.94	4.42	8.25	15.4	22.2	28.7	41.4	53.6	65.6	77.2	88.7	100	111	122	133	123	98.0	80.2	*67.2*	*54.1*	*0*				
	Type A			Type B					Type C																

Type A: Manual or drip lubrication
Type B: Bath or disc lubrication
Type C: Oil stream lubrication

GENERAL NOTES:

(a) The limiting RPM for each lubrication type is read from the column to the left of the boundary line shown.

(b) The horsepower ratings of multiple strand chains are greater than those of single strand chain. See Table A2 for multiple strand factors.

(c) See para. A1.4 for a detailed description of lubrication types.

(d) For optimum results, it is recommended that the roller chain manufacturer be given the opportunity to evaluate the conditions of operation of chains in the italicized (galling range) speed area.

Not for Resale

Copyright ASME International
Provided by IHS under license with ASME
No reproduction or networking permitted without license from IHS

Table A11 Horsepower Ratings, Standard Single Strand Roller Chain — No. 100

No. of Teeth in Small Sprkt.	1¼ in. Pitch Revolutions Per Minute — Small Sprocket																								
	10	25	50	100	150	200	300	400	500	600	700	800	900	1000	1100	1200	1300	1400	1600	1800	2000	2200	2400	2600	2700
11	0.81	1.85	3.45	6.44	9.28	12.0	17.3	22.4	27.4	32.3	37.1	32.8	27.5	23.4	20.3	17.8	15.8	14.2	11.6	9.71	*8.29*	*7.19*	*6.31*	*1.29*	*0*
12	0.89	2.03	3.79	7.08	10.2	13.2	19.0	24.6	30.1	35.5	40.8	37.3	31.3	26.7	23.2	20.3	18.0	16.1	13.2	11.1	*9.45*	*8.19*	*7.19*	*0*	
13	0.97	2.22	4.13	7.72	11.1	14.4	20.7	26.9	32.8	38.7	44.5	42.1	35.3	30.1	26.1	22.9	20.3	18.2	14.9	12.5	*10.6*	*9.23*	*8.10*	*0*	
14	1.05	2.40	4.48	8.36	12.0	15.6	22.5	29.1	35.6	41.9	48.2	47.0	39.4	33.7	29.2	25.6	22.7	20.3	16.6	13.9	*11.9*	*10.3*	*9.05*	*0*	
15	1.13	2.59	4.83	9.01	13.0	16.8	24.2	31.4	38.3	45.2	51.9	52.2	43.7	37.3	32.4	28.4	25.2	22.5	18.4	15.5	*13.2*	*11.4*	*10.0*	*0*	
16	1.22	2.77	5.17	9.66	13.9	18.0	26.0	33.6	41.1	48.4	55.6	57.5	48.2	41.1	35.7	31.3	27.7	24.8	20.3	17.0	*14.5*	*12.6*	*11.1*	*0*	
17	1.30	2.96	5.52	10.3	14.8	19.2	27.7	35.9	43.9	51.7	59.4	63.0	52.8	45.0	39.0	34.3	30.4	27.2	22.3	*18.7*	*15.9*	*13.8*	*0.79*	*0*	
18	1.38	3.15	5.88	11.0	15.8	20.5	29.5	38.2	46.7	55.0	63.2	68.6	57.5	49.1	42.5	37.3	33.1	29.6	24.2	*20.3*	*17.4*	*15.0*	*0*		
19	1.46	3.34	6.23	11.6	16.7	21.7	31.2	40.5	49.5	58.3	67.0	74.4	62.3	53.2	46.1	40.5	35.9	32.1	26.3	*22.0*	*18.8*	*16.3*	*0*		
20	1.55	3.53	6.58	12.3	17.7	22.9	33.0	42.8	52.3	61.6	70.8	79.8	67.3	57.5	49.8	43.7	38.8	34.7	28.4	*23.8*	*20.3*	*17.6*	*0*		
21	1.63	3.72	6.94	13.0	18.7	24.2	34.8	45.1	55.1	65.0	74.6	84.2	72.4	61.8	53.6	47.0	41.7	37.3	30.6	*25.6*	*21.9*	*19.0*	*0*		
22	1.71	3.91	7.30	13.6	19.6	25.4	36.6	47.4	58.0	68.3	78.5	88.5	77.7	66.3	57.5	50.4	44.7	40.0	32.8	*27.5*	*23.4*	*20.3*	*0*		
23	1.80	4.10	7.66	14.3	20.6	26.7	38.4	49.8	60.8	71.7	82.3	92.8	83.0	70.9	61.4	53.9	47.8	42.8	35.0	*29.4*	*25.1*	*7.74*	*0*		
24	1.88	4.30	8.02	15.0	21.5	27.9	40.2	52.1	63.7	75.0	86.2	97.2	88.5	75.6	65.5	57.5	51.0	45.6	37.3	*31.3*	*26.7*	*0*			
25	1.97	4.49	8.38	15.6	22.5	29.2	42.0	54.4	66.6	78.4	90.1	102	94.1	80.3	69.6	61.1	54.2	48.5	*39.7*	*33.3*	*28.4*	*0*			
26	2.05	4.68	8.74	16.3	23.5	30.4	43.8	56.8	69.4	81.8	94.0	106	99.8	85.2	73.8	64.8	57.5	51.4	*42.1*	*35.3*	*30.1*	*0*			
28	2.22	5.07	9.47	17.7	25.5	33.0	47.5	61.5	75.2	88.6	102	115	112	95.2	82.5	72.4	64.2	57.5	*47.0*	*39.4*	*33.7*	*0*			
30	2.40	5.47	10.2	19.0	27.4	35.5	51.2	66.3	81.0	95.5	110	124	124	106	91.5	80.3	71.2	63.7	*52.2*	*43.7*	*10.0*	*0*			
32	2.57	5.86	10.9	20.4	29.4	38.1	54.9	71.1	86.9	102	118	133	136	116	101	88.5	78.5	70.2	*57.5*	*45.2*	*0*				
35	2.83	6.46	12.0	22.5	32.4	42.0	60.4	78.3	95.7	113	130	146	156	133	115	101	*89.8*	*80.3*	*65.8*	*55.1*	*0*				
40	3.27	7.46	13.9	26.0	37.4	48.5	69.8	90.4	111	130	150	169	188	163	141	124	*110*	*98.1*	*80.3*	*0*					
45	3.71	8.47	15.8	29.5	42.5	55.0	79.3	103	126	148	170	192	213	194	*168*	*148*	*131*	*117*	*45.3*	*0*					
	Type A			Type B			Type C																		

Type A: Manual or drip lubrication
Type B: Bath or disc lubrication
Type C: Oil stream lubrication

GENERAL NOTES:

(a) The limiting RPM for each lubrication type is read from the column to the left of the boundary line shown.

(b) The horsepower ratings of multiple strand chains are greater than those of single strand chain. See Table A2 for multiple strand factors.

(c) See para. A1.4 for a detailed description of lubrication types.

(d) For optimum results, it is recommended that the roller chain manufacturer be given the opportunity to evaluate the conditions of operation of chains in the italicized (galling range) speed area.

Not for Resale

Copyright ASME International
Provided by IHS under license with ASME
No reproduction or networking permitted without license from IHS

Table A12 Horsepower Ratings, Standard Single Strand Roller Chain — No. 120

No. of Teeth in Small Spkt.	1½ in. Pitch Revolutions Per Minute — Small Sprocket																								
	10	25	50	100	150	200	300	400	500	600	700	800	900	1000	1100	1200	1300	1400	1500	1600	1700	1800	1900	2000	2100
11	1.37	3.12	5.83	10.9	15.7	20.3	29.2	37.9	46.3	54.6	46.3	37.9	31.8	27.1	23.5	20.6	18.3	16.4	14.8	*13.4*	*12.2*	*11.2*	*10.4*	*9.59*	*0*
12	1.50	3.43	6.40	11.9	17.2	22.3	32.1	41.6	50.9	59.9	52.8	43.2	36.2	30.9	26.8	23.5	20.9	18.7	16.8	*15.3*	*13.9*	*12.8*	*11.8*	*10.9*	*0*
13	1.64	3.74	6.98	13.0	18.8	24.3	35.0	45.4	55.5	65.3	59.5	48.7	40.8	34.9	30.2	26.5	23.5	21.0	19.0	*17.2*	*15.7*	*14.4*	*13.3*	*12.3*	*0*
14	1.78	4.05	7.56	14.1	20.3	26.3	37.9	49.1	60.1	70.8	66.5	54.4	45.6	39.0	33.8	29.6	26.3	23.5	*21.2*	*19.2*	*17.6*	*16.1*	*14.9*	*8.94*	*0*
15	1.91	4.37	8.15	15.2	21.9	28.4	40.9	53.0	64.7	76.3	73.8	60.4	50.6	43.2	37.4	32.9	29.1	26.1	*23.5*	*21.3*	*19.5*	*17.9*	*16.5*	*0*	
16	2.05	4.68	8.74	16.3	23.5	30.4	43.8	56.8	69.4	81.8	81.3	66.5	55.7	47.6	41.2	36.2	32.1	28.7	*25.9*	*23.5*	*21.5*	*19.7*	*18.2*	*0*	
17	2.19	5.00	9.33	17.4	25.1	32.5	46.8	60.6	74.1	87.3	89.0	72.8	61.0	52.1	45.2	39.6	35.2	31.5	*28.4*	*25.8*	*23.5*	*21.6*	*19.9*	*0*	
18	2.33	5.32	9.92	18.5	26.7	34.6	49.8	64.5	78.8	92.9	97.0	79.4	66.5	56.8	49.2	43.2	38.3	*34.3*	*30.9*	*28.1*	*25.6*	*23.5*	*11.3*	*0*	
19	2.47	5.64	10.5	19.6	28.3	36.6	52.8	68.4	83.6	98.5	105	86.1	72.1	61.6	53.4	46.8	41.5	*37.2*	*33.5*	*30.4*	*27.8*	*25.5*	*0*		
20	2.61	5.96	11.1	20.7	29.9	38.7	55.8	72.7	88.3	104	114	92.9	77.9	66.5	57.6	50.6	44.9	*40.1*	*36.2*	*32.9*	*30.0*	*27.5*	*0*		
21	2.75	6.28	11.7	21.9	31.5	40.8	58.8	76.2	93.1	110	122	100	83.8	71.6	62.0	54.4	48.3	*43.2*	*39.0*	*35.4*	*32.3*	*29.6*	*0*		
22	2.90	6.60	12.3	23.0	33.1	42.9	61.8	80.1	97.9	115	131	107	89.9	76.7	66.5	58.4	51.8	*46.3*	*41.8*	*37.9*	*34.6*	*16.6*	*0*		
23	3.04	6.93	12.9	24.1	34.8	45.0	64.9	84.0	103	121	139	115	96.1	82.0	71.1	62.4	*55.3*	*49.5*	*44.6*	*40.5*	*37.0*	*0*			
24	3.18	7.25	13.5	25.3	36.4	47.1	67.9	88.0	108	127	146	122	102	87.4	75.8	66.5	*59.0*	*52.8*	*47.6*	*43.2*	*39.4*	*0*			
25	3.32	7.58	14.1	26.4	38.0	49.3	71.0	91.9	112	132	152	130	109	92.9	80.6	70.7	*62.7*	*56.1*	*50.6*	*45.9*	*41.3*	*0*			
26	3.47	7.91	14.8	27.5	39.7	51.4	74.0	95.9	117	138	159	138	115	98.6	85.4	75.0	*66.5*	*59.5*	*53.7*	*48.7*	*26.6*	*0*			
28	3.76	8.57	16.0	29.8	43.0	55.7	80.2	104	127	150	172	154	129	110	95.5	*83.8*	*74.3*	*66.5*	*60.0*	*54.4*	*0*				
30	4.05	9.23	17.2	32.1	46.3	60.0	86.4	112	137	161	185	171	143	122	106	*92.9*	*82.4*	*73.8*	*66.5*	*42.4*	*0*				
32	4.34	9.90	18.5	34.5	49.6	64.3	92.6	120	147	173	199	188	158	135	*117*	*102*	*90.8*	*81.3*	*73.3*	*0*					
35	4.78	10.9	20.3	38.0	54.7	70.9	102	132	162	190	219	215	180	154	*133*	*117*	*104*	*92.9*	*47.7*	*0*					
40	5.52	12.6	23.5	43.9	63.2	81.8	118	153	187	220	253	*263*	*220*	*188*	*163*	*143*	*127*	*59.5*	*0*						
45	6.27	14.3	26.7	49.8	71.7	92.9	134	173	212	250	287	*314*	*263*	*224*	*195*	*171*	*80.0*	*0*							
Type A		**Type B**					**Type C**																		

Type A: Manual or drip lubrication
Type B: Bath or disc lubrication
Type C: Oil stream lubrication

GENERAL NOTES:

(a) The limiting RPM for each lubrication type is read from the column to the left of the boundary line shown.

(b) The horsepower ratings of multiple strand chains are greater than those of single strand chain. See Table A2 for multiple strand factors.

(c) See para. A1.4 for a detailed description of lubrication types.

(d) For optimum results, it is recommended that the roller chain manufacturer be given the opportunity to evaluate the conditions of operation of chains in the italicized (galling range) speed area.

Not for Resale

Copyright ASME International
Provided by IHS under license with ASME
No reproduction or networking permitted without license from IHS

Table A13 Horsepower Ratings, Standard Single Strand Roller Chain — No. 140

No. of Teeth in Small Sprkt.	1¾ in. Pitch Revolutions Per Minute — Small Sprocket																								
	10	25	50	100	150	200	250	300	350	400	450	500	550	600	700	800	900	1000	1100	1200	1300	1400	1500	1600	1700
11	2.12	4.83	9.02	16.8	24.2	31.4	38.4	45.2	52.0	58.6	65.2	71.6	75.2	66.0	52.4	42.9	35.9	30.7	26.6	*23.3*	*20.7*	*18.5*	*16.7*	*15.2*	*0*
12	2.33	5.31	9.91	18.5	26.6	34.5	42.2	49.7	57.1	64.4	71.6	78.7	85.7	75.2	59.7	48.9	41.0	35.0	30.3	*26.6*	*23.6*	*21.1*	*19.0*	*17.3*	*0*
13	2.54	5.79	10.8	20.2	29.0	37.6	46.0	54.2	62.2	70.2	78.0	85.8	93.5	84.8	67.3	55.1	46.2	39.4	34.2	*30.0*	*26.6*	*23.8*	*21.5*	*19.5*	*0*
14	2.75	6.27	11.7	21.8	31.5	40.8	49.8	58.7	67.4	76.0	84.5	93.0	101	94.8	75.2	61.6	51.6	44.1	38.2	*33.5*	*29.7*	*26.6*	*24.0*	*21.8*	
15	2.96	6.76	12.6	23.5	33.9	43.9	53.7	63.2	72.7	81.9	91.1	100	109	105	83.4	68.3	57.2	48.9	*42.4*	*37.2*	*33.0*	*29.5*	*26.6*	*0*	
16	3.18	7.24	13.5	25.2	36.3	47.1	57.5	67.8	77.9	87.8	97.7	107	117	116	91.9	75.2	63.1	53.8	*46.7*	*41.0*	*36.3*	*32.5*	*29.3*	*0*	
17	3.39	7.73	14.4	26.9	38.8	50.3	61.4	72.4	83.2	93.8	104	115	125	127	101	82.4	69.1	59.0	*51.1*	*44.9*	*39.8*	*35.6*	*32.1*	*0*	
18	3.61	8.23	15.4	28.6	41.3	53.5	65.3	77.0	88.5	99.8	111	122	133	138	110	89.8	75.2	64.2	*55.7*	*48.9*	*43.3*	*38.8*	*35.0*	*0*	
19	3.82	8.72	16.3	30.4	43.7	56.7	69.3	81.6	93.8	106	118	129	141	150	119	97.4	81.6	69.7	*60.4*	*53.0*	*47.0*	*42.1*	*37.9*	*0*	
20	4.04	9.22	17.2	32.1	46.2	59.9	73.2	86.3	99.1	112	124	137	149	161	128	105	88.1	75.2	*65.2*	*57.2*	*50.8*	*45.4*	*0*		
21	4.26	9.72	18.1	33.8	48.7	63.1	77.2	91.0	104	118	131	144	157	170	138	113	94.8	*80.9*	*70.2*	*61.6*	*54.6*	*48.9*	*0*		
22	4.48	10.2	19.1	35.6	51.3	66.4	81.2	95.6	110	124	138	151	165	178	148	121	102	*86.8*	*75.2*	*66.0*	*58.6*	*52.4*	*0*		
23	4.70	10.7	20.0	37.3	53.8	69.7	85.2	100	115	130	145	159	173	187	158	130	109	*92.8*	*80.4*	*70.6*	*62.6*	*56.0*	*0*		
24	4.92	11.2	20.9	39.1	56.3	72.9	89.2	105	121	136	151	166	181	196	169	138	116	*98.9*	*85.7*	*75.2*	*66.7*	*59.7*	*0*		
25	5.14	11.7	21.9	40.8	58.8	76.2	93.2	110	126	142	158	174	189	205	180	147	*123*	*105*	*91.1*	*80.0*	*70.9*	*63.5*	*0*		
26	5.37	12.2	22.8	42.6	61.4	79.5	97.2	115	132	148	165	181	198	214	190	156	*131*	*112*	*96.7*	*84.8*	*75.2*	*0*			
28	5.81	13.3	24.7	46.2	66.5	86.2	105	124	143	161	179	197	214	232	213	174	*146*	*125*	*108*	*94.8*	*84.1*	*0*			
30	6.26	14.3	26.7	49.7	71.6	92.8	113	134	154	173	193	212	231	249	236	*193*	*162*	*138*	*120*	*105*	*93.2*	*0*			
32	6.71	15.3	28.6	53.3	76.8	99.5	122	143	165	186	206	227	247	267	*260*	*213*	*178*	*152*	*132*	*116*	*0*				
35	7.40	16.9	31.5	58.7	84.6	110	134	158	181	205	227	250	272	295	*297*	*243*	*204*	*174*	*151*	*130*	*0*				
40	8.54	19.5	36.4	67.9	97.7	127	155	182	210	236	263	289	315	*340*	*363*	*297*	*249*	*213*	*178*	*0*					
45	9.70	22.1	41.3	77.1	111	144	176	207	238	268	298	328	357	*387*	*434*	*355*	*297*	*237*	*92.7*	*0*					
Type A		Type B				Type C																			

Type A: Manual or drip lubrication
Type B: Bath or disc lubrication
Type C: Oil stream lubrication

GENERAL NOTES:

(a) The limiting RPM for each lubrication type is read from the column to the left of the boundary line shown.

(b) The horsepower ratings of multiple strand chains are greater than those of single strand chain. See Table A2 for multiple strand factors.

(c) See para. A1.4 for a detailed description of lubrication types.

(d) For optimum results, it is recommended that the roller chain manufacturer be given the opportunity to evaluate the conditions of operation of chains in the italicized (galling range) speed area.

Not for Resale

Copyright ASME International
Provided by IHS under license with ASME
No reproduction or networking permitted without license from IHS

Table A14 Horsepower Ratings, Standard Single Strand Roller Chain — No. 160

No. of Teeth in Small Spkt.	2 in. Pitch Revolutions Per Minute — Small Sprocket																								
	10	25	50	100	150	200	250	300	350	400	450	500	550	600	650	700	750	800	850	900	1000	1100	1200	1300	1400
11	3.07	7.01	13.1	24.4	35.2	45.6	55.7	65.6	75.4	85.0	94.5	96.6	83.7	73.5	65.2	58.3	52.6	47.7	43.6	*40.0*	*34.1*	*29.6*	*26.0*	*23.0*	0
12	3.38	7.70	14.4	26.8	38.6	50.1	61.2	72.1	82.8	93.4	104	110	95.4	83.7	74.2	66.4	59.9	54.4	49.6	*45.6*	*38.9*	*33.7*	*29.6*	*26.3*	0
13	3.68	8.40	15.7	29.2	42.1	54.6	66.7	78.6	90.3	102	113	124	108	94.4	83.7	74.9	67.5	61.3	56.0	*51.4*	*43.9*	*38.0*	*33.4*	*29.6*	0
14	3.99	9.10	17.0	31.7	45.6	59.1	72.3	85.2	97.8	110	123	135	120	105	93.6	83.7	75.5	68.5	*62.6*	*57.4*	*49.0*	*42.5*	*37.3*	*33.1*	0
15	4.30	9.80	18.3	34.1	49.2	63.7	77.9	91.7	105	119	132	145	133	117	104	92.8	83.7	76.0	*69.4*	*63.7*	*54.4*	*47.1*	*41.4*	0	
16	4.61	10.5	19.6	36.6	52.7	68.3	83.5	98.4	113	127	142	156	147	129	114	102	92.2	*83.7*	*76.4*	*70.2*	*59.9*	*51.9*	*45.6*	0	
17	4.92	11.2	20.9	39.1	56.3	72.9	89.1	105	121	136	151	166	161	141	125	112	101	*91.7*	*83.7*	*76.8*	*65.6*	*56.9*	*49.9*	0	
18	5.23	11.9	22.3	41.6	59.9	77.6	94.8	112	128	145	161	177	175	154	136	122	*110*	*99.9*	*91.2*	*83.7*	*71.5*	*62.0*	*54.4*	0	
19	5.55	12.7	23.6	44.1	63.5	82.2	101	118	136	153	171	188	190	167	148	132	*119*	*108*	*98.9*	*90.8*	*77.5*	*67.2*	*59.0*	0	
20	5.86	13.4	25.0	46.6	67.1	86.9	106	125	144	162	180	198	205	180	160	*143*	*129*	*117*	*107*	*98.1*	*83.7*	*72.6*	*63.7*	0	
21	6.18	14.1	26.3	49.1	70.7	91.6	112	132	152	171	190	209	221	194	172	*154*	*139*	*126*	*115*	*105*	*90.1*	*78.1*	*68.5*	0	
22	6.50	14.8	27.7	51.6	74.4	96.3	118	139	159	180	200	220	*237*	*208*	*184*	*165*	*149*	*135*	*123*	*113*	*96.6*	*83.7*	0		
23	6.82	15.6	29.0	54.2	78.0	101	124	146	167	189	210	231	*251*	*222*	*197*	*176*	*159*	*144*	*132*	*121*	*103*	*89.5*	0		
24	7.14	16.3	30.4	56.7	81.7	106	129	152	175	197	220	241	*263*	*237*	*210*	*188*	*169*	*154*	*140*	*129*	*110*	*95.4*	0		
25	7.46	17.0	31.8	59.3	85.4	111	135	159	183	206	229	252	*275*	*252*	*223*	*200*	*180*	*164*	*149*	*137*	*117*	*101*	0		
26	7.78	17.8	33.1	61.8	89.1	115	141	166	191	215	239	263	*287*	*267*	*237*	*212*	*191*	*173*	*158*	*145*	*124*	*108*	0		
28	8.43	19.2	35.9	67.0	96.5	125	153	180	207	233	259	285	*311*	*298*	*265*	*237*	*214*	*194*	*177*	*162*	*139*	*120*	0		
30	9.08	20.7	38.7	72.2	104	135	165	194	223	251	279	*307*	*336*	*331*	*293*	*263*	*237*	*215*	*196*	*180*	*154*	0			
32	9.74	22.2	41.5	77.4	111	144	176	208	239	269	300	*329*	*359*	*365*	*323*	*289*	*261*	*237*	*216*	*198*	*169*	0			
35	10.7	24.5	45.7	85.2	123	159	194	229	263	297	330	*363*	*395*	*417*	*370*	*331*	*298*	*271*	*247*	*227*	*180*	0			
40	12.4	28.3	52.8	98.5	142	184	225	265	304	343	*381*	*419*	*457*	*494*	*452*	*404*	*365*	*331*	*302*	*257*	0				
45	14.1	32.1	59.9	112	161	209	255	301	345	*389*	*433*	*476*	*519*	*561*	*539*	*482*	*418*	*348*	*271*	*189*	0				
Type A		Type B			Type C																				

Type A: Manual or drip lubrication
Type B: Bath or disc lubrication
Type C: Oil stream lubrication

GENERAL NOTES:

(a) The limiting RPM for each lubrication type is read from the column to the left of the boundary line shown.

(b) The horsepower ratings of multiple strand chains are greater than those of single strand chain. See Table A2 for multiple strand factors.

(c) See para. A1.4 for a detailed description of lubrication types.

(d) For optimum results, it is recommended that the roller chain manufacturer be given the opportunity to evaluate the conditions of operation of chains in the italicized (galling range) speed area.

Not for Resale

Copyright ASME International
Provided by IHS under license with ASME
No reproduction or networking permitted without license from IHS

Table A15 Horsepower Ratings, Standard Single Strand Roller Chain — No. 180

No. of Teeth in Small Sprkt.	2¼ in. Pitch Revolutions Per Minute — Small Sprocket																								
	10	25	50	100	150	200	250	300	350	400	450	500	550	600	650	700	750	800	850	900	950	1000	1050	1100	1150
11	4.24	9.68	18.1	33.7	48.6	62.9	76.9	90.6	104	117	124	106	92.0	80.7	71.6	*64.1*	*57.8*	*52.4*	*47.9*	*46.9*	*40.5*	*37.5*	*34.9*	*32.5*	*0*
12	4.66	10.6	19.8	37.0	53.4	69.1	84.5	99.6	114	129	142	121	105	92.0	*81.6*	*73.0*	*65.8*	*59.7*	*54.6*	*50.1*	*46.2*	*42.8*	*39.7*	*37.1*	*0*
13	5.08	11.6	21.6	40.4	58.2	75.4	92.1	109	125	141	156	136	118	*104*	*92.0*	*82.3*	*74.2*	*67.4*	*61.5*	*56.5*	*52.1*	*48.2*	*44.8*	*0*	
14	5.51	12.6	23.4	43.7	63.0	81.6	99.8	118	135	152	*169*	*152*	*132*	*116*	*103*	*92.0*	*82.9*	*75.3*	*68.7*	*63.1*	*58.2*	*53.9*	*50.1*	*0*	
15	5.93	13.5	25.3	47.1	67.9	88.0	108	127	146	164	*182*	*169*	*146*	*129*	*114*	*102*	*92.0*	*83.5*	*76.2*	*70.0*	*64.5*	*59.7*	*55.5*	*0*	
16	6.36	14.5	27.1	50.5	72.8	94.3	115	136	156	176	*196*	*186*	*161*	*142*	*126*	*112*	*101*	*92.0*	*84.0*	*77.1*	*71.1*	*65.8*	*61.2*	*0*	
17	6.79	15.5	28.9	54.0	77.7	101	123	145	167	188	*209*	*204*	*177*	*155*	*138*	*123*	*111*	*101*	*92.0*	*84.4*	*77.9*	*72.1*	*0*		
18	7.22	16.5	30.8	57.4	82.7	107	131	154	177	200	*222*	*222*	*193*	*169*	*150*	*134*	*121*	*110*	*100*	*92.0*	*84.8*	*78.5*	*0*		
19	7.66	17.5	32.6	60.8	87.6	114	139	164	188	212	*236*	*241*	*209*	*183*	*163*	*145*	*131*	*119*	*109*	*99.8*	*92.0*	*85.2*	*0*		
20	8.10	18.5	34.5	64.3	92.6	120	147	173	199	224	*249*	*260*	*226*	*198*	*176*	*157*	*142*	*129*	*117*	*108*	*99.3*	*92.0*	*0*		
21	8.53	19.5	36.3	67.8	97.6	126	155	182	209	236	*262*	*280*	*243*	*213*	*189*	*169*	*152*	*138*	*126*	*116*	*107*	*99.0*	*0*		
22	8.97	20.5	38.2	71.3	103	133	163	192	220	*248*	*276*	*300*	*260*	*228*	*203*	*181*	*163*	*148*	*135*	*124*	*115*	*0*			
23	9.41	21.5	40.1	74.8	108	140	171	201	231	*260*	*290*	*318*	*278*	*244*	*216*	*194*	*175*	*159*	*145*	*133*	*123*	*0*			
24	9.86	22.5	42.0	78.3	113	146	179	210	242	*273*	*303*	*333*	*296*	*260*	*231*	*206*	*186*	*169*	*154*	*142*	*131*	*0*			
25	10.3	23.5	43.9	81.8	118	153	187	220	253	*285*	*317*	*348*	*315*	*277*	*245*	*220*	*198*	*180*	*164*	*151*	*139*	*0*			
26	10.7	24.5	45.7	85.4	123	159	195	229	264	*297*	*331*	*363*	*334*	*293*	*260*	*233*	*210*	*191*	*174*	*160*	*0*				
28	11.6	26.6	49.6	92.5	133	173	211	249	286	*322*	*358*	*394*	*374*	*328*	*291*	*260*	*235*	*213*	*194*	*178*	*0*				
30	12.5	28.6	53.4	99.6	144	186	227	268	308	*347*	*386*	*424*	*414*	*364*	*322*	*289*	*260*	*236*	*216*	*198*	*0*				
32	13.4	30.7	57.2	107	154	199	244	287	*330*	*372*	*414*	*455*	*456*	*401*	*355*	*318*	*287*	*260*	*238*	*0*					
35	14.8	33.8	63.1	118	170	220	268	316	*363*	*410*	*456*	*501*	*522*	*458*	*406*	*364*	*328*	*291*	*220*	*0*					
40	17.1	39.0	72.9	136	196	254	310	365	*420*	*473*	*526*	*579*	*575*	*524*	*465*	*398*	*324*	*244*	*0*						
45	19.4	44.3	82.7	154	222	288	352	*415*	*477*	*538*	*598*	*631*	*578*	*514*	*441*	*360*	*271*	*0*							
Type A		**Type B**														**Type C**									

Type A: Manual or drip lubrication
Type B: Bath or disc lubrication
Type C: Oil stream lubrication

GENERAL NOTES:

(a) The limiting RPM for each lubrication type is read from the column to the left of the boundary line shown.

(b) The horsepower ratings of multiple strand chains are greater than those of single strand chain. See Table A2 for multiple strand factors.

(c) See para. A1.4 for a detailed description of lubrication types.

(d) For optimum results, it is recommended that the roller chain manufacturer be given the opportunity to evaluate the conditions of operation of chains in the italicized (galling range) speed area.

Not for Resale

Copyright ASME International
Provided by IHS under license with ASME
No reproduction or networking permitted without license from IHS

Table A16 Horsepower Ratings, Standard Single Strand Roller Chain — No. 200

No. of Teeth in Small Sprkt.	2½ in. Pitch Revolutions Per Minute — Small Sprocket																			
	10	15	20	30	40	50	70	100	150	200	250	300	350	400	450	500	550	600	650	700
11	5.64	8.12	10.5	15.1	19.6	24.0	32.5	44.8	64.5	83.5	102	120	*138*	*156*	*135*	*115*	*100*	*87.8*	*77.9*	*0*
12	6.19	8.92	11.6	16.6	21.6	26.4	35.7	49.2	70.8	91.8	112	132	*152*	*171*	*154*	*132*	*114*	*100*	*0*	
13	6.75	9.72	12.6	18.1	23.5	28.7	38.9	53.6	77.2	100	122	144	*166*	*187*	*174*	*148*	*129*	*113*	*0*	
14	7.31	10.5	13.6	19.7	25.5	31.1	42.1	58.1	83.7	108	132	156	*179*	*202*	*194*	*166*	*144*	*126*	*0*	
15	7.88	11.3	14.7	21.2	27.4	33.5	45.4	62.6	90.1	117	143	168	*193*	*218*	*215*	*184*	*159*	*140*	*0*	
16	8.45	12.2	15.8	22.7	29.4	36.0	48.7	67.1	96.6	125	153	180	*207*	*234*	*237*	*203*	*176*	*154*	*0*	
17	9.02	13.0	16.8	24.2	31.4	38.4	52.0	71.6	103	134	163	*193*	*221*	*249*	*260*	*222*	*192*	*169*	*0*	
18	9.59	13.8	17.9	25.8	33.4	40.8	55.3	76.2	110	142	174	*205*	*235*	*265*	*283*	*242*	*209*	*184*	*0*	
19	10.2	14.6	19.0	27.3	35.4	43.3	58.6	80.8	116	151	184	*217*	*249*	*281*	*307*	*262*	*227*	*199*	*0*	
20	10.7	15.5	20.1	28.9	37.4	45.8	61.9	85.4	123	159	195	*229*	*264*	*297*	*331*	*283*	*245*	*0*		
21	11.3	16.3	21.1	30.5	39.5	48.2	65.3	90.0	130	168	205	*242*	*278*	*313*	*348*	*305*	*264*	*0*		
22	11.9	17.2	22.2	32.0	41.5	50.7	68.7	94.6	136	177	216	*254*	*292*	*330*	*366*	*327*	*283*	*0*		
23	12.5	18.0	23.3	33.6	43.5	53.2	72.0	99.3	143	185	226	*267*	*307*	*346*	*384*	*349*	*303*	*0*		
24	13.1	18.9	24.4	35.2	45.6	55.7	75.4	104	150	194	237	*279*	*321*	*362*	*402*	*372*	*323*	*0*		
25	13.7	19.7	25.5	36.8	47.6	58.2	78.8	109	156	203	248	*292*	*335*	*378*	*421*	*396*	*343*	*0*		
26	14.3	20.6	26.6	38.4	49.7	60.7	82.2	113	163	212	259	*305*	*350*	*395*	*439*	*420*	*364*	*0*		
	Type A		Type B							Type C										

Type A: Manual or drip lubrication
Type B: Bath or disc lubrication
Type C: Oil stream lubrication

GENERAL NOTES:

(a) The limiting RPM for each lubrication type is read from the column to the left of the boundary line shown.

(b) The horsepower ratings of multiple strand chains are greater than those of single strand chain. See Table A2 for multiple strand factors.

(c) See para. A1.4 for a detailed description of lubrication types.

(d) For optimum results, it is recommended that the roller chain manufacturer be given the opportunity to evaluate the conditions of operation of chains in the italicized (galling range) speed area.

Not for Resale

Copyright ASME International
Provided by IHS under license with ASME
No reproduction or networking permitted without license from IHS

Table A17 Horsepower Ratings, Standard Single Strand Roller Chain — No. 240

No. of Teeth in Small Spkt.	3 in. Pitch Revolutions Per Minute — Small Sprocket																				
	5	10	15	20	25	30	40	50	60	80	100	125	150	175	200	250	300	350	400	450	500
11	4.86	9.08	13.1	16.9	20.7	24.4	31.6	38.6	45.5	59.0	72.1	88.1	104	119	*135*	*164*	*194*	*223*	*187*	*156*	*0*
12	5.34	9.97	14.4	18.6	22.7	26.8	34.7	42.4	50.0	64.8	79.2	96.8	114	131	*148*	*181*	*213*	*245*	*213*	*0*	
13	5.83	10.9	15.7	20.3	24.8	29.2	37.9	46.3	54.5	70.6	86.4	106	124	*143*	*161*	*197*	*232*	*267*	*240*	*0*	
14	6.31	11.8	17.0	22.0	26.9	31.7	41.0	50.1	59.1	76.5	93.6	114	135	*155*	*175*	*213*	*251*	*289*	*268*	*0*	
15	6.80	12.7	18.3	23.7	28.9	34.1	44.2	54.0	63.6	82.4	101	123	145	*167*	*188*	*230*	*271*	*311*	*297*	*0*	
16	7.29	13.6	19.6	25.4	31.0	36.6	47.4	57.9	68.2	88.4	108	132	156	*179*	*202*	*247*	*290*	*334*	*328*	*0*	
17	7.78	14.5	20.9	27.1	33.1	39.0	50.6	61.8	72.9	94.4	115	141	166	*191*	*215*	*263*	*310*	*356*	*359*	*0*	
18	8.28	15.4	22.3	28.8	35.2	41.5	53.8	65.8	77.5	100	123	150	177	*203*	*229*	*280*	*330*	*379*	*377*	*0*	
19	8.78	16.4	23.6	30.6	37.4	44.0	57.0	69.7	82.2	106	130	159	187	*215*	*243*	*297*	*350*	*402*	*393*	*0*	
20	9.28	17.3	24.9	32.3	39.5	46.5	60.3	73.7	86.8	112	138	168	198	*228*	*257*	*314*	*370*	*423*	*407*	*0*	
21	9.78	18.2	26.3	34.1	41.6	49.0	63.5	77.7	91.5	119	145	177	*209*	*240*	*270*	*331*	*390*	*439*	*421*	*0*	
22	10.3	19.2	27.6	35.8	43.8	51.6	66.8	81.7	96.2	125	152	186	*220*	*252*	*284*	*348*	*410*	*454*	*435*	*0*	
23	10.8	20.1	29.0	37.6	45.9	54.1	70.1	85.7	101	131	160	195	*230*	*265*	*298*	*365*	*430*	*469*	*448*	*0*	
24	11.3	21.1	30.4	39.3	48.1	56.7	73.4	89.7	106	137	167	205	*241*	*277*	*312*	*382*	*450*	*483*	*0*		
25	11.8	22.0	31.7	41.1	50.3	59.2	76.7	93.8	110	143	175	214	*252*	*290*	*327*	*399*	*470*	*496*	*0*		
26	12.3	23.0	33.1	42.9	52.4	61.8	80.0	97.8	115	149	183	223	*263*	*302*	*341*	*416*	*491*	*509*	*0*		
	Type A		Type B									Type C									

Type A: Manual or drip lubrication
Type B: Bath or disc lubrication
Type C: Oil stream lubrication

GENERAL NOTES:

(a) The limiting RPM for each lubrication type is read from the column to the left of the boundary line shown.

(b) The horsepower ratings of multiple strand chains are greater than those of single strand chain. See Table A2 for multiple strand factors.

(c) See para. A1.4 for a detailed description of lubrication types.

(d) For optimum results, it is recommended that the roller chain manufacturer be given the opportunity to evaluate the conditions of operation of chains in the italicized (galling range) speed area.

Not for Resale

A2 SPROCKET CUTTING TOOLS

A2.1 Standard Roller Chain Sprocket Cutter Designs

The following three kinds of sprocket cutters are used:

(a) space cutters, of which five will be required to cut 7 or more teeth for any given roller diameter. The ranges of teeth are, respectively, 7–8, 9–11, 12–17, 18–34, and 35 and over. Single-purpose cutters of this type are necessary for fewer than 7 teeth. (See para. A2.2.)

(b) hobs, of which only one will be required if of the nontopping type, to cut any number of teeth for a given pitch and roller diameter. Refer to Fig. A1 for topping hob tooth form.

(c) shaper cutters, for use on gear shaping equipment, of which only one will be required if of the nontopping type, to cut 12 or more teeth for a given pitch and roller diameter. When sprockets of less than 12 teeth are to be produced on gear shaping equipment, consult the cutter manufacturer.

A2.2 Space Cutters

Space cutters are made for the following ranges of teeth: 7–8, 9–11, 12–17, 18–34, and 35 and over. The lowest number of teeth in any group is designated by N_1 and the highest by N_2.

The cutters are based on an intermediate number of teeth N_a equal to $2N_1N_2/(N_1 + N_2)$, but the topping curve radius F is designed to produce adequate tooth height on a sprocket of N_2 teeth. The values of N_a for the cutters are 7.47, 9.9, 14.07, 23.54, and 56.

The angle *Xab* is $180/N$ when the cutter is made for a specific number of teeth. For design of cutters covering a range of teeth, angle *Xab* was determined by layout to assure chain roller clearance and to avoid pointed teeth on the larger sprockets of each range. It has values as given in Table A18A or A18B for cutters covering a range of teeth as here designed. The formulas of Tables A18A and A18B are especially for cutters covering the standard ranges of teeth (N_a = intermediate values from above). For other points, use the value of N_a for N in the standard formulas for standard tooth form.

Mark all space cutters with pitch, roller diameter, and range of teeth to be cut.

A2.3 Hobs

A2.3.1 General. Hobs (see Fig. A1) designed for a given roller diameter D_r and chain pitch P will cut any number of teeth if of the nontopping type. For topping hobs, five will be required to cut seven or more teeth for any given roller diameter (see Tables A20A and A20B). The ranges of teeth are, respectively, 7–8, 9–11, 12–17, 18–34, and 35 and over.

A2.3.2 Marking of Hobs. All hobs are to be marked with chain pitch, roller diameter, lead angle, flute lead, "TOP" if of the topping type or "NONTOP" if of the nontopping type, and the range of teeth cut if of the topping type.

A2.4 Shaper Cutters

Refer to the cutter manufacturer for the cutter form design for cutters to be used in the manufacture of sprockets on gear shaping equipment.

Copyright ASME International
Provided by IHS under license with ASME
No reproduction or networking permitted without license from IHS
Not for Resale

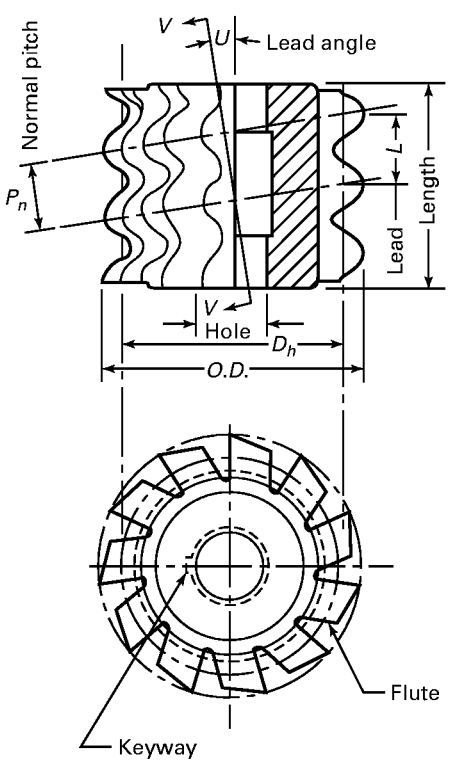

(a) Hob Outline

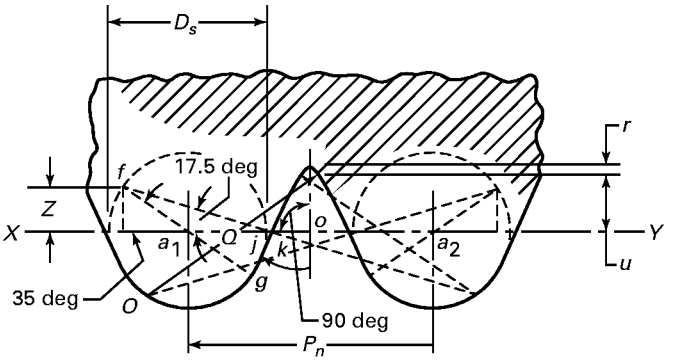

(b) Section V–V of Nontopping Hob

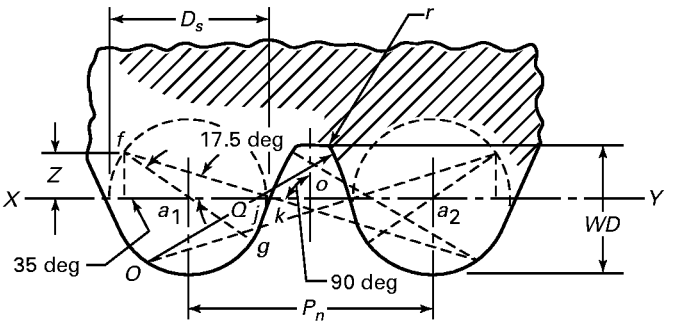

(c) Section V–V of Topping Hob

D_h = $O.D. - D_s$

D_r = roller diameter

D_s = minimum diameter of seating curve
= $1.005D_r + 0.003$, in.

$$F = D_r\left[0.8\cos\left(18\text{ deg} - \frac{56\text{ deg}}{N_a}\right) + 1.4\cos\left(17\text{ deg} + \frac{116\text{ deg}}{N_a} - Xab\right) - 1.3025\right] - 0.0015, \text{ in.}$$

$$L = \text{lead} = \frac{P_n}{\cos U}$$

O = located on line passing through f and j

$O.D.$ = 1.7 (hole + $D_r + 0.7P$) approximately

P = chain pitch

P_n = normal pitch of hob = $1.011P$

Q = found by trial and is tangent to arc kg at k and to fillet radius

$$U = \sin^{-1}\frac{P_n}{\pi D_h}$$

$V = 1.4D_r \sin Xab$

$W = 1.4D_r \cos Xab$

$$WD = \frac{D_r}{2} + P\left(0.3 - \frac{\tan\frac{90\text{ deg}}{N_a}}{2}\right)$$

$Z = 0.287D_s$

$a_1o = oa_2 = P_n/2$

f = radius center for arc gk

j = point of intersection of line XY with circle of diameter D_s

r = radius of fillet circle = $0.03P$

$u = 0.27P$

$$yz = D_r\left[1.4\sin\left(17\text{ deg} + \frac{116\text{ deg}}{N_a} - Xab\right) - 0.8\sin\left(18\text{ deg} - \frac{56\text{ deg}}{N_a}\right)\right]$$

length = not less than two times bore, or $6D_r$, or $3.2P$

Fig. A1 Hob Outline and Tooth Form

Copyright ASME International
Provided by IHS under license with ASME
No reproduction or networking permitted without license from IHS
Not for Resale

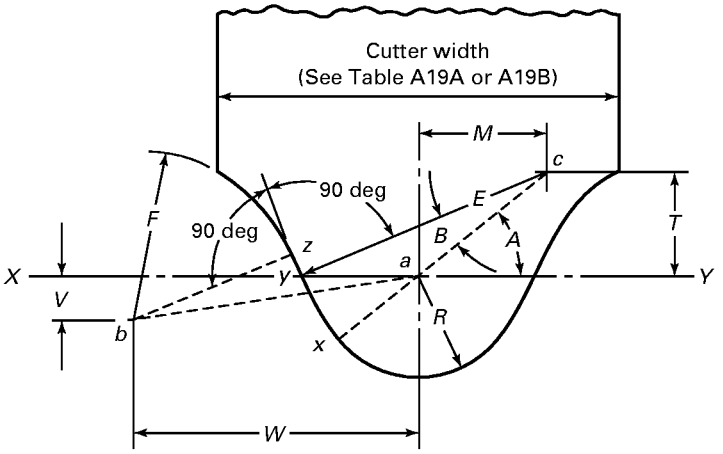

Table A18A Construction Data for Space Cutter Layout, in.

Teeth Range	*M*	*W*	*V*	*T*	*F*	Chord *xy*	*yz*	Angle *Xab*
7– 8	$0.5848D_r$	$1.2790D_r$	$0.5694D_r$	$0.5459D_r$	$0.8686D_r - 0.0015$	$0.2384D_r + 0.0003$	$0.0618D_r$	24 deg
9–11	$0.6032D_r$	$1.3302D_r$	$0.4365D_r$	$0.5255D_r$	$0.8554D_r - 0.0015$	$0.28D_r + 0.0003$	$0.0853D_r$	18 deg, 10 min
12–17	$0.6194D_r$	$1.3694D_r$	$0.2911D_r$	$0.5063D_r$	$0.8364D_r - 0.0015$	$0.3181D_r + 0.0004$	$0.1269D_r$	12 deg
18–34	$0.6343D_r$	$1.3947D_r$	$0.1220D_r$	$0.4875D_r$	$0.8073D_r - 0.0015$	$0.354D_r + 0.0004$	$0.1922D_r$	5 deg
35 and over	$0.6466D_r$	$1.4000D_r$	0	$0.4710D_r$	$0.7857D_r - 0.0015$	$0.385D_r + 0.0004$	$0.2235D_r$	0 deg

GENERAL NOTES:
(a) *E* (same for all ranges) = $1.3025D_r + 0.0015$
(b) *ab* (same for all ranges) = $1.4D_r$

Table A18B Construction Data for Space Cutter Layout, mm

Teeth Range	*M*	*W*	*V*	*T*	*F*	Chord *xy*	*yz*	Angle *Xab*
7– 8	$0.5848D_r$	$1.2790D_r$	$0.5694D_r$	$0.5459D_r$	$0.8686D_r - 0.038$	$0.2384D_r + 0.008$	$0.0618D_r$	24 deg
9–11	$0.6032D_r$	$1.3302D_r$	$0.4365D_r$	$0.5255D_r$	$0.8554D_r - 0.038$	$0.28D_r + 0.008$	$0.0853D_r$	18 deg, 10 min
12–17	$0.6194D_r$	$1.3694D_r$	$0.2911D_r$	$0.5063D_r$	$0.8364D_r - 0.038$	$0.3181D_r + 0.010$	$0.1269D_r$	12 deg
18–34	$0.6343D_r$	$1.3947D_r$	$0.1220D_r$	$0.4875D_r$	$0.8073D_r - 0.038$	$0.354D_r + 0.010$	$0.1922D_r$	5 deg
35 and over	$0.6466D_r$	$1.4000D_r$	0	$0.4710D_r$	$0.7857D_r - 0.038$	$0.385D_r + 0.010$	$0.2235D_r$	0 deg

GENERAL NOTES:
(a) *E* (same for all ranges) = $1.3025D_r + 0.038$
(b) *ab* (same for all ranges) = $1.4D_r$

Copyright ASME International
Provided by IHS under license with ASME
No reproduction or networking permitted without license from IHS
Not for Resale

Copyright ASME International
Provided by IHS under license with ASME
No reproduction or networking permitted without license from IHS

Table A19A Recommended Space Cutter Sizes for Roller Chain Sprockets, in.

Standard Chain No.	Chain Pitch *P*	Roller Diam.	Cutter Diameter						Cutter Width						Diam. of Hole
			6*T*	7–8*T*	9–11*T*	12–17*T*	18–34*T*	35*T* and Over	6*T*	7–8*T*	9–11*T*	12–17*T*	18–34*T*	35*T* and Over	
25	0.250	0.130	2.75	2.75	2.75	2.75	2.75	2.75	0.31	0.31	0.31	0.31	0.28	0.28	1.000
35	0.375	0.200	2.75	2.75	2.75	2.75	2.75	2.75	0.47	0.47	0.47	0.44	0.44	0.41	1.000
40	0.500	0.312	3.00	3.00	3.12	3.12	3.12	3.12	0.75	0.75	0.75	0.75	0.72	0.69	1.000
50	0.625	0.400	3.12	3.12	3.25	3.25	3.25	3.25	0.75	0.75	0.75	0.75	0.72	0.69	1.000
60	0.750	0.469	3.25	3.25	3.38	3.38	3.38	3.38	0.91	0.91	0.91	0.88	0.84	0.81	1.000
80	1.000	0.625	3.88	4.00	4.12	4.12	4.25	4.25	1.50	1.50	1.47	1.47	1.41	1.34	1.250
100	1.250	0.750	4.25	4.38	4.50	4.50	4.62	4.62	1.81	1.81	1.78	1.75	1.69	1.62	1.250
120	1.500	0.875	4.38	4.50	4.62	4.62	4.75	4.75	1.81	1.81	1.78	1.75	1.69	1.62	1.250
140	1.750	1.000	5.00	5.12	5.25	5.38	5.50	5.50	2.09	2.09	2.06	2.03	1.97	1.88	1.500
160	2.000	1.125	5.38	5.50	5.62	5.75	5.88	5.88	2.41	2.41	2.38	2.31	2.25	2.16	1.500
180	2.250	1.406	5.88	6.00	6.25	6.38	6.50	6.50	2.69	2.69	2.66	2.59	2.47	2.41	1.500
200	2.500	1.563	6.38	6.62	6.75	6.88	7.00	7.12	3.00	3.00	2.94	2.91	2.75	2.69	1.750
240	3.000	1.875	7.50	7.75	7.88	8.00	8.00	8.25	3.59	3.59	3.53	3.47	3.34	3.22	2.000

Not for Resale

Copyright ASME International
Provided by IHS under license with ASME
No reproduction or networking permitted without license from IHS

Table A19B Recommended Space Cutter Sizes for Roller Chain Sprockets, mm

Standard Chain No.	Chain Pitch *P*	Roller Diam.	Cutter Diameter						Cutter Width						Diam. of Hole
			6*T*	7–8*T*	9–11*T*	12–17*T*	18–34*T*	35*T* and Over	6*T*	7–8*T*	9–11*T*	12–17*T*	18–34*T*	35*T* and Over	
25	6.35	3.30	69.8	69.8	69.8	69.8	69.8	69.8	7.9	7.9	7.9	7.9	7.1	7.1	25.40
35	9.52	5.08	69.8	69.8	69.8	69.8	69.8	69.8	11.9	11.9	11.9	11.2	11.2	10.4	25.40
40	12.70	7.92	76.2	76.2	79.2	79.2	79.2	79.2	19.0	19.0	19.0	19.0	18.3	17.6	25.40
50	15.88	10.16	79.2	79.2	82.6	82.6	82.6	82.6	19.0	19.0	19.0	19.0	18.3	17.6	25.40
60	19.05	11.91	82.6	82.6	85.9	85.9	85.9	85.9	23.1	23.1	23.1	22.4	21.3	20.6	25.40
80	25.40	15.88	98.6	101.6	104.6	104.6	108.0	108.0	38.1	38.1	37.3	37.3	35.8	34.0	31.75
100	31.75	19.05	108.0	111.3	114.3	114.3	117.3	117.3	46.0	46.0	45.2	44.4	42.9	41.1	31.75
120	38.10	22.22	111.3	114.3	117.3	117.3	120.6	120.6	46.0	46.0	45.2	44.4	42.9	41.1	31.75
140	44.45	25.40	127.0	130.0	133.4	136.7	139.7	139.7	53.1	53.1	52.3	51.6	50.0	47.8	38.10
160	50.80	28.58	136.7	139.7	142.7	146.0	149.4	149.4	61.2	61.2	60.5	58.7	57.2	54.9	38.10
180	57.15	35.71	149.4	152.4	158.8	162.1	165.1	165.1	68.3	68.3	67.6	65.8	62.7	61.2	38.10
200	63.50	39.67	162.1	168.1	171.4	174.8	177.8	180.8	76.2	76.2	74.7	73.9	69.8	68.3	44.45
240	76.20	47.62	190.5	196.8	200.2	203.2	203.2	209.6	91.2	91.2	89.7	88.1	84.8	81.8	50.80

Not for Resale

Table A20A Recommended Hob Sizes for Roller Chain Sprockets, in.

Standard Chain No.	Chain Pitch *P*	Roller Diam.	Hob Diam.	Hob Length	Hole Diam.
25	0.250	0.130	2.62	2.50	1.250
35	0.375	0.200	3.12	2.50	1.250
40	0.500	0.312	3.38	2.50	1.250
50	0.625	0.400	3.62	2.50	1.250
60	0.750	0.469	3.75	2.88	1.250
80	1.000	0.625	4.38	3.75	1.250
100	1.250	0.750	4.75	4.50	1.250
120	1.500	0.875	5.38	5.25	1.250
140	1.750	1.000	6.38	6.00	1.500
160	2.000	1.125	6.88	6.75	1.500
180	2.250	1.406	8.00	8.50	1.750
200	2.500	1.563	8.62	9.38	1.750
240	3.000	1.875	9.75	11.25	2.000

Table A20B Recommended Hob Sizes for Roller Chain Sprockets, mm

Standard Chain No.	Chain Pitch *P*	Roller Diam.	Hob Diam.	Hob Length	Hole Diam.
25	6.35	3.30	66.5	63.5	31.75
35	9.52	5.08	79.2	63.5	31.75
40	12.70	7.92	85.9	63.5	31.75
50	15.88	10.16	91.9	63.5	31.75
60	19.05	11.91	95.2	73.2	31.75
80	25.40	15.88	111.3	95.2	31.75
100	31.75	19.05	120.6	114.3	31.75
120	38.10	22.22	136.7	133.4	31.75
140	44.45	25.40	162.1	152.4	38.10
160	50.80	28.58	174.8	171.4	38.10
180	57.15	35.71	203.2	215.9	44.45
200	63.50	39.67	218.9	238.3	44.45
240	76.20	47.62	247.6	285.8	50.80

Copyright ASME International
Provided by IHS under license with ASME
No reproduction or networking permitted without license from IHS
Not for Resale

ASME B29.3

1	**Double-Pitch Power Transmission Roller Chains**	52
2	**Sprockets**	55
Figures		
1	Double-Pitch Power Transmission Roller Chain and Components	53
2	Offset Link Plate	56
3	Sprocket Diameters	58
Tables		
1A, B	General Chain Dimensions	54
2A, B	Ultimate Dimensional Limits for Interchangeability	55
3A, B	Sprocket Tooth Section Profile Dimensions	57
4A, B	Minus Tolerances on the Bottom or Caliper Diameters of Sprockets for Various Numbers of Effective Teeth	59
5	Sprocket Diameter Factors	60
Nonmandatory Appendix		
A	Supplementary Information	63

Copyright ASME International
Provided by IHS under license with ASME
No reproduction or networking permitted without license from IHS
Not for Resale

DOUBLE-PITCH POWER TRANSMISSION ROLLER CHAINS AND SPROCKETS

1 DOUBLE-PITCH POWER TRANSMISSION ROLLER CHAINS

1.1 Nomenclature

The following definitions are illustrated in Fig. 1.

connecting link (cotter pin type): an outside link consisting of a pin link plate *E*, two assembled pins *G–G*, a detachable pin link plate *D*, and two cotters *H–H*.

double-pitch power transmission roller chain: a series of alternately assembled roller links and pin links in which the pins articulate inside the bushings, and the rollers are free to turn on the bushings. Pins and bushings are press fitted in their respective link plates.

offset link (cotter pin type): a link consisting of two offset link plates *I–I*, a bushing *B*, a roller *C*, a removable pin *J*, and cotter *H*.

pin link: an outside link consisting of two pin link plates *E–E* assembled with two pins *F–F*.

roller link: an inside link consisting of two roller link plates *A–A*, two bushings *B–B*, and two rollers *C–C*.

1.2 General Proportions

(a) The roller diameter is approximately $^{5}/_{16}$ × pitch.

(b) The *chain width* is defined as the distance between roller link plates and equals approximately $^{5}/_{16}$ × pitch.

(c) The pin diameter is approximately $^{5}/_{32}$ × pitch or one-half of the roller diameter.

(d) The thickness of link plates is approximately $^{1}/_{16}$ × pitch.

(e) The maximum height of link plates is 0.475 × pitch.

1.3 Numbering System

The numerical identification and chain numbers will be obtained by numerically adding 2000 to the standard base series chain number.

EXAMPLE: Chain No. 2040 (1 in. pitch) has double the pitch of Chain No. 40 ($^{1}/_{2}$ in. pitch), but uses the same pins, bushings, and rollers.

1.4 Chain Strength Requirements

1.4.1 Minimum Ultimate Tensile Strength

(a) Single strand chains meeting the requirements of this Standard will have a minimum ultimate tensile strength equal to or greater than the values listed in Table 1A or 1B.

(b) Minimum ultimate tensile strength (M.U.T.S) for chain covered by this Standard is the minimum force at which an unused, undamaged chain could fail when subjected to a single tensile loading test.

WARNING: The minimum ultimate tensile strength is NOT a "working load." The M.U.T.S. greatly exceeds the maximum force that may be applied to the chain.

(1) Test Procedure. A tensile force is slowly applied at a rate not to exceed 2.0 in./min (50.8 mm/min), in a uniaxial direction, to the ends of the chain sample.

(2) The Tensile Test Is a Destructive Test. Even though the chain may not visibly fail when subjected to the minimum tensile force, it will have been damaged and will be unfit for service.

1.4.2 Chain Preloading. Chains conforming to this Standard shall be preloaded during manufacturing by applying a tensile force equal to a minimum of 30% of the M.U.T.S. given in Table 1A or 1B.

1.5 Tolerance for Chain Length

New chains, under standard measuring load, shall not be underlength. Overlength tolerance is 0.016 in./ft (1.33 mm/m).

1.6 Measuring Load

Measuring load is the load under which the chain is to be measured for length. It is equal to 1% of the minimum ultimate tensile strength, with a minimum of 31 lb (138 N). Length measurements are to be taken over a length of at least 12 in. (300 mm).

1.7 General Chain Dimensions

See Tables 1A and 1B.

1.8 Dimensional Limits for Interchangeability

To assure interchangeability of links produced by different makers of chain, the following standard maximum and minimum dimensions are adopted. They are not the actual dimensions to be used in manufacturing but rather the limiting dimensions, maximum and minimum, within which it is necessary to keep to assure the desired interchangeability.

Copyright ASME International
Provided by IHS under license with ASME
No reproduction or networking permitted without license from IHS
Not for Resale

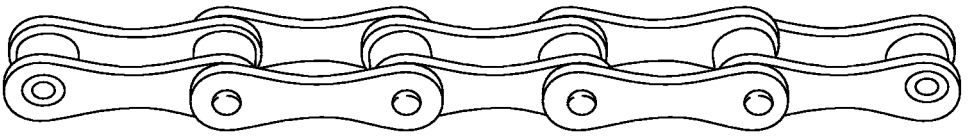

(a) Double-Pitch Power Transmission Roller Chain

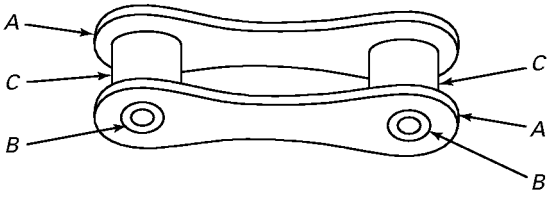

(b) Roller Link

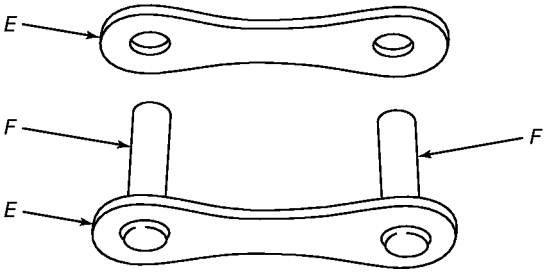

(c) Pin Link

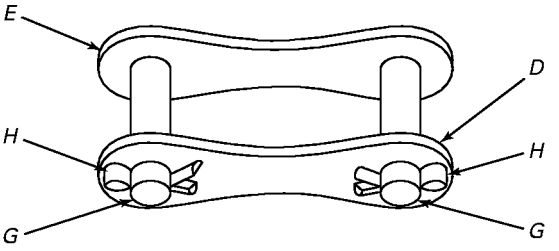

(d) Connecting Link (Cotter Pin Type)

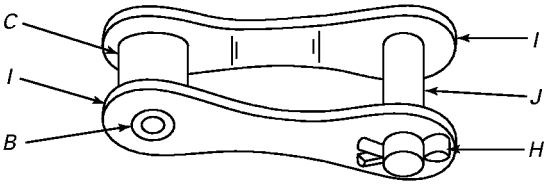

(e) Offset Link (Cotter Pin Type)

Fig. 1 Double-Pitch Power Transmission Roller Chain and Components

Copyright ASME International
Provided by IHS under license with ASME
No reproduction or networking permitted without license from IHS
Not for Resale

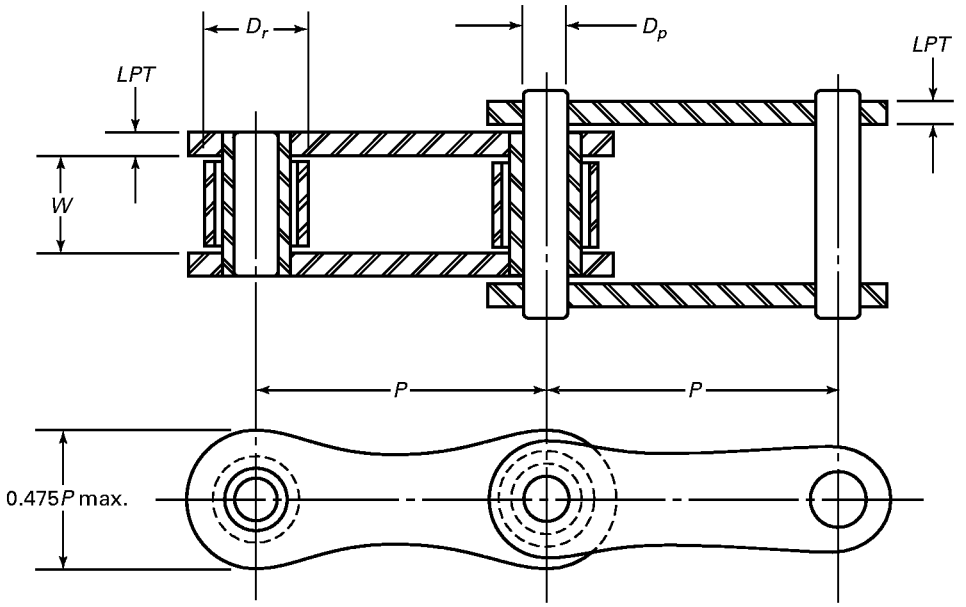

Table 1A General Chain Dimensions, in. and lb

Standard Chain No.	Chain Pitch *P*	Roller Diameter D_r	Chain Width Between Roller Link Plates *W*, Nominal [Note (1)]	Pin Diameter D_p	Link Plate Thickness *LPT*	Measuring Load, lb	M.U.T.S., lb
2040	1.000	0.312	0.312	0.156	0.060	31	3,125
2050	1.250	0.400	0.375	0.200	0.080	49	4,880
2060	1.500	0.469	0.500	0.234	0.094	70	7,030
2080	2.000	0.625	0.625	0.312	0.125	125	12,500
2100	2.500	0.750	0.750	0.375	0.156	195	19,530
2120	3.000	0.875	1.000	0.437	0.187	281	28,125

NOTE:
(1) See Table 2A for decimal minimum dimensions.

Table 1B General Chain Dimensions, mm and N

Standard Chain No.	Chain Pitch *P*	Roller Diameter D_r	Chain Width Between Roller Link Plates *W*, Nominal [Note (1)]	Pin Diameter D_p	Link Plate Thickness *LPT*	Measuring Load, N	M.U.T.S., N
2040	25.40	7.92	7.92	3.96	1.52	138	13 900
2050	31.75	10.16	9.52	5.08	2.03	218	21 710
2060	38.10	11.91	12.70	5.94	2.39	311	31 270
2080	50.80	15.88	15.88	7.92	3.18	556	55 600
2100	63.50	19.05	19.05	9.52	3.96	867	86 870
2120	76.20	22.22	25.40	11.10	4.75	1 250	125 100

NOTE:
(1) See Table 2B for decimal minimum dimensions.

Copyright ASME International
Provided by IHS under license with ASME
No reproduction or networking permitted without license from IHS
Not for Resale

Table 2A Ultimate Dimensional Limits for Interchangeability, in.

Standard Chain No.	Chain Pitch P	Max. Roller Diameter D_r	Min. Distance Between Roller Link Plates m	Max. Width of Roller Link	Min. Distance Between Pin Link Plates	Max. Pin Diameter	Min. Bushing Inner Diameter	Min. Value of x for Offset Link Plates [Note (1)]
2040	1.000	0.312	0.309	0.440	0.442	0.1567	0.1575	0.270
2050	1.250	0.400	0.370	0.545	0.547	0.2004	0.2016	0.330
2060	1.500	0.469	0.495	0.699	0.701	0.2346	0.2354	0.390
2080	2.000	0.625	0.620	0.890	0.892	0.3126	0.3134	0.510
2100	2.500	0.750	0.744	1.081	1.083	0.3756	0.3764	0.630
2120	3.000	0.875	0.993	1.396	1.398	0.4374	0.4386	0.750

NOTE:
(1) See para. 1.8 and Fig. 2.

Table 2B Ultimate Dimensional Limits for Interchangeability, mm

Standard Chain No.	Chain Pitch P	Max. Roller Diameter D_r	Min. Distance Between Roller Link Plates m	Max. Width of Roller Link	Min. Distance Between Pin Link Plates	Max. Pin Diameter	Min. Bushing Inner Diameter	Min. Value of x for Offset Link Plates [Note (1)]
2040	25.40	7.92	7.85	11.17	11.23	3.98	4.00	6.86
2050	31.75	10.16	9.40	13.84	13.89	5.09	5.12	5.38
2060	38.10	11.91	12.53	17.75	17.81	5.95	5.98	9.91
2080	50.80	15.87	15.75	22.60	22.66	7.94	7.96	12.95
2100	63.50	19.05	18.90	27.45	27.51	9.54	9.58	16.00
2120	76.20	22.23	25.22	35.46	35.51	11.11	11.14	19.05

NOTE:
(1) See para. 1.8 and Fig. 2.

(a) The minimum distance between roller link plates is the nominal width of the chain minus the quantity (0.002 + 0.003 × pitch/2).

(b) Maximum pin diameter: see Tables 2A and 2B.

(c) Minimum hole in bushing: see Tables 2A and 2B.

(d) Maximum overall width of roller link = nominal width of chain + (2.12 × nominal link plate thickness).

(e) Minimum distance between pin link plates = maximum overall width of roller link + 0.002 in.

(f) Standard offset links are made to accommodate chains having link plates with a maximum height equal to 0.475 × pitch. Therefore, the minimum value of X (see Fig. 2) is:

$$X \text{ (min.)} = 0.24P + 0.030$$

where

P = chain pitch

2 SPROCKETS

2.1 Types of Sprockets

Sprocket dimensional design for these double-pitch chains is the same as for their respective base chain series, except for necessary changes in diametral dimensions. See para. 3.1 and Fig. 4 in ASME B29.1 for types of sprockets.

2.2 Tooth Section Profile

The section profile, Sections A and B of Tables 3A and 3B, shows the recommended chamfering of sprockets for roller chains. All sprocket flanges are to be chamfered to provide guidance of the chain onto the sprocket in case of misalignment due to sprocket misalignment or permissible flange weave. Flange chamfer may be as in Section A or B, or anything in between. The sprocket chamfer dimensions R_c, g, and h are noncritical and are given only as a guide for general design proportions.

Copyright ASME International
Provided by IHS under license with ASME
No reproduction or networking permitted without license from IHS
Not for Resale

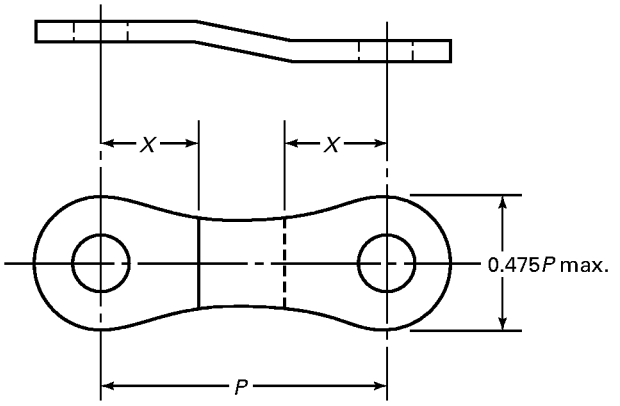

Fig. 2 Offset Link Plate

2.3 Diameters and Measuring Dimensions

See Fig. 3 in ASME B29.3, and Tables 8A and 8B in ASME B29.1, for maximum eccentricity and face runout tolerances for commercial sprockets.

(a) Sprockets for double-pitch power transmission chains may have one or two sets of effective teeth, with one set comprising those teeth that contact the chain rollers in one revolution of the chain sprocket.

(b) A sprocket is single-cut if it has only one set of effective teeth. A double-cut sprocket has two sets of effective teeth. Tooth spaces of the second set are located midway between those of the first.

(c) Double-cut sprockets with an odd number of actual teeth, such as 21, have half as many effective teeth, e.g., $10\frac{1}{2}$.

(d) Double-cut sprockets with an odd number of actual teeth, such as 21, and therefore with half as many effective teeth, $10\frac{1}{2}$, provide automatic hunting, each actual tooth engaging a chain roller once during two revolutions of such a sprocket.

(e) Double-cut sprockets with an even number of actual teeth have an integral number of effective teeth and cannot provide automatic hunting, because only one set of effective teeth can engage chain rollers, regardless of how many revolutions the sprocket may have made. Manual shifting of the chain by one-half effective tooth is necessary to provide distribution of wear to the previously inactive set of teeth.

(f) The nomenclature associated with Fig. 3 is as follows:

BD = bottom diameter
= $PD - D_r$
CD = caliper diameter
D_r = roller diameter
N = number of effective teeth
P = chain pitch
PD = pitch diameter
= $P/\sin(180 \text{ deg}/N)$

CD, single-cut, if N is an odd number[1]
= $PD \cos(90 \text{ deg}/N) - D_r$

CD, single-cut, if N is an even number[2]
= $PD - D_r = BD$

CD, double-cut, if N is a fractional number[1]
= $PD \cos(45 \text{ deg}/N) - D_r$

CD, double-cut, if N is an odd or even whole number[2]
= $PD - D_r = BD$

Tolerances on the bottom or caliper diameter of sprockets:

Plus tolerance = 0.000
Minus tolerance = 0.002 × pitch × $\sqrt{N}$ + 0.006 in., with a minimum tolerance of 0.012 in. and a maximum tolerance of 0.048 in.

Maximum hub diameter MHD of sprockets
= (P, in.)[cot (180 deg/N) − 0.5] − 0.030 in.
= (P, mm)[cot (180 deg/N) − 0.5] − 0.76 mm

Approximate outside diameter of sprocket
= $PD + P/2[0.6 - \tan(90 \text{ deg}/N)]$

2.4 Tolerances for Diameters and Measuring Dimensions

See Tables 4A and 4B.

2.5 Tabulation of Diameters

See Table 5.

[1] These caliper diameters are measured across any two tooth spaces that are *most nearly* diametrically opposite to each other.

[2] These caliper diameters are measured across any two tooth spaces that are *exactly* diametrically opposite to each other.

Copyright ASME International
Provided by IHS under license with ASME
No reproduction or networking permitted without license from IHS
Not for Resale

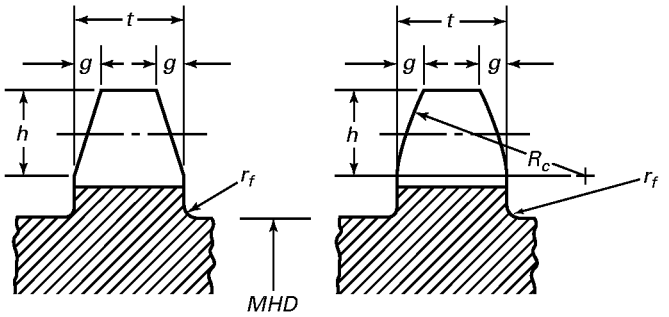

g = width of chamfer
= approximately $^1/_{16}P$ (but not to exceed $W/3$)
h = depth of chamfer = approximately $0.25P$
MHD = maximum hub and groove diameter
R_c min. = chamfer radius
= $0.532P$ (approximately tangent to side)
r_f max. = fillet radius
= $0.02P$ for maximum hub diameter
t max. = maximum flange thickness = $0.93W - 0.006$

Table 3A Sprocket Tooth Section Profile Dimensions, in.

Chain No.	Chain Pitch *P*	Chain Width *W*	Max. Sprocket Thickness *t*	Minus Tolerance on *t*	Depth of Chamfer *h*	Width of Chamfer *g*	Min. Radius R_c
2040	1.000	0.312	0.284	0.035	0.250	0.062	0.531
2050	1.250	0.375	0.343	0.036	0.312	0.078	0.664
2060	1.500	0.500	0.459	0.036	0.375	0.094	0.796
2080	2.000	0.625	0.575	0.040	0.500	0.125	1.062
2100	2.500	0.750	0.692	0.046	0.625	0.156	1.327
2120	3.000	1.000	0.924	0.057	0.750	0.188	1.593

Table 3B Sprocket Tooth Section Profile Dimensions, mm

Chain No.	Chain Pitch *P*	Chain Width *W*	Max. Sprocket Thickness *t*	Minus Tolerance on *t*	Depth of Chamfer *h*	Width of Chamfer *g*	Min. Radius R_c
2040	25.40	7.92	7.21	0.89	6.35	1.57	13.49
2050	31.75	9.52	8.71	0.91	7.92	1.98	16.87
2060	38.10	12.70	11.66	0.91	9.52	2.39	20.22
2080	50.80	15.88	14.60	1.02	12.70	3.18	26.97
2100	63.50	19.05	17.58	1.17	15.88	3.96	33.71
2120	76.20	25.40	23.47	1.45	19.05	4.78	40.46

Copyright ASME International
Provided by IHS under license with ASME
No reproduction or networking permitted without license from IHS
Not for Resale

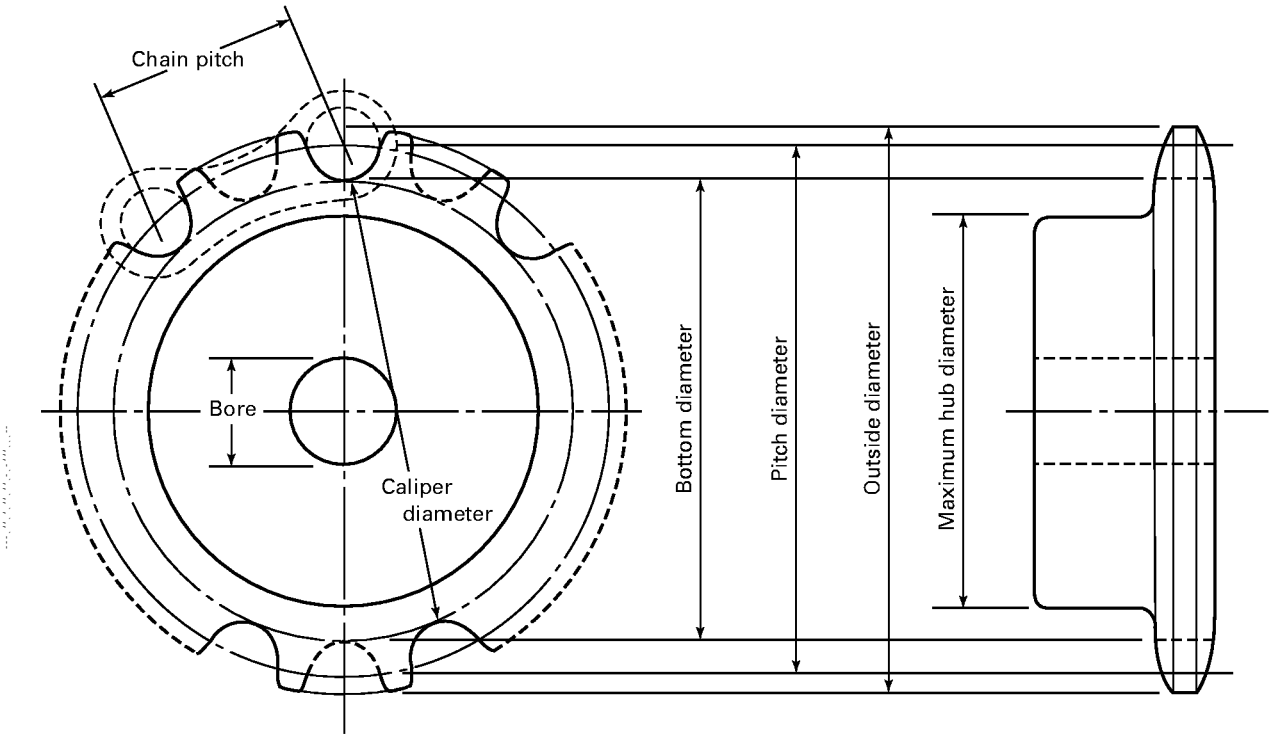

GENERAL NOTE: Effective teeth shown solid; extra set of tooth spaces is shown by broken lines.

Fig. 3 Sprocket Diameters

Copyright ASME International
Provided by IHS under license with ASME
No reproduction or networking permitted without license from IHS
Not for Resale

Table 4A Minus Tolerances on the Bottom or Caliper Diameters of Sprockets for Various Numbers of Effective Teeth, in.

		Number of Teeth *N*				
Chain No.	Chain Pitch *P*	Up to 15½	16–24½	25–35½	36–48½	49–60
2040	1.000	0.012	0.014	0.016	0.018	0.020
2050	1.250	0.014	0.015	0.019	0.021	0.024
2060	1.500	0.015	0.018	0.021	0.024	0.027
2080	2.000	0.018	0.022	0.026	0.030	0.034
2100	2.500	0.021	0.026	0.031	0.036	0.041
2120	3.000	0.024	0.030	0.036	0.042	0.048

GENERAL NOTE: No plus tolerance.

Table 4B Minus Tolerances on the Bottom or Caliper Diameters of Sprockets for Various Numbers of Effective Teeth, mm

		Number of Teeth *N*				
Chain No.	Chain Pitch *P*	Up to 15½	16–24½	25–35½	36–48½	49–60
2040	25.40	0.30	0.36	0.41	0.46	0.51
2050	31.80	0.36	0.41	0.48	0.53	0.61
2060	38.10	0.38	0.46	0.53	0.61	0.69
2080	50.80	0.46	0.56	0.66	0.76	0.86
2100	63.50	0.53	0.66	0.79	0.91	1.04
2120	76.20	0.61	0.76	0.91	1.07	1.22

GENERAL NOTE: No plus tolerance.

Copyright ASME International
Provided by IHS under license with ASME
No reproduction or networking permitted without license from IHS

Not for Resale

Table 5 Sprocket Diameter Factors

No. of Effective Teeth	Pitch Diameter	Approximate Outside Diameter	Caliper Diameter Factor	
			Single Cut (*N* is Odd)	Double Cut (*N* is Fractional)
5	1.7013	1.839	1.6180	. . .
5½	1.8496	2.003	. . .	1.8308
6	2.0000	2.166	. . .	. . .
6½	2.1519	2.329	. . .	2.1361
7	2.3048	2.491	2.2470	. . .
7½	2.4586	2.652	. . .	2.4451
8	2.6131	2.814	. . .	. . .
8½	2.7682	2.975	. . .	2.7564
9	2.9238	3.136	2.8794	. . .
9½	3.0798	3.296	. . .	3.0692
10	3.2361	3.457	. . .	. . .
10½	3.3927	3.617	. . .	3.3831
11	3.5495	3.778	3.5133	. . .
11½	3.7065	3.938	. . .	3.6978
12	3.8637	4.098	. . .	. . .
12½	4.0211	4.258	. . .	4.0131
13	4.1786	4.418	4.1481	. . .
13½	4.3362	4.578	. . .	4.3289
14	4.4940	4.738	. . .	. . .
14½	4.6518	4.897	. . .	4.6450
15	4.8097	5.057	4.7834	. . .
15½	4.9677	5.217	. . .	4.9614
16	5.1258	5.377	. . .	. . .
16½	5.2840	5.536	. . .	5.2780
17	5.4422	5.696	5.4190	. . .
17½	5.6005	5.855	. . .	5.5948
18	5.7588	6.015	. . .	. . .
18½	5.9171	6.175	. . .	5.9118
19	6.0755	6.334	6.0548	. . .
19½	6.2340	6.494	. . .	6.2289
20	6.3924	6.653	. . .	. . .
20½	6.5509	6.813	. . .	6.5461
21	6.7095	6.972	6.6907	. . .
21½	6.8681	7.131	. . .	6.8635
22	7.0267	7.291	. . .	. . .
22½	7.1853	7.450	. . .	7.1809
23	7.3439	7.610	7.3268	. . .
23½	7.5026	7.769	. . .	7.4984
24	7.6613	7.929	. . .	. . .
24½	7.8200	8.088	. . .	7.8160
25	7.9787	8.247	7.9630	. . .
25½	8.1375	8.407	. . .	8.1336
26	8.2962	8.566	. . .	. . .
26½	8.4550	8.725	. . .	8.4513
27	8.6138	8.884	8.5992	. . .
27½	8.7726	9.044	. . .	8.7690
28	8.9314	9.203	. . .	. . .
28½	9.0902	9.363	. . .	9.0868

Copyright ASME International
Provided by IHS under license with ASME
No reproduction or networking permitted without license from IHS
Not for Resale

Table 5 Sprocket Diameter Factors (Cont'd)

No. of Effective Teeth	Pitch Diameter	Approximate Outside Diameter	Caliper Diameter Factor	
			Single Cut (*N* is Odd)	Double Cut (*N* is Fractional)
29	9.2491	9.522	9.2355	...
29½	9.4080	9.681	...	9.4046
30	9.5668	9.841	...	...
30½	9.7256	10.000	...	9.7224
31	9.8845	10.159	9.8718	...
31½	10.0434	10.318	...	10.0403
32	10.2023	10.478	...	...
32½	10.3612	10.637	...	10.3582
33	10.5201	10.796	10.5082	...
33½	10.6790	10.956	...	10.6761
34	10.8379	11.115	...	...
34½	10.9969	11.274	...	10.9940
35	11.1558	11.433	11.1446	...
35½	11.3148	11.593	...	11.3120
36	11.4737	11.752	...	...
36½	11.6237	11.911	...	11.6300
37	11.7916	12.070	11.7810	...
37½	11.9506	12.230	...	11.9480
38	12.1095	12.389	...	...
38½	12.2685	12.548	...	12.2660
39	12.4275	12.707	12.4174	...
39½	12.5865	12.867	...	12.5840
40	12.7455	13.026	...	...
40½	12.9045	13.185	...	12.9021
41	13.0635	13.344	13.0539	...
41½	13.2225	13.504	...	13.2201
42	13.3815	13.663	...	...
42½	13.5405	13.822	...	13.5382
43	13.6995	13.981	13.6904	...
43½	13.8585	14.140	...	13.8563
44	14.0175	14.300	...	...
44½	14.1765	14.459	...	14.1744
45	14.3355	14.618	14.3269	...
45½	14.4946	14.777	...	14.4925
46	14.6536	14.937	...	...
46½	14.8127	15.096	...	14.8106
47	14.9717	15.255	14.9634	...
47½	15.1308	15.414	...	15.1287
48	15.2898	15.573	...	...
48½	15.4488	15.733	...	15.4468
49	15.6079	15.892	15.5999	...
49½	15.7669	16.051	...	15.7649
50	15.9260	16.210	...	...
50½	16.0850	16.369	...	16.0831
51	16.2441	16.529	16.2364	...
51½	16.4031	16.688	...	16.4012
52	16.5622	16.847	...	...
52½	16.7212	17.006	...	16.7194

Copyright ASME International
Provided by IHS under license with ASME
No reproduction or networking permitted without license from IHS

Not for Resale

Table 5 Sprocket Diameter Factors (Cont'd)

No. of Effective Teeth	Pitch Diameter	Approximate Outside Diameter	Caliper Diameter Factor	
			Single Cut (*N* is Odd)	Double Cut (*N* is Fractional)
53	16.8803	17.165	16.8729	...
53½	17.0393	17.325	...	17.0375
54	17.1984	17.484	...	...
54½	17.3575	17.643	...	17.3557
55	17.5165	17.802	17.5094	...
55½	17.6756	17.961	...	17.6739
56	17.8347	18.121	...	...
56½	17.9938	18.280	...	17.9920
57	18.1528	18.439	18.1459	...
57½	18.3119	18.598	...	18.3102
58	18.4710	18.757	...	...
58½	18.6301	18.917	...	18.6284
59	18.7892	19.076	18.7825	...
59½	18.9482	19.235	...	18.9466
60	19.1073	19.394	...	...

GENERAL NOTES:

(a) This Table includes standard pitch diameters, outside diameters, and caliper diameter factors for single-cut sprockets where the number of effective teeth is odd, and double-cut sprockets where the number of effective teeth is fractional to suit a double-pitch chain of unit pitch (e.g., 1 in. or 1 mm), small roller series (the respective diameters for sprockets to suit a chain of any other pitch are directly proportional to the pitch of the chain).

(b) For other pitches of double-pitch roller chain, small roller series:
Pitch diameter = pitch diameter from this Table × chain pitch
Outside diameter = outside diameter from this Table × chain pitch
Caliper diameter factor for single cut, if *N* is an odd number = *PD* (cos 90 deg/*N*)
Caliper diameter factor for double cut, if *N* is a fractional number = *PD* (cos 45 deg/*N*)
Caliper diameter for single cut, if *N* is an odd number, and double cut, if *N* is a fractional number = (caliper diameter factor from this Table × chain pitch) − roller diameter R_S
Caliper diameter for single cut, if *N* is an even number, and double cut, if *N* is an odd or even number = pitch diameter − roller diameter R_S

Copyright ASME International
Provided by IHS under license with ASME
No reproduction or networking permitted without license from IHS
Not for Resale

NONMANDATORY APPENDIX A
SUPPLEMENTARY INFORMATION[1]

A1 CHAIN SELECTION

A1.1 Design Factors

The horsepower ratings in Tables A1 through A6 generally apply to lubricated double-pitch roller chains described in ASME B29.3. The ratings reflect a service factor of 1, the use of recommended lubrication methods, and a drive arrangement where two aligned sprockets are mounted on parallel shafts in a horizontal plane. Under these conditions, approximately 15,000 hr of service life at full load operation may generally be expected.

It is beyond the scope of this publication to present selection procedures for all conditions. Consult chain manufacturers for assistance with any special application requirements.

A1.2 Service Factors

Service factors as given in the following tabulation should be used in connection with the horsepower ratings, the load capacity being multiplied by the factor to obtain the desired chain capacity.

	Conditions of Service	
Type of Load	10 hr Day	24 hr Day
Uniform load, average conditions	1.0	1.2
Moderate shock, abnormal conditions	1.2	1.4
Heavy shock, abnormal conditions	1.4	1.7

A1.3 Lubrication

Lubrication of roller chains is essential for effectively minimizing metal-to-metal contact of pin–bushing joints of the chain. Oil should be applied to link plate edges as subsequently explained under Type I method of lubrication, since access to pin–bushing clearances is possible only through clearances between pin link plates and roller link plates. Oil applied on the centerline of rollers cannot reach pin–bushing joints and therefore cannot retard chain wear elongation.

A good grade of mineral oil, without additives, of medium or light consistency, free flowing at the prevailing temperature, should be used.

Temperature, °F	Recommended Lubricant
20– 40	SAE 20
40–100	SAE 30
100–120	SAE 40
120–140	SAE 50

Drives should be protected against dirt and moisture. The method of lubrication, which is influenced by the speed of the chain and the amount of power transmitted, should be in accordance with one of the following:

(a) Type I. Drip (4 to 10 drops per minute), shallow bath, or manual with oil applied frequently with a brush or spout can to upper edges of all link plates when in the lower span of chain.[2]

(b) Type II. Rapid drip (20 drops per minute minimum) or continuous with shallow bath, disc, or slinger.[2]

(c) Type III. Continuous, with disc, slinger, or circulating pump.

The choice of method or type of lubrication should, in general, be guided by the following:

Chain Speed	Method of Lubrication
Up to 600 ft/min (3 m/s)	Type I
600 to 1500 ft/min (3 to 7.6 m/s)	Type II
Above 1500 ft/min (7.6 m/s)	Type III

Heavy oils and greases are not recommended for lubrication of roller chains except under unusual conditions of service, because they are generally too stiff to enter and fill the small clearances between the chain parts. Engineers of chain manufacturers should be consulted in regard to lubrication of roller chain drives for which lubrication other than as outlined might seem to be desirable.

A1.4 Sprockets

Sprockets should have tooth shape, thickness, profile, and diameters conforming to these standards. Small sprockets, 17 effective teeth and less, will preferably be of steel, 180 Brinell minimum for speeds to about 600 ft/min (3 m/s). For speeds greater than 600 ft/min (3 m/s), either 0.20 carbon steel, carburized, hardened, and drawn, or 0.40 or higher carbon steel, heat treated and drawn, are generally recommended, the hardness usu-

[1] Made available through the cooperation of the American Chain Association.

[2] A circulating pump may be required when transmitted horsepower is substantial and center distance is short.

Copyright ASME International
Provided by IHS under license with ASME
No reproduction or networking permitted without license from IHS
Not for Resale

ally being between 300 Brinell minimum and 550 Brinell maximum depending on the type of service. Sprocket speeds should not exceed those shown in Table A7.

Larger sprockets may be made from unhardened steel plates, bars, castings, forgings, or cast iron, depending upon the duty imposed.

A1.5 Center Distance

Center distance between sprockets should be sufficient to provide approximately 135 deg minimum arc of meshing of the chain on the smaller sprocket. Means for adjustment of center distance is recommended, especially if there is fluctuation of load or if the sprockets are on vertical centers.

A1.6 Alignment

Alignment of shafting and sprocket tooth faces must be such as to provide distribution of the load across the entire chain width. Shaftings, bearings, and foundations should be suitable to maintain the initial static alignment.

NOTE: The horsepower tables are directly applicable only if the sprockets are on parallel, horizontal shafts.

A1.7 Sprocket Cutter Selection

The tooth space form for double-pitch chain sprockets is basically the same as that for the respective base chain series. ASME B29.1 covers tooth space form and cutter design for the base chain series sprockets.

When cutting double-pitch sprockets with a tooth space cutter, it is necessary to use the space cutter for the base chain series but having the next higher range of teeth than the number of effective teeth to be cut.

EXAMPLE: For 15 Teeth No. 2080, a No. 80 space cutter having a range of 18–34 teeth should be used instead of one for the 12–17 tooth range.

When cutting double-pitch sprockets with a base chain hob or Fellows cutter, it is necessary to cut an extra set or a double number of teeth, resulting in two sets of teeth. The chain will engage only one set of teeth.

Copyright ASME International
Provided by IHS under license with ASME
No reproduction or networking permitted without license from IHS
Not for Resale

Copyright ASME International
Provided by IHS under license with ASME
No reproduction or networking permitted without license from IHS

Table A1 Horsepower Ratings, Double-Pitch Power Transmission Roller Chain — No. 2040

No. of Effective Teeth in Small Spkt.	1 in. Pitch Revolutions Per Minute — Small Sprocket																			
	25	50	100	150	200	250	300	350	400	450	500	550	600	700	800	900	1000	1100	1200	1300
6	0.10	0.17	...	...	...	...	...	...	...	...	...	...	...	...	...	...	...	...	...	...
7	0.12	0.21	0.35	0.46	0.54	...	...	...	...	...	...	...	...	...	...	...	...	...	...	...
8	0.14	0.25	0.45	0.64	0.72	0.82	0.90	...	...	...	...	...	...	...	...	...	...	...	...	...
9	0.16	0.30	0.53	0.72	0.88	1.02	1.14	1.3	1.3	...	...	...	...	...	...	...	...	...	...	...
10	0.18	0.34	0.61	0.82	1.04	1.21	1.37	1.5	1.6	1.7	1.8	1.9	...	...	...	...	...	...	...	...
11	0.20	0.38	0.69	0.96	1.20	1.41	1.59	1.8	1.9	2.0	2.1	2.2	2.3	...	...	...	...	...	...	...
12	0.22	0.42	0.77	1.07	1.34	1.58	1.80	2.0	2.2	2.3	2.5	2.6	2.7	2.9	...	...	...	...	...	...
13	0.24	0.46	0.84	1.18	1.48	1.76	2.01	2.2	2.4	2.6	2.8	2.9	3.1	3.3	3.5	...	...	...	...	...
14	0.26	0.50	0.92	1.29	1.62	1.93	2.21	2.5	2.7	2.9	3.1	3.3	3.4	3.7	3.9	4.1	...	...	...	...
15	0.28	0.54	0.99	1.39	1.76	2.09	2.40	2.7	2.9	3.2	3.4	3.6	3.8	4.1	4.3	4.5	4.7	...	...	...
16	0.30	0.57	1.06	1.50	1.89	2.25	2.59	2.9	3.2	3.4	3.7	3.9	4.1	4.4	4.7	5.0	5.1	...	...	...
17	0.32	0.61	1.13	1.60	2.02	2.41	2.77	3.1	3.4	3.7	4.0	4.2	4.4	4.8	5.1	5.4	5.6	5.7	...	...
18	0.34	0.65	1.20	1.70	2.15	2.57	2.95	3.3	3.6	3.9	4.2	4.5	4.7	5.1	5.5	5.8	6.0	6.2	...	...
19	0.36	0.69	1.27	1.80	2.28	2.73	3.13	3.5	3.9	4.2	4.5	4.8	5.0	5.5	5.9	6.2	6.4	6.6	6.7	...
20	0.38	0.72	1.34	1.89	2.40	2.87	3.30	3.7	4.1	4.4	4.7	5.0	5.3	5.8	6.2	6.5	6.8	7.0	7.1	...
21	0.40	0.76	1.41	1.99	2.53	3.01	3.47	3.9	4.3	4.6	5.0	5.3	5.6	6.1	6.5	6.9	7.1	7.4	7.5	...
22	0.42	0.79	1.48	2.09	2.64	3.16	3.63	4.1	4.5	4.9	5.2	5.5	5.8	6.4	6.8	7.2	7.5	7.7	7.9	...
23	0.44	0.83	1.54	2.18	2.76	3.30	3.80	4.3	4.7	5.1	5.4	5.8	6.1	6.6	7.1	7.5	7.8	8.0	8.2	8.3
24	0.46	0.87	1.61	2.27	2.88	3.44	3.95	4.4	4.9	5.3	5.7	6.0	6.4	6.9	7.4	7.8	8.1	8.4	8.5	8.6
25	0.48	0.90	1.67	2.36	3.00	3.58	4.11	4.6	5.1	5.5	5.9	6.3	6.6	7.2	7.7	8.1	8.4	8.7	8.8	8.9
30	0.57	1.08	1.99	2.81	3.56	4.24	4.87	5.4	6.0	6.5	6.9	7.4	7.8	8.4	8.9	9.4	9.7	10.0	10.1	10.1
35	0.66	1.25	2.30	3.24	4.09	4.86	5.57	6.2	6.8	7.4	7.9	8.3	8.7	9.4	10.0	10.4	10.7	10.9	11.0	...
40	0.75	1.41	2.60	3.65	4.59	5.45	6.22	6.9	7.6	8.2	8.7	9.2	9.6	10.3	10.9	11.2	11.5	11.6	...	...
45	0.84	1.58	2.89	4.04	5.07	6.00	6.84	7.6	8.3	8.9	9.4	9.9	10.3	11.0	11.6	11.9	12.0	...	...	...
50	0.93	1.74	3.17	4.42	5.53	6.52	7.41	8.2	8.9	9.6	10.1	10.6	11.0	11.7	12.1	12.3	...	...	...	...
55	1.01	1.90	3.45	4.79	5.97	7.02	7.95	8.8	9.5	10.2	10.7	11.2	11.6	12.2	...	...	...	...	...	...
60	1.10	2.05	3.70	5.14	6.39	7.49	8.46	9.3	10.0	10.7	11.2	11.7	12.0	...	...	...	...	...	...	...
	Type I Lubrication			Type II Lubrication				Type III Lubrication												

Type I: Drip (4 to 10 drops per minute), shallow bath, or manual with oil applied frequently with a brush or spout can to upper edges of all link plates when in the lower span of chain.
Type II: Rapid drip (20 drops per minute minimum), or continuous with shallow bath, disc, or slinger.
Type III: Continuous with disc, slinger, or circulating pump.

Not for Resale

Copyright ASME International
Provided by IHS under license with ASME
No reproduction or networking permitted without license from IHS

Table A2 Horsepower Ratings, Double-Pitch Power Transmission Roller Chain — No. 2050

No. of Effective Teeth in Small Spkt.	1¼ in. Pitch Revolutions Per Minute — Small Sprocket																			
	25	50	100	150	200	250	300	350	400	450	500	550	600	650	700	750	800	850	900	950
6	0.18	0.31	...	...	...	...	...	...	...	...	...	...	...	...	...	...	...	...	...	...
7	0.22	0.40	0.65	...	...	...	...	...	...	...	...	...	...	...	...	...	...	...	...	...
8	0.26	0.48	0.82	1.08	1.28	...	...	...	...	...	...	...	...	...	...	...	...	...	...	...
9	0.31	0.56	0.98	1.32	1.59	1.82	1.99	...	...	...	...	...	...	...	...	...	...	...	...	...
10	0.35	0.64	1.14	1.55	1.89	2.19	2.42	2.62	2.80	...	...	...	...	...	...	...	...	...	...	...
11	0.39	0.72	1.30	1.77	2.19	2.55	2.85	3.11	3.35	3.55	...	...	...	...	...	...	...	...	...	...
12	0.43	0.80	1.45	1.99	2.47	2.90	3.26	3.58	3.88	4.12	4.31	...	...	...	...	...	...	...	...	...
13	0.47	0.88	1.59	2.20	2.74	3.23	3.65	4.03	4.38	4.66	4.90	5.11	5.30	...	...	...	...	...	...	...
14	0.51	0.95	1.73	2.41	3.01	3.55	4.02	4.45	4.85	5.17	5.47	5.73	5.95	6.09	...	...	...	...	...	...
15	0.55	1.02	1.87	2.62	3.27	3.87	4.37	4.86	5.30	5.67	6.01	6.31	6.57	6.75	6.94	...	...	...	...	...
16	0.58	1.09	2.01	2.82	3.52	4.17	4.72	5.25	5.73	6.15	6.53	6.87	7.17	7.39	7.61	7.79	...	...	...	...
17	0.62	1.17	2.14	3.01	3.77	4.46	5.07	5.67	6.15	6.61	7.05	7.42	7.74	7.99	8.24	8.46	8.62	...	...	...
18	0.66	1.24	2.27	3.20	4.01	4.75	5.41	6.04	6.56	7.07	7.54	7.95	8.29	8.56	8.84	9.08	9.28	...	...	...
19	0.70	1.31	2.40	3.39	4.25	5.04	5.75	6.40	6.96	7.51	8.01	8.46	8.82	9.12	9.42	9.68	9.90	10.08	...	...
20	0.74	1.38	2.53	3.57	4.48	5.32	6.07	6.75	7.35	7.94	8.46	8.94	9.33	9.65	9.97	10.25	10.49	10.69	...	...
21	0.77	1.45	2.66	3.75	4.71	5.59	6.38	7.10	7.74	8.36	8.90	9.40	9.82	10.16	10.50	10.80	11.06	11.28	11.44	...
22	0.81	1.52	2.79	3.92	4.93	5.85	6.69	7.44	8.12	8.77	9.33	9.84	10.29	10.65	11.01	11.32	11.59	11.83	12.00	...
23	0.84	1.59	2.92	4.10	5.15	6.11	6.99	7.77	8.49	9.16	9.75	10.27	10.74	11.12	11.50	11.82	12.10	12.35	12.53	...
24	0.88	1.66	3.05	4.27	5.37	6.37	7.29	8.10	8.85	9.54	10.16	10.70	11.18	11.57	11.97	12.30	12.59	12.85	13.03	...
25	0.91	1.72	3.17	4.45	5.59	6.62	7.57	8.42	9.20	9.91	10.56	11.12	11.61	12.01	12.42	12.75	13.05	13.33	13.50	13.57
30	1.09	2.05	3.77	5.29	6.62	7.82	8.92	9.92	10.80	11.65	12.32	12.99	13.55	13.96	14.39	14.76	15.06	15.30	15.48	...
35	1.27	2.38	4.35	6.07	7.60	8.95	10.20	11.27	12.25	13.12	13.90	14.59	15.17	15.58	16.00	16.35	16.62	16.82	16.94	...
40	1.44	2.70	4.90	6.82	8.50	10.02	11.32	12.51	13.55	14.45	15.25	15.95	16.57	16.92	17.29	17.58	17.78	...	...	...
45	1.61	3.00	5.45	7.55	9.35	11.00	12.40	13.65	14.70	15.62	16.45	17.14	17.67	17.96	18.29	18.49	...	...	...	...
50	1.78	3.30	5.95	8.25	10.17	11.90	13.40	14.68	15.75	16.70	17.55	18.08	18.55	18.80	...	...	...	...	...	...
55	1.95	3.60	6.45	8.90	10.95	12.75	14.30	15.60	16.67	17.57	18.37	18.91	...	...	...	...	...	...	...	...
60	2.11	3.90	6.95	9.52	11.70	13.55	15.12	16.45	17.54	...	...	...	...	...	...	...	...	...	...	...
	Type I Lubrication		Type II Lubrication			Type III Lubrication														

Type I: Drip (4 to 10 drops per minute), shallow bath, or manual with oil applied frequently with a brush or spout can to upper edges of all link plates when in the lower span of chain.
Type II: Rapid drip (20 drops per minute minimum), or continuous with shallow bath, disc, or slinger.
Type III: Continuous with disc, slinger, or circulating pump.

Not for Resale

Copyright ASME International
Provided by IHS under license with ASME
No reproduction or networking permitted without license from IHS

Table A3 Horsepower Ratings, Double-Pitch Power Transmission Roller Chain — No. 2060

No. of Effective Teeth in Small Spkt.	1½ in. Pitch Revolutions Per Minute — Small Sprocket																			
	25	50	75	100	125	150	175	200	225	250	275	300	350	400	450	500	550	600	650	700
6	0.30	...	...	...	...	...	...	...	...	...	...	...	...	...	...	...	...	...	...	...
7	0.37	0.66	0.88	1.06	...	...	...	...	...	...	...	...	...	...	...	...	...	...	...	...
8	0.44	0.80	1.09	1.34	1.56	1.74	1.89	...	...	...	...	...	...	...	...	...	...	...	...	...
9	0.52	0.94	1.30	1.62	1.90	2.15	2.36	2.55	2.72	...	...	...	...	...	...	...	...	...	...	...
10	0.59	1.08	1.51	1.89	2.23	2.54	2.82	3.07	3.29	3.50	3.68	3.83	...	...	...	...	...	...	...	...
11	0.66	1.21	1.71	2.15	2.54	2.92	3.25	3.58	3.84	4.12	4.34	4.56	4.93	...	...	...	...	...	...	...
12	0.73	1.34	1.90	2.41	2.85	3.29	3.67	4.06	4.37	4.71	4.97	5.24	5.71	6.06	...	...	...	...	...	...
13	0.79	1.47	2.09	2.66	3.15	3.65	4.08	4.52	4.88	5.27	5.59	5.91	6.46	6.92	7.25	...	...	...	...	...
14	0.86	1.60	2.27	2.90	3.45	4.00	4.48	4.96	5.37	5.80	6.17	6.54	7.17	7.72	8.10	8.51	...	...	...	...
15	0.92	1.72	2.45	3.14	3.74	4.34	4.86	5.39	5.85	6.32	6.73	7.14	7.86	8.48	8.92	9.40	...	...	...	...
16	0.99	1.85	2.64	3.37	4.02	4.67	5.24	5.81	6.32	6.82	7.27	7.72	8.52	9.21	9.71	10.25	10.70	...	...	...
17	1.05	1.97	2.82	3.59	4.29	4.99	5.61	6.22	6.78	7.32	7.80	8.29	9.16	9.91	10.47	11.06	11.59	11.99	...	...
18	1.12	2.10	3.00	3.82	4.56	5.31	5.97	6.63	7.23	7.81	8.32	8.84	9.78	10.58	11.21	11.84	12.42	12.88	...	...
19	1.18	2.22	3.17	4.04	4.83	5.62	6.32	7.03	7.67	8.29	8.83	9.38	10.38	11.23	11.93	12.60	13.22	13.73	14.14	...
20	1.25	2.34	3.34	4.25	5.09	5.93	6.67	7.42	8.09	8.74	9.33	9.91	10.95	11.86	12.62	13.34	13.99	14.54	14.99	...
21	1.31	2.46	3.51	4.48	5.36	6.24	7.02	7.80	8.50	9.19	9.81	10.43	11.53	12.47	13.28	14.05	14.73	15.31	15.80	...
22	1.37	2.58	3.67	4.70	5.62	6.54	7.35	8.17	8.90	9.63	10.28	10.93	12.08	13.06	13.92	14.73	15.44	16.05	16.57	...
23	1.44	2.69	3.84	4.91	5.87	6.83	7.68	8.54	9.30	10.06	10.74	11.42	12.62	13.63	14.54	15.39	16.12	16.76	17.30	17.78
24	1.50	2.80	4.00	5.12	6.12	7.12	8.01	8.91	9.69	10.48	11.19	11.90	13.15	14.18	15.15	16.03	16.77	17.44	18.00	18.40
25	1.56	2.92	4.17	5.32	6.36	7.41	8.34	9.27	10.08	10.89	11.62	12.37	13.58	14.72	15.75	16.65	17.40	18.09	18.67	19.09
30	1.86	3.48	4.96	6.32	7.58	8.78	9.86	10.94	11.85	12.76	13.71	14.55	15.98	17.28	18.40	19.40	20.22	20.92	21.32	22.00
35	2.16	4.03	5.73	7.29	8.73	10.08	11.29	12.51	13.59	14.67	15.61	16.54	18.09	19.49	20.67	21.73	22.55	23.20	23.78	...
40	2.45	4.55	6.46	8.20	9.81	11.31	12.65	13.99	15.16	16.33	17.34	18.35	19.95	21.42	22.62	23.68	24.42	25.08	...	...
45	2.73	5.07	7.18	9.10	10.83	12.48	13.93	15.37	16.62	17.86	18.92	19.99	21.60	23.12	24.29	25.28	25.90	...	...	...
50	3.02	5.59	7.87	9.94	11.80	13.59	15.13	16.67	17.98	19.28	20.37	21.47	23.12	24.59	25.69	...	...	...	...	...
55	3.29	6.07	8.54	10.77	12.72	14.65	16.26	17.89	19.23	20.59	21.70	22.82	24.45	25.82	...	...	...	...	...	...
60	3.58	6.55	9.21	11.57	13.60	15.66	17.34	19.04	20.41	21.80	22.92	24.04	...	...	...	...	...	...	...	...
	Type I Lubrication			Type II Lubrication					Type III Lubrication											

Type I: Drip (4 to 10 drops per minute), shallow bath, or manual with oil applied frequently with a brush or spout can to upper edges of all link plates when in the lower span of chain.
Type II: Rapid drip (20 drops per minute minimum), or continuous with shallow bath, disc, or slinger.
Type III: Continuous with disc, slinger, or circulating pump.

Not for Resale

Copyright ASME International
Provided by IHS under license with ASME
No reproduction or networking permitted without license from IHS

Table A4 Horsepower Ratings, Double-Pitch Power Transmission Roller Chain — No. 2080

No. of Effective Teeth in Small Spkt.	2 in. Pitch Revolutions Per Minute — Small Sprocket																			
	10	20	30	40	50	60	70	80	90	100	125	150	175	200	225	250	300	350	400	450
6	0.32	0.55	0.76	...	...	...	...	...	...	...	...	...	...	...	...	...	...	...	...	...
7	0.38	0.70	0.98	1.22	1.44	1.63	1.80	...	...	...	...	...	...	...	...	...	...	...	...	...
8	0.46	0.84	1.78	1.50	1.78	2.04	2.28	2.50	2.70	2.88	...	...	...	...	...	...	...	...	...	...
9	0.52	0.98	1.39	1.76	2.11	2.43	2.74	3.02	3.29	3.53	4.08	4.54	...	...	...	...	...	...	...	...
10	0.59	1.11	1.58	2.02	2.43	2.82	3.18	3.53	3.85	4.16	4.85	5.45	5.98	...	...	...	...	...	...	...
11	0.66	1.24	1.77	2.27	2.76	3.20	3.60	4.02	4.38	4.77	5.60	6.33	6.98	7.56	8.07	...	...	...	...	...
12	0.72	1.37	1.96	2.52	3.08	3.56	4.02	4.50	4.92	5.36	6.33	7.19	7.95	8.66	9.27	9.82	...	...	...	...
13	0.79	1.49	2.15	2.77	3.38	3.91	4.44	4.97	5.45	5.93	7.02	8.02	8.89	9.72	10.42	11.08	...	...	...	...
14	0.85	1.62	2.33	3.01	3.67	4.26	4.85	5.42	5.96	6.49	7.69	8.82	9.80	10.74	11.53	12.29	13.60	...	...	...
15	0.91	1.74	2.52	3.25	3.96	4.60	5.25	5.86	6.45	7.03	8.34	9.60	10.68	11.73	12.60	13.46	14.94	...	...	...
16	0.98	1.87	2.70	3.48	4.24	4.94	5.64	6.29	6.93	7.56	8.98	10.36	11.53	12.69	13.63	14.59	16.24	17.65	...	...
17	1.04	1.99	2.88	3.71	4.52	5.28	6.02	6.72	7.40	8.09	9.61	11.10	12.36	13.62	14.63	15.69	17.50	19.04	...	...
18	1.11	2.11	3.05	3.94	4.80	5.61	6.40	7.14	7.87	8.60	10.23	11.82	13.18	14.52	15.60	16.76	18.72	20.38	21.77	...
19	1.17	2.23	3.23	4.17	5.08	5.94	6.77	7.56	8.33	9.10	10.84	12.52	13.98	15.39	16.55	17.80	19.90	21.67	23.18	...
20	1.23	2.35	3.40	4.40	5.35	6.26	7.13	7.98	8.78	9.60	11.44	13.20	14.76	16.24	17.48	18.81	21.04	22.91	24.52	...
21	1.29	2.47	3.57	4.62	5.62	6.58	7.49	8.39	9.23	10.09	12.03	13.87	15.52	17.07	18.39	19.79	22.14	24.11	25.80	...
22	1.36	2.58	3.74	4.84	5.89	6.89	7.84	8.79	9.67	10.57	12.62	14.53	16.27	17.89	19.28	20.74	23.20	25.27	27.03	...
23	1.42	2.70	3.90	5.06	6.16	7.20	8.19	9.18	10.10	11.05	13.20	15.18	17.01	18.70	20.15	21.66	24.23	26.40	28.22	...
24	1.48	2.82	4.05	5.27	6.43	7.51	8.54	9.56	10.53	11.52	13.77	15.82	17.74	19.50	21.01	22.55	25.23	27.50	29.38	30.98
25	1.54	2.93	4.20	5.48	6.70	7.81	8.89	9.94	10.95	11.98	14.33	16.45	18.46	20.29	21.86	23.42	26.20	28.57	30.52	32.16
30	1.84	3.50	5.02	6.54	7.96	9.29	10.59	11.74	12.97	14.23	16.98	19.46	21.79	23.91	25.73	27.52	30.70	33.56	35.52	37.26
35	2.14	4.07	5.82	7.56	9.19	10.71	12.21	13.48	14.92	16.35	19.46	22.26	24.86	27.23	29.24	31.21	34.65	37.57	39.66	...
40	2.43	4.61	6.60	8.55	10.38	12.09	13.76	15.17	16.80	18.36	21.79	24.88	27.71	30.28	32.42	34.52	38.09	40.96	43.07	...
45	2.72	5.15	7.37	9.52	11.54	13.43	15.25	16.82	18.61	20.28	23.99	27.34	30.36	33.08	35.30	37.50	41.10	43.81	...	...
50	3.01	5.68	8.13	10.47	12.67	14.73	16.69	18.43	20.35	22.12	26.08	29.65	32.82	35.65	37.92	40.16	43.70	...	...	...
55	3.29	6.20	8.88	11.40	13.78	15.99	18.08	20.00	22.02	23.88	28.07	31.82	35.10	38.00	40.30	42.52	...	...	...	...
60	3.57	6.72	9.60	12.31	14.88	17.21	19.43	21.53	23.62	25.57	29.97	33.86	37.21	40.14	...	...	...	...	...	...
	Type I Lubrication						Type II Lubrication						Type III Lubrication							

Type I: Drip (4 to 10 drops per minute), shallow bath, or manual with oil applied frequently with a brush or spout can to upper edges of all link plates when in the lower span of chain.
Type II: Rapid drip (20 drops per minute minimum), or continuous with shallow bath, disc, or slinger.
Type III: Continuous with disc, slinger, or circulating pump.

Not for Resale

Copyright ASME International
Provided by IHS under license with ASME
No reproduction or networking permitted without license from IHS

Table A5 Horsepower Ratings, Double-Pitch Power Transmission Roller Chain — No. 2100

No. of Effective Teeth in Small Spkt.	2½ in. Pitch Revolutions Per Minute — Small Sprocket																			
	10	20	30	40	50	60	70	80	100	120	140	160	180	200	220	240	260	280	300	325
6	0.60	1.04	...	...	...	...	...	...	...	...	...	...	...	...	...	...	...	...	...	...
7	0.74	1.32	1.82	2.25	2.62	...	...	...	...	...	...	...	...	...	...	...	...	...	...	...
8	0.87	1.59	2.22	2.78	3.29	3.74	4.14	4.51	...	...	...	...	...	...	...	...	...	...	...	...
9	1.00	1.85	2.61	3.30	3.93	4.51	5.04	5.52	...	...	...	...	...	...	...	...	...	...	...	...
10	1.13	2.11	2.99	3.80	4.55	5.25	5.89	6.50	7.58	8.51	...	...	...	...	...	...	...	...	...	...
11	1.26	2.36	3.37	4.29	5.15	5.96	6.72	7.45	8.74	9.87	10.91	11.81	...	...	...	...	...	...	...	...
12	1.39	2.61	3.74	4.77	5.74	6.65	7.53	8.36	9.86	11.21	12.40	13.53	14.49	...	...	...	...	...	...	...
13	1.52	2.86	4.10	5.25	6.32	7.33	8.32	9.24	10.95	12.51	13.85	15.18	16.30	17.33	...	...	...	...	...	...
14	1.64	3.10	4.45	5.72	6.90	8.00	9.09	10.09	12.00	13.77	15.26	16.76	18.04	19.23	20.31	...	...	...	...	...
15	1.76	3.34	4.80	6.18	7.47	8.66	9.84	10.92	13.02	14.98	16.63	18.28	19.72	21.06	22.29	23.40	...	...	...	...
16	1.88	3.57	5.14	6.63	8.03	9.31	10.57	11.73	14.02	16.14	17.97	19.75	21.35	22.83	24.21	25.43	26.56	...	...	...
17	2.00	3.80	5.48	7.07	8.58	9.95	11.30	12.54	15.00	17.27	19.28	21.17	22.93	24.54	26.09	27.39	28.63	...	...	...
18	2.12	4.03	5.82	7.50	9.12	10.58	12.02	13.34	15.96	18.38	20.56	22.55	24.47	26.20	27.89	29.28	30.63	31.87	...	...
19	2.24	4.26	6.15	7.92	9.65	11.20	12.73	14.13	16.90	19.47	21.81	23.90	25.96	27.81	29.63	31.11	32.56	33.89	...	...
20	2.36	4.49	6.48	8.34	10.17	11.81	13.43	14.91	17.82	20.54	23.02	25.23	27.41	29.38	31.31	32.88	34.42	35.84	37.14	...
21	2.48	4.72	6.81	8.76	10.68	12.41	14.12	15.68	18.73	21.59	24.20	26.54	28.82	30.91	32.94	34.59	36.22	37.72	39.10	...
22	2.60	4.95	7.14	9.17	11.18	13.00	14.80	16.44	19.63	22.62	25.35	27.83	30.20	32.29	34.52	36.25	37.97	39.54	40.99	...
23	2.72	5.17	7.46	9.58	11.67	13.58	15.47	17.19	20.52	23.64	26.48	29.10	31.55	33.83	36.05	37.86	39.66	41.30	42.81	...
24	2.84	5.39	7.78	9.99	12.15	14.16	16.13	17.93	21.40	24.65	27.59	30.35	32.88	35.25	37.54	39.43	41.30	43.00	44.56	46.31
25	2.96	5.61	8.09	10.40	12.63	14.73	16.78	18.66	22.27	25.65	28.68	31.54	34.19	36.65	39.00	40.96	42.89	44.65	46.25	48.06
30	3.54	6.71	9.65	12.39	15.03	17.50	19.88	22.26	26.50	30.32	33.90	37.02	40.25	43.05	45.70	48.00	50.16	52.13	53.90	55.88
35	4.11	7.78	11.16	14.30	17.33	20.17	20.86	25.63	30.40	34.60	38.74	42.14	45.72	48.79	51.65	54.15	56.44	58.51	60.35	...
40	4.67	8.82	12.63	16.15	19.55	22.74	25.72	28.79	34.02	38.62	43.22	46.88	50.68	53.95	56.92	59.53	61.87	63.94	...	...
45	5.22	9.84	14.06	17.95	21.70	25.21	28.46	31.76	37.41	42.39	47.36	51.27	55.19	58.58	61.58	64.22	...	...	...	...
50	5.76	10.84	15.46	19.71	23.78	27.58	31.09	34.56	40.62	45.95	51.18	55.32	59.28	62.71	65.70	...	...	...	...	...
55	6.29	11.82	16.83	21.44	25.80	29.86	33.61	37.20	43.70	49.34	54.69	59.03	62.99	...	...	...	...	...	...	...
60	6.82	12.78	18.17	23.14	27.76	32.05	36.03	39.68	46.69	52.60	57.89	...	...	...	...	...	...	...	...	...
	Type I Lubrication							Type II Lubrication						Type III Lubrication						

Type I: Drip (4 to 10 drops per minute), shallow bath, or manual with oil applied frequently with a brush or spout can to upper edges of all link plates when in the lower span of chain.
Type II: Rapid drip (20 drops per minute minimum), or continuous with shallow bath, disc, or slinger.
Type III: Continuous with disc, slinger, or circulating pump.

Not for Resale

Copyright ASME International
Provided by IHS under license with ASME
No reproduction or networking permitted without license from IHS

Table A6 Horsepower Ratings, Double-Pitch Power Transmission Roller Chain — No. 2120

No. of Effective Teeth in Small Spkt.	3 in. Pitch Revolutions Per Minute — Small Sprocket																			
	10	20	30	40	50	60	70	80	90	100	110	120	130	140	150	160	180	200	225	250
6	1.00	...	...	...	...	...	...	...	...	...	...	...	...	...	...	...	...	...	...	...
7	1.24	2.20	3.00	3.67	...	...	...	...	...	...	...	...	...	...	...	...	...	...	...	...
8	1.47	2.67	3.70	4.59	5.38	6.08	...	...	...	...	...	...	...	...	...	...	...	...	...	...
9	1.70	3.12	4.37	5.48	6.48	7.39	8.22	8.96	...	...	...	...	...	...	...	...	...	...	...	...
10	1.93	3.56	5.02	6.34	7.55	8.66	9.68	10.62	11.48	12.28	...	...	...	...	...	...	...	...	...	...
11	2.15	3.99	5.66	7.18	8.59	9.89	11.09	12.22	13.27	14.25	15.15	15.99	...	...	...	...	...	...	...	...
12	2.37	4.42	6.29	7.98	9.60	11.08	12.47	13.77	15.00	16.14	17.21	18.22	19.16	20.04	...	...	...	...	...	...
13	2.59	4.84	6.91	8.77	10.58	12.24	13.81	15.28	16.67	17.97	19.20	20.37	21.46	22.50	23.47	24.38	...	...	...	...
14	2.80	5.25	7.52	9.54	11.54	13.38	15.11	16.75	18.29	19.75	21.13	22.45	23.68	24.87	29.98	27.03	28.95	...	...	...
15	3.01	5.66	8.12	10.30	12.49	14.49	16.39	18.18	19.87	21.48	23.00	24.47	25.84	27.15	28.40	29.58	31.75	...	...	...
16	3.22	6.06	8.71	11.06	13.42	15.58	17.63	19.57	21.42	23.16	24.82	26.43	27.94	29.37	30.74	32.05	34.45	36.62	...	...
17	3.43	6.46	9.29	11.81	14.33	16.65	18.86	20.93	22.93	24.80	26.59	28.34	29.98	31.53	33.01	34.44	37.06	39.44	...	...
18	3.64	6.86	9.86	12.55	15.23	17.71	20.06	22.27	24.41	26.41	28.33	30.20	31.96	33.63	35.22	36.76	39.58	42.16	45.02	...
19	3.85	7.25	10.42	13.28	16.12	18.75	21.24	23.59	25.86	27.99	30.03	32.02	33.89	35.68	37.37	39.01	42.02	44.79	47.86	...
20	4.05	7.64	10.98	14.01	16.99	19.77	22.40	24.89	27.28	29.54	31.70	33.80	35.78	37.68	39.47	41.20	44.39	47.34	50.60	...
21	4.25	8.03	11.53	14.73	17.86	20.77	23.55	26.17	28.68	31.06	33.34	35.54	37.63	39.63	41.52	43.34	46.70	49.81	53.25	...
22	4.45	8.41	12.08	15.45	18.72	21.76	24.67	27.43	30.06	32.56	34.95	37.25	39.44	41.53	43.52	45.43	48.95	52.21	55.82	...
23	4.65	8.79	12.62	16.16	19.56	22.75	25.78	28.67	31.41	34.03	36.53	38.92	41.21	43.39	45.47	47.46	51.14	54.54	58.32	61.62
24	4.85	9.17	13.16	16.86	20.39	23.72	26.87	29.89	32.74	35.47	38.07	40.56	42.94	45.21	47.37	49.44	53.27	56.80	60.75	64.15
25	5.05	9.54	13.69	17.55	21.20	24.67	27.96	31.09	34.05	36.88	39.58	42.16	44.64	46.99	49.23	51.37	55.35	59.00	63.11	66.60
30	6.00	11.38	16.30	20.90	25.22	29.30	33.16	36.83	40.31	43.62	46.76	49.78	52.65	55.37	57.95	60.42	64.96	69.12	73.70	77.62
35	6.96	13.18	18.83	24.10	29.05	33.70	38.08	42.24	46.16	49.86	53.41	56.78	59.95	62.95	65.81	68.54	73.48	77.97	82.81	...
40	7.91	14.94	21.29	27.16	32.72	37.89	42.75	47.34	51.66	55.74	59.59	63.24	66.67	69.90	72.95	75.85	81.06	85.72	...	...
45	8.85	16.66	23.69	30.10	36.25	41.90	47.20	52.17	56.83	61.22	65.34	69.22	72.87	76.28	79.45	82.46	87.81	92.48	...	...
50	9.78	18.34	26.03	32.94	39.65	45.75	51.44	56.75	61.72	66.37	70.71	74.77	78.58	82.10	85.36	88.40	...	...	...	...
55	10.70	19.99	28.31	35.71	42.94	49.45	55.45	61.10	66.34	71.20	75.72	79.92	83.80	87.40	...	...	...	...	...	...
60	11.61	21.61	30.54	38.46	46.12	53.00	59.24	65.25	70.70	75.74	80.39	84.68	...	...	...	...	...	...	...	...
	Type I Lubrication				Type II Lubrication						Type III Lubrication									

Type I: Drip (4 to 10 drops per minute), shallow bath, or manual with oil applied frequently with a brush or spout can to upper edges of all link plates when in the lower span of chain.
Type II: Rapid drip (20 drops per minute minimum), or continuous with shallow bath, disc, or slinger.
Type III: Continuous with disc, slinger, or circulating pump.

Not for Resale

Table A7 Recommended Maximum RPM for Sprockets

No. of Effective Teeth	Chain No. (Pitch, in.) 2040 (1)	2050 (1¼)	2060 (1½)	2080 (2)	2100 (2½)	2120 (3)
6	85	60	45	30	20	15
7	200	145	110	70	50	40
8	320	230	175	110	80	60
9	440	315	240	150	110	80
10	555	400	300	190	135	105
11	660	475	360	225	160	125
12	755	545	410	260	185	145
13	850	610	460	290	210	165
14	930	670	505	320	230	180
15	1000	720	540	345	245	195
16	1060	765	575	365	260	205
17	1115	805	605	385	275	215
18	1160	835	630	400	285	225
19	1200	865	650	415	295	230
20	1230	890	670	425	305	235
21	1260	910	685	435	310	240
22	1280	925	695	440	315	245
23	1300	935	705	445	320	250
24	1310	945	710	450	325	250
25	1320	950	715	450	330	255
30	1310	945	715	450	325	250
35	1255	905	680	435	310	240
40	1160	835	630	400	285	220
45	1040	750	565	360	255	200
50	910	655	495	315	225	175
55	770	555	415	265	185	145
60	615	445	335	210	150	120

Copyright ASME International
Provided by IHS under license with ASME
No reproduction or networking permitted without license from IHS
Not for Resale

ASME B29.4

1 Roller Chains 73

2 Attachment Link Plates for Double-Pitch Conveyor Chains, Small Roller Series and Large Roller Series 78

3 Sprockets for Double-Pitch Conveyor Roller Chain 84

Figures

1 Double-Pitch Conveyor Roller Chain 74
2 Double-Pitch Conveyor Roller Chain Components 74
3 General Chain Dimensions 75
4 Offset Link Plate 75
5 Attachment Link Plates for Double-Pitch Conveyor Chains 78
6 Sprocket Tooth Section Profile 85
7 Sprocket Diameters, Small Roller Series 86
8 Sprocket Diameters, Large Roller Series 88

Tables

1A, B General Chain Dimensions, Measuring Loads, and Ultimate Tensile Strengths 76
2A, B Ultimate Dimensional Limits for Interchangeability 77
3 Dimensional Limits for Straight Link Plate Extension With One Attachment Hole 79
4 Dimensional Limits for Straight Link Plate Extension With Two Attachment Holes 80
5 Dimensional Limits for Bent Link Plate Extension With One Attachment Hole 81
6 Dimensional Limits for Bent Link Plate Extension With Two Attachment Holes 82
7 Dimensional Limits for Conveyor Chain With Extended Pin 83
8A, B Sprocket Tooth Section Profile Dimensions 85
9A, B Minus Tolerances on the Bottom or Caliper Diameters of Sprockets for Various Numbers of Effective Teeth 89
10 Sprocket Factors, Small Roller Series 90
11 Sprocket Factors, Large Roller Series 93

Nonmandatory Appendix

A Supplementary Information 94

Copyright ASME International
Provided by IHS under license with ASME
No reproduction or networking permitted without license from IHS
Not for Resale

DOUBLE-PITCH CONVEYOR ROLLER CHAINS, ATTACHMENTS, AND SPROCKETS

1 ROLLER CHAINS

1.1 Nomenclature

The following definitions are illustrated in Figs. 1 and 2.

connecting link (cotter pin type): an outside link consisting of a pin link plate *E*, two pins *G–G*, a detachable pin link plate *D*, and two cotter pins *H–H*.

double-pitch conveyor roller chain: a series of alternately assembled roller links and pin links in which the pins articulate inside the bushings and the rollers are free to turn on the bushings. The pitch of link plates is twice that of link plates of the base series chain. Pin link plates and roller link plates have identical, straight-edged contours. Chains having extra thickness link plates are intended for use when the conveyed load is carried by the link plate edges. Chains having large rollers are intended for use when the conveyed load is carried by the rollers.

offset link (large roller series, cotter pin type): a link consisting of two offset link plates *I–I*, a bushing *B*, a roller of the large roller series C_L, a removable pin *J*, and a cotter pin *H*.

offset link (small roller series, cotter pin type): a link consisting of two offset link plates *I–I*, a bushing *B*, a roller of the standard roller series C_S, a removable pin *J*, and a cotter pin *H*.

pin link (riveted type): an outside link consisting of two pin link plates *E–E* and two pins *F–F*.

roller link (large roller series): an inside link consisting of two roller link plates *A–A*, two bushings *B–B*, and two rollers of the large roller series C_L–C_L.

roller link (small roller series): an inside link consisting of two roller link plates *A–A*, two bushings *B–B*, and two rollers of the small roller series C_S–C_S.

1.2 General Proportions

Sizes of the various chain components, and assembled length and strength, are approximately proportional to pitch *P* as follows.

(a) The roller diameter for the small roller series equals approximately 0.312*P*, and for the large roller series it equals approximately 0.625*P*.

(b) The *chain width* is defined as the distance between roller link plates and equals approximately 0.312*P*.

(c) The pin diameter equals approximately 0.156*P*.

(d) The thickness of link plates for regular series chain sizes not designated H equals approximately 0.062*P*.

For heavy series chain sizes designated H, the link plate thickness equals approximately:

$$0.062 \times \text{pitch in inches} + 0.031 \text{ in.} = \text{inches}$$
$$0.062 \times \text{pitch in millimeters} + 0.79 \text{ mm} = \text{millimeters}$$

(e) The maximum width of link plates equals 0.475*P* for both pin link and roller link plates that have identical, straight-edged contours.

1.3 Numbering System — Standard Chain Numbers

Conveyor chain of the small roller series is identified by the prefix C, followed by the numerical sum of 2000 and the standard base series chain number. Identification of conveyor chain of the large roller series is the same as that of the small roller series, except the right-hand digit is 2 instead of 0. The addition of the suffix H designates heavy thickness link plates.

EXAMPLES:

(1) Double-pitch conveyor roller chain of the small roller series, Chain No. C2040, uses the same pins, bushings, and rollers as Chain No. 40, but has double the pitch.

(2) Double-pitch conveyor roller chain of the large roller series, Chain No. C2062H, uses the same pins and bushings as Chain No. 60H, but has double the pitch and rollers of twice the diameter.

1.4 Chain Strength Requirements

1.4.1 Minimum Ultimate Tensile Strength. Single strand chains meeting the requirements of this Standard will have a minimum ultimate tensile strength equal to or greater than the values listed in Tables 1A and 1B.

Minimum ultimate tensile strength (M.U.T.S.) for chain covered by this Standard is the minimum force at which an unused, undamaged chain could fail when subjected to a single tensile loading test.

WARNING: The minimum ultimate tensile strength is NOT a "working load." The M.U.T.S. greatly exceeds the maximum force that may be applied to the chain.

(a) Test Procedure. A tensile force is slowly applied, in uniaxial direction, to the ends of the chain sample.

(b) The Tensile Test Is a Destructive Test. Even though the chain may not visibly fail when subjected to the minimum ultimate tensile force, it will have been damaged and will be unfit for service.

Copyright ASME International
Provided by IHS under license with ASME
No reproduction or networking permitted without license from IHS
Not for Resale

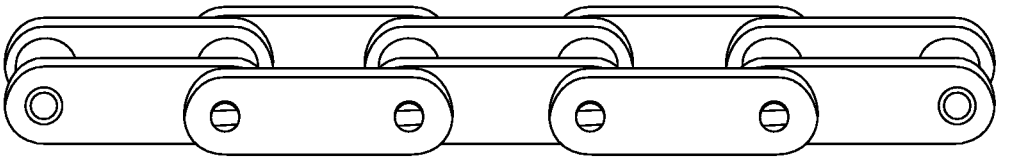

(a) Double-Pitch Conveyor Roller Chain, Small Roller Series

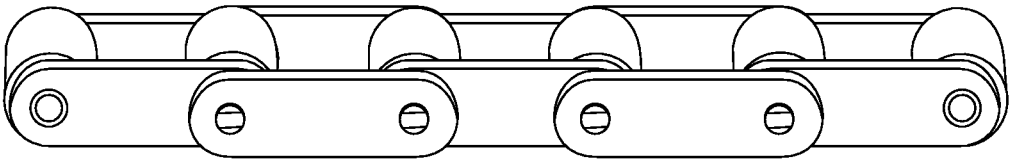

(b) Double-Pitch Conveyor Roller Chain, Large Roller Series

Fig. 1 Double-Pitch Conveyor Roller Chain

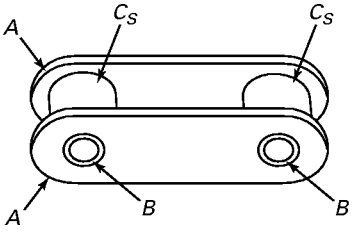

(a) Roller Link (Small Roller Series)

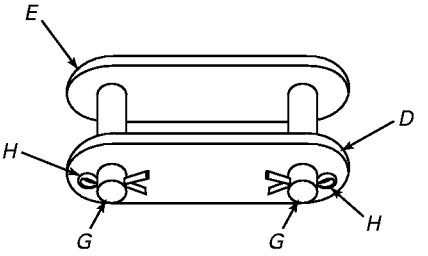

(d) Connecting Link (Cotter Pin Type)

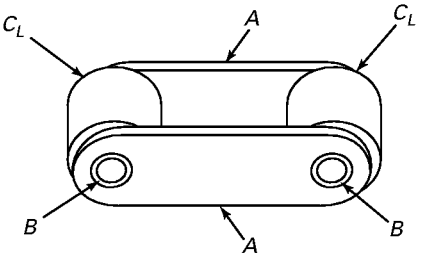

(b) Roller Link (Large Roller Series)

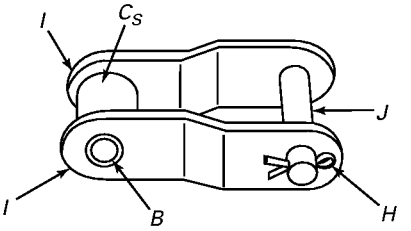

(e) Offset Link (Small Roller Series, Cotter Pin Type)

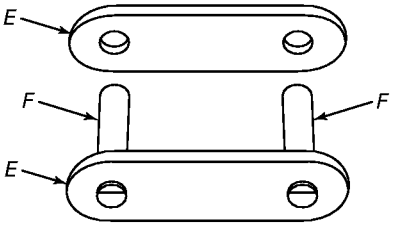

(c) Pin Link (Riveted Type)

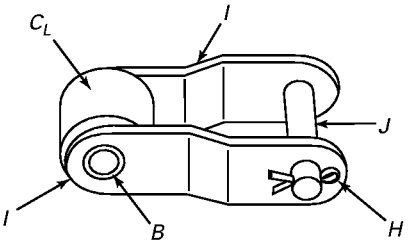

(f) Offset Link (Large Roller Series, Cotter Pin Type)

Fig. 2 Double-Pitch Conveyor Roller Chain Components

Copyright ASME International
Provided by IHS under license with ASME
No reproduction or networking permitted without license from IHS
Not for Resale

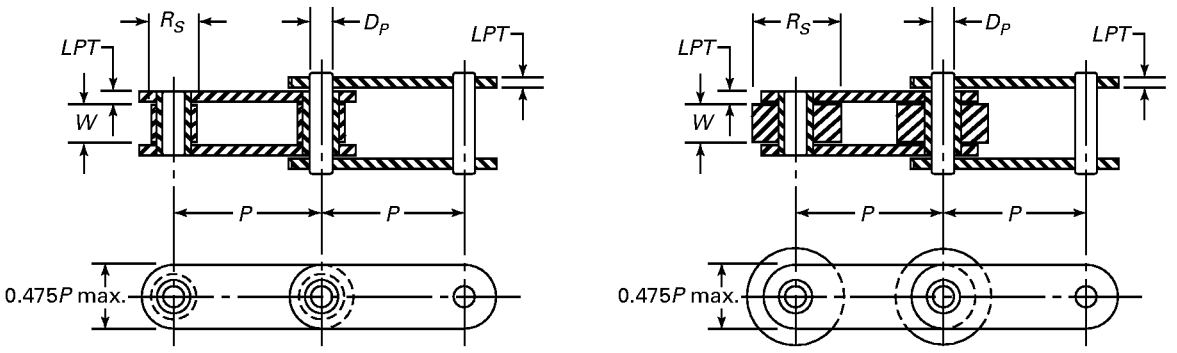

(a) Small Roller Series

(b) Large Roller Series

D_p = pin diameter
LPT = link plate thickness
P = chain pitch
R_L = roller diameter, large roller series
R_S = roller diameter, small roller series
W = chain width between roller link plates

Fig. 3 General Chain Dimensions

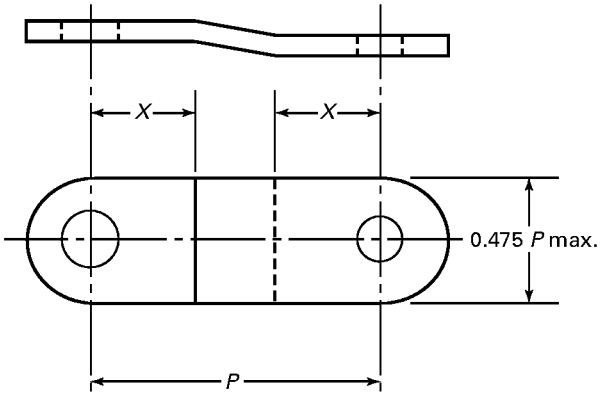

Fig. 4 Offset Link Plate

1.4.2 Chain Preloading. Chains conforming to this Standard should be preloaded during manufacturing by applying a tensile force equal to a minimum of 30% of the M.U.T.S. given in Table 1A or 1B. The amount of preload, if any, is at the discretion of the manufacturer or by agreement between the manufacturer and the user.

1.5 Tolerance for Chain Length

New chains, under standard measuring load, shall not be underlength. Overlength tolerance is 0.016 in./ft (1.33 mm/m).

1.6 Measuring Load

Measuring load is the load under which the chain is to be measured for length. It is equal to 1% of the minimum ultimate tensile strength, with a minimum of 31 lb (138 N). Length measurements are to be taken over a length of at least 12 in. (300 mm).

1.7 General Chain Dimensions

See Fig. 3, and Tables 1A and 1B.

1.8 Dimensional Limits for Interchangeability of Links

To assure interchangeability of links produced by different makers of chain, the following standard maximum and minimum dimensions are adopted (see also Tables 2A and 2B). They are not the actual dimensions to be used in manufacturing, but rather the limiting dimensions, maximum and minimum, within which it is necessary to keep to assure the desired interchangeability. (The following values are in conventional units.)

(a) The minimum distance between roller link plates is the nominal width of the chain minus the quantity (0.002 + 0.003 × pitch/2).

(b) Maximum pin diameter: see Tables 2A and 2B.

(c) Minimum hole diameter in bushing: see Tables 2A and 2B.

(d) Maximum overall width of roller link = nominal width of chain + (2.12 × nominal link plate thickness).

(e) Minimum distance between pin link plates = maximum overall width of roller link + 0.002.

(f) Standard offset links (see Fig. 4) are made to accommodate chains having link plates with a maximum height equal to 0.475 × pitch. Therefore,

$$X\ (\text{min.}) = 0.24P + 0.030$$

where

P = chain pitch

Copyright ASME International
Provided by IHS under license with ASME
No reproduction or networking permitted without license from IHS
Not for Resale

Table 1A General Chain Dimensions, Measuring Loads, and Ultimate Tensile Strengths, in. and lb

Standard Chain No.	Chain Pitch P	Roller Diameter		Nominal Width W [Note (1)]	Pin Diameter D_p	Link Plate Thickness LPT	Measuring Load, lb	M.U.T.S., lb
		Small R_s	Large R_L					
C2040, C2042	1.000	0.312	0.625	0.312	0.156	0.060	31	3,125
C2050, C2052	1.250	0.400	0.750	0.375	0.200	0.080	49	4,880
C2060, C2062	1.500	0.469	0.875	0.500	0.234	0.094	70	7,030
C2060H, C2062H	1.500	0.469	0.875	0.500	0.234	0.125	70	7,030
C2080, C2082	2.000	0.625	1.125	0.625	0.312	0.125	125	12,500
C2080H, C2082H	2.000	0.625	1.125	0.625	0.312	0.156	125	12,500
C2100, C2102	2.500	0.750	1.562	0.750	0.375	0.156	195	19,530
C2100H, C2102H	2.500	0.750	1.562	0.750	0.375	0.187	195	19,530
C2120, C2122	3.000	0.875	1.750	1.000	0.437	0.187	281	28,125
C2120H, C2122H	3.000	0.875	1.750	1.000	0.437	0.219	281	28,125
C2160, C2162	4.000	1.125	2.250	1.250	0.562	0.250	500	50,000
C2160H, C2162H	4.000	1.125	2.250	1.250	0.562	0.281	500	50,000

NOTE:
(1) See Table 2A for decimal minimum dimensions.

Table 1B General Chain Dimensions, Measuring Loads, and Ultimate Tensile Strengths, mm and N

Standard Chain No.	Chain Pitch P	Roller Diameter		Nominal Width W [Note (1)]	Pin Diameter D_p	Link Plate Thickness LPT	Measuring Load, N	M.U.T.S., N
		Small R_s	Large R_L					
C2040, C2042	22.23	7.92	15.88	7.92	3.96	1.52	138	13 900
C2050, C2052	31.75	10.16	19.05	9.52	5.08	2.03	218	21 710
C2060, C2062	38.10	11.91	22.23	12.70	5.94	2.39	311	31 270
C2060H, C2062H	38.10	11.91	22.23	12.70	5.94	3.18	311	31 270
C2080, C2082	50.80	15.88	28.58	15.88	7.93	3.18	556	55 600
C2080H, C2082H	50.80	15.88	28.58	15.88	7.93	3.96	556	55 600
C2100, C2102	63.50	19.05	39.67	19.05	9.53	3.96	867	86 870
C2100H, C2102H	63.50	19.05	39.67	19.05	9.53	4.75	867	86 870
C2120, C2122	76.20	22.23	44.45	25.40	11.10	4.75	1 250	125 100
C2120H, C2122H	76.20	22.23	44.45	25.40	11.10	5.56	1 250	125 100
C2160, C2162	101.60	28.58	57.15	31.75	14.27	6.35	2 224	222 400
C2160H, C2162H	101.60	28.58	57.15	31.75	14.27	7.14	2 224	222 400

NOTE:
(1) See Table 2B for decimal minimum dimensions.

Copyright ASME International
Provided by IHS under license with ASME
No reproduction or networking permitted without license from IHS
Not for Resale

Table 2A Ultimate Dimensional Limits for Interchangeability, in.

Standard Chain No.	Chain Pitch *P*	Related B29.1 Chain No.	Roller Diameter		Distance Between Roller Link Plates *W*, Min.	Width of Roller Link, Max.	Distance Between Pin Link Plates, Min.	Pin Diameter, Max.	Bushing Inner Diameter, Min.	Value of *x* for Offset Plate (Fig. 2), Min.
			Small R_s, Max.	Large R_L, Max.						
C2040, C2042	1.000	40	0.312	0.625	0.309	0.440	0.442	0.1567	0.1575	0.270
C2050, C2052	1.250	50	0.400	0.750	0.370	0.545	0.547	0.2004	0.2016	0.330
C2060, C2062	1.500	60	0.469	0.875	0.495	0.699	0.701	0.2346	0.2354	0.390
C2060H, C2062H	1.500	60H	0.469	0.875	0.495	0.765	0.767	0.2346	0.2354	0.390
C2080, C2082	2.000	80	0.625	1.125	0.620	0.890	0.892	0.3126	0.3134	0.510
C2080H, C2082H	2.000	80H	0.625	1.125	0.620	0.956	0.958	0.3126	0.3134	0.510
C2100, C2102	2.500	100	0.750	1.562	0.744	1.081	1.083	0.3756	0.3764	0.630
C2100H, C2102H	2.500	100H	0.750	1.562	0.744	1.146	1.148	0.3756	0.3764	0.630
C2120, C2122	3.000	120	0.875	1.750	0.993	1.396	1.398	0.4374	0.4386	0.750
C2120H, C2122H	3.000	120H	0.875	1.750	0.993	1.464	1.466	0.4374	0.4386	0.750
C2160, C2162	4.000	160	1.125	2.250	1.242	1.780	1.782	0.5626	0.5634	0.990
C2160H, C2162H	4.000	160H	1.125	2.250	1.242	1.846	1.848	0.5626	0.5634	0.990

Table 2B Ultimate Dimensional Limits for Interchangeability, mm

Standard Chain No.	Chain Pitch *P*	Related B29.1 Chain No.	Roller Diameter		Distance Between Roller Link Plates *W*, Min.	Width of Roller Link, Max.	Distance Between Pin Link Plates, Min.	Pin Diameter, Max.	Bushing Inner Diameter, Min.	Value of *x* for Offset Plate (Fig. 2), Min.
			Small R_s, Max.	Large R_L, Max.						
C2040, C2042	25.40	40	7.92	15.88	7.85	11.18	11.23	3.98	4.00	6.86
C2050, C2052	31.75	50	10.16	19.05	9.40	13.84	13.89	5.09	5.12	8.38
C2060, C2062	38.10	60	11.91	22.22	12.58	17.75	17.81	5.96	5.98	9.91
C2060H, C2062H	38.10	60H	11.91	22.22	12.58	19.43	19.48	5.96	5.98	9.91
C2080, C2082	50.80	80	15.88	28.58	15.75	22.61	22.66	7.94	7.96	12.95
C2080H, C2082H	50.80	80H	15.88	28.58	15.75	24.28	24.33	7.94	7.96	12.95
C2100, C2102	63.50	100	19.05	39.67	18.90	27.46	27.51	9.54	9.56	16.00
C2100H, C2102H	63.50	100H	19.05	39.67	18.90	29.11	29.16	9.54	9.56	16.00
C2120, C2122	76.20	120	22.22	44.45	25.23	35.46	35.51	11.11	11.14	19.05
C2120H, C2122H	76.20	120H	22.22	44.45	25.23	37.18	37.24	11.11	11.14	19.05
C2160, C2162	101.60	160	28.58	57.15	31.55	45.21	45.26	14.29	14.31	25.15
C2160H, C2162H	101.60	160H	28.58	57.15	31.55	46.89	46.94	14.29	14.31	25.15

Copyright ASME International
Provided by IHS under license with ASME
No reproduction or networking permitted without license from IHS
Not for Resale

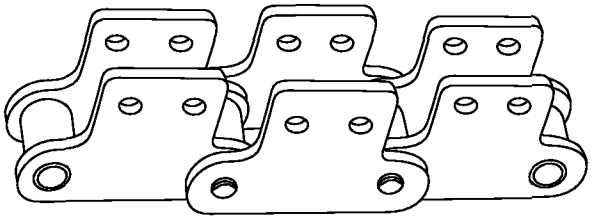

(a) Straight Link Plate Extensions

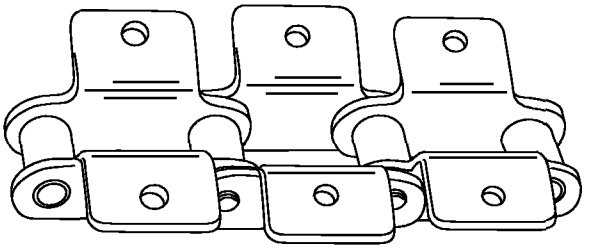

(b) Bent Link Plate Extensions

Fig. 5 Attachment Link Plates for Double-Pitch Conveyor Chains

2 ATTACHMENT LINK PLATES FOR DOUBLE-PITCH CONVEYOR CHAINS, SMALL ROLLER SERIES AND LARGE ROLLER SERIES

2.1 Nomenclature

Attachment link plates for conveyor chains, identical for the small roller and large roller series, are of two principal kinds: straight link plate extension or bent link plate extension (see Fig. 5). Extensions have a single hole or two holes, and are assembled on one or both sides of the chain as follows:

(a) straight link plate extension, single hole, one side of the chain;

(b) straight link plate extension, single hole, both sides of the chain;

(c) straight link plate extension, two holes, one side of the chain;

(d) straight link plate extension, two holes, both sides of the chain;

(e) bent link plate extension, single hole, one side of the chain;

(f) bent link plate extension, single hole, both sides of the chain;

(g) bent link plate extension, two holes, one side of the chain;

(h) bent link plate extension, two holes, both sides of the chain.

2.2 General Proportions

Principal dimensions conform approximately to the following formulas. It is recommended that these formulas be applied when extending these standards to additional sizes of chain.

(a) Distance from centerline of single hole in straight link plate extension to pitch line

$$D = 0.438 \times \text{chain pitch}$$

(b) Distance from centerlines of two holes in straight link plate extension to pitch line

$$D = 0.500 \times \text{chain pitch}$$

(c) Distance from centerline of single hole or two holes in bent link plate extension to chain centerline

$$D = 0.500 \times \text{chain pitch}$$

(d) Distance from top of bent link plate extension to pitch line

$$C = 0.375 \times \text{chain pitch}$$

(e) Distance between two holes in straight or bent link plate extension

$$H = 0.375 \times \text{chain pitch}$$

(f) Angle of bend of link plate extension = 90 deg

(g) Diameter of pin extension

$$D_p = \text{nominal diameter of chain pin}$$

(h) Length of pin extension

$$L = 0.375 \times \text{chain pitch}$$

2.3 Tolerance for Chain Length

New chains with attachments, under standard measuring load, may be overlength by 0.031 in./ft (2.58 mm/m), but shall not be underlength.

2.4 Dimensional Limits for Interchangeability of Extensions

(a) For straight link plate extensions with one attachment hole, small roller series, see Table 3.

(b) For straight link plate extensions with two attachment holes, small roller series, see Table 4.

(c) For bent link plate extensions with one attachment hole, small roller series, see Table 5.

(d) For bent link plate extensions with two attachment holes, small roller series, see Table 6.

(e) For extended pins, small and large roller series, see Table 7.

Copyright ASME International
Provided by IHS under license with ASME
No reproduction or networking permitted without license from IHS

Not for Resale

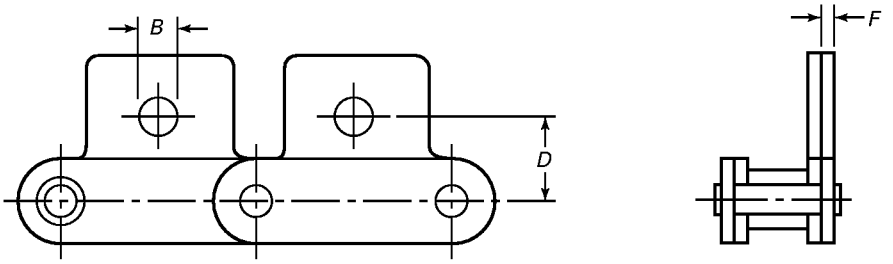

(a) Straight Link Plate Extensions on One Side of Chain, Small Roller Series

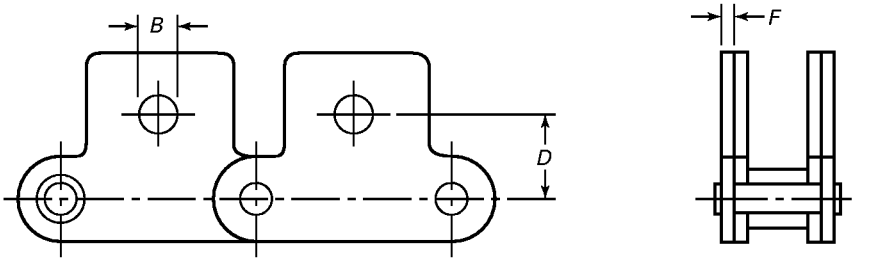

(b) Straight Link Plate Extensions on Both Sides of Chain, Small Roller Series

Table 3 Dimensional Limits for Straight Link Plate Extension With One Attachment Hole

	Customary Units			Metric Units		
Standard Chain No.	*B*, Min., in.	*D*, in.	*F*, in.	*B*, Min., mm	*D*, mm	*F*, mm
C2040, C2042	0.200	0.438	0.060	5.08	11.12	1.52
C2050, C2052	0.261	0.562	0.080	6.63	14.27	2.03
C2060, C2062	0.323	0.688	0.094	8.20	17.48	2.39
C2060H, C2062H	0.323	0.688	0.125	8.20	17.48	3.18
C2080, C2082	0.386	0.875	0.125	9.80	22.22	3.18
C2080H, C2082H	0.386	0.875	0.156	9.80	22.22	3.96
C2100, C2102	0.516	1.125	0.156	13.11	28.58	3.96
C2100H, C2102H	0.516	1.125	0.188	13.11	28.58	4.78
C2120, C2122	0.578	1.312	0.188	14.68	33.32	4.78
C2120H, C2122H	0.578	1.312	0.219	14.68	33.32	5.56
C2160, C2162	0.766	1.750	0.219	19.46	44.45	5.56
C2160H, C2162H	0.766	1.750	0.281	19.46	44.45	7.14

GENERAL NOTE: Dimensional limits of attachment link plates for conveyor chains of the large roller series, not illustrated, are identical to those for conveyor chains of the small roller series.

Copyright ASME International
Provided by IHS under license with ASME
No reproduction or networking permitted without license from IHS
Not for Resale

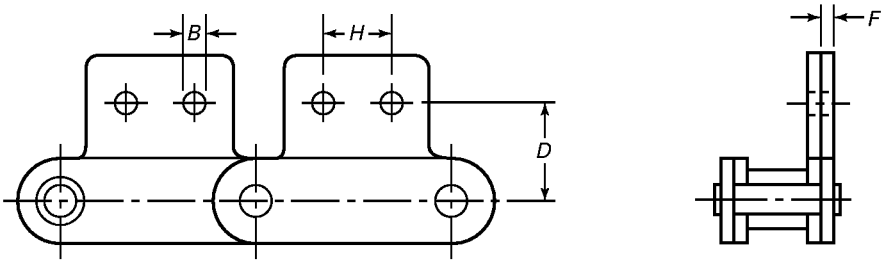

(a) Straight Link Plate Extensions on One Side of Chain, Small Roller Series

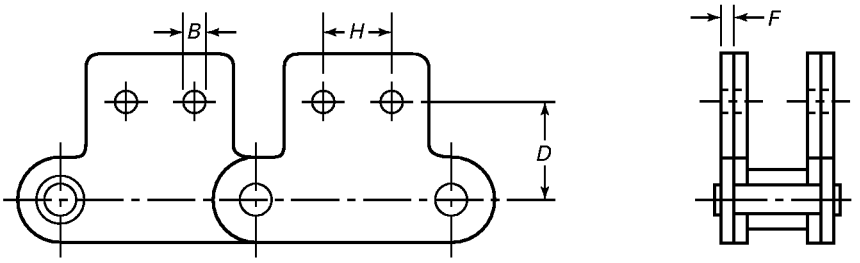

(b) Straight Link Plate Extensions on Both Sides of Chain, Small Roller Series

Table 4 Dimensional Limits for Straight Link Plate Extension With Two Attachment Holes

	Customary Units				Metric Units			
Standard Chain No.	*B*, Min., in.	*D*, in.	*H*, in.	*F*, in.	*B*, Min., mm	*D*, mm	*H*, mm	*F*, mm
C2040, C2042	0.131	0.531	0.375	0.060	3.33	13.49	9.52	1.52
C2050, C2052	0.200	0.625	0.469	0.080	5.08	15.88	11.91	2.03
C2060, C2062	0.200	0.750	0.562	0.094	5.08	19.05	14.27	2.39
C2060H, C2062H	0.200	0.750	0.562	0.125	5.08	19.05	14.27	3.18
C2080, C2082	0.261	1.000	0.750	0.125	6.63	25.40	19.05	3.18
C2080H, C2082H	0.261	1.000	0.750	0.156	6.63	25.40	19.05	3.96
C2100, C2102	0.323	1.250	0.938	0.156	8.20	31.75	23.83	3.96
C2100H, C2102H	0.323	1.250	0.938	0.188	8.20	31.75	23.83	4.78
C2120, C2122	0.386	1.469	1.125	0.188	9.80	37.31	28.58	4.78
C2120H, C2122H	0.386	1.469	1.125	0.219	9.80	37.31	28.58	5.56
C2160, C2162	0.516	2.000	1.500	0.219	13.11	50.80	38.10	5.56
C2160H, C2162H	0.516	2.000	1.500	0.281	13.11	50.80	38.10	7.14

GENERAL NOTE: Dimensional limits of attachment link plates for conveyor chains of the large roller series, not illustrated, are identical to those for conveyor chains of the small roller series.

Copyright ASME International
Provided by IHS under license with ASME
No reproduction or networking permitted without license from IHS
Not for Resale

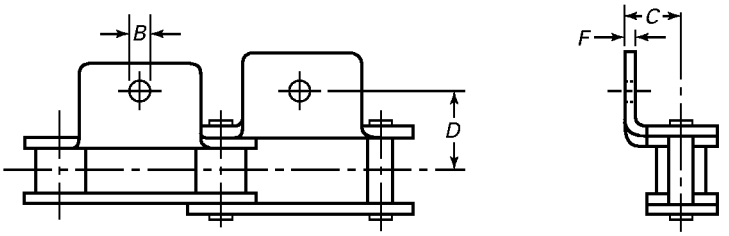

(a) Bent Link Plate Extensions on One Side of Chain, Small Roller Series

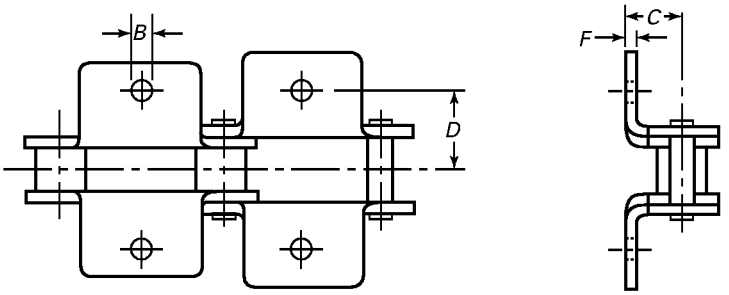

(b) Bent Link Plate Extensions on Both Sides of Chain, Small Roller Series

Table 5 Dimensional Limits for Bent Link Plate Extension With One Attachment Hole

	Customary Units				Metric Units			
Standard Chain No.	*B*, Min., in.	*C*, in.	*D*, in.	*F*, in.	*B*, Min., mm	*C*, mm	*D*, mm	*F*, mm
C2040, C2042	0.131	0.359	0.500	0.060	3.33	9.12	12.70	1.52
C2050, C2052	0.200	0.438	0.625	0.080	5.08	11.13	15.88	2.03
C2060, C2062	0.200	0.578	0.844	0.094	5.08	14.68	21.44	2.39
C2060H, C2062H	0.200	0.578	0.844	0.125	5.08	14.68	21.44	3.18
C2080, C2082	0.261	0.750	1.094	0.125	6.63	19.05	27.79	3.18
C2080H, C2082H	0.261	0.750	1.094	0.156	6.63	19.05	27.79	3.96
C2100, C2102	0.323	0.922	1.312	0.156	8.20	23.42	33.32	3.96
C2100H, C2102H	0.323	0.922	1.312	0.188	8.20	23.42	33.32	4.78
C2120, C2122	0.386	1.094	1.562	0.188	9.80	27.79	39.67	4.78
C2120H, C2122H	0.386	1.094	1.562	0.219	9.80	27.79	39.67	5.56
C2160, C2162	0.516	1.438	2.062	0.219	13.11	36.53	52.37	5.56
C2160H, C2162H	0.516	1.438	2.062	0.281	13.11	36.53	52.37	7.14

GENERAL NOTE: Dimensional limits of attachment link plates for conveyor chains of the large roller series, not illustrated, are identical to those for conveyor chains of the small roller series.

Copyright ASME International
Provided by IHS under license with ASME
No reproduction or networking permitted without license from IHS

Not for Resale

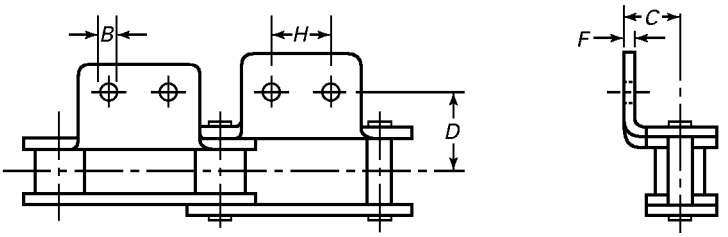

(a) Bent Link Plate Extensions on One Side of Chain, Small Roller Series

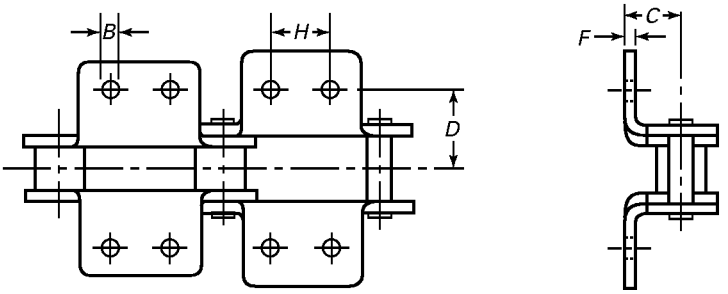

(b) Bent Link Plate Extensions on Both Sides of Chain, Small Roller Series

Table 6 Dimensional Limits for Bent Link Plate Extension With Two Attachment Holes

	Customary Units					Metric Units				
Standard Chain No.	*B*, Min., in.	*C*, in.	*D*, in.	*H*, in.	*F*, in.	*B*, Min., mm	*C*, mm	*D*, mm	*H*, mm	*F*, mm
C2040, C2042	0.131	0.359	0.500	0.375	0.060	3.33	9.12	12.70	9.52	1.52
C2050, C2052	0.200	0.438	0.625	0.469	0.080	5.08	11.13	15.88	11.91	2.03
C2060, C2062	0.200	0.578	0.844	0.562	0.094	5.08	14.68	21.44	14.27	2.39
C2060H, C2062H	0.200	0.578	0.844	0.562	0.125	5.08	14.68	21.44	14.27	3.18
C2080, C2082	0.261	0.750	1.094	0.750	0.125	6.63	19.05	27.79	19.05	3.18
C2080H, C2082H	0.261	0.750	1.094	0.750	0.156	6.63	19.05	27.79	19.05	3.96
C2100, C2102	0.323	0.922	1.312	0.938	0.156	8.20	23.42	33.32	23.83	3.96
C2100H, C2102H	0.323	0.922	1.312	0.938	0.188	8.20	23.42	33.32	23.83	4.78
C2120, C2122	0.386	1.094	1.562	1.125	0.188	9.80	27.79	39.67	28.58	4.78
C2120H, C2122H	0.386	1.094	1.562	1.125	0.219	9.80	27.79	39.67	28.58	5.56
C2160, C2162	0.516	1.438	2.062	1.500	0.219	13.11	36.53	52.37	38.10	5.56
C2160H, C2162H	0.516	1.438	2.062	1.500	0.281	13.11	36.53	52.37	38.10	7.14

GENERAL NOTE: Dimensional limits of attachment link plates for conveyor chains of the large roller series, not illustrated, are identical to those for conveyor chains of the small roller series.

Copyright ASME International
Provided by IHS under license with ASME
No reproduction or networking permitted without license from IHS
Not for Resale

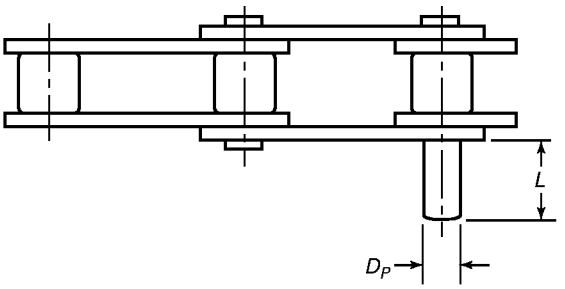

(a) Extended Pin, Small Roller Series

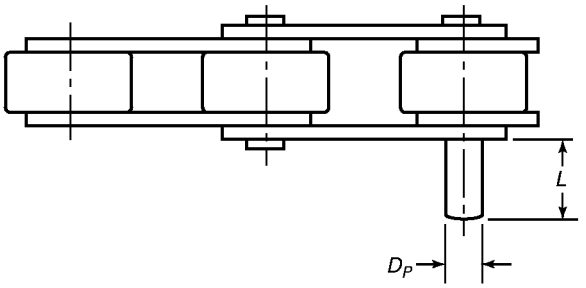

(b) Extended Pin, Large Roller Series

Table 7 Dimensional Limits for Conveyor Chain With Extended Pin

	Customary Units			Metric Units		
Standard Chain No.	Pitch, in.	D_p, in.	L, in.	Pitch, mm	D_p, mm	L, mm
C2040, C2042	1.000	0.156	0.375	25.40	3.96	9.52
C2050, C2052	1.250	0.200	0.469	31.75	5.08	11.91
C2060, C2062	1.500	0.234	0.562	38.10	5.94	14.27
C2060H, C2062H	1.500	0.234	0.562	38.10	5.94	14.27
C2080, C2082	2.000	0.312	0.750	50.80	7.92	19.05
C2080H, C2082H	2.000	0.312	0.750	50.80	7.92	19.05
C2100, C2102	2.500	0.375	0.938	63.50	9.52	23.62
C2100H, C2102H	2.500	0.375	0.938	63.50	9.52	23.62
C2120, C2122	3.000	0.437	1.125	76.20	11.10	28.58
C2120H, C2122H	3.000	0.437	1.125	76.20	11.10	28.58
C2160, C2162	4.000	0.562	1.500	101.60	14.27	38.10
C2160H, C2162H	4.000	0.562	1.500	101.60	14.27	38.10

Copyright ASME International
Provided by IHS under license with ASME
No reproduction or networking permitted without license from IHS

Not for Resale

3 SPROCKETS FOR DOUBLE-PITCH CONVEYOR ROLLER CHAIN

Sprocket dimensional design for small roller series conveyor chain is the same as for the base series chain, except for necessary changes in diametral dimensions. Sprocket tooth section profile design for large roller series conveyor chain is the same as for the base series chain having the same pitch and roller diameter, 1.000 in. (25.4 mm) through 2.500 in. (63.5 mm) pitch. It should be noted that large roller series conveyor chains, 3.000 in. (76.2 mm) and 4.000 in. (101.6 mm) pitch, have roller diameters not conforming exactly to the proportions established for base series chains.

3.1 Types of Sprockets

See para. 3.1 and Fig. 4 in B29.1 for types of sprockets.

3.2 Sprocket Tooth Section Profile and Dimensions

Figure 6, and Tables 8A and 8B, depict tooth section profile and dimensions. The nomenclature used is given below. The sprocket chamfer dimensions g and h are noncritical and are given only as a guide for general design proportions.

g = width of chamfer
= $0.062P$ (but not to exceed $W/3$)
h = depth of chamfer = $0.25P$
MHD = maximum hub diameter
P = chain pitch
R_c = chamfer radius
= $0.532P$ (approximately tangent to side)
r_f max. = fillet radius
= $0.02P$ for maximum hub diameter (but not to exceed 0.040 in. or 1.02 mm)
t max. = maximum flange thickness
= $0.93W$ in inches − 0.006 in.
= $0.93W$ in millimeters − 0.15 mm
W = chain width

3.3 Diameters and Measuring Dimensions

3.3.1 Small Roller Series. See Fig. 7.

(a) Effective teeth are shown in solid lines. An "extra" set of tooth spaces is shown in broken lines.

(b) Sprockets for double-pitch conveyor chains, small roller series, may have one or two sets of effective teeth, i.e., teeth that engage chain rollers in one revolution of the sprocket. A sprocket is single-cut if it has only one set of effective teeth. A double-cut sprocket has two sets of effective teeth. Tooth spaces of the second set are located midway between those of the first.

(c) Double-cut sprockets with an odd number of actual teeth, such as 21, and therefore with half as many effective teeth, $10\frac{1}{2}$, provide automatic hunting, each actual tooth engaging a chain roller once during two revolutions of such a sprocket.

(d) Double-cut sprockets with an even number of actual teeth have an integral number of effective teeth and cannot provide automatic hunting, because only one set of effective teeth can engage chain rollers, regardless of how many revolutions the sprocket may have made. Manual shifting of the chain by one-half effective tooth is necessary to provide distribution of wear to the previously inactive set of teeth.

3.3.2 Large Roller Series. See Fig. 8.

3.4 Sprocket Tolerances

See Tables 9A and 9B. See Tables 8A and 8B of ASME B29.1 for maximum eccentricity and face runout tolerances for commercial sprockets.

3.5 Tabulation of Diameters

See Tables 10 and 11.

Copyright ASME International
Provided by IHS under license with ASME
No reproduction or networking permitted without license from IHS
Not for Resale

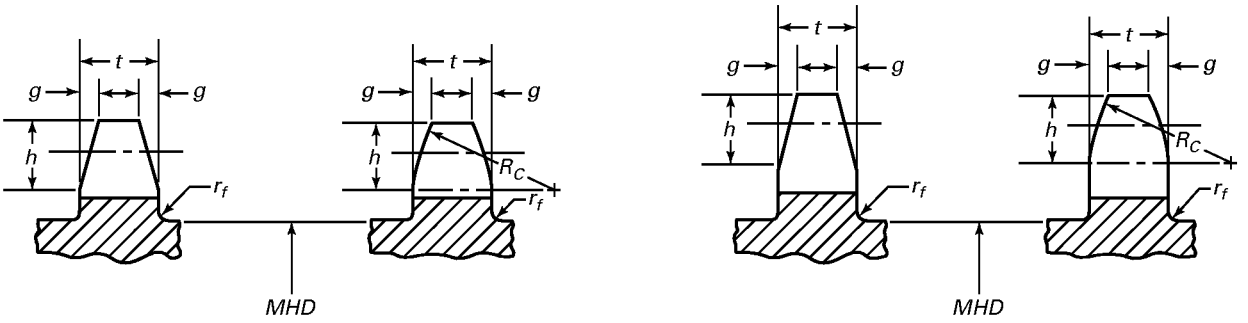

(a) Small Roller Series

(b) Large Roller Series

Fig. 6 Sprocket Tooth Section Profile

Table 8A Sprocket Tooth Section Profile Dimensions, in.

Standard Chain No.	Pitch *P*	Width of Chain *W*	Maximum Sprocket Thickness *t*	Minus Tolerance on *t*	Depth of Chamfer *h*	Width of Chamfer *g*	Radius R_c
C2040, C2042	1.000	0.312	0.284	0.035	0.250	0.062	0.531
C2050, C2052	1.250	0.375	0.343	0.036	0.312	0.078	0.664
C2060, C2062	1.500	0.500	0.459	0.036	0.375	0.094	0.796
C2060H, C2062H	1.500	0.500	0.459	0.036	0.375	0.094	0.796
C2080, C2082	2.000	0.625	0.575	0.040	0.500	0.125	1.062
C2080H, C2082H	2.000	0.625	0.575	0.040	0.500	0.125	1.062
C2100, C2102	2.500	0.750	0.692	0.046	0.625	0.156	1.327
C2100H, C2102H	2.500	0.750	0.692	0.046	0.625	0.156	1.327
C2120, C2122	3.000	1.000	0.924	0.057	0.750	0.188	1.593
C2120H, C2122H	3.000	1.000	0.924	0.057	0.750	0.188	1.593
C2160, C2162	4.000	1.250	1.156	0.062	1.000	0.250	2.124
C2160H, C2162H	4.000	1.250	1.156	0.062	1.000	0.250	2.124

Table 8B Sprocket Tooth Section Profile Dimensions, mm

Standard Chain No.	Pitch *P*	Width of Chain *W*	Maximum Sprocket Thickness *t*	Minus Tolerance on *t*	Depth of Chamfer *h*	Width of Chamfer *g*	Radius R_c
C2040, C2042	25.40	7.92	7.21	0.89	6.35	1.57	13.49
C2050, C2052	31.75	9.52	8.71	0.91	7.92	1.98	16.87
C2060, C2062	38.10	12.70	11.66	0.91	9.52	2.39	20.22
C2060H, C2062H	38.10	12.70	11.66	0.91	9.52	2.39	20.22
C2080, C2082	50.80	15.88	14.60	1.02	12.70	3.18	26.97
C2080H, C2082H	50.80	15.88	14.60	1.02	12.70	3.18	26.97
C2100, C2102	63.50	19.05	17.58	1.17	15.88	3.96	33.71
C2100H, C2102H	63.50	19.05	17.58	1.17	15.88	3.96	33.71
C2120, C2122	76.20	25.40	23.47	1.45	19.05	4.78	40.46
C2120H, C2122H	76.20	25.40	23.47	1.45	19.05	4.78	40.46
C2160, C2162	101.60	31.75	29.36	1.57	25.40	6.35	53.95
C2160H, C2162H	101.60	31.75	29.36	1.57	25.40	6.35	53.95

Copyright ASME International
Provided by IHS under license with ASME
No reproduction or networking permitted without license from IHS
Not for Resale

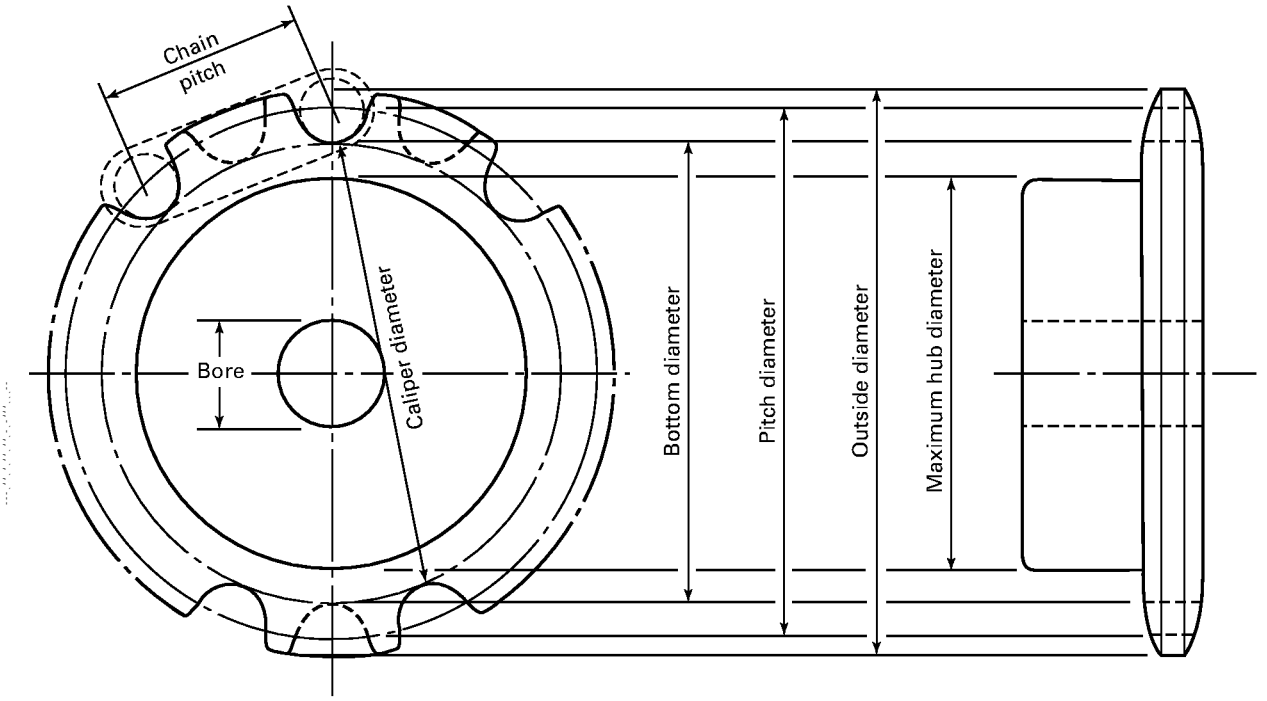

BD = bottom diameter
$= PD - R_S$
CD = caliper diameter
N = number of effective teeth
P = chain pitch
PD = pitch diameter
$= \dfrac{P}{\sin \dfrac{180 \text{ deg}}{N}}$
R_S = roller diameter

CD, single-cut, if N is an odd number [Note (1)] $= PD \left(\cos \dfrac{90 \text{ deg}}{N} \right) - R_S$

CD, single-cut, if N is an even number [Note (2)] $= PD - R_S = BD$

CD, double-cut, if N is a fractional number [Note (1)] $= PD \left(\cos \dfrac{45 \text{ deg}}{N} \right) - R_S$

CD, double-cut, whether N is an odd or even number [Note (2)] $= PD - R_S = BD$

Fig. 7 Sprocket Diameters, Small Roller Series

Copyright ASME International
Provided by IHS under license with ASME
No reproduction or networking permitted without license from IHS
Not for Resale

Notes to Fig. 7:

(1) These caliper diameters are measured across any two tooth spaces that are most nearly diametrically opposite to each other.

(2) These caliper diameters are measured across any two tooth spaces that are exactly diametrically opposite to each other.

Tolerances on bottom or caliper diameter of sprockets:

Plus tolerance = 0.000

Minus tolerance = 0.002 (P in inches) $\sqrt{N}$ + 0.006 in. with a minimum tolerance of 0.012 in. and a maximum of 0.048 in.

= 0.002 (P in millimeters) $\sqrt{N}$ + 0.152 mm with a minimum tolerance of 0.30 mm and a maximum of 1.20 mm

Approximate outside diameter of sprocket

$$= PD \text{ in inches} + \left(\frac{P \text{ in inches}}{2}\right)\left(0.6 - \tan\frac{90 \text{ deg}}{N}\right)$$

$$= PD \text{ in millimeters} + \left(\frac{P \text{ in millimeters}}{2}\right)\left(0.6 - \tan\frac{90 \text{ deg}}{N}\right)$$

Maximum hub diameter (MHD) of sprockets

$$= (P \text{ in inches})\left(\cot\frac{180 \text{ deg}}{N} - 0.5\right) - 0.030 \text{ in.}$$

$$= (P \text{ in millimeters})\left(\cot\frac{180 \text{ deg}}{N} - 0.5\right) - 0.76 \text{ mm}$$

Copyright ASME International
Provided by IHS under license with ASME
No reproduction or networking permitted without license from IHS

Not for Resale

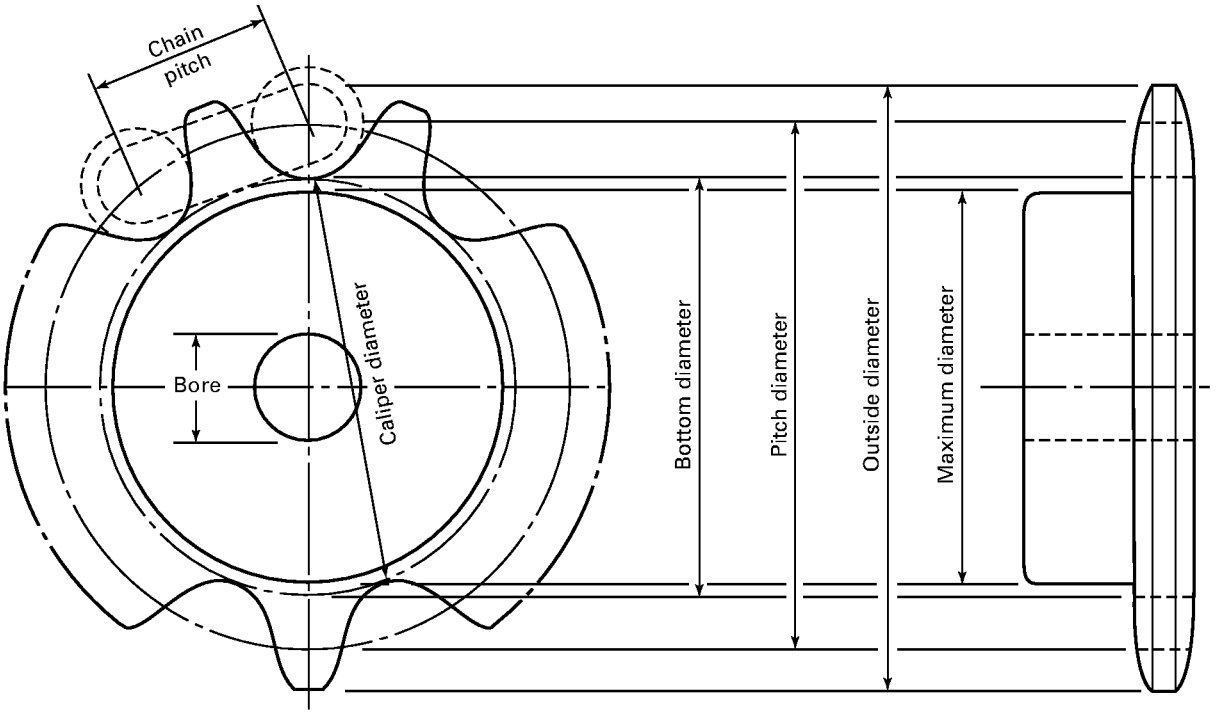

N = number of teeth (not shown)
P = chain pitch
PD = pitch diameter
R_L = roller diameter (not shown)

$$\text{Bottom diameter of sprocket} = PD - R_L$$

$$\text{Pitch diameter of sprocket} = \frac{P}{\sin \frac{180 \text{ deg}}{N}}$$

Caliper diameter for even number of teeth = bottom diameter

$$\text{Caliper diameter for odd number of teeth} = PD\left(\cos \frac{90 \text{ deg}}{N}\right) - R_L$$

Tolerances on bottom or caliper diameter of sprockets:

Plus tolerance = 0.000

Minus tolerance = 0.002 (P in inches) $\sqrt{N}$ + 0.006 in. with a minimum tolerance of 0.012 in. and a maximum of 0.048 in.

= 0.002 (P in millimeters) $\sqrt{N}$ + 0.152 mm with a minimum tolerance of 0.30 mm and a maximum of 1.20 mm

$$\text{Maximum hub diameter } (MHD) \text{ of sprockets} = (P \text{ in inches})\left(\cot \frac{180 \text{ deg}}{N} - 0.5\right) - 0.030 \text{ in.}$$

$$= (P \text{ in millimeters})\left(\cot \frac{180 \text{ deg}}{N} - 0.5\right) - 0.76 \text{ mm}$$

[but not to exceed bottom diameter in inches (0.030 in.) or bottom diameter in millimeters (0.76 mm)]

Fig. 8 Sprocket Diameters, Large Roller Series

Copyright ASME International
Provided by IHS under license with ASME
No reproduction or networking permitted without license from IHS Not for Resale

Table 9A Minus Tolerances on the Bottom or Caliper Diameters of Sprockets for Various Numbers of Effective Teeth, in.

Standard Chain No.	Chain Pitch *P*	Effective Number of Teeth *N*				
		Up Through 15½	16–24½	25–35½	36–48½	49–60
C2040, C2042	1.000	0.012	0.014	0.016	0.018	0.020
C2050, C2052	1.250	0.014	0.016	0.019	0.021	0.024
C2060, C2062	1.500	0.015	0.018	0.021	0.024	0.027
C2060H, C2062H	1.500	0.015	0.018	0.021	0.024	0.027
C2080, C2082	2.000	0.018	0.022	0.026	0.030	0.034
C2080H, C2082H	2.000	0.018	0.022	0.026	0.030	0.034
C2100, C2102	2.500	0.021	0.026	0.031	0.036	0.041
C2100H, C2102H	2.500	0.021	0.026	0.031	0.036	0.041
C2120, C2122	3.000	0.024	0.030	0.036	0.042	0.048
C2120H, C2122H	3.000	0.024	0.030	0.036	0.042	0.048
C2160, C2162	4.000	0.030	0.038	0.046	0.048	0.048
C2160H, C2162H	4.000	0.030	0.038	0.046	0.048	0.048

GENERAL NOTE: No plus tolerances.

Table 9B Minus Tolerances on the Bottom or Caliper Diameters of Sprockets for Various Numbers of Effective Teeth, mm

Standard Chain No.	Chain Pitch *P*	Effective Number of Teeth *N*				
		Up Through 15½	16–24½	25–35½	36–48½	49–60
C2040, C2042	25.40	0.30	0.36	0.41	0.46	0.51
C2050, C2052	31.75	0.36	0.41	0.48	0.53	0.61
C2060, C2062	38.10	0.38	0.46	0.53	0.61	0.69
C2060H, C2062H	38.10	0.38	0.46	0.53	0.61	0.69
C2080, C2082	50.80	0.46	0.56	0.66	0.76	0.86
C2080H, C2082H	50.80	0.46	0.56	0.66	0.76	0.86
C2100, C2102	63.50	0.53	0.66	0.79	0.91	1.04
C2100H, C2102H	63.50	0.53	0.66	0.79	0.91	1.04
C2120, C2122	76.20	0.61	0.76	0.91	1.07	1.22
C2120H, C2122H	76.20	0.61	0.76	0.91	1.07	1.22
C2160, C2162	101.60	0.76	0.97	1.17	1.22	1.22
C2160H, C2162H	101.60	0.76	0.97	1.17	1.22	1.22

GENERAL NOTE: No plus tolerances.

Copyright ASME International
Provided by IHS under license with ASME
No reproduction or networking permitted without license from IHS

Not for Resale

Table 10 Sprocket Factors, Small Roller Series

No. of Effective Teeth	Pitch Diameter	Approximate Outside Diameter	Caliper Diameter Factor	
			Single Cut (*N* is Odd)	Double Cut (*N* is Fractional)
5	1.7013	1.839	1.6180	. . .
5½	1.8496	2.003	. . .	1.8308
6	2.0000	2.166	. . .	. . .
6½	2.1519	2.329	. . .	2.1361
7	2.3048	2.491	2.2470	. . .
7½	2.4586	2.652	. . .	2.4451
8	2.6131	2.814	. . .	. . .
8½	2.7682	2.975	. . .	2.7564
9	2.9238	3.136	2.8794	. . .
9½	3.0798	3.296	. . .	3.0692
10	3.2361	3.457	. . .	. . .
10½	3.3927	3.617	. . .	3.3831
11	3.5495	3.778	3.5133	. . .
11½	3.7065	3.938	. . .	3.6978
12	3.8637	4.098	. . .	. . .
12½	4.0211	4.258	. . .	4.0131
13	4.1786	4.418	4.1481	. . .
13½	4.3362	4.578	. . .	4.3289
14	4.4940	4.738	. . .	. . .
14½	4.6518	4.897	. . .	4.6450
15	4.8097	5.057	4.7834	. . .
15½	4.9677	5.217	. . .	4.9614
16	5.1258	5.377	. . .	. . .
16½	5.2840	5.536	. . .	5.2780
17	5.4422	5.696	5.4190	. . .
17½	5.6005	5.855	. . .	5.5948
18	5.7588	6.015	. . .	. . .
18½	5.9171	6.175	. . .	5.9118
19	6.0755	6.334	6.0548	. . .
19½	6.2340	6.494	. . .	6.2289
20	6.3924	6.653	. . .	. . .
20½	6.5509	6.813	. . .	6.5461
21	6.7095	6.972	6.6907	. . .
21½	6.8681	7.131	. . .	6.8635
22	7.0267	7.291	. . .	. . .
22½	7.1853	7.450	. . .	7.1809
23	7.3439	7.610	7.3268	. . .
23½	7.5026	7.769	. . .	7.4984
24	7.6613	7.929	. . .	. . .
24½	7.8200	8.088	. . .	7.8160
25	7.9787	8.247	7.9630	. . .
25½	8.1375	8.407	. . .	8.1336
26	8.2962	8.566	. . .	. . .
26½	8.4550	8.725	. . .	8.4513
27	8.6138	8.884	8.5992	. . .
27½	8.7726	9.044	. . .	8.7690
28	8.9314	9.203	. . .	. . .
28½	9.0902	9.363	. . .	9.0868

Copyright ASME International
Provided by IHS under license with ASME
No reproduction or networking permitted without license from IHS
Not for Resale

Table 10 Sprocket Factors, Small Roller Series (Cont'd)

No. of Effective Teeth	Pitch Diameter	Approximate Outside Diameter	Caliper Diameter Factor	
			Single Cut (*N* is Odd)	Double Cut (*N* is Fractional)
29	9.2491	9.522	9.2355	...
29½	9.4080	9.681	...	9.4046
30	9.5668	9.841	...	...
30½	9.7256	10.000	...	9.7224
31	9.8845	10.159	9.8718	...
31½	10.0434	10.318	...	10.0403
32	10.2023	10.478	...	...
32½	10.3612	10.637	...	10.3582
33	10.5201	10.796	10.5082	...
33½	10.6790	10.956	...	10.6761
34	10.8379	11.115	...	...
34½	10.9969	11.274	...	10.9940
35	11.1558	11.433	11.1446	...
35½	11.3148	11.593	...	11.3120
36	11.4737	11.752	...	...
36½	11.6237	11.911	...	11.6300
37	11.7916	12.070	11.7810	...
37½	11.9506	12.230	...	11.9480
38	12.1095	12.389	...	...
38½	12.2685	12.548	...	12.2660
39	12.4275	12.707	12.4174	...
39½	12.5865	12.867	...	12.5840
40	12.7455	13.026	...	...
40½	12.9045	13.185	...	12.9021
41	13.0635	13.344	13.0539	...
41½	13.2225	13.504	...	13.2201
42	13.3815	13.663	...	...
42½	13.5405	13.822	...	13.5382
43	13.6995	13.981	13.6904	...
43½	13.8585	14.140	...	13.8563
44	14.0175	14.300	...	...
44½	14.1765	14.459	...	14.1744
45	14.3355	14.618	14.3269	...
45½	14.4946	14.777	...	14.4925
46	14.6536	14.937	...	...
46½	14.8127	15.096	...	14.8106
47	14.9717	15.255	14.9634	...
47½	15.1308	15.414	...	15.1287
48	15.2898	15.573	...	...
48½	15.4488	15.733	...	15.4468
49	15.6079	15.892	15.5999	...
49½	15.7669	16.051	...	15.7649
50	15.9260	16.210	...	...
50½	16.0850	16.369	...	16.0831
51	16.2441	16.529	16.2364	...
51½	16.4031	16.688	...	16.4012
52	16.5622	16.847	...	...
52½	16.7212	17.006	...	16.7194

Copyright ASME International
Provided by IHS under license with ASME
No reproduction or networking permitted without license from IHS

Not for Resale

Table 10 Sprocket Factors, Small Roller Series (Cont'd)

No. of Effective Teeth	Pitch Diameter	Approximate Outside Diameter	Caliper Diameter Factor	
			Single Cut (*N* is Odd)	Double Cut (*N* is Fractional)
53	16.8803	17.165	16.8729	...
53½	17.0393	17.325	...	17.0375
54	17.1984	17.484	...	...
54½	17.3575	17.643	...	17.3557
55	17.5165	17.802	17.5094	...
55½	17.6756	17.961	...	17.6739
56	17.8347	18.121	...	...
56½	17.9938	18.280	...	17.9920
57	18.1528	18.439	18.1459	...
57½	18.3119	18.598	...	18.3102
58	18.4710	18.757	...	...
58½	18.6301	18.917	...	18.6284
59	18.7892	19.076	18.7825	...
59½	18.9482	19.235	...	18.9466
60	19.1073	19.394	...	...

GENERAL NOTES:

(a) This Table includes standard pitch diameters, outside diameters, and caliper diameter factors for single-cut sprockets where the number of effective teeth is odd, and double-cut sprockets where the number of effective teeth is fractional to suit a double-pitch chain of unit pitch (e.g., 1 in. or 1 mm), small roller series (the respective diameters for sprockets to suit a chain of any other pitch are directly proportional to the pitch of the chain).

(b) For other pitches of double-pitch roller chain, small roller series:

Pitch diameter = pitch diameter from this Table × chain pitch

Outside diameter = outside diameter from this Table × chain pitch

Caliper diameter factor for single cut, if N is an odd number = PD (cos 90 deg/N)

Caliper diameter factor for double cut, if N is a fractional number = PD (cos 45 deg/N)

Caliper diameter for single cut, if N is an odd number, and double cut, if N is a fractional number = (caliper diameter factor from this Table × chain pitch) − roller diameter R_S

Caliper diameter for single cut, if N is an even number, and double cut, if N is an odd or even number = pitch diameter − roller diameter R_S

Copyright ASME International
Provided by IHS under license with ASME
No reproduction or networking permitted without license from IHS Not for Resale

Table 11 Sprocket Factors, Large Roller Series

No. of Effective Teeth	Pitch Diameter	Outside Diameter	Caliper Diameter Factor	No. of Effective Teeth	Pitch Diameter	Outside Diameter	Caliper Diameter Factor
5	1.7013	1.976	1.6180	33	10.5201	11.073	10.5082
6	2.0000	2.332	. . .	34	10.8379	11.392	. . .
7	2.3048	2.676	2.2470	35	11.1558	11.711	11.1446
8	2.6131	3.014	. . .	36	11.4737	12.030	. . .
9	2.9238	3.348	2.8794	37	11.7916	12.349	11.7810
10	3.2361	3.678	. . .	38	12.1095	12.668	. . .
11	3.5495	4.006	3.5133	39	12.4275	12.987	12.4174
12	3.8637	4.332	. . .	40	12.7455	13.306	. . .
13	4.1786	4.657	4.1481	41	13.0635	13.625	13.0539
14	4.4940	4.981	. . .	42	13.3815	13.944	. . .
15	4.8097	5.304	4.7834	43	13.6995	14.263	13.6904
16	5.1258	5.627	. . .	44	14.0175	14.582	. . .
17	5.4422	5.949	5.4190	45	14.3355	14.901	14.3269
18	5.7588	6.271	. . .	46	14.6536	15.219	. . .
19	6.0755	6.593	6.0548	47	14.9717	15.538	14.9634
20	6.3924	6.914	. . .	48	15.2898	15.857	. . .
21	6.7095	7.235	6.6907	49	15.6079	16.176	15.5999
22	7.0267	7.555	. . .	50	15.9260	16.495	. . .
23	7.3439	7.876	7.3268	51	16.2441	16.813	16.2364
24	7.6613	8.196	. . .	52	16.5622	17.132	. . .
25	7.9787	8.516	7.9630	53	16.8803	17.451	16.8729
26	8.2962	8.836	. . .	54	17.1984	17.769	. . .
27	8.6138	9.156	8.5992	55	17.5165	18.088	17.5094
28	8.9314	9.475	. . .	56	17.8347	18.407	. . .
29	9.2491	9.795	9.2355	57	18.1528	18.725	18.1459
30	9.5668	10.114	. . .	58	18.4710	19.044	. . .
31	9.8845	10.434	9.8718	59	18.7892	19.363	18.7825
32	10.023	10.753	. . .	60	19.1073	19.681	. . .

GENERAL NOTES:

(a) This Table includes standard pitch diameters, outside diameters, and caliper diameter factors for odd numbers of teeth of sprockets to suit a conveyor chain of unit pitch (e.g., 1 in. or 1 mm), large roller series. (The respective diameters for sprockets to suit a chain of any other pitch are directly proportional to the pitch of the chain.)

(b) For other pitches of conveyor roller chain, large roller series:

Pitch diameter = pitch diameter from this Table × chain pitch

Outside diameter = outside diameter from this Table × chain pitch

Caliper diameter factor = PD (cos 90 deg/N)

Caliper diameter (odd teeth) = (caliper diameter factor from this Table × chain pitch) − roller diameter R_L

Caliper diameter (even teeth) = pitch diameter − roller diameter R_L

Copyright ASME International
Provided by IHS under license with ASME
No reproduction or networking permitted without license from IHS
Not for Resale

NONMANDATORY APPENDIX A
SUPPLEMENTARY INFORMATION[1]

A1 CHAIN SELECTION

Conveyor chains are selected for specific operating conditions on the basis of the maximum loading that is expected to be encountered (see Tables A1A and A1B). Chain joint wear is negligible when loads are uniform, sprockets are of adequate size, and proper lubrication is provided.

A1.1 Coefficients of Friction

The factors in Tables A2 and A3 are based on operation on smooth, flat, clean tracks at temperatures not exceeding 350°F (177°C). When clean tracks cannot be maintained, the factors should be increased. When the operating temperature exceeds 350°F (177°C), the chain manufacturer should be consulted for the factors for the specific conditions. Use static figures for chains operating at 3 ft/min (914 mm/min) or less.

Supporting of the conveyed load by the rollers of the small roller series is not recommended, since some of the rollers may not turn due to the small ratio of roller outside diameter to roller inside diameter. Such use of the standard roller series may result in flats being worn on the outside of the roller surface.

A1.2 Lubrication

Conveyor chains should be kept as clean as operating conditions will permit, for the purpose of fostering effective lubrication to minimize metal-to-metal contact of pin–bushing and bushing–roller joints. Oil should be applied to upper edges of all link plates while in the lower span of chain, since access to joint clearances is possible only through clearances between roller link plates and rollers. Oil applied on the centerline of rollers cannot reach pin–bushing joints and therefore cannot retard the rate of wear elongation of chain pitch.

A good grade of mineral oil, without additives, of medium or light consistency, free flowing at the prevailing temperature, should be used.

Heavy oils and greases are not recommended for lubrication of conveyor roller chains, except under unusual conditions of service, because they generally are too stiff to enter and fill the small clearances between the chain parts.

Chains may be lubricated by any means that will assure adequate oiling of every chain joint, whether lubrication is continuous by means of wicks; or whether it is intermittent and periodic, oil being applied manually by brush or spout can, or intermittently drip fed to wipers as may be advisable for services for which surplus lubrication must be avoided to prevent contamination by the lubricant of the material being conveyed.

Tracks may be lubricated with the same type free-flowing oil used for chain joint lubrication or, if desirable, with a more viscous oil having better adherence to the track and providing better lubrication for conditions where link plate edges are sliding on the supporting track.

Engineers of chain manufacturers should be consulted in regard to lubrication of conveyor chains for which lubrication other than as outlined in this Appendix might seem to be desirable.

A1.3 Sprockets

Sprockets should have cut teeth. Tooth shape, thickness, profile, and diameters should conform to these standards. The use of sprockets with the largest practical number of teeth, preferably no fewer than 15 effective teeth, is essential for smoothest operation, and longest chain and sprocket life. Sprockets having 17 effective teeth and less will preferably be of steel, with hardness of 180 Brinell minimum. If the conveyors are exposed to abrasive conditions, either 0.20 carbon steel, carburized, hardened, and drawn; or 0.40 or higher carbon steel, heat treated and drawn; are generally recommended, the hardness usually being between 300 Brinell minimum and 550 Brinell maximum.

Larger sprockets may be made from unhardened steel plates, bars, castings, or forgings, or cast iron, depending upon the duty imposed.

A1.4 Center Distance Adjustment

Especially for long conveyors, it is desirable that take-up devices be provided.

The arc of meshing of the chain on loaded sprockets should be no less than 135 deg. Idler sprockets should have at least three teeth in mesh with the chain, and preferably will mesh with slack spans.

A1.5 Alignment

Alignment of shafting and sprocket tooth faces must be such as to conform to usual standards of good workmanship: shafts being parallel and horizontal, installations being such that loading will be properly

[1] Made available through the cooperation of the American Chain Association.

Copyright ASME International
Provided by IHS under license with ASME
No reproduction or networking permitted without license from IHS
Not for Resale

Table A1A Recommended Maximum Working Load, lb

Pitch, in.	Chain Speed, ft/min								
	5	25	50	75	100	200	300	400	500
1.000	530	525	510	490	465	335	230	160	115
1.250	870	865	840	805	765	555	380	265	190
1.500	1215	1205	1170	1125	1065	775	530	370	265
2.000	2070	2055	2000	1915	1815	1320	905	630	455
2.500	3425	3400	3310	3175	3000	2180	1500	1040	750
3.000	4855	4815	4690	4495	4250	3090	2125	1480	1065
4.000	8585	8210	8000	7670	7250	5275	3625	2520	1815

Table A1B Recommended Maximum Working Load, N

Pitch, mm	Chain Speed, m/min								
	2	10	15	25	30	60	90	120	150
25.40	2 360	2 340	2 270	2 180	2 070	1 490	1 020	710	510
31.75	3 870	3 850	3 740	3 580	3 400	2 470	1 690	1 180	845
38.10	5 400	5 360	5 200	5 000	4 740	3 450	2 360	1 650	1 180
50.80	9 210	9 140	8 900	8 520	8 070	5 870	4 030	2 800	2 020
63.50	15 200	15 100	14 700	14 100	13 300	9 700	6 670	4 630	3 340
76.20	21 600	21 400	20 900	20 000	18 900	13 700	9 450	6 580	4 740
101.60	38 200	36 500	35 600	34 100	32 200	23 500	16 100	11 200	8 070

Table A2 Coefficients of Friction When Conveyed Load Is Carried by Link Plate Edges

Coefficient of Friction	Dry	Lubricated
Static	0.33	0.24
Sliding	0.27	0.21

Table A3 Coefficients of Friction When Conveyor Load Is Carried by Rollers (Large Roller Series Only)

Standard Chain No.	Static		Rolling	
	Dry	Lubricated	Dry	Lubricated
C2042	0.17	0.12	0.14	0.10
C2052	0.16	0.11	0.13	0.09
C2062, C2062H	0.16	0.11	0.13	0.09
C2082, C2082H	0.15	0.10	0.12	0.08
C2102, C2102H	0.14	0.09	0.11	0.07
C2122, C2122H	0.14	0.09	0.11	0.07
C2162, C2162H	0.13	0.08	0.10	0.07

distributed across the chain width or, when pairs of chains are used in parallel, equally shared. Shafting, bearings, and foundation should be suitable to maintain the initial static alignment.

In the event that double-pitch conveyor chains are applied in power transmission service, refer to ASME B29.3 for selection information.

A2 SPROCKET CUTTER SELECTION

A2.1 Small Roller Series

The tooth space form for sprockets for conveyor chain, small roller series, is basically the same as that for base series transmission roller chain. ASME B29.1 covers tooth space form, and cutter and hob design, for the base series transmission roller chain sprockets.

When cutting sprocket teeth with a tooth space cutter, the same space cutter should be used as for the base series transmission roller chain, but having the next higher range of teeth than the number of effective teeth to be cut.

EXAMPLE: For 15 Teeth No. C2080H, a No. 80 space cutter having a range of 18–34 teeth should be used instead of one for the 12–17 tooth range.

When cutting teeth of sprockets with a base series transmission roller chain hob or Fellows cutter, it is necessary to cut an extra set or a double number of teeth, resulting in two sets of teeth. The chain will engage only one set of teeth.

A2.2 Large Roller Series

The tooth space form for sprockets for conveyor chain, large roller series, is the same as that for the respective base series transmission roller chain having the same pitch and roller diameter.

ASME B29.1 covers tooth space form and tool design for base series chain sprockets, which are applicable to large roller series chains in this Standard for all pitches up to and including 2.500 in. (63.50 mm) pitch. The tooth

Copyright ASME International
Provided by IHS under license with ASME
No reproduction or networking permitted without license from IHS
Not for Resale

space form for 3.000 in. (76.20 mm) and 4.000 in. (101.60 mm) pitch chain sprockets may be derived from the formulas in ASME B29.1.

Except for 3.000 in. (76.20 mm) and 4.000 in. (101.60 mm) pitch chains with large rollers, sprockets may be cut with hobs and/or cutters for the ASME B29.1 transmission roller chain of the same pitch. Sprocket cutting tools designed specifically for the 3.000 in. (76.20 mm) and 4.000 in. (101.60 mm) pitch chain roller diameters are required, because the ASME B29.1 transmission roller chain series does not include these roller diameters.

Copyright ASME International
Provided by IHS under license with ASME
No reproduction or networking permitted without license from IHS
Not for Resale

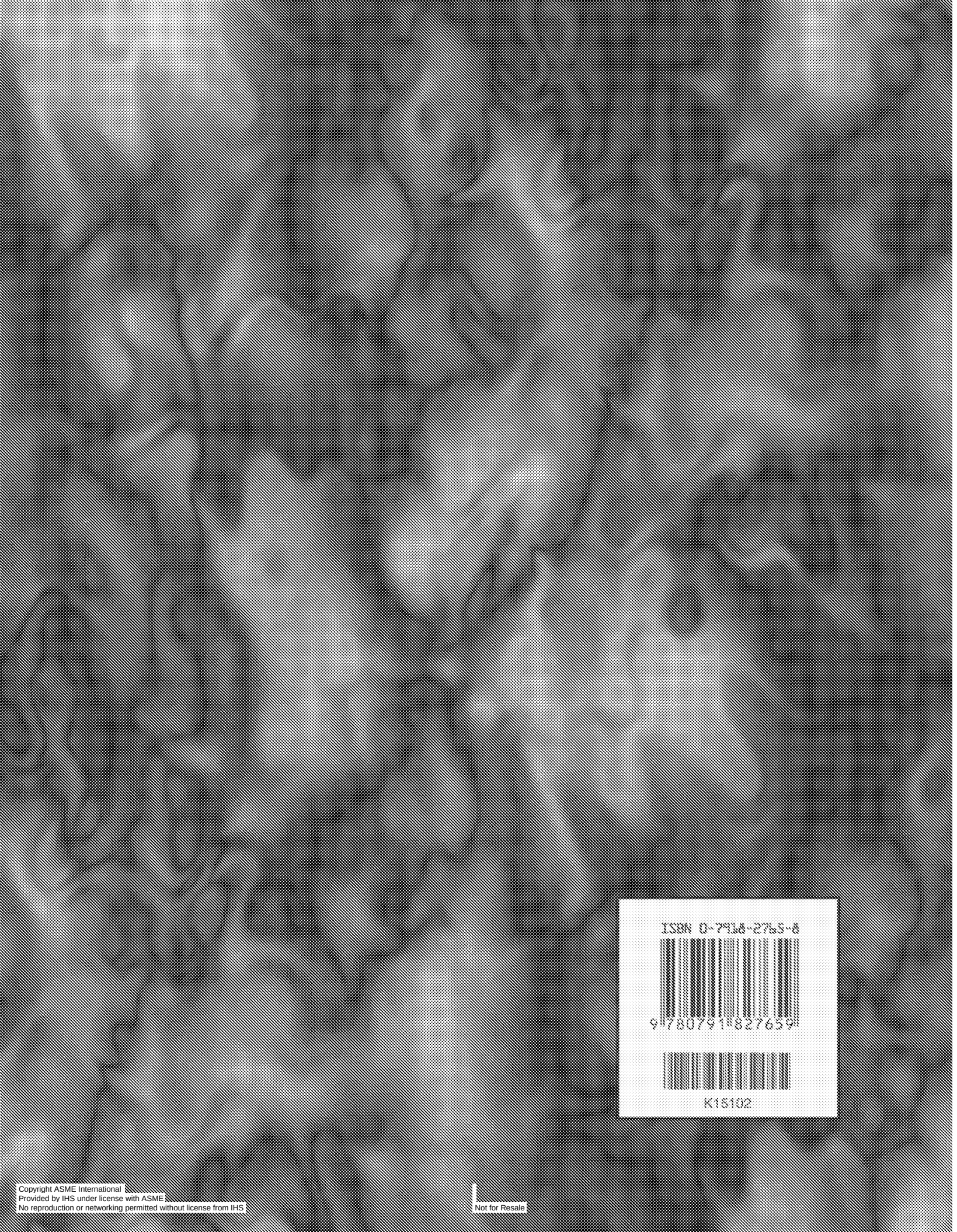

Copyright ASME International
Provided by IHS under license with ASME
No reproduction or networking permitted without license from IHS
Not for Resale