STD.ASME B18.8.200M-ENGL 2000 0759670 0618571 461

ASME B18.8.200M-2000

COTTER PINS, HEADLESS CLEVIS PINS, AND HEADED CLEVIS PINS (METRIC SERIES)

Incorporating ASME B18.8.6M, B18.8.7M, and B18.8.8M

AN AMERICAN NATIONAL STANDARD

The American Society of Mechanical Engineers

Copyright ASME International
Provided by IHS under license with ASME
No reproduction or networking permitted without license from IHS

Not for Resale

The American Society of Mechanical Engineers

AN AMERICAN NATIONAL STANDARD

COTTER PINS, HEADLESS CLEVIS PINS, AND HEADED CLEVIS PINS (METRIC SERIES)

Incorporating ASME B18.8.6M, B18.8.7M, and B18.8.8M

ASME B18.8.200M-2000

Copyright ASME International
Provided by IHS under license with ASME
No reproduction or networking permitted without license from IHS

Not for Resale

Date of Issuance: September 15, 2000

The 2000 edition of this Standard is being issued with an automatic addenda subscription service. The use of addenda allows revisions made in response to public review comments or committee actions to be published as necessary. The next edition of this Standard is scheduled for publication in 2003.

ASME issues written replies to inquiries concerning interpretations of technical aspects of this Standard. The interpretations will be included with the above addenda service.

ASME is the registered trademark of The American Society of Mechanical Engineers.

This code or standard was developed under procedures accredited as meeting the criteria for American National Standards. The Standards Committee that approved the code or standard was balanced to assure that individuals from competent and concerned interests have had an opportunity to participate. The proposed code or standard was made available for public review and comment that provides an opportunity for additional public input from industry, academia, regulatory agencies, and the public-at-large.

ASME does not "approve," "rate," or "endorse" any item, construction, proprietary device, or activity.

ASME does not take any position with respect to the validity of any patent rights asserted in connection with any items mentioned in this document, and does not undertake to insure anyone utilizing a standard against liability for infringement of any applicable letters patent, nor assume any such liability. Users of a code or standard are expressly advised that determination of the validity of any such patent rights, and the risk of infringement of such rights, is entirely their own responsibility.

Participation by federal agency representative(s) or person(s) affiliated with industry is not to be interpreted as government or industry endorsement of this code or standard.

ASME accepts responsibility for only those interpretations of this document issued in accordance with the established ASME procedures and policies, which precludes the issuance of interpretations by individuals.

No part of this document may be reproduced in any form,
in an electronic retrieval system or otherwise,
without the prior written permission of the publisher.

The American Society of Mechanical Engineers
Three Park Avenue, New York, NY 10016-5990

Copyright © 2000 by
THE AMERICAN SOCIETY OF MECHANICAL ENGINEERS
All Rights Reserved
Printed in U.S.A.

Copyright ASME International
Provided by IHS under license with ASME
No reproduction or networking permitted without license from IHS

Not for Resale

FOREWORD

The need for a standard covering machine pins was recognized by industry as far back as March 1926, when the Sectional Committee on the Standardization of Machine Pins was organized under the procedure of the American Standards Association (later the United States of America Standards Institute and as of October 6, 1969, the American National Standards Institute, Inc.), with the Society of Automotive Engineers and the American Society of Mechanical Engineers as joint sponsors.

For the next year or two, an effort was made via correspondence to develop a basis on which a standard for straight, taper, split, and dowel pins might be established. Through this correspondence a distinct difference of opinion developed between the manufacturers and users of taper machine pins, which seemed to discourage the members of the committee from attempting standardization on any of the types of pins within its scope. The sponsor organizations made frequent efforts to revive this project through letters and the distribution of technical literature on this general subject, without avail.

In December 1941, in its periodic review of standards projects for which the Society is sponsor, the ASME Standardization Committee decided that there was little hope for reviving of this project to Sectional Committee B5 on the Standardization of Small Tools and Machine Tool Elements. The sponsors agreed and on July 7, 1942, the ASA sanctioned this action, Sectional Committee B43 was discharged, and the project was officially transferred to Sectional Committee B5.

At its meeting in December 1942, Sectional Committee B5 voted to enlarge its scope to include machine pins. Technical Committee No. 23 was subsequently established and charged with the responsibility for technical content of standards covering machine pins. This group held its first meeting on November 30, 1943, at which time a Subgroup on Correlation and Recommendations was appointed, and it was voted to include clevis pins in addition to the other pin types already under consideration. Several drafts were prepared by the subgroup, distributed for critical comment to users, manufacturers, and general interests, and revised and resubmitted for comments. This action finally resulted in acceptance by Technical Committee 23 of a draft dated November 1945, which was duplicated in printer's proof form, under a date of October 1946, and distributed to the members of Sectional Committee B5 for letter ballot approval. Subsequent to the approval of the Sectional Committee, the proposal was next approved by the sponsor bodies and presented to the American Standards Association for approval as an American Standard. This designation was granted on July 7, 1947.

Following the issuance of the Standard, it became apparent that the table on cotter pins needed revision. Accordingly, in 1953 a proposed revision was submitted to the Sectional Committee. After attaining Sectional Committee and sponsor approval, this revision was approved by the American Standards Association on July 9, 1954, as ASA B5.20-1954.

In 1956 and 1957, in response to requests from industry, extensive changes were incorporated into a proposed revision. These included revisions to chamfer values and tolerances on straight pins and unhardened ground dowel pins; revisions to under head to hole, pin end dimensions, and hole size tolerances on clevis pins; addition of chisel point to cotter pin end styles; and the incorporation of coverage on grooved pins. Following

Copyright ASME International
Provided by IHS under license with ASME
No reproduction or networking permitted without license from IHS
Not for Resale

Sectional Committee and sponsor approvals, this revision was adopted by the American Standards Association on March 25, 1958, as ASA B5.20-1958.

Late in 1961, Sectional Committee B5 suggested that Sectional Committee B18 on the standardization of bolts, nuts, rivets, screws, and similar fasteners assume jurisdiction over standards for pins. Recognizing that the bulk of the products covered in the ASA B5.20 standards were fastener rather than machine oriented, this recommendation was supported by the B18 Committee and officially endorsed by the sponsor organizations. Consequently, at the September 14, 1962, meeting of this Committee, it was decreed that Subcommittee 23[1] should be formed to undertake a review and update of the pin standard.

At the initial meeting of Subcommittee 23 held on June 3, 1964, it was decided to add standards for spring pins (inch series), to establish seven subgroups, each of which would have technical responsibility for specific pin products, and to publish respective products under separate cover as projects were completed.

Over the ensuing several years, work by Subgroups 2, 3, 4, 5, and 6 culminated in the development of a proposal for revision of the standards covering taper, dowel, straight, and grooved pins and including coverage for spring pins (inch series), which was approved by letter ballot of Subcommittee B8 on February 24, 1977. Subsequent to acceptance by American National Standards Committee B18 and the sponsor organizations, this document was duly submitted to the American National Standards Institute for approval as an American National Standard. This was granted on April 5, 1978, and the Standard was published under the designation ANSI B18.8.2, superseding in part the coverage provided in ASA B5.20-1958.

ANSI B18.8.2-1978 was reaffirmed in 1979, 1983, and 1988, and was revised and approved by the Board of Standardization on July 9, 1993.

In response to increased user demand as well as to the federally endorsed metrication program, a metric Standard was developed for coiled type spring pins, and ASME B18.8.3M was issued in 1990.

In May 1993, Subcommittee 8 submitted proposed Standards B18.8.6M, B18.8.7M, and B18.8.8M covering cotter pins, headless clevis pins, and headed clevis pins, metric series, for the B18 standards committee.

In April 1999, Subcommittee 8 proposed that B18.8.6M, B18.8.7M, and B18.8.8M be consolidated into B18.8.200M. Each Standard was approved by ANSI on June 22, 2000.

[1] As of April 1, 1966, Subcommittee 23 was redesignated Subcommittee B.

Copyright ASME International
Provided by IHS under license with ASME
No reproduction or networking permitted without license from IHS
Not for Resale

ASME B18 STANDARDS COMMITTEE
Standardization of Bolts, Nuts, Rivets, Screws, Washers, and Similar Fasteners

(The following is the roster of the Committee at the time of approval of this Standard.)

OFFICERS

D. A. Clever, *Chair*
R. D. Strong, *Vice Chair*
S. W. Vass, *Vice Chair*
R. L. Crane, *Secretary*

COMMITTEE PERSONNEL

J. Altman, Rotor Clip Co.
J. H. Slass, *Alternate,* Rotor Clip Co.
J. B. Belford, Lawson Products, Inc.
J. A. Buda, SPS Technologies
R. M. Byrne, Trade Association Management, Inc.
D. A. Clever, Deere and Co.
A. P. Cockman, Ford Motor Co.
T. Collier, Cam-Tech Industries, Inc.
R. L. Crane, The American Society of Mechanical Engineers
A. C. DiCola, Wrought Washer Co.
B. A. Dusina, Federal Screw Works
D. S. George, Ford Motor Co.
D. L. Drobnich, *Alternate,* Ford Motor Co.
J. Greenslade, Greenslade and Co.
B. Hasiuk, Defense Industrial Supply Center
A. Herskovitz, U.S. Army
J. Hubbard, Rockford Fastener, Inc.
D. F. Kattler, SPS Technologies
F. W. Kern, The Society of Automotive Engineers
J. F. Koehl, Spirol International Corp.
W. H. Kopke, ITW Shakeproof Assembly Co.
J. G. Langenstein, Consultant
M. Levinson, ITW Shakeproof Assembly Co.
D. Liesche, ITW Shakeproof Assembly Co.
L. L. Lord, Caterpillar, Inc.
R. L. Tennis, *Alternate,* Caterpillar, Inc.
D. B. Mantas, GE — Empis
A. D. McCrindle, Genfast Manufacturing Co.
K. E. McCullough, Consultant
R. B. Meade, Camcar Textron
R. F. Novotny, Whitesell Corp.
M. D. Prasad, General Motors Corp.
S. Savoji, ITW Medalist
W. Schevey, BGM Fastener Co., Inc.
R. D. Strong, General Motors Corp.
J. F. Sullivan, National Fasteners Distribution Association
S. W. Vass, Industrial Fasteners Institute
C. B. Wackrow, MNP Corp.

Copyright ASME International
Provided by IHS under license with ASME
No reproduction or networking permitted without license from IHS
Not for Resale

R. G. Weber, Fairfield University
W. K. Wilcox, Consultant
C. J. Wilson, Industrial Fasteners Institute
D. R. Akers, *Alternate,* Industrial Fasteners Institute
R. B. Wright, Wright Tool Co.
J. G. Zeratsky, Tubular and Machine Institute

SUBCOMMITTEE 8 — MACHINE PINS

J. Beshar, *Chair,* Groov-Pin Corp.
B. D. Hamilton, *Vice Chair,* Spirol International
R. L. Crane, *Secretary,* The American Society of Mechanical Engineers
A. E. Barry, Standard Lock Washer Co.
D. A. Clever, Deere and Co.
L. E. Hampel, Allied-Locke Industries, Inc.
A. Herskovitz, U.S. Army
D. F. Kattler, Consultant
R. W. Kerr, Kerr Lakeside, Inc.
H. H. Koehl, Spirol International Corp.
J. F. Koehl, Spirol International Corp.
W. H. Kopke, ITW Shakeproof Assembly Co.
J. G. Langestein, Consultant
M. Levinson, ITW Shakeproof Assembly Co.
D. B. Mantas, GE — Empis
N. M. Sakatos, Vogelsang Corp.
T. Schaumburg, Driv-Lok
L. D. Sieper, Precise Products
C. J. Wilson, Industrial Fasteners Institute

Copyright ASME International
Provided by IHS under license with ASME
No reproduction or networking permitted without license from IHS
Not for Resale

CORRESPONDENCE WITH THE B18 COMMITTEE

General. ASME Standards are developed and maintained with the intent to represent the consensus of concerned interests. As such, users of this Standard may interact with the Committee by requesting interpretations, proposing revisions, and attending Committee meetings. Correspondence should be addressed to:

Secretary, B18 Standards Committee
The American Society of Mechanical Engineers
Three Park Avenue
New York, NY 10016-5990

Proposing Revisions. Revisions are made periodically to the Standard to incorporate changes that appear necessary or desirable, as demonstrated by the experience gained from the application of the Standard. Approved revisions will be published periodically.

The Committee welcomes proposals for revisions to this Standard. Such proposals should be as specific as possible, citing the paragraph number(s), the proposed wording, and a detailed description of the reasons for the proposal, including any pertinent documentation.

Interpretations. Upon request, the B18 Committee will render an interpretation of any requirement of the Standard. Interpretations can only be rendered in response to a written request sent to the Secretary of the B18 Standards Committee.

The request for interpretation should be clear and unambiguous. It is further recommended that the inquirer submit his/her request in the following format:

Subject:	Cite the applicable paragraph number(s) and the topic of the inquiry.
Edition:	Cite the applicable edition of the Standard for which the interpretation is being requested.
Question:	Phrase the question as a request for an interpretation of a specific requirement suitable for general understanding and use, not as a request for an approval of a proprietary design or situation. The inquirer may also include any plans or drawings which are necessary to explain the question; however, they should not contain proprietary names or information.

Requests that are not in this format will be rewritten in this format by the Committee prior to being answered, which may inadvertently change the intent of the original request.

ASME procedures provide for reconsideration of any interpretation when or if additional information that might affect an interpretation is available. Further, persons aggrieved by an interpretation may appeal to the cognizant ASME Committee or Subcommittee. ASME does not "approve," "certify," "rate," or "endorse" any item, construction, proprietary device, or activity.

Attending Committee Meetings. The B18 Standards Committee regularly holds meetings, which are open to the public. Persons wishing to attend any meeting should contact the Secretary of the B18 Standards Committee.

Copyright ASME International
Provided by IHS under license with ASME
No reproduction or networking permitted without license from IHS
Not for Resale

PREFACE

ORGANIZATION OF THIS DOCUMENT

This Standard compiles the following standards:

Standard	*Title*
ASME B18.8.6M	Cotter Pins (Metric Series)
ASME B18.8.7M	Headless Clevis Pins (Metric Series)
ASME B18.8.8M	Headed Clevis Pins (Metric Series)

ADDENDA SERVICE

This edition of ASME B18.8.200M-2000 includes an automatic addenda subscription service up to the publication of the next edition.

Previous page is blank.

Copyright ASME International
Provided by IHS under license with ASME
No reproduction or networking permitted without license from IHS
Not for Resale

CONTENTS

Foreword iii
Committee Roster v
Correspondence With the B18 Committee vii
Preface ix

ASME B18.8.6M Cotter Pins (Metric Series) 1
ASME B18.8.7M Headless Clevis Pins (Metric Series) 7
ASME B18.8.8M Headed Clevis Pins (Metric Series) 17

Previous page is blank.

Copyright ASME International
Provided by IHS under license with ASME
No reproduction or networking permitted without license from IHS
Not for Resale

ASME B18.8.6M-2000

1 Introductory Notes 3

2 General Data 3

Figure

1 Cotter Pin Length Gage 4

Tables

1 Length Tolerance 4
2 Dimensions of Cotter Pins 5
3 Preferred Lengths 6

Copyright ASME International
Provided by IHS under license with ASME
No reproduction or networking permitted without license from IHS
Not for Resale

COTTER PINS

(Metric Series)

1 INTRODUCTORY NOTES

1.1 Scope

1.1.1 This Standard covers the complete dimensional and general data for cotter (split) pins recognized as an American National Standard.

1.1.2 The inclusion of dimensional data in this Standard is not intended to imply that all products described are stock production items. Consumers should consult with suppliers concerning the availability of products.

1.2 Comparison With ISO Standards

The cotter pins in this Standard are similar to the ISO 1234:1997 standard pins. Dimensional differences between this Standard and ISO 1234:1997 are an approximate head height dimension, which is not called for in this Standard, and the wire width dimensions, which are not called out in the ISO Standard. These differences will not affect interchangeability of cotter pins manufactured to the requirements of either.

1.3 Dimensions

All dimensions in this Standard are given in millimeters, unless otherwise specified. Dimensions and tolerances are in accordance with ASME Y14.5M.

1.4 Responsibility

The responsible party for the performance of the products within the scope of this Standard is the organization that supplies the components to the purchaser and certifies or represents that the component was manufactured, tested, and inspected in accordance with this specification and meets all of its requirements.

1.5 Inspection and Quality Assurance

Unless otherwise specified by the purchaser, acceptability shall be based on conformance with the requirements specified in ASME B18.18.1M.

1.6 Terminology

For definitions of terms relating to pins or features thereof used in this Standard, refer to ASME B18.12.

1.7 Referenced Standards

The following is a list of publications referenced in this Standard.

ASME B18.12, Glossary of Terms for Mechanical Fasteners

ASME B18.18.1M, Inspection and Quality Assurance for General Purpose Fasteners

ASME B18.24.3, Part Identifying Number (PIN) Code System Standard for B18 Nonthreaded Products

ASME Y14.5M, Dimensioning and Tolerancing

Publisher: American Society of Mechanical Engineers (ASME), Three Park Avenue, New York, NY 10016; Order Department: 22 Law Drive, Box 2300, Fairfield, NJ 07007

ASTM E 30, Chemical Analysis of Steel, Cast Iron, Open-Hearth Iron, and Wrought Iron

Publisher: American Society for Testing and Materials (ASTM), 100 Barr Harbor Drive, West Conshohocken, PA 19428

ISO 1234:1997, Split Pins

Publisher: International Organization for Standardization (ISO), 1 rue de Varembé, Case Postale 56, CH-1211, Genevè 20, Switzerland/Suisse

2 GENERAL DATA

2.1 Application

The cotter pins specified are intended for use in pinned bolt and nut assemblies or other type of free fitting pinned assemblies in general applications.

Previous page is blank.

Copyright ASME International
Provided by IHS under license with ASME
No reproduction or networking permitted without license from IHS
Not for Resale

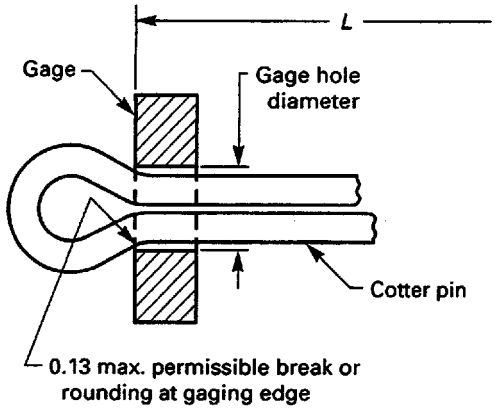

FIG. 1 COTTER PIN LENGTH GAGE

2.2 Head Design

A degree of leeway shall be permissible in the design of the head provided; however, the minimum outside diameter is maintained as specified in Table 2.

2.3 Length

2.3.1 Measurement. The length of pin, *L*, shall be measured, parallel to the axis of the pin, from the plane of contact of a gage with the head of the pin to the end of the prong or pin as depicted in the illustrations for the respective point types (see Fig. 1). The gage shall have a hole equal to the specified gage hole diameter within a tolerance of ±0.03 mm (see Table 2). The permissible break or rounding at the gaging edges of gaging holes shall not exceed 0.13 mm. The pin shall be inserted into the gage with finger pressure (force not to exceed 2.2 N).

Where pins having point types other than those illustrated herein are gaged, the length, *L*, shall be measured from the plane of contact of the gage with the end of the shortest prong.

2.3.2 Tolerance on Length. The tolerance on length of cotter pins shall be as specified in Table 1.

2.3.3 Preferred Lengths. Table 3 depicts the preferred sizes and lengths of pins that are normally available. Other sizes and lengths are produced, as required by the purchaser.

2.4 Prongs

2.4.1 Preferred Points. The preferred point type shall be the extended prong — square cut or hammer lock design illustrated, as specified by the purchaser. Variations of the extended prong design and other types of points are also available, subject to mutual agreement between the purchaser and manufacturer.

TABLE 1 LENGTH TOLERANCE

Nominal Pin Length	Tolerance on Length
28 or less	±1.0
Over 28 through 80	±1.5
Over 80	±2.0

GENERAL NOTE: Dimensions are in millimeters.

2.4.2 Prong Alignment. The ends of the pins shall not be open, and any gaps occurring between the prongs along the shank portion of pins beyond the end shall not exceed to 0.4 mm for pins 8 mm and over. The misalignment of prongs over the entire length of the shank shall not stop the pin from being inserted into the gaging hole.

2.5 Material and Test

2.5.1 Material. Low carbon steel shall be used unless otherwise specified as agreed upon between the manufacturer and purchaser.

2.5.2 Analysis. Chemical composition determinations shall be made in accordance with methods given in ASTM E 30 when composition verification is specified.

2.5.3 Ductility. Each prong of the cotter pin shall be capable of withstanding being bent back upon itself once with no visible indication of fracture occurring at the point of bend.

2.5.4 Wire Section. Cotter pins are manufactured from approximately half-round wire, and it is desirable that the flat side of the wire have a small degree of rounding at the edges rather than sharp corners.

2.6 Finish

Unless otherwise specified by the purchaser, cotter pins shall be supplied with a plain (as processed) finish, not plated or coated. Other finishes, where required, shall be subject to agreement between the manufacturer and purchaser.

2.7 Workmanship

Cotter pins shall be free from excessive burrs, cracks, loose scale, sharp edges, and all other defects affecting their serviceability.

Copyright ASME International
Provided by IHS under license with ASME
No reproduction or networking permitted without license from IHS
Not for Resale

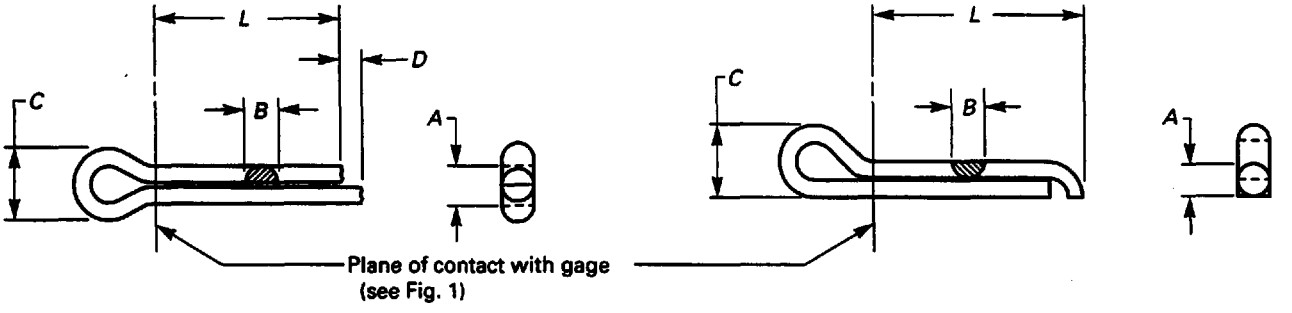

Extended Prong Square Cut Type **Hammer Lock Type**

TABLE 2 DIMENSIONS OF COTTER PINS

Nominal Size or Basic Diameter	Total Shank Diameter, *A* [Note (1)]		Wire Width, *B*		Min. Head Diameter, *C*	Min. Extended Prong Length, *D*	Gage Hole Diameter, ±0.03
	Max.	Min.	Max.	Min.			
0.6	0.5	0.4	0.5	0.4	0.9	0.8	0.60
0.8	0.7	0.6	0.7	0.6	1.2	0.8	0.80
1.0	0.9	0.8	0.9	0.7	1.6	0.8	1.00
1.2	1.0	0.9	1.0	0.8	1.7	1.2	1.20
1.6	1.4	1.3	1.4	1.1	2.4	1.2	1.60
2.0	1.8	1.7	1.8	1.4	3.2	1.2	2.00
2.5	2.3	2.1	2.3	1.7	4.0	1.2	2.50
3.2	2.9	2.7	2.9	2.2	5.1	1.6	3.20
4.0	3.7	3.5	3.7	2.8	6.5	2.0	4.00
5.0	4.6	4.4	4.6	3.5	8.0	2.0	5.00
6.3	5.9	5.7	5.9	4.6	10.3	2.0	6.30
8.0	7.5	7.3	7.5	5.9	13.1	2.0	8.00
10.0	9.5	9.3	9.5	6.7	16.6	3.2	10.00
13.0	12.4	12.1	12.4	9.4	21.7	3.2	13.00
16.0	15.4	15.1	15.4	12.0	27.0	3.2	16.00
20.0	19.3	19.0	19.3	14.5	33.8	3.2	20.00

GENERAL NOTE: Dimensions are in millimeters.

NOTE:

(1) Total shank diameter, *A* , is two times wire thickness. For additional requirements refer to section 2, titled General Data.

2.8 Designation

2.8.1 Cotter pins shall be designated by the following data, in the sequence shown: product name (noun first), nominal size (decimal equivalent), pin length, point type, material, and protective finish, if required.

See the following examples:

EXAMPLES:

(1) Pin, Cotter, 1.6 mm × 25 mm, Extended Prong Type, Steel, Zinc Plated.

(2) Pin, Cotter, 4 mm × 32 mm, Hammer Lock Type, Corrosion Resistant Steel.

2.8.2 For a recommended part identifying numbering (PIN) system, see ASME B18.24.3.

Copyright ASME International
Provided by IHS under license with ASME
No reproduction or networking permitted without license from IHS
Not for Resale

TABLE 3 PREFERRED LENGTHS

Length, *L*	Nominal Pin Size								
	1.0	1.2	1.6	2.0	2.5	3.2	4.0	5.0	6.3
8	X	X	...	...	...	...	...	...	...
12	...	X	X	X	X	...	...	...	...
16	...	X	X	X	X	X	...	...	...
22	...	X	X	X	X	X	X	X	...
28	...	X	X	X	X	X	X	X	...
36	...	...	...	X	X	X	X	X	X
45	...	...	...	...	X	X	X	X	X
56	...	...	...	...	...	X	X	X	X
63	...	...	...	...	...	...	X	X	X
80	...	...	...	...	...	...	X	X	X

GENERAL NOTE: Dimensions are in millimeters.

Copyright ASME International
Provided by IHS under license with ASME
No reproduction or networking permitted without license from IHS
Not for Resale

ASME B18.8.7M-2000

1 Introductory Notes 9

2 General Data 10

Tables

1 Dimensions of Headless Clevis Pins 11
2 Nominal Length Between Hole Centers, L_h 12
3 Length Tolerance 14
4 Length Between Hole Centers Tolerance 14
5 Hole to Pin Position Tolerance 14

Nonmandatory Appendix

A Calculations for Hole Location 15

Copyright ASME International
Provided by IHS under license with ASME
No reproduction or networking permitted without license from IHS
Not for Resale

HEADLESS CLEVIS PINS

(Metric Series)

1 INTRODUCTORY NOTES

1.1 Scope

1.1.1 This Standard covers the complete dimensional and general data for two types, A and B, of metric series headless clevis pins intended for general applications and recognized as an American National Standard.

Type A headless clevis pins are without holes.

Type B headless clevis pins specified herein are with two holes intended for use with cotter pins; however, a means is provided to specify other hole sizes when required for use with other types of pins.

1.1.2 The inclusion of dimensional data in this Standard is not intended to imply that all sizes described are production stock items. Consumers should consult with suppliers concerning lists of stock production items.

1.2 Comparison With ISO 2340:1986

Unhardened steel clevis pins produced to this Standard are functionally interchangeable with pins of the same nominal size that conform to ISO 2340:1986. Many of the recommended hole spacings in this Standard provide greater lengths from the holes to the ends of the pins than the minimums specified in ISO 2340:1986.

1.3 Dimensions

1.3.1 All dimensions in this Standard are in millimeters (mm), and apply before any coating, unless stated otherwise.

1.3.2 Symbols specifying geometric characteristics are in accordance with ASME Y14.5M.

1.3.3 Symbols specifying surface texture are in accordance with ASME Y14.36.

1.4 Terminology

For definitions of terms relating to fasteners or component features thereof used in this Standard, refer to ASME B18.12.

1.5 Referenced Standards

The following is a list of publications referenced in this Standard.

ASME B4.2, Preferred Metric Limits and Fits

ASME B18.12, Glossary of Terms for Mechanical Fasteners

ASME B18.18.1M, Inspection and Quality Assurance for General Purpose Fasteners

ASME B18.24.3, Part Identifying Number (PIN) Code System Standard for B18 Nonthreaded Products

ASME B46.1, Surface Texture

ASME Y14.5M, Dimensioning and Tolerancing

ASME Y14.36, Surface Texture Symbols

Publisher: American Society of Mechanical Engineers (ASME), Three Park Avenue, New York, NY 10016; Order Department: 22 Law Drive, Box 2300, Fairfield, NJ 07007

ISO 2340:1986, Clevis Pins Without Head

Publisher: International Organization for Standardization (ISO), 1 rue de Varembé, Case Postale 56, CH-1211, Genevè 20, Switzerland/Suisse

1.6 Designation

1.6.1 Pins conforming to this Standard shall be designated by the following data, preferably in the sequence shown:

(a) product name

(b) ASME document number

(c) type, A or B, preceded by a dash

(d) nominal shank diameter, D, preceded by a dash

(e) diameter tolerance class, if other than standard

(f) nominal pin length, L, preceded by "x"

(g) for type B, hole size, D_1, if other than standard preceded by "x"

Previous page is blank.

Copyright ASME International
Provided by IHS under license with ASME
No reproduction or networking permitted without license from IHS
Not for Resale

(h) for type B, length between hole centers, L_h, preceded by x

(i) material, hardened if required, preceded by a dash

(j) finish, if other rust preventive lubricant, preceded by a dash

EXAMPLES:

(1) Headless Pin B18.8.7M-B-20 × 100 × 90-Steel-Zinc Plated per ASTM B 633 Fe/Zn 5 type II.

(2) Headless Pin B18.8.7M-B-20 × 100 × 6.3 × 80-Steel, Case Hardened.

1.6.2 For a recommended part identifying numbering (PIN) system, see ASME B18.24.3.

2 GENERAL DATA

2.1 Pin Diameter

Unless otherwise specified, the diameters of pins, D, shall be within the limits specified in Table 1. The surface roughness of the pin diameter shall not exceed 3.2 μm arithmetical average in accordance with ASME B46.1. The standard pin diameter limits specified in Table 1 are in accord with tolerance class H11 of ASME B4.2. If, in special cases, other pin diameter limits are required, they should be selected from ASME B4.2 (e.g., tolerance class A11, C11, or F8).

2.2 Pin Length

The standard nominal pin lengths, L, are specified in Table 2. The tolerances on pin length are specified in Table 3.

2.3 Points

The points of the pins shall be chamfered 30 deg to the point diameters, D_p, specified in Table 1.

2.4 Hole Diameter for Type B Pins

The hole shall be countersunk or otherwise relieved at both ends to break the corners and remove all burrs.

Unless otherwise specified, the hole diameter, D_1, shall be within the limits specified in Table 1. The standard nominal hole diameters, specified in Table 1, correspond to the nominal diameters of the recommended cotter pins. The hole diameter limits, specified in Table 1, are in accordance with tolerance class H13 of ASME B4.2.

2.5 Hole Location for Type B Pins

2.5.1 Length Between Hole Centers. The standard nominal lengths, L_h, between hole centers are specified in Table 2, and are recommended for use with the standard hole sizes. The tolerances on the length between hole centers are specified in Table 4.

If larger than standard holes are specified, it may be necessary to specify a shorter length, L_h, between hole centers to maintain adequate material between the edge of the hole and the end of the pin, or to avoid a sharp edge between the countersunk hole and the end chamfer. See Appendix A.

2.5.2 Position of Hole. The axis of the hole shall be within the positional tolerance specified in Table 5 with respect to the axis of the pin, determined over a length from the center of the hole equal to the nominal pin diameter, D, at maximum material condition, and perpendicular to the axis of the pin within 2 deg.

2.6 Material and Hardness

Unhardened clevis pins shall be furnished unless hardened is specified.

2.6.1 Unhardened Clevis Pins. Unhardened steel clevis pins shall be made from steel with a maximum carbon content of 0.28%, and shall have hardness of 125–245 HV, 119–234 HB, or 69–99 HRB.

2.6.2 Hardened Clevis Pins. Hardened steel clevis pins shall be marked with a capital "H" on one end. Unless otherwise specified by the purchaser, hardened clevis pins may be either through hardened or case hardened as follows:

(a) Through hardened clevis pins shall be made from SAE 52100, AISI E52100, UNS G52986, or equivalent alloy steel, and shall have a hardness of 550–650 HV30, 52–58 HRC, or 517–611 HB.

(b) Case hardened clevis pins shall be made from low carbon steel, such as SAE/AISI 1010, UNS G10100, or SAE/AISI 12L14, UNS G12144, or equivalent, and shall have a surface hardness of 600–700 HV1 or 88–90 HR15N, and a minimum hardness at case depth of 0.25–0.4 mm of 550 HV1 or 87 HR15N.

2.7 Workmanship

Clevis pins shall be free from burrs, sharp edges, loose scale, and all other detrimental defects.

Copyright ASME International
Provided by IHS under license with ASME
No reproduction or networking permitted without license from IHS
Not for Resale

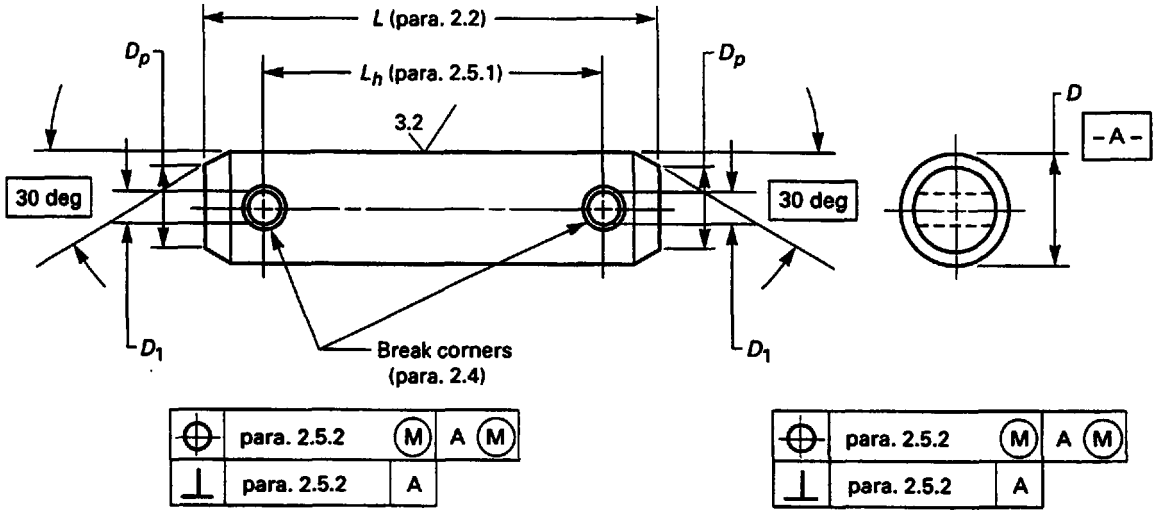

TABLE 1 DIMENSIONS OF HEADLESS CLEVIS PINS

Types A and B					Type B Only		
Pin Diameter, D			Point Diameter, D_p		Hole Diameter, D_1		
Nominal	Max.	Min.	Max.	Min.	Nominal	Max.	Min.
3	3.00	2.94	2.2	1.8	0.8	0.94	0.80
4	4.000	3.925	3.2	2.8	1	1.14	1.00
5	5.000	4.925	3.3	2.7	1.2	1.34	1.20
6	6.000	5.925	4.3	3.7	1.6	1.74	1.60
8	8.00	7.91	6.3	5.7	2	2.14	2.00
10	10.00	9.91	8.3	7.7	3.2	3.38	3.20
12	12.00	11.90	9.5	8.5	3.2	3.38	3.20
14	14.00	13.90	11.5	10.5	4	4.18	4.00
16	16.00	15.90	13.5	12.5	4	4.18	4.00
18	18.00	17.90	15.5	14.5	5	5.18	5.00
20	20.00	19.87	16.6	15.4	5	5.18	5.00
22	22.00	21.87	18.6	17.4	5	5.18	5.00
24	24.00	23.87	20.6	19.4	6.3	6.52	6.30
27	27.00	26.87	23.6	22.4	6.3	6.52	6.30
30	30.00	29.87	26.6	25.4	8	8.22	8.00
33	33.00	32.84	29.6	28.4	8	8.22	8.00
36	36.00	35.84	32.6	31.4	8	8.22	8.00
40	40.00	39.84	36.6	35.4	8	8.22	8.00
45	45.00	44.84	41.6	40.4	10	10.22	10.00
50	50.00	49.84	46.6	45.4	10	10.22	10.00
55	55.00	54.81	50.0	48.0	10	10.22	10.00
60	60.00	59.81	55.0	53.0	10	10.22	10.00
70	70.00	69.81	65.0	63.0	13	13.27	13.00
80	80.00	79.81	75.0	73.0	13	13.27	13.00
90	90.00	89.78	85.0	83.0	13	13.27	13.00
100	100.00	99.78	95.0	93.0	13	13.27	13.00
See para.	2.1	2.1	2.3	2.3	2.4	2.4	2.4

GENERAL NOTE: Dimensions are in millimeters.

Copyright ASME International
Provided by IHS under license with ASME
No reproduction or networking permitted without license from IHS
Not for Resale

TABLE 2 NOMINAL LENGTH BETWEEN HOLE CENTERS, L_h

Nominal Length, L	Nominal Diameter, D												
	3	4	5	6	8	10	12	14	16	18	20	22	24
8	3.0	2.8	...	...	...	...	...	...	...	...	...	...	...
10	4.9	4.8	2.3		...	...	...	...	...	...	...	...	...
12	6.5	6.4	4.2	3.8	...	...	...	...	...	...	...	...	...
14	8.5	8.4	6.2	5.8	...	...	...	...	...	...	...	...	...
16	10.5	10.5	8.2	7.7	6.4	...	...	...	...	...	...	...	...
18	12.5	12.5	10.0	9.7	8.4	...	...	...	...	...	...	...	...
20	14.5	14.5	12.0	11.5	10.5	8.9	...	...	...	...	...	...	...
22	16.5	16.5	14.0	13.5	12.5	11.0	...	...	...	...	...	...	...
24	18.5	18.5	16.0	15.5	14.5	13.0	10.5	...	...	...	...	...	...
26	20.5	20.0	18.0	17.5	16.5	15.0	12.5	...	...	...	...	...	...
28	22.5	22.0	20.0	19.5	18.5	17.0	14.5	13.5	...	...	...	...	...
30	24.5	24.0	22.0	21.5	20.5	18.5	16.5	15.5	...	...	...	...	...
32	...	26.0	24.0	23.5	22.5	20.5	18.5	17.5	17.5	...	...	...	...
35	...	29.0	27.0	26.5	25.5	23.5	21.5	20.5	20.5	19.5	...	...	...
40	...	34.0	32.0	31.5	30.5	28.5	26.5	25.5	25.5	24.5	22.5	...	...
45	...	...	37.0	36.5	35.0	33.5	31.5	30.5	30.5	29.5	27.5	27.5	...
50	...	...	42.0	41.5	40.0	38.5	36.5	35.5	35.5	34.0	32.5	32.5	31.0
55	...	...	...	46.0	45.0	43.0	41.0	40.0	40.0	39.0	37.0	37.0	35.5
60	...	...	...	51.0	50.0	48.0	46.0	45.0	45.0	44.0	42.0	42.0	40.5
65	...	...	...	...	54.5	53.0	50.5	50.0	50.0	49.0	47.0	47.0	45.5
70	...	...	...	...	59.5	58.0	55.5	55.0	55.0	53.5	52.0	52.0	50.5
75	...	...	...	...	64.5	63.0	60.5	60.0	60.0	58.5	57.0	57.0	55.5
80	...	...	...	...	69.5	68.0	65.5	65.0	65.0	63.5	62.0	62.0	60.5
85	...	...	...	...	...	73.0	70.5	70.0	70.0	68.5	67.0	67.0	65.5
90	...	...	...	...	...	78.0	75.5	75.0	75.0	73.5	72.0	72.0	70.5
95	...	...	...	...	...	83.0	80.5	80.0	80.0	78.5	77.0	77.0	75.5
100	...	...	...	...	...	88.0	85.5	84.5	85.0	83.5	81.5	82.0	80.0
120	...	...	...	...	...	...	106.0	105.0	105.0	104.0	102.0	102.0	100.0
140	...	...	...	...	...	...	...	125.0	125.0	123.0	122.0	122.0	120.0
160	...	...	...	...	...	...	...	...	145.0	143.0	142.0	142.0	140.0
180	...	...	...	...	...	...	...	...	...	163.0	162.0	162.0	160.0
200	...	...	...	...	...	...	...	...	...	...	181.0	182.0	180.0
220	...	...	...	...	...	...	...	...	...	...	...	202.0	200.0
240	...	...	...	...	...	...	...	...	...	...	...	...	220.0
260	...	...	...	...	...	...	...	...	...	...	...	...	...
280	...	...	...	...	...	...	...	...	...	...	...	...	...
300	...	...	...	...	...	...	...	...	...	...	...	...	...

GENERAL NOTES:
(a) See para. 2.5.2.
(b) Dimensions are in millimeters.

2.8 Finish

Unless otherwise specified, the finish of the pins shall be plain as processed for unhardened steel pins, and in general, black oxide for hardened steel pins

The pins shall be delivered in a clean condition and lightly oiled with rust preventive lubricant.

Hardened steel pins that are plated or coated and subject to hydrogen embrittlement shall be baked for a suitable time at a temperature that will obviate such embrittlement. Baking shall be accomplished as soon as possible following the plating or coating process inasmuch as delay is detrimental to achievement of the desired results.

2.9 Inspection and Quality Assurance

Unless otherwise specified acceptability of clevis pins shall be determined based on ASME B18.18.1M.

Copyright ASME International
Provided by IHS under license with ASME
No reproduction or networking permitted without license from IHS
Not for Resale

TABLE 2 NOMINAL LENGTH BETWEEN HOLE CENTERS, L_h

Nominal Length, *L*	Nominal Diameter, *D*												
	27	30	33	36	40	45	50	55	60	70	80	90	100
8	...	...	...	...	...	...	...	...	...	...	...	...	...
10	...	...	...	...	...	...	...	...	...	...	...	...	...
12	...	...	...	...	...	...	...	...	...	...	...	...	...
14	...	...	...	...	...	...	...	...	...	...	...	...	...
16	...	...	...	...	...	...	...	...	...	...	...	...	...
18	...	...	...	...	...	...	...	...	...	...	...	...	...
20	...	...	...	...	...	...	...	...	...	...	...	...	...
22	...	...	...	...	...	...	...	...	...	...	...	...	...
24	...	...	...	...	...	...	...	...	...	...	...	...	...
26	...	...	...	...	...	...	...	...	...	...	...	...	...
28	...	...	...	...	...	...	...	...	...	...	...	...	...
30	...	...	...	...	...	...	...	...	...	...	...	...	...
32	...	...	...	...	...	...	...	...	...	...	...	...	...
35	...	...	...	...	...	...	...	...	...	...	...	...	...
40	...	...	...	...	...	...	...	...	...	...	...	...	...
45	...	...	...	...	...	...	...	...	...	...	...	...	...
50	...	...	...	...	...	...	...	...	...	...	...	...	...
55	35.5	...	...	...	...	...	...	...	...	...	...	...	...
60	40.5	38.5	...	...	...	...	...	...	...	...	...	...	...
65	45.5	43.5	43.5	...	...	...	...	...	...	...	...	...	...
70	50.5	48.5	48.5	49.0	...	...	...	...	...	...	...	...	...
75	55.5	53.5	53.5	53.5	...	...	...	...	...	...	...	...	...
80	60.5	58.5	58.5	58.5	59.0	...	...	...	...	...	...	...	...
85	65.5	63.5	63.5	63.5	63.5	...	...	...	...	...	...	...	...
90	70.5	68.5	68.5	68.5	68.5	66.5	...	...	...	...	...	...	...
95	75.5	73.5	73.5	73.5	73.5	71.5	...	...	...	...	...	...	...
100	80.0	78.5	78.5	78.5	79.0	76.5	75.5	...	...	...	...	...	...
120	100.0	98.5	98.5	98.5	98.5	96.5	95.5	91.5	91.5	...	...	...	...
140	120.0	118.0	118.0	118.0	119.0	116.0	115.0	111.0	111.0	108.0	...	...	...
160	140.0	138.0	138.0	138.0	139.0	136.0	135.0	131.0	131.0	128.0	128.0	...	...
180	160.0	158.0	158.0	158.0	159.0	156.0	155.0	151.0	151.0	148.0	148.0	148.0	...
200	180.0	178.0	178.0	178.0	178.0	176.0	175.0	171.0	171.0	168.0	168.0	168.0	169.0
220	200.0	198.0	198.0	198.0	198.0	196.0	195.0	191.0	191.0	188.0	188.0	188.0	188.0
240	220.0	218.0	218.0	218.0	218.0	216.0	215.0	211.0	211.0	208.0	208.0	208.0	208.0
260	240.0	238.0	238.0	238.0	238.0	236.0	235.0	231.0	231.0	228.0	228.0	228.0	228.0
280	...	258.0	258.0	258.0	258.0	256.0	255.0	251.0	251.0	248.0	248.0	248.0	248.0
300	...	278.0	278.0	278.0	278.0	276.0	275.0	271.0	271.0	268.0	268.0	268.0	268.0

Copyright ASME International
Provided by IHS under license with ASME
No reproduction or networking permitted without license from IHS
Not for Resale

TABLE 3 LENGTH TOLERANCE

Nominal Length, *L*		
Over	Through	Length Tolerance
...	10	±0.25
10	50	±0.50
50	...	±0.75

GENERAL NOTE: Dimensions are in millimeters.

TABLE 4 LENGTH BETWEEN HOLE CENTERS TOLERANCE

Nominal Length Between Hole Center, L_h		Length Between Hole Centers Tolerance Plus (Nothing Minus)
Over	Through	
...	3	+0.25
3	6	+0.3
6	10	+0.36
10	18	+0.43
18	30	+0.52
30	50	+0.62
50	80	+0.74
80	120	+0.87
120	180	+1
180	250	+1.15
250	315	+1.3
315	400	+1.4
400	500	+1.55

GENERAL NOTE: Dimensions are in millimeters.

TABLE 5 HOLE TO PIN POSITION TOLERANCE

Nominal Pin Diameter, *D*		Hole to Pin Position Tolerance at MMC, Max. Width
Over	Through	
...	3	0.28
3	6	0.36
6	10	0.44
10	18	0.54
18	30	0.66
30	50	0.78
50	80	0.92
80	100	1.08

GENERAL NOTE: Dimensions are in millimeters.

Copyright ASME International
Provided by IHS under license with ASME
No reproduction or networking permitted without license from IHS
Not for Resale

NONMANDATORY APPENDIX A
CALCULATIONS FOR HOLE LOCATION

This Appendix provides information for calculation of hole locations for hole diameter/pin diameter combinations other than those shown in Table 1. The objective of these calculations is to avoid overlap of the hole chamfer and the pin end chamfer.

The nominal length, L_h, from hole center to hole center should satisfy both of the following:

$$L_h \le L - (2C + 2X - D_1) - \{D - [D^2 - (D_1 + 2X)^2]^{0.5}\} - 1.5T_3 - T_4$$

and

$$L_h \le L - 2L_e$$

where

$\{\ \}$ = calculation of two times hole chamfer length, above hole chamfer width, X, with 90 deg countersink.
C = point chamfer length. See Table A1.
D = nominal pin (shank) diameter. See para. 2.1 and Table 1.
D_1 = nominal hole diameter. See para. 2.4 and Table 1.
L = nominal pin length. See para. 2.2 and Table 2.
L_e = minimum length from hole to end per ISO 2340. See Table A1.
L_h = nominal length between hole centers rounded to one decimal. See Table 2.
T_3 = minus tolerance on pin length, L. See Table 3.
T_4 = plus tolerance on length between hole centers, L_h. See Table 4.
X = chamfer on side of hole. See Table A1.

The resulting values should then be rounded as follows:

$L_h < 10$	Round to the nearest 0.1 mm.
$10 \le L_h < 100$	Round to the nearest 0.5 mm.
$100 \le L_h$	Round to the nearest 1 mm.

EXAMPLE:

$D = 20$
$L = 100$
$D_1 = 6.3$
$C = 4.0$
$X = 1.0$

TABLE A1 DESIGN FEATURES FOR HOLE LOCATION

Pin Diameter, D	Point Chamfer Length, C	Chamfer on Side of Hole, X [Note (1)]	Min. End to Hole per ISO 2340, L_e
3	1.0	0.5	1.6
4	1.0	0.5	2.2
5	2.0	0.5	2.9
6	2.0	0.5	3.2
8	2.0	0.8	3.5
10	2.0	0.8	4.5
12	3.0	1.0	5.5
14 and 16	3.0	1.0	6.0
18	3.0	1.0	7.0
20 and 22	4.0	1.0	8.0
24 and 27	4.0	1.0	9.0
30 through 40	4.0	1.0	10.0
45	4.0	1.0	12.0
50	4.0	1.5	12.0
55 and 60	6.0	1.5	14.0
70 through 100	6.0	1.5	16.0

GENERAL NOTE: Dimensions are in millimeters.
NOTE:
(1) Values are based on an assumed 90 deg countersink.

$T_3 = 0.75$
$T_4 = 0.87$

$L_h \le L - (2C + 2X + D_1) - \{D - [D^2 - (D_1 + 2X)^2]^{0.5}\} - 1.5T_3 - T_4$

$100 - (8 + 2 + 6.3) - \{20 - [400 - 68.89]^{0.5}\} - 1.5(0.75) - 0.87$

$100 - 16.3 - \{20 - [18.196]\} - 1.995$

$100 - 16.3 - 1.804 - 1.995$

79.90

L_h rounded ≤ 80.0

and

$L_h \le L - 2L_e$

$100 - 2(8)$

84

Therefore, the specified hole spacing, L_h, should not be greater than 80 mm.

Copyright ASME International
Provided by IHS under license with ASME
No reproduction or networking permitted without license from IHS
Not for Resale

ASME B18.8.8M-2000

1 Introductory Notes 19

2 General Data 20

Tables

1 Dimensions of Types A and B Headed Clevis Pins 21
2 Nominal Head to Hole Center, L_h 24
3 Length Tolerance 26
4 Length From Head to Hole Center 26
5 Hole to Shank Position Tolerance 26

Nonmandatory Appendix

A Calculations for Hole Location 27

Previous page is blank.

Copyright ASME International
Provided by IHS under license with ASME
No reproduction or networking permitted without license from IHS
Not for Resale

HEADED CLEVIS PINS

(Metric Series)

1 INTRODUCTORY NOTES

1.1 Scope

1.1.1 This Standard covers the complete dimensional and general data for two types, A and B, of metric series headed clevis pins intended for general applications and recognized as an American National Standard.

Type A headed clevis pins are without holes.

Type B headed clevis pins specified herein are with holes intended for use with cotter pins; however, a means is provided to specify other hole sizes when required for use with other types of pins.

1.1.2 The inclusion of dimensional data in this Standard is not intended to imply that all sizes described are production stock items. Consumers should consult with suppliers concerning lists of stock production items.

1.2 Comparison With ISO 2341:1986

Unhardened steel clevis pins produced to this Standard are functionally interchangeable with pins of the same nominal size that conform to ISO 2341:1986. Many of the recommended hole spacings in this Standard provide greater lengths from the holes to the ends of the pins than the minimums specified in ISO 2341:1986.

1.3 Dimensions

1.3.1 All dimensions in this Standard are in millimeters (mm), and apply before any coating, unless stated otherwise.

1.3.2 Symbols specifying geometric characteristics are in accordance with ASME Y14.5M.

1.3.3 Symbols specifying surface texture are in accordance with ASME Y14.36.

1.4 Terminology

For definitions of terms relating to fasteners or component features thereof used in this Standard, refer to ASME B18.12.

1.5 Referenced Standards

The following is a list of publications referenced in this Standard.

ASME B4.2, Preferred Metric Limits and Fits

ASME B18.12, Glossary of Terms for Mechanical Fasteners

ASME B18.18.1M, Inspection and Quality Assurance for General Purpose Fasteners

ASME B18.24.3, Part Identifying Number (PIN) Code System Standard for B18 Nonthreaded Products

ASME B46.1, Surface Texture

ASME Y14.5M, Dimensioning and Tolerancing

ASME Y14.36, Surface Texture Symbols

Publisher: American Society of Mechanical Engineers (ASME), Three Park Avenue, New York, NY 10016; Order Department: 22 Law Drive, Box 2300, Fairfield, NJ 07007

ISO 2341:1986, Clevis Pins With Head

Publisher: International Organization for Standardization (ISO), 1 rue de Varembé, Case Postale 56, CH-1211, Genevè 20, Switzerland/Suisse

1.6 Designation

1.6.1 Pins conforming to this Standard shall be designated by the following data, preferably in the sequence shown:

(a) product name

(b) ASME document number

(c) type, A or B, preceded by a dash

(d) nominal shank diameter, D, preceded by a dash

(e) diameter tolerance class, if other than standard

(f) nominal pin length, L, preceded by "x"

(g) for type B, hole size, D_1, if other than standard preceded by "x"

Previous page is blank.

Copyright ASME International
Provided by IHS under license with ASME
No reproduction or networking permitted without license from IHS
Not for Resale

(h) for type B, head to hole center, L_h, preceded by "x"

(i) material, hardened if required, preceded by a dash

(j) finish, if other than rust preventive lubricant, preceded by a dash

EXAMPLES:

(1) Headed Pin B18.8.8M-B-20 × 100 × 90–Steel–Zinc Plated per ASTM B 633 Fe/Zn 5 Type II.

(2) Headed Pin B18.8.8M-B-20 × 100 × 6.3 × 89,5–Steel, Case Hardened.

1.6.2 For a recommended part identifying numbering (PIN) system, see ASME B18.24.3.

2 GENERAL DATA

2.1 Shank Diameter

Unless otherwise specified, the shank diameter, D, shall be within the limits specified in Table 1. The surface roughness of the shank shall not exceed 3.2 μm arithmetical average in accordance with ASME B46.1. The standard shank diameter limits specified in Table 1 are in accordance with tolerance class H11 of ASME B4.2. If, in special cases, other shank diameter limits are required, they should be selected from ASME B4.2 (e.g., tolerance class A11, C11, or F8).

2.2 Head

2.2.1 Top of Head. The top of the head shall be flat and chamfered or rounded at the periphery.

2.2.2 Bearing Surface. The bearing surface of the head within a diameter equal to 0.8 times the maximum head diameter, D_k, shall be flat and perpendicular to the axis of the shank, determined over a length under the head equal to the nominal shank diameter, within the circular runout, t_1, specified in Table 1.

2.2.3 Head Periphery. The periphery of the head shall be within the circular runout, t_2, with respect to the axis of the shank diameter, determined over a length under the head equal to the nominal shank diameter.

2.3 Pin Length

The pin length, L, is the distance, parallel to the shank axis, from the bearing surface of the head to the end of the point. The standard nominal pin lengths are specified in Table 2. The tolerances on pin length are specified in Table 3.

2.4 Points

The points of the pins shall be chamfered 30 deg to the point diameters, D_p, specified in Table 1.

2.5 Hole Diameter for Type B Pins

The hole shall be countersunk or otherwise relieved at both ends to break the corners and remove all burrs.

Unless otherwise specified, the hole diameter, D_1, shall be within the limits specified in Table 1. The standard nominal hole diameters, specified in Table 1, correspond to the nominal diameters of the recommended cotter pins. The hole diameter limits, specified in Table 1, are in accordance with tolerance class H13 of ASME B4.2.

2.6 Hole Location for Type B Pins

2.6.1 Head to Hole Center. The standard nominal lengths, L_h, from the bearing surface of the head to the center of the hole are specified in Table 2, and are recommended for use with the standard hole sizes. The tolerances on the head to hole center dimensions are specified in Table 4.

If a larger than standard hole is specified, it may be necessary to specify shorter length, L_h, from head to hole center to maintain adequate material between the edge of the hole and the end of the pin, or to avoid a sharp edge between the countersunk hole and the end chamfer. See Appendix A.

2.6.2 Position of Hole. The axis of the hole shall be within the positional tolerance specified in Table 5 with respect to the axis of the shank, determined over a length from the center of the hole equal to the nominal shank diameter, D, at maximum material condition, and perpendicular to the axis of the pin within 2 deg.

2.7 Material and Hardness

Unhardened clevis pins shall be furnished unless hardened is specified.

2.7.1 Unhardened Clevis Pins. Unhardened steel clevis pins shall be made from steel with a maximum carbon content of 0.28%, and shall have hardness of 125–245 HV, 119–234 HB, or 69–99 HRB.

2.7.2 Hardened Clevis Pins. Hardened steel clevis pins shall be marked with a capital "H" on top of the head. Unless otherwise specified by the purchaser, hardened clevis pins may be either through hardened or case hardened as follows:

Copyright ASME International
Provided by IHS under license with ASME
No reproduction or networking permitted without license from IHS
Not for Resale

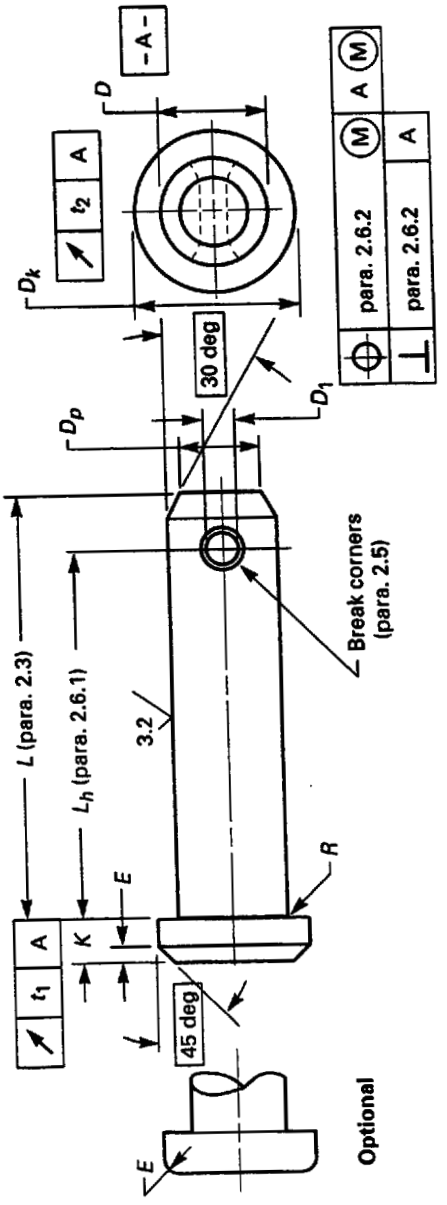

TABLE 1 ILLUSTRATION

Copyright ASME International
Provided by IHS under license with ASME
No reproduction or networking permitted without license from IHS

Not for Resale

Copyright ASME International
Provided by IHS under license with ASME
No reproduction or networking permitted without license from IHS

TABLE 1 DIMENSIONS OF TYPES A AND B HEADED CLEVIS PINS

Types A and B													Type B Only		
Shank Diameter, D			Head Diameter, D_k		Head Height, K		Approximate Head Chamfer or Radius, E	Nominal Fillet Radius, R	Max. Bearing Circular Runout Surface, t_1	Max. Head Periphery Circular Runout, t_2	Point Diameter, D_p		Hole Diameter, D_1		
Nominal	Max.	Min.	Max.	Min.	Max.	Min.					Max.	Min.	Nominal	Max.	Min.
3	3.00	2.94	5.00	4.70	1.2	0.8	0.5	0.6	0.14	0.60	2.2	1.8	0.8	0.94	0.80
4	4.000	3.925	6.00	5.70	1.2	0.8	0.5	0.6	0.17	0.60	3.2	2.8	1	1.14	1.00
5	5.000	4.925	8.00	7.64	1.8	1.4	1	0.6	0.22	0.72	3.3	2.7	1.2	1.34	1.20
6	6.000	5.925	10.00	9.64	2.2	1.8	1	0.6	0.28	0.72	4.3	3.7	1.6	1.74	1.60
8	8.00	7.91	14.00	13.57	3.2	2.8	1	0.6	0.39	0.86	6.3	5.7	2	2.14	2.00
10	10.00	9.91	18.00	17.57	4.2	3.8	1	0.6	0.50	0.86	8.3	7.7	3	3.38	3.20
12	12.00	11.90	20.00	19.48	4.2	3.8	1.5	0.6	0.56	1.04	9.5	8.5	3	3.38	3.20
14	14.00	13.90	22.00	21.48	4.2	3.8	1.5	0.6	0.61	1.04	11.5	10.5	4	4.18	4.00
16	16.00	15.90	25.00	24.48	4.7	4.3	1.5	0.6	0.70	1.04	13.5	12.5	4	4.18	4.00
18	18.00	17.90	28.00	27.48	5.2	4.8	1.5	1	0.78	1.04	15.5	14.5	5	5.18	5.00
20	20.00	19.87	30.00	29.48	5.2	4.8	2	1	0.84	1.04	16.6	15.4	5	5.18	5.00
22	22.00	21.87	33.00	32.38	5.7	5.3	2	1	0.92	1.24	18.6	17.4	5	5.18	5.00
24	24.00	23.87	36.00	35.38	6.2	5.8	2	1	1.01	1.24	20.6	19.4	6.3	6.52	6.30
27	27.00	26.87	40.00	39.38	6.2	5.8	2	1	1.12	1.24	23.6	22.4	6.3	6.52	6.30
30	30.00	29.87	44.00	43.38	8.3	7.7	2	1	1.23	1.24	26.6	25.4	8	8.22	8.00
33	33.00	32.84	47.00	46.38	8.3	7.7	2	1	1.31	1.24	29.6	28.4	8	8.22	8.00
36	36.00	35.84	50.00	49.38	8.3	7.7	2	1	1.40	1.24	32.6	31.4	8	8.22	8.00
40	40.00	39.84	55.00	54.26	8.3	7.7	2	1	0.77	1.48	36.6	35.4	8	8.22	8.00
45	45.00	44.84	60.00	59.26	9.3	8.7	2	1	0.84	1.48	41.6	40.4	10	10.22	10.00
50	50.00	49.84	66.00	65.26	9.3	8.7	2	1	0.92	1.48	46.6	45.4	10	10.22	10.00
55	55.00	54.81	72.00	71.26	11.4	10.6	3	1	1.01	1.48	50.0	48.0	10	10.22	10.00
60	60.00	59.81	78.00	77.26	12.4	11.6	3	1	1.09	1.48	55.0	53.0	10	13.27	10.00
70	70.00	69.81	90.00	89.13	13.4	12.6	3	1	1.26	1.74	65.0	63.0	13	13.27	13.00
80	80.00	79.81	100.00	99.13	13.4	12.6	3	1	1.40	1.74	75.0	73.0	13	13.27	13.00
90	90.00	89.78	110.00	109.13	13.4	12.6	3	1	1.54	1.74	85.0	83.0	13	13.27	13.00
100	100.00	99.78	120.00	119.13	13.4	12.6	3	1	1.68	1.74	95.0	93.0	13	13.27	13.00
See para.	2.1	2.1	...	...	...	...	2.2.1	...	2.2.2	2.2.3	2.4	2.4	2.5	2.5	2.5

GENERAL NOTES:
(a) For reference, see Table 1 illustration on previous page.
(b) Dimensions are in millimeters.

Not for Resale

(a) Through hardened clevis pins shall be made from SAE 52100, AISI E52100, UNS G52986, or equivalent alloy steel, and shall have hardness of 550–650 HV30, 52–58 HRC, or 517–611 HB.

(b) Case hardened clevis pins shall be made from low carbon steel, such as SAE/AISI 1010, UNS G10100, or SAE/AISI 12L14, UNS G12144, or equivalent, and shall have a surface hardness of 600–700 HV1 or 88–90 HR15N, and a minimum hardness at case depth of 0.25–0.4 mm of 550 HV1 or 87 HR15N.

2.8 Workmanship

Clevis pins shall be free from burrs, sharp edges, loose scale, and all other detrimental defects.

2.9 Finish

Unless otherwise specified, the finish of the pins shall be plain as processed for unhardened steel pins, and in general, black oxide for hardened steel pins.

The pins shall be delivered in a clean condition and lightly oiled with rust preventive lubricant.

Hardened steel pins that are plated or coated and subject to hydrogen embrittlement shall be baked for a suitable time at a temperature that will obviate such embrittlement. Baking shall be accomplished as soon as possible following the plating or coating process inasmuch as delay is detrimental to achievement of the desired results.

2.10 Inspection and Quality Assurance

Unless otherwise specified, acceptability of clevis pins shall be determined based on ASME B18.18.1M.

Copyright ASME International
Provided by IHS under license with ASME
No reproduction or networking permitted without license from IHS Not for Resale

TABLE 2 NOMINAL HEAD TO HOLE CENTER, L_h

Nominal Length, L	Nominal Diameter, D												
	3	4	5	6	8	10	12	14	16	18	20	22	24
6	3.2	...	...	...	...	...	...	...	...	...	...	...	...
8	5.2	5.2	...	...	...	...	...	...	...	...	...	...	...
10	7.2	7.1	6.0	...	...	...	...	...	...	...	...	...	...
12	8.9	8.9	7.8	7.5	...	...	...	...	...	...	...	...	...
14	11.0	11.0	9.8	9.5	...	...	...	...	...	...	...	...	...
16	13.0	13.0	11.5	11.5	11.0	...	...	...	...	...	...	...	...
18	15.0	15.0	13.5	14.5	13.0	...	...	...	...	...	...	...	...
20	17.0	17.0	15.5	16.5	15.0	14.0	...	...	...	...	...	...	...
22	19.0	19.0	17.5	18.5	17.0	16.0	...	...	...	...	...	...	...
24	21.0	20.5	19.5	19.5	19.0	18.0	17.0	...	...	...	...	...	...
26	23.0	22.5	21.5	21.5	21.0	20.0	19.0	...	...	...	...	...	...
28	25.0	24.5	23.5	23.5	23.0	22.0	21.0	20.5	...	...	...	...	...
30	27.5	26.5	25.5	25.5	25.0	24.0	23.0	22.5	...	...	...	...	...
32	...	28.5	27.5	27.5	27.0	26.0	25.0	24.5	24.5	...	...	...	...
35	...	31.5	30.5	30.5	30.0	29.0	28.0	27.5	27.5	26.5	...	...	...
40	...	36.5	35.5	35.5	34.5	34.0	32.5	32.0	32.5	31.5	30.5	...	...
45	...	...	40.5	40.5	39.5	39.0	37.5	37.0	37.5	36.5	35.5	36.0	...
50	...	...	45.5	45.5	44.5	44.0	42.5	42.0	42.5	41.5	40.5	41.0	40.0
55	...	...	...	50.5	49.5	48.5	47.5	47.0	47.0	46.5	45.5	45.5	44.5
60	...	...	...	55.5	54.5	53.5	52.5	52.0	52.0	51.5	50.5	50.5	49.5
65	...	...	...	...	59.5	58.5	57.5	57.0	57.0	56.5	55.5	55.5	54.5
70	...	...	...	...	64.5	63.5	62.5	62.0	62.0	61.5	60.5	60.5	59.5
75	...	...	...	...	69.5	68.5	67.5	67.0	67.0	66.5	65.5	65.5	64.5
80	...	...	...	...	74.5	73.5	72.5	72.0	72.0	71.5	70.5	70.5	69.5
85	...	...	...	...	...	78.5	77.5	77.0	77.0	76.5	75.5	75.5	74.5
90	...	...	...	...	...	83.5	82.0	82.0	82.0	81.5	80.0	80.0	79.5
95	...	...	...	...	...	88.5	87.0	87.0	87.0	86.0	85.0	85.0	84.5
100	...	...	...	...	...	93.5	92.0	92.0	92.0	91.0	90.0	90.0	89.5
120	...	...	...	...	...	...	112.0	112.0	112.0	111.0	110.0	110.0	109.0
140	...	...	...	...	...	...	...	132.0	132.0	131.0	130.0	130.0	129.0
160	...	...	...	...	...	...	...	...	152.0	151.0	150.0	150.0	149.0
180	...	...	...	...	...	...	...	...	...	171.0	170.0	170.0	169.0
200	...	...	...	...	...	...	...	...	...	...	190.0	190.0	189.0
220	...	...	...	...	...	...	...	...	...	...	...	...	209.0
240	...	...	...	...	...	...	...	...	...	...	...	...	229.0
260	...	...	...	...	...	...	...	...	...	...	...	...	...
280	...	...	...	...	...	...	...	...	...	...	...	...	...
300	...	...	...	...	...	...	...	...	...	...	...	...	...

GENERAL NOTES:
(a) See para. 2.6.1.
(b) Dimensions are in millimeters.

Copyright ASME International
Provided by IHS under license with ASME
No reproduction or networking permitted without license from IHS
Not for Resale

TABLE 2 NOMINAL HEAD TO HOLE CENTER, L_h

Nominal Length, *L*	Nominal Diameter, *D*												
	27	30	33	36	40	45	50	55	60	70	80	90	100
6	...	...	...	...	...	...	...	...	...	...	...	...	...
8	...	...	...	...	...	...	...	...	...	...	...	...	...
10	...	...	...	...	...	...	...	...	...	...	...	...	...
12	...	...	...	...	...	...	...	...	...	...	...	...	...
14	...	...	...	...	...	...	...	...	...	...	...	...	...
16	...	...	...	...	...	...	...	...	...	...	...	...	...
18	...	...	...	...	...	...	...	...	...	...	...	...	...
20	...	...	...	...	...	...	...	...	...	...	...	...	...
22	...	...	...	...	...	...	...	...	...	...	...	...	...
24	...	...	...	...	...	...	...	...	...	...	...	...	...
26	...	...	...	...	...	...	...	...	...	...	...	...	...
28	...	...	...	...	...	...	...	...	...	...	...	...	...
30	...	...	...	...	...	...	...	...	...	...	...	...	...
32	...	...	...	...	...	...	...	...	...	...	...	...	...
35	...	...	...	...	...	...	...	...	...	...	...	...	...
40	...	...	...	...	...	...	...	...	...	...	...	...	...
45	...	...	...	...	...	...	...	...	...	...	...	...	...
50	...	...	...	...	...	...	...	...	...	...	...	...	...
55	44.5	...	...	...	...	...	...	...	...	...	...	...	...
60	49.5	49.0	...	...	...	...	...	...	...	...	...	...	...
65	54.5	53.5	53.5	...	...	...	...	...	...	...	...	...	...
70	59.5	58.5	58.5	59.0	...	...	...	...	...	...	...	...	...
75	64.5	63.5	63.5	64.0	...	...	...	...	...	...	...	...	...
80	69.5	68.5	68.5	69.0	69.0	...	...	...	...	...	...	...	...
85	74.5	73.5	73.5	74.0	74.0	...	...	...	...	...	...	...	...
90	79.5	78.5	78.5	79.0	79.0	77.5	...	...	...	...	...	...	...
95	84.5	83.5	83.5	83.5	83.5	82.5	...	...	...	...	...	...	...
100	89.5	88.5	88.5	88.5	88.5	87.5	87.0	...	...	...	...	...	...
120	110.0	109.0	109.0	109.0	109.0	108.0	107.0	105.0	105.0	...	...	...	...
140	129.0	128.0	128.0	129.0	129.0	127.0	127.0	125.0	125.0	123.0	...	...	...
160	149.0	148.0	148.0	149.0	149.0	147.0	147.0	145.0	145.0	143.0	143.0	...	...
180	169.0	168.0	168.0	169.0	169.0	167.0	167.0	165.0	165.0	163.0	163.0	164.0	...
200	189.0	188.0	188.0	188.0	188.0	188.0	187.0	185.0	185.0	183.0	183.0	183.0	183.0
220	209.0	208.0	208.0	208.0	208.0	208.0	207.0	205.0	205.0	203.0	203.0	203.0	203.0
240	229.0	228.0	228.0	228.0	228.0	228.0	227.0	225.0	225.0	223.0	223.0	223.0	223.0
260	249.0	248.0	248.0	248.0	248.0	248.0	247.0	245.0	245.0	243.0	243.0	243.0	243.0
280	...	268.0	268.0	268.0	268.0	267.0	267.0	265.0	265.0	263.0	263.0	263.0	263.0
300	...	288.0	288.0	288.0	288.0	267.0	267.0	285.0	285.0	283.0	283.0	283.0	283.0

Copyright ASME International
Provided by IHS under license with ASME
No reproduction or networking permitted without license from IHS
Not for Resale

TABLE 3 LENGTH TOLERANCE

Nominal Length, *L*		
Over	Through	Length Tolerance
...	10	±0.25
10	50	±0.50
50	...	±0.75

GENERAL NOTE: Dimensions are in millimeters.

TABLE 4 LENGTH FROM HEAD TO HOLE CENTER

Nominal Length From Head to Hole Center, L_h		Head to Hole Center Tolerance Plus (Nothing Minus)
Over	Through	
...	3	+0.25
3	6	+0.3
6	10	+0.36
10	18	+0.43
18	30	+0.52
30	50	+0.62
50	80	+0.74
80	120	+0.87
120	180	+1
180	250	+1.15
250	315	+1.3
315	400	+1.4
400	500	+1.55

GENERAL NOTE: Dimensions are in millimeters.

TABLE 5 HOLE TO SHANK POSITION TOLERANCE

Nominal Shank Diameter, *D*		Hole to Shank Position Tolerance at MMC, Max. Width
Over	Through	
...	3	0.28
3	6	0.36
6	10	0.44
10	18	0.54
18	30	0.66
30	50	0.78
50	80	0.92
80	100	1.08

GENERAL NOTE: Dimensions are in millimeters.

Copyright ASME International
Provided by IHS under license with ASME
No reproduction or networking permitted without license from IHS Not for Resale

NONMANDATORY APPENDIX A
CALCULATIONS FOR HOLE LOCATION

This Appendix provides information for calculation of hole locations for hole diameter/pin diameter combinations other than those shown in Table 1. The objective of these calculations is to avoid overlap of the hole chamfer and the pin end chamfer.

The nominal length, L_h, from hole center to hole center should satisfy both of the following formulas:

$$L_h \le L - (C + X + 0.5\,D_1) - \{0.5D - 0.5\,[D^2 - (D_1 + 2X)^2]^{0.5}\} - T_3 - T_4$$

and

$$L_h \le L - L_e$$

where

{ } = calculation of hole chamfer length, above hole chamfer width, X, with 90 deg countersink
C = point chamfer length. See Table A1.
D = nominal pin (shank) diameter. See para. 2.1 and Table 1.
D_1 = nominal hole diameter. See para. 2.5 and Table 1.
L = nominal pin length. See para. 2.3 and Table 2.
L_e = minimum length from hole to end per ISO 2341. See Table A1.
L_h = nominal length from head to hole center rounded to one decimal. See Table 2.
T_3 = minus tolerance on pin length, L. See Table 3.
T_4 = plus tolerance on length from head to hole center, L_h. See Table 4.
X = chamfer on side of hole. See Table A1.

The resulting values should then be rounded as follows:

$L_h < 10$	Round to the nearest 0.1 mm.
$10 \le L_h < 100$	Round to the nearest 0.5 mm.
$100 \le L_h$	Round to the nearest 1 mm.

EXAMPLE:

$D = 20$
$L = 100$
$D_1 = 6.3$
$C = 4.0$
$X = 1.0$
$T_3 = 0.75$
$T_4 = 0.87$

TABLE A1 DESIGN FEATURES FOR HOLE LOCATION

Pin Shank Diameter, D	Point Chamfer Length, C	Chamfer on Side of Hole, X [Note (1)]	End to Hole per ISO 2341, L_e
3	1.0	0.5	1.6
4	1.0	0.5	2.2
5	2.0	0.5	2.9
6	2.0	0.5	3.2
8	2.0	0.8	3.5
10	2.0	0.8	4.5
12	3.0	1.0	5.5
14 and 16	3.0	1.0	6.0
18	3.0	1.0	7.0
20 and 22	4.0	1.0	8.0
24 and 27	4.0	1.0	9.0
30 through 40	4.0	1.0	10.0
45	4.0	1.0	12.0
50	4.0	1.5	12.0
55 and 60	6.0	1.5	14.0
70 through 100	6.0	1.5	16.0

GENERAL NOTE: Dimensions are in millimeters.

NOTE:
(1) These values are based on an assumed 90 deg countersink.

$L_h \le L - (C + X + 0.5D_1) - \{0.5D - 0.5\,[D^2 - (D_1 + 2X)^2]^{0.5}\} - T_3 - T_4$

$100 - (4 + 1 + 3.15) - 0.5\,\{20 - [400 - 68.89]^{0.5}\} - 0.75 - 0.87$

$100 - 8.15 - 0.5\,\{20 - [18.196]\} - 1.62$

$100 - 8.15 - 0.902 - 1.62$

89.328

L_h rounded $\le$ 89.5

and

$L_h \le L - L_e$

100 − 8

92

Therefore, the specified hole spacing, L_h, should not be greater than 89.5 mm.

Copyright ASME International
Provided by IHS under license with ASME
No reproduction or networking permitted without license from IHS
Not for Resale

Copyright ASME International
Provided by IHS under license with ASME
No reproduction or networking permitted without license from IHS

Not for Resale

STD.ASME B18.8.200M-ENGL 2000 ■ 0759670 0618606 500 ■

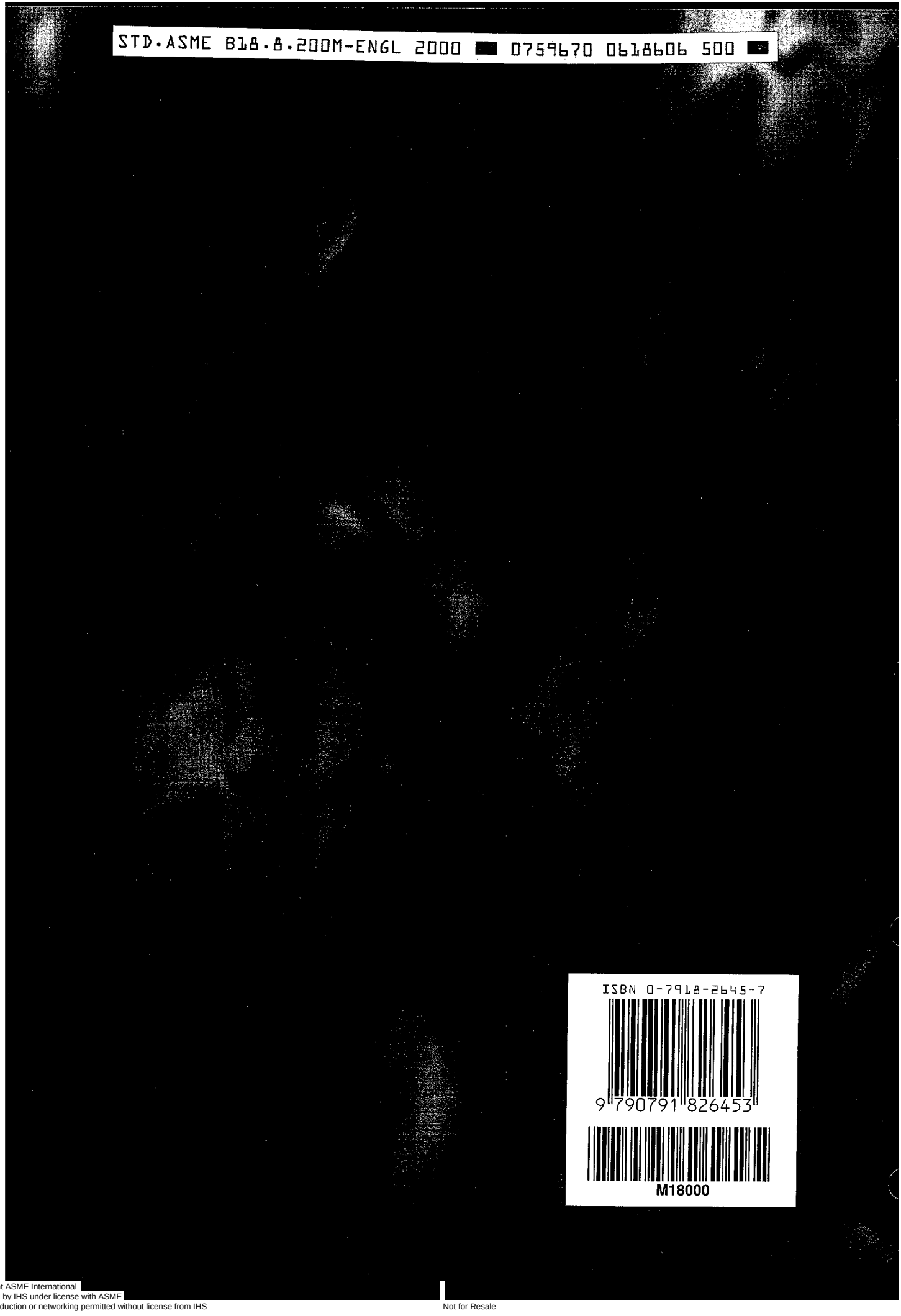

ISBN 0-7918-2645-7

Copyright ASME International
Provided by IHS under license with ASME
No reproduction or networking permitted without license from IHS
Not for Resale