ASME B18.8.2-2000
(Revision of ANSI/ASME B18.8.2-1995)

TAPER PINS, DOWEL PINS, STRAIGHT PINS, GROOVED PINS, AND SPRING PINS (INCH SERIES)

AN AMERICAN NATIONAL STANDARD

The American Society of Mechanical Engineers

Copyright ASME International
Provided by IHS under license with ASME
No reproduction or networking permitted without license from IHS

Not for Resale

The American Society of Mechanical Engineers

AN AMERICAN NATIONAL STANDARD

TAPER PINS, DOWEL PINS, STRAIGHT PINS, GROOVED PINS, AND SPRING PINS (INCH SERIES)

ASME B18.8.2-2000

(Revision of ANSI/ASME B18.8.2-1995)

Copyright ASME International
Provided by IHS under license with ASME
No reproduction or networking permitted without license from IHS

Not for Resale

Date of Issuance: October 31, 2001

The 2001 edition of this Standard is being revised with an automatic addenda subscription service. The use of an addenda allows revisions made in response to public review comments or committee actions to be published as necessary. The next edition of this Standard is scheduled for publication in 2006.

ASME will issue written replies to inquiries concerning interpretation of technical aspects of this Standard.

ASME is the registered trademark of The American Society of Mechanical Engineers.

This code or standard was developed under procedures accredited as meeting the criteria for American National Standards. The Standards Committee that approved the code or standard was balanced to assure that individuals from competent and concerned interests have had an opportunity to participate. The proposed code or standard was made available for public review and comment that provides an opportunity for additional public input from industry, academia, regulatory agencies, and the public-at-large.

ASME does not "approve," "rate," or "endorse" any item, construction, proprietary device, or activity.

ASME does not take any position with respect to the validity of any patent rights asserted in connection with any items mentioned in this document, and does not undertake to insure anyone utilizing a standard against liability for infringement of any applicable Letters Patent, nor assumes any such liability. Users of a code or standard are expressly advised that determination of the validity of any such patent rights, and the risk of infringement of such rights, is entirely their own responsibility.

Participation by federal agency representative(s) or person(s) affiliated with industry is not to be interpreted as government or industry endorsement of this code or standard.

ASME accepts responsibility for only those interpretations issued in accordance with governing ASME procedures and policies which precludes the issuance of interpretations by individuals.

No part of this document may be reproduced in any form,
in an electronic retrieval system or otherwise,
without the prior written permission of the publisher.

The American Society of Mechanical Engineers
Three Park Avenue, New York, NY 10016-5990

Copyright © 2001 by
THE AMERICAN SOCIETY OF MECHANICAL ENGINEERS
All Rights Reserved
Printed in U.S.A.

Copyright ASME International
Provided by IHS under license with ASME
No reproduction or networking permitted without license from IHS
Not for Resale

FOREWORD

The need for a standard covering machine pins was recognized by industry as far back as March, 1926, when the Sectional Committee on the Standardization of Machine Pins was organized under the procedure of the American Standards Association (later the United States of America Standards Institute and as of October 6, 1969, the American National Standards Institute, Inc.), with the Society of Automotive Engineers and the American Society of Mechanical Engineers as joint sponsors.

For the next year or two an effort was made via correspondence to develop a basis on which a standard for straight, taper, split, and dowel pins might be established. This correspondence exposed a distinct difference of opinion on the part of the manufacturers and users of taper machine pins, which seemed to discourage the members of the committee from attempting standardization on any of the types of pins within its scope. The sponsor organization made frequent efforts to revive this project through letters and the distribution of technical literature on this general subject, without avail.

In December, 1941, during its periodic review of Society-sponsored standards, the ASME Standardization Committee decided that reviving the project was unlikely and voted (subject to acceptance by the sponsors) to suggest to the ASA the transfer of this project to Sectional Committee B5 on the Standardization of Small Tools and Machine Tool Elements. The sponsors agreed and on July 7, 1942, the ASA sanctioned this action and Sectional Committee B43 was discharged and the project was officially transferred to Sectional Committee B5.

At its meeting in December, 1942, Sectional Committee B5 voted to enlarge its scope to include machine pins. Technical Committee No. 23 was subsequently established and charged with the responsibility for technical content of standards covering machine pins. This group held its first meeting on November 30, 1943, at which time a subgroup on Correlation and Recommendations was appointed and it was voted to include clevis pins in addition to the other pin types already under consideration. Several drafts were prepared by the subgroup, distributed for critical comment to users, manufacturers, and general interests and revised and resubmitted for comments. This action finally resulted in acceptance by Technical Committee 23 of a draft dated November, 1945. Proofs of the draft, with a date of October, 1946 were distributed to the members of Sectional Committee B5 for letter ballot approval. After the approval of the Sectional Committee, the proposal was next approved by the sponsor bodies, and presented to the American Standards Association for approval as an American Standard. This designation was granted on July 7, 1947.

Following the issuance of the standard it became apparent that the table on cotter pins needed revision. Accordingly in 1953 a proposed revision was submitted to the Sectional Committee. After attaining Sectional Committee and sponsor approval this revision was approved by the American Standards Association on July 9, 1954 as ASA B5.20-1954.

In 1956 and 1957, in response to requests from industry, extensive changes were incorporated into a proposed revision. These included revisions to chamfer values and tolerances on straight pins and unhardened ground dowel pins; revisions to under-head-to-hole, pin end dimensions, and hole size tolerances on clevis pins; addition of chisel point to cotter pin end-styles; and the incorporation of coverage on grooved pins. Following Sectional Committee and sponsor approvals, this revision was adopted by the American Standards Association on March 25, 1958, as ASA B5.20-1958.

Copyright ASME International
Provided by IHS under license with ASME
No reproduction or networking permitted without license from IHS
Not for Resale

In late 1961, Sectional Committee B5 suggested that Sectional Committee B18 on the standardization of bolts, nuts, rivets, screws, and similar fasteners assume jurisdiction over standards for pins. Recognizing that the bulk of the products covered in the ASA B5.20 standards were fastener rather than machine oriented, this recommendation was supported by the B18 Committee and officially endorsed by the sponsor organizations. Consequently this Committee, at the September 14, 1962 meeting, decreed that Subcomittee 23* should be formed to review and update the pin standard.

At the initial meeting, held on June 3, 1964, Subcommittee 23* decided to add standards for spring pins and to establish seven subgroups, each of which would have technical responsibility for specific pin products, and to publish respective products under separate cover as projects were completed.

Over several years, work by Subgroups 2, 3, 4, 5, and 6 culminated in a proposal for revising the standards covering taper, dowel, straight, and grooved pins and including coverage for spring pins (which was approved through letter ballot by Subcommittee 8 on February 24, 1977). After acceptance by American National Standards Committee B18 and the sponsor organizations, this document was submitted to the American National Standards Institute for approval as an American National Standard. Approval was granted on April 5, 1978 and the standard was published under the designation ANSI B18.8.2, superseding in part the coverage provided in ASA B5.20-1958.

The B18.8.2 standard has been reaffirmed once without change in 1989 since the 1978 edition was published. The 1995 edition of B18.8.2 contains significant changes to the 1989 edition of B18.8.2 and was developed by the American Society of Mechanical Engineers B18 Committee on Fasteners.

This Standard was approved by the American National Standards Institute on June 22, 2000.

---

* As of April 1, 1966 Subcommittee 23 was redesignated Subcommittee 8.

Copyright ASME International
Provided by IHS under license with ASME
No reproduction or networking permitted without license from IHS
Not for Resale

ASME B18 STANDARDS COMMITTEE
Standardization of Bolts, Nuts, Rivets, Screws, Washers, and Similar Fasteners

(The following is the roster of the Committee at the time of approval of this Standard.)

OFFICERS

D. A. Clever, *Chair*
R. D. Strong, *Vice Chair*
S. W. Vass, *Vice Chair*
R. L. Crane, *Secretary*

COMMITTEE PERSONNEL

D. R. Akers, *Alternate*, Industrial Fasteners Institute
J. Altman, Rotor Clip Co.
J. B. Belford, Lawson Products, Inc.
J. A. Buda, SPS Technologies, Inc.
R. M. Byrne, Trade Association Management, Inc.
D. A. Clever, Deere & Co.
A. P. Cockman, Ford Motor Co.
T. Collier, Cam-Tech Industries, Inc.
R. L. Crane, The American Society of Mechanical Engineers
A. C. DiCola, Wrought Washer Manufacturing, Inc.
D. L. Drobnich, *Alternate*, Ford Motor Co.
B. A. Dusina, Federal Screw Works
D. S. George, Ford Motor Co.
J. Greenslade, Greenslade and Co.
B. Hasiuk, Defense Industrial Supply Center
A. Herskovitz, Consultant
J. Hubbard, Rockford Fastener, Inc.
D. F. Kattler, SPS Technologies
F. W. Kern, Society of Automotive Engineers
J. F. Koehl, Spirol International Corp.
W. H. Kopke, ITW Shakeproof Industrial Products
J. G. Langenstein, Consultant
M. Levinson, ITW Shakeproof Industrial Products
D. Liesche, Defense Industrial Supply Center
L. L. Lord, Caterpillar, Inc.
D. B. Mantas, GE-EMPIS
A. D. McCrindle, Genfast Manufacturing Co.
K. E. McCullough, Consultant
R. B. Meade, Camcar Textron
R. F. Novotny, Whitesell Corp.
M. D. Prasad, General Motors Corp.
S. Savoji, ITW Medalist
W. Schevey, BGM Fastener Co., Inc.
J. H. Slass, *Alternate*, Rotor Clip Co.
R. D. Strong, General Motors Corp.
J. F. Sullivan, National Fastener Distributors Association
R. L. Tennis, *Alternate*, Caterpillar, Inc.
S. W. Vass, Lake Erie Screw Corp./IFI

--`,,`-`-`,,`,,`,`,,`---

Copyright ASME International
Provided by IHS under license with ASME
No reproduction or networking permitted without license from IHS
Not for Resale

C. B. Wackrow, MNP Corp.
R. G. Weber, Fairfield University
W. K. Wilcox, Consultant
C. J. Wilson, Industrial Fasteners Institute
R. B. Wright, Wright Tool Co.
J. G. Zeratsky, National Rivet & Manufacturing Co.

SUBCOMMITTEE 8 — MACHINE PINS

J. Beshar, *Chair*, Groov-Pin Corp.
B. D. Hamilton, *Vice Chair*, Spirol International
R. L. Crane, *Secretary*, American Society of Mechanical Engineers
A. E. Barry, Standard Lock Washer Co.
D. A. Clever, Deere & Co.
L. E. Hampel, Allied-Locke Industry, Inc.
A. Herskovitz, Consultant
D. F. Kattler, SPS Technologies
R. W. Kerr, Kerr Lakeside, Inc.
H. H. Koehl, Spirol International Corp.
J. F. Koehl, Spirol International Corp.
W. H. Kopke, ITW Shakeproof Industrial Products
J. G. Langenstein, Consultant
M. Levinson, ITW Shakeproof Industrial Products
D. B. Mantas, GE-EMPIS
N. M. Sakatos, Vogelsang Corp.
T. Schaumburg, Driv-Lok
L. D. Sieper, Precise Products
C. J. Wilson, Industrial Fasteners Institute

Copyright ASME International
Provided by IHS under license with ASME
No reproduction or networking permitted without license from IHS
Not for Resale

CORRESPONDENCE WITH B18 COMMITTEE

General. ASME Standards are developed and maintained with the intent to represent the consensus of concerned interests. As such, users of this Standard may interact with the Committee by requesting interpretations, proposing revisions, and attending Committee meetings. Correspondence should be addressed to:

Secretary, B18 Standards Committee
The American Society of Mechanical Engineers
Three Park Avenue
New York, NY 10016-5990

Proposing Revisions. Revisions are made periodically to the Standard to incorporate changes that appear necessary or desirable, as demonstrated by the experience gained from the application of the Standard. Approved revisions will be published periodically.

The Committee welcomes proposals for revisions to this Standard. Such proposals should be as specific as possible, citing the paragraph number(s), the proposed wording, and a detailed description of the reasons for the proposal, including any pertinent documentation.

Interpretations. Upon request, the B18 Committee will render an interpretation of any requirement of the Standard. Interpretations can only be rendered in response to a written request sent to the Secretary of the B18 Standards Committee.

The request for interpretation should be clear and unambiguous. It is further recommended that the inquirer submit his/her request in the following format:

Subject: Cite the applicable paragraph number(s) and the topic of the inquiry.

Edition: Cite the applicable edition of the Standard for which the interpretation is being requested.

Question: Phrase the question as a request for an interpretation of a specific requirement suitable for general understanding and use, not as a request for an approval of a proprietary design or situation. The inquirer may also include any plans or drawings, which are necessary to explain the question; however, they should not contain proprietary names or information.

Requests that are not in this format will be rewritten in this format by the Committee prior to being answered, which may inadvertently change the intent of the original request.

ASME procedures provide for reconsideration of any interpretation when or if additional information that might affect an interpretation is available. Further, persons aggrieved by an interpretation may appeal to the cognizant ASME Committee or Subcommittee. ASME does not “approve,” “certify,” “rate,” or “endorse” any item, construction, proprietary device, or activity.

Attending Committee Meetings. The B18 Standards Committee regularly holds meetings, which are open to the public. Persons wishing to attend any meeting should contact the Secretary of the B18 Standards Committee.

Copyright ASME International
Provided by IHS under license with ASME
No reproduction or networking permitted without license from IHS
Not for Resale

CONTENTS

Foreword iii
Committee Roster v
Correspondence with B18 Committee vii

1 Introductory Notes 1

2 General Data for Taper Pins 3

3 General Data for Hardened Ground Machine Dowel Pins 4

4 General Data for Hardened Ground Production Dowel Pins 9

5 General Data for Unhardened Ground Dowel Pins 10

6 General Data for Straight Pins 15

7 General Data for Grooved Pins, Grooved Drive Studs, and Grooved T-Head Cotter Pins 16

8 General Data for Spring Pins 26

Tables

1 Dimensions of Taper Pins 2
1A Standard Sizes and Lengths of Taper Pins 5
2 Dimensions of Hardened Ground Machine Dowel Pins 6
2A Preferred Sizes and Lengths of Hardened Ground Machine Dowel Pins 7
3 Dimensions of Hardened Ground Production Dowel Pins 11
3A Preferred Sizes and Lengths of Hardened Ground Production Dowel Pins 12
4 Dimensions of Unhardened Ground Dowel Pins 13
4A Preferred Sizes and Lengths of Unhardened Ground Dowel Pins 14
5 Dimensions of Chamfered and Square End Straight Pins 17
6 Dimensions of Grooved Pins 20
6A Expanded Diameters for Grooved Pins Made From Low Carbon or Alloy Steel 21
6B Expanded Diameters for Grooved Pins Made From Corrosion Resistant Steel and Monel 22
6C Standard Sizes and Lengths of Grooved Pins 23
7 Dimensions of Round-Head Grooved Drive Studs 24
7A Pilot Length Dimensions for Round-Head Grooved Drive Studs 24
8 Dimensions of Grooved T-Head Cotter Pins 25
8A Groove Length Dimensions for Grooved T-Head Cotter Pins 25
9 Practical Sizes and Lengths of Coiled- and Slotted-Type Spring Pins 27
10 Dimensions of Slotted-Type Spring Pins 28
11 Dimensions of Coiled-Type Spring Pins 29

Figure

1 Point Concentricity 7

Copyright ASME International
Provided by IHS under license with ASME
No reproduction or networking permitted without license from IHS
Not for Resale

Nonmandatory Appendices

A Recommended Hole Specifications for Taper Pins 33
B Double Shear Testing of Pins 36
C Type B, C, and D Grooved Pin Dimensions 37
D Conversion Table for SAE and UNS Material Specifications 38

Copyright ASME International
Provided by IHS under license with ASME
No reproduction or networking permitted without license from IHS
Not for Resale

Copyright ASME International
Provided by IHS under license with ASME
No reproduction or networking permitted without license from IHS
Not for Resale

1 INTRODUCTORY NOTES

1.1 Scope

1.1.1 This Standard is intended to cover the complete dimensional and general data for taper pins, dowel pins, straight pins, grooved pins, and spring pins recognized as "American National Standard," which are widely used in general industrial applications. Also included are appendices providing supplementary information for the drilling of holes for taper pins and the testing of pins in double shear.

1.1.2 The inclusion of dimensional data in this Standard is not intended to imply that all of the products described are stock production sizes. Consumers are requested to consult with manufacturers concerning availability of product.

1.2 Types of Pins

The types of pins covered by this Standard are described in subparagraphs 1.2.1 through 1.2.5.

1.2.1 Taper Pins. Taper pins shall have a uniform taper over the pin length with both ends crowned. Most sizes are supplied in both commercial and precision classes, the latter having generally tighter tolerances and being more closely controlled in manufacture. Dimensions for both classes are given in Table 1.

1.2.2 Dowel Pins. The following three varieties of dowel pins, each serving specific needs, are covered.

1.2.2.1 Hardened Ground Machine Dowel Pins. This variety of hardened dowel pins shall have ground cylindrical sides with one end pointed slightly to enter mating drive-fit holes and the other end rounded or crowned for driving purposes. They are available in standard and oversize diameter series to satisfy initial and replacement requirements, respectively. These dowel pins are intended for applications where precise locating of mating parts is essential, such as, for doweling hardened tool and machine components or to serve as stops, guides, and load bearing pins, etc., where strength, shock, or wear factors necessitate a hardened pin. Dimensions for both series are given in Table 2.

1.2.2.2 Hardened Ground Production Dowel Pins. This variety of hardened dowel pin shall have ground cylindrical sides with both ends rounded sufficiently to enable the pin to be pressed into drive-fit holes. These dowel pins are used extensively for applications such as those cited for hardened ground machine dowel pins, in volume production situations, entailing automated installation equipment. Dimensions are given in Table 3.

1.2.2.3 Unhardened Ground Dowel Pins. This variety of dowel pin shall have ground cylindrical sides with both ends chamfered. These pins are intended for applications similar to those cited for the other varieties of dowel pins where strength, shock, and wear factors do not warrant use of hardened pins, such as, prealigning component parts to be assembled with threaded fasteners, stops, guides, or pivots subject to little wear, and as low-shear load-bearing pins. Dimensions are given in Table 4.

1.2.3 Straight Pins. Straight pins shall have unground, straight cylindrical sides with both ends definitely chamfered on chamfered straight pins and with both ends having broken corners or being slightly chamfered on square end straight pins. Dimensions are given in Table 5.

1.2.4 Grooved Pins. Grooved pins shall have unground, straight cylindrical sides with three or more swaged or extruded grooves equally spaced around the periphery to displace material beyond the basic pin diameter. Both ends of pin are normally crowned or chamfered. Grooved pins are available in several types to satisfy various design considerations and also in headed versions, grooved drive studs, and grooved T-head cotter pins. Upon installation, the material displaced by the grooves is forced back into the grooves and reacts against the sides of the hole to promote retention of the pin or stud. Dimensions of the various types of groove pins are given in Tables 6 through 6B, grooved drive studs are shown in Table 7, and grooved T-head cotter pins are covered in Tables 8 and 8A.

1.2.5 Spring Pins. Spring pins shall have straight cylindrical sides with both ends chamfered. They are available in two basic types, reflecting slotted construc-

Copyright ASME International
Provided by IHS under license with ASME
No reproduction or networking permitted without license from IHS
Not for Resale

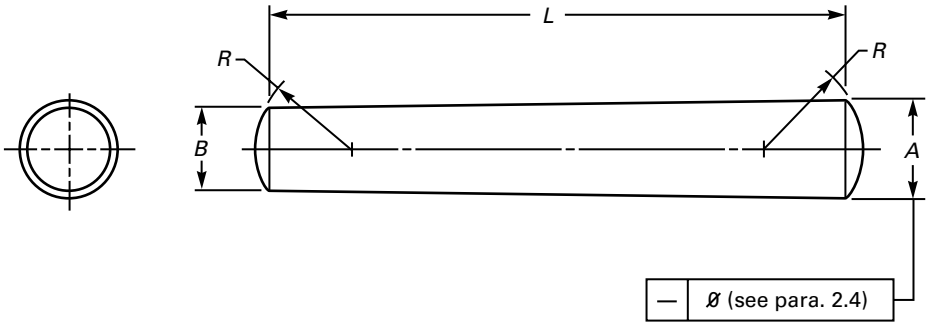

TABLE 1 DIMENSIONS OF TAPER PINS

Pin Size Number and Basic Pin Diameter [Note (1)]	A				R	
	Major Diameter (Large End)					
	Commercial Class		Precision Class [Note (2)]		End Crown Radius	
	Max.	Min.	Max.	Min.	Max.	Min.
7/0 0.0625	0.0638	0.0618	0.0635	0.0625	0.072	0.052
6/0 0.0780	0.0793	0.0773	0.0790	0.0780	0.088	0.068
5/0 0.0940	0.0953	0.0933	0.0950	0.0940	0.104	0.084
4/0 0.1090	0.1103	0.1083	0.1100	0.1090	0.119	0.099
3/0 0.1250	0.1263	0.1243	0.1260	0.1250	0.135	0.115
2/0 0.1410	0.1423	0.1403	0.1420	0.1410	0.151	0.131
0 0.1560	0.1573	0.1553	0.1570	0.1560	0.166	0.146
1 0.1720	0.1733	0.1713	0.1730	0.1720	0.182	0.162
2 0.1930	0.1943	0.1923	0.1940	0.1930	0.203	0.183
3 0.2190	0.2203	0.2183	0.2200	0.2190	0.229	0.209
4 0.2500	0.2513	0.2493	0.2510	0.2500	0.260	0.240
5 0.2890	0.2903	0.2883	0.2900	0.2890	0.299	0.279
6 0.3410	0.3423	0.3403	0.3420	0.3410	0.351	0.331
7 0.4090	0.4103	0.4083	0.4100	0.4090	0.419	0.399
8 0.4920	0.4933	0.4913	0.4930	0.4920	0.502	0.482
9 0.5910	0.5923	0.5903	0.5920	0.5910	0.601	0.581
10 0.7060	0.7073	0.7053	0.7070	0.7060	0.716	0.696
11 0.8600	0.8613	0.8593	[Note (2)]	[Note (2)]	0.870	0.850
12 1.0320	1.0333	1.0313	[Note (2)]	[Note (2)]	1.042	1.022
13 1.2410	1.2423	1.2403	[Note (2)]	[Note (2)]	1.251	1.231
14 1.5230	1.5243	1.5223	[Note (2)]	[Note (2)]	1.533	1.513

GENERAL NOTES:
(a) For additional requirements refer to Section 2.
(b) Reference ASME Y14.5M.

CHARACTERISTICS	SYMBOL
Straightness	–
Diameter	ø

NOTES:
(1) Where specifying nominal pin size in decimals, zeros preceding decimal and in the fourth decimal place shall be omitted.
(2) Precision Class pins are not produced in size numbers 11 through 14.

Copyright ASME International
Provided by IHS under license with ASME
No reproduction or networking permitted without license from IHS
Not for Resale

tion and coiled construction, and the latter in standard duty, heavy duty, and light duty series to suit various design requirements. Slotted-type spring pins having a single wall and coiled-type spring pins having multiple walls are formed or wrapped from strip stock to a diameter larger than basic and hardened in accordance with para. 8.6. Upon installation the pin diameters contract and the spring reaction against the sides of the hole tends to retain the pin. Dimensions of slotted-type spring pins and coiled-type spring pins are given in Tables 10 and 11, respectively.

1.3 Dimensions

All dimensions in this Standard are given in inches, unless otherwise stated.

1.4 Options

Options, where specified, shall be at the discretion of the manufacturer, unless otherwise agreed upon by the manufacturer and purchaser.

1.5 Terminology

For definition of terms relating to fasteners or component features thereof used in this Standard, refer to ASME B18.12.

1.6 Related Standards

It should be noted that standards for clevis pins and cotter pins, inch series are published in ASME B18.8.1.

1.7 Referenced Standards and Specifications

Unless otherwise specified all standards and specifications referred to in this Standard shall be the most recently issued.

ASME B18.8.1, Clevis Pins and Cotter Pins (Inch Series)
ASME B18.12, Glossary of Terms for Mechanical Fasteners
ASME B18.18.1M, Inspection and Quality Assurance for General Purpose Fasteners
ASME B18.24.2, Part Identifying Number (PIN) Code System Standard for B18 Nonthreaded Products
ASME B46.1, Surface Texture
ASME Y14.5M, Dimensioning and Tolerancing

Publisher: American Society of Mechanical Engineers, Three Park Avenue, New York, NY 10016-5990

Copies of referenced ASTM Standards may be obtained from ASTM, 100 Barr Harbor Drive, West Conshohocken, Pennsylvania 19428.

Copies of referenced SAE or UNS standards[1] and specifications may be obtained from the Society of Automotive Engineers, Inc., 400 Commonwealth Drive, Warrendale, Pennsylvania 15096.

2 GENERAL DATA FOR TAPER PINS

2.1 Diameters

2.1.1 Major Diameter. The major diameter, A, of both commercial and precision classes of pins, specified in Table 1, is the diameter at the large end and is the basis for the pin size.

2.1.2 Diameter at Small End. The diameter at the small end of pins, B, is a function of the length and should be specified as a reference dimension for determining drilled hole size. (See Appendix A.) It shall be computed by multiplying the nominal length of pin by the factor 0.02083 and subtracting the result from the basic pin diameter.

2.2 Ends

Both ends of commercial and precision class pins shall be crowned with a spherical radius as specified in Table 1.

2.3 Taper

2.3.1 Commercial Class. The taper on diameter of commercial class taper pins shall be 0.250 ± 0.006 in. per ft. (12.00 in.) of length.

2.3.2 Precision Class. The taper on diameter of precision class taper pins shall be 0.250 ± 0.004 in. per ft. (12.00 in.) of length.

2.4 Concavity and Convexity

Pins shall be straight within the following limits. Refer to the figure in Table 1.

[1] See Table in Appendix D for equivalent SAE and UNS material specifications.

Copyright ASME International
Provided by IHS under license with ASME
No reproduction or networking permitted without license from IHS
Not for Resale

Pin Class	Commercial	Precision
Nominal Pin Length	Concavity and Convexity Limits	
Up to 2 in., incl.	0.001	0.0005
Over 2 to 4 in., incl.	0.002	0.001
Over 4 in.	0.004	0.002

2.5 Length

2.5.1 Measurement. The length of taper pins shall be measured, parallel to the axis of pin, between the points of intersection of the crown with the diameter at ends of pin.

2.5.2 Tolerance on Length. The tolerance on length of taper pins shall be ±0.010 in. for both commercial and precision classes.

2.5.3 Standard Lengths. The standard sizes and lengths in which taper pins are normally available are depicted in Table 1A. Precision class pins are not produced in size numbers 11 through 14. Where other size-length combinations may be required, manufacturers should be consulted.

2.6 Surface Roughness

The surface roughness over the length of pins shall not exceed 63 microinch (μin.) (arithmetical average) on commercial class pins nor 32 microinch (μin.) (arithmetical average) on precision class pins. Refer to ASME B46.1. For pins having additive finishes, these limits shall apply prior to plating or coating.

2.7 Materials

Unless otherwise specified, taper pins shall be made from SAE 1211 steel, or cold drawn SAE 1212 or 1213 steel, or equivalents, and no mechanical property requirements shall apply.

2.8 Finishes

Unless otherwise specified, taper pins shall be furnished with a natural (as processed) finish, unplated or uncoated. Other finishes, where required, shall be subject to agreement between the manufacturer and purchaser.

2.9 Workmanship

Taper pins shall be free from burrs, seams, scratches, or nicks and any other defects affecting their serviceability.

2.10 Hole Sizes

Under most circumstances, holes for taper pins require taper reaming. Recommended practices covering the preparation of holes for installation of taper pins are contained in Appendix A.

2.11 Designation

2.11.1 Taper pins shall be designated by the following data, in the sequence shown. Product name (noun first), including class; size number (or decimal equivalent); length (fraction or three-place decimal equivalent); material, and protective finish, if required. See the following examples:

Pin, Taper (Commercial Class) No. 0 × 3/4, Steel

Pin, Taper (Precision Class) .219 × 1.750, Steel, Zinc Plated

2.11.2 For a recommended part identifying numbering system (PIN), see ASME B18.24.3.

3 GENERAL DATA FOR HARDENED GROUND MACHINE DOWEL PINS

3.1 Diameters

3.1.1 Size. Hardened ground machine dowel pins are furnished in two diameter series: Standard Series having basic diameters 0.0002 in. over the nominal diameter, intended for initial installations; and Oversize Series having basic diameters 0.001 in. over the nominal diameter, intended for replacement use. For both series the diameter shall be ground, or ground and lapped, to within ±0.0001 in. of the respective basic diameters, as specified in Table 2.

3.1.2 Roundness. The outer periphery of hardened ground machine dowel pins shall conform to true round about the longitudinal axis of pin within 0.0001 in., when measured with equipment that will detect a lobed surface.

Copyright ASME International
Provided by IHS under license with ASME
No reproduction or networking permitted without license from IHS

Not for Resale

TABLE 1A STANDARD SIZES AND LENGTHS OF TAPER PINS

Nominal Length	Pin Size Number																				
	7/0	6/0	5/0	4/0	3/0	2/0	0	1	2	3	4	5	6	7	8	9	10	11[1]	12[1]	13[1]	14[1]
1/4	x	x	x	x	x																
3/8	x	x	x	x	x																
1/2	x	x	x	x	x	x	x														
5/8	x	x	x	x	x	x	x														
3/4	x	x	x	x	x	x	x	x	x	x	x										
7/8	x	x	x	x	x	x	x	x	x	x	x										
1	x	x	x	x	x	x	x	x	x	x	x	x									
1 1/4		x	x	x	x	x	x	x	x	x	x	x	x	x	x	x					
1 1/2		x	x	x	x	x	x	x	x	x	x	x	x	x	x	x	x				
1 3/4				x	x	x	x	x	x	x	x	x	x	x	x	x	x				
2				x	x	x	x	x	x	x	x	x	x	x	x	x	x	x	x		
2 1/4						x	x	x	x	x	x	x	x	x	x	x	x	x	x		
2 1/2						x	x	x	x	x	x	x	x	x	x	x	x	x	x		
2 3/4						x	x	x	x	x	x	x	x	x	x	x	x	x	x		
3							x	x	x	x	x	x	x	x	x	x	x	x	x	x	x
3 1/4										x	x	x	x	x	x	x	x	x	x	x	x
3 1/2										x	x	x	x	x	x	x	x	x	x	x	x
3 3/4										x	x	x	x	x	x	x	x	x	x	x	x
4										x	x	x	x	x	x	x	x	x	x	x	x
4 1/4												x	x	x	x	x	x	x	x	x	x
4 1/2												x	x	x	x	x	x	x	x	x	x
4 3/4												x	x	x	x	x	x	x	x	x	x
5												x	x	x	x	x	x	x	x	x	x
5 1/4												x	x	x	x	x	x	x	x	x	x
5 1/2												x	x	x	x	x	x	x	x	x	x
5 3/4												x	x	x	x	x	x	x	x	x	x
6												x	x	x	x	x	x	x	x	x	x
6 1/4														x	x	x	x	x	x	x	x
6 1/2														x	x	x	x	x	x	x	x
6 3/4														x	x	x	x	x	x	x	x
7														x	x	x	x	x	x	x	x
7 1/4														x	x	x	x	x	x	x	x
7 1/2														x	x	x	x	x	x	x	x
7 3/4														x	x	x	x	x	x	x	x
8														x	x	x	x	x	x	x	x
8 1/4																			x	x	x
8 1/2																			x	x	x
8 3/4																			x	x	x
9																			x	x	x
9 1/4																				x	x
9 1/2																				x	x
9 3/4																				x	x
10																				x	x
10 1/4																				x	x
10 1/2																				x	x
10 3/4																				x	x
11																				x	x
11 1/4																					x
11 1/2																					x
11 3/4																					x
12																					x
12 1/4																					x
12 1/2																					x
13																					x

GENERAL NOTE: Standard reamers are available for pins shown above heavy lines.
NOTE:
(1) Precision class pins are not produced in size numbers 11 through 14.

Copyright ASME International
Provided by IHS under license with ASME
No reproduction or networking permitted without license from IHS Not for Resale

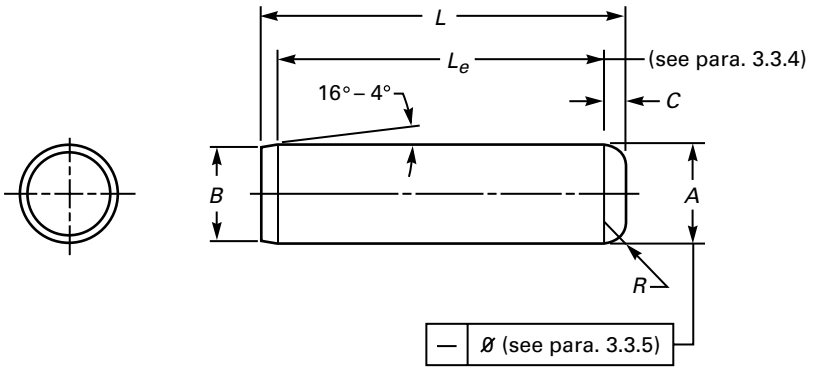

TABLE 2 DIMENSIONS OF HARDENED GROUND MACHINE DOWEL PINS

Nominal Size or Nominal Pin Diameter [Note (1)]		A						B		C	R
		Pin Diameter									
		Standard Series Pins			Oversize Series Pins			Point Diameter		Crown Height	Crown Radius
		Basic	Max.	Min.	Basic	Max.	Min.	Max.	Min.	Max.	Min.
1/16	0.0625	0.0627	0.0628	0.0626	0.0635	0.0636	0.0634	0.058	0.048	0.020	0.008
*5/64	0.0781	0.0783	0.0784	0.0782	0.0791	0.0792	0.0790	0.074	0.064	0.026	0.010
3/32	0.0938	0.0940	0.0941	0.0939	0.0948	0.0949	0.0947	0.089	0.079	0.031	0.012
1/8	0.1250	0.1252	0.1253	0.1251	0.1260	0.1261	0.1259	0.120	0.110	0.041	0.016
*5/32	0.1562	0.1564	0.1565	0.1563	0.1572	0.1573	0.1571	0.150	0.140	0.052	0.020
3/16	0.1875	0.1877	0.1878	0.1876	0.1885	0.1886	0.1884	0.180	0.170	0.062	0.023
1/4	0.2500	0.2502	0.2503	0.2501	0.2510	0.2511	0.2509	0.240	0.230	0.083	0.031
5/16	0.3125	0.3127	0.3128	0.3126	0.3135	0.3136	0.3134	0.302	0.290	0.104	0.039
3/8	0.3750	0.3752	0.3753	0.3751	0.3760	0.3761	0.3759	0.365	0.350	0.125	0.047
7/16	0.4375	0.4377	0.4378	0.4376	0.4385	0.4386	0.4384	0.424	0.409	0.146	0.055
1/2	0.5000	0.5002	0.5003	0.5001	0.5010	0.5011	0.5009	0.486	0.471	0.167	0.063
5/8	0.6250	0.6252	0.6253	0.6251	0.6260	0.6261	0.6259	0.611	0.595	0.208	0.078
3/4	0.7500	0.7502	0.7503	0.7501	0.7510	0.7511	0.7509	0.735	0.715	0.250	0.094
7/8	0.8750	0.8752	0.8753	0.8751	0.8760	0.8761	0.8759	0.860	0.840	0.293	0.109
1	1.0000	1.0002	1.0003	1.0001	1.0010	1.0011	1.0009	0.980	0.960	0.333	0.125

GENERAL NOTES:
(a) For additional requirements refer to Section 3.
(b) Reference ASME Y14.5M.

CHARACTERISTICS	SYMBOL
Straightness	–
Diameter	ø

NOTES:
(1) Where specifying nominal size as basic diameter, zeros preceding decimal and in the fourth decimal place shall be omitted.
* Nonpreferred sizes, not recommended for use in new designs.

3.2 Ends

3.2.1 End Contours. The ends of hardened ground machine dowel pins shall be reasonably flat and perpendicular to the axis of pin. One end of pin shall be pointed and the other end crowned to the dimensions specified in Table 2. On the pointed end, the edge formed by the surface of point and the end of pin may be slightly rounded or broken.

3.2.1.1 Point Concentricity. For pins having nominal lengths equal to four times the basic pin diameter or longer, the concentricity between the diameter of point and the pin diameter shall be such that

Copyright ASME International
Provided by IHS under license with ASME
No reproduction or networking permitted without license from IHS
Not for Resale

TABLE 2A PREFERRED SIZES AND LENGTHS OF HARDENED GROUND MACHINE DOWEL PINS

Nominal Length	Nominal Size												
	1/16	3/32	1/8	3/16	1/4	5/16	3/8	7/16	1/2	5/8	3/4	7/8	1
3/16	x												
1/4	x												
5/16	x	x											
3/8	x	x	x										
1/2	x	x	x	x	x	x	x						
5/8	x	x	x	x	x	x	x						
3/4	x	x	x	x	x	x	x		x				
7/8		x	x	x	x	x	x	x					
1		x	x	x	x	x	x	x	x				
1 1/4			x	x	x	x	x	x	x	x			
1 1/2			x	x	x	x	x	x	x	x	x		
1 3/4			x	x	x	x	x	x	x	x	x		
2			x	x	x	x	x	x	x	x	x	x	x
2 1/4					x	x	x	x	x	x	x		
2 1/2					x	x	x	x	x	x	x	x	x
3							x	x	x	x	x	x	x
3 1/2									x	x	x	x	x
4									x	x	x	x	x
4 1/2										x	x	x	x
5										x	x	x	x
5 1/2											x	x	
6											x	x	x

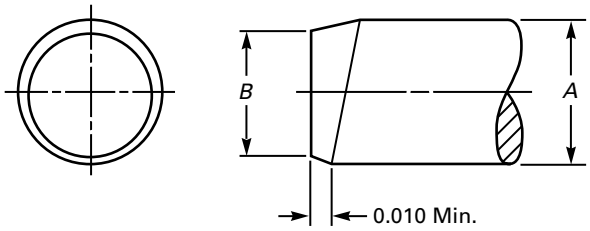

FIG. 1 POINT CONCENTRICITY

the minimum length of point on the pin is not less than 0.01 in. (see Fig. 1).

3.3 Length

3.3.1 Measurement. The length of hardened ground machine dowel pins shall be measured overall from end to end, parallel to the axis of pin.

3.3.2 Tolerance on Length. The tolerance on the length of hardened ground machine dowel pins shall be ±0.01 in.

3.3.3 Preferred Lengths. The preferred sizes and lengths in which hardened ground machine dowel pins are normally available are depicted in Table 2A. Other sizes and lengths are produced as required by the purchaser.

3.3.4 Effective Length. The effective length, L_e, is that portion of the pin length bounded by the length of point on one end and the radius of crown on the other. On dowel pins, when the effective length is less than 75% of the overall length of pin, it is necessary to deviate from the specified dimensions by reducing the crown radius and height, or increasing the point angle, or both, to maintain 75%.

Copyright ASME International
Provided by IHS under license with ASME
No reproduction or networking permitted without license from IHS Not for Resale

3.3.5 Straightness. Machine dowel pins shall be straight over the effective length within an accumulative total of 0.0005 in. per inch of length for nominal lengths, up to and including 4 in., and within 0.002 in. total for all nominal lengths over 4 in.

3.4 Surface Roughness

The surface roughness on hardened ground machine dowel pins shall not exceed 8 microinch (μin.) (arithmetical average) on the effective length nor 125 μin. (arithmetical average) on all other surfaces. Refer to ASME B46.1. For pins having additive finishes, these limits shall apply prior to coating or plating.

3.5 Material and Heat Treatment

3.5.1 Steel. Hardened ground machine dowel pins shall be made from any carbon or alloy steel capable of being heat treated to a core hardness of Rockwell C50 minimum and having sulphur and phosphorus content not in excess of 0.05% and 0.04%, respectively.

3.5.2 Heat Treatment. Pins shall be hardened by quenching in oil from the austenizing temperature and tempering to meet the following conditions.

3.5.2.1 Case Hardened Pins. Pins shall be case hardened to a minimum total case depth of 0.010 in. for nominal pin sizes $^{5}/_{32}$ in., or smaller, and 0.015 in. for nominal pin sizes $^{3}/_{16}$ in., and larger. The case shall have a minimum surface hardness of Rockwell C60, or equivalent, and the core hardness shall be Rockwell C47 to 58. The microstructure shall be tempered martensite.

3.5.2.2 Through Hardened Pins. At manufacturer's option, pins smaller than $^{1}/_{8}$ in. nominal size may be through hardened to a hardness of Rockwell C50 to 58. However, in no instance shall the hardness of the pin surface be softer than that of the core. The microstructure shall be tempered martensite.

3.6 Finishes

Unless otherwise specified, machine dowel pins shall be furnished with a ground (as processed) finish or with black oxide coating at the option of the manufacturer. Other protective or decorative finishes, where required, shall be subject to agreement between the manufacturer and purchaser. However, where a finish applied to carbon or alloy steel pins is such that it might produce hydrogen embrittlement, the pins shall be baked for a suitable time at a temperature that will obviate such embrittlement. Baking shall be accomplished as soon as possible following the plating or coating operating inasmuch as delay is detrimental to achieving the desired results. Where additive-type finishes are used, the tabulated dimensions and tolerances shall apply to the pins prior to application of the plating or coating, unless otherwise specified by the purchaser.

3.7 Workmanship

Dowel pins shall be free from detrimental burrs, cracks, seams, or nicks and other defects affecting their serviceability or properties.

3.8 Designation

3.8.1 Hardened ground machine dowel pins shall be designated by the following data, in the sequence shown: Product name (noun first), including pin series; nominal pin diameter (fraction or decimal equivalent); length (fraction or decimal equivalent); material; and protective finish, if required. See the following examples:

Pin, Hardened Ground Machine Dowel—Standard Series, $^{3}/_{8}$ × $1^{1}/_{2}$, Steel, Phosphate Coated

Pin, Hardened Ground Machine Dowel—Oversize Series, .6250 × 2.500, Steel

3.8.2 For a recommended part identifying numbering system (PIN), see ASME B18.24.3.

3.9 Application Information

3.9.1 Hole Sizes. Because of the wide variety of materials in which dowel pins are used and of the many design requirements which must be considered, it is not possible to provide hole size recommendations that will be suitable for all applications. However, the suggested hole sizes tabulated in this subparagraph have been commonly used for press-fitting standard series machine dowel pins into materials such as mild steels and cast iron. In soft materials such as aluminum or zinc die castings, hole size limits are usually decreased by 0.0005 in. to increase the press fit.

Copyright ASME International
Provided by IHS under license with ASME
No reproduction or networking permitted without license from IHS
Not for Resale

Nominal Pin Size	Suggested Hole Diameter for Standard Series Pins		Single Shear Load Carbon or Alloy Steel
	Max.	Min.	Calculated, lb
1/16	0.0625	0.0620	400
5/64	0.0781	0.0776	620
3/32	0.0937	0.0932	900
1/8	0.1250	0.1245	1,600
5/32	0.1562	0.1557	2,500
3/16	0.1875	0.1870	3,600
1/4	0.2500	0.2495	6,400
5/16	0.3125	0.3120	10,000
3/8	0.3750	0.3745	14,350
7/16	0.4375	0.4370	19,550
1/2	0.5000	0.4995	25,500
5/8	0.6250	0.6245	39,900
3/4	0.7500	0.7495	57,000
7/8	0.8750	0.8745	78,000
1	1.0000	0.9995	102,000

Holes for oversize series machine dowel pins may best be determined by the user to suit the particular application.

3.9.2 Design Calculations. For design calculations, the shear strength of these standard pins should be based on the values listed in subparagraph 3.9.1.

3.9.3 Responsibility for Modification. The manufacturer shall not be held responsible for malfunctions of product determined to be due to plating or other modifications when such plating or modification is not accomplished under his control or direction.

3.9.4 Installation Warning. Pins should not be installed by striking or hammering and, when installing with a press, a shield should be used and safety glasses worn.

4 GENERAL DATA FOR HARDENED GROUND PRODUCTION DOWEL PINS

4.1 Diameter

4.1.1 Size. Hardened ground production dowel pins have basic diameters which are 0.0002 in. over the nominal pin diameter. The diameter shall be ground, or ground and lapped, to within ±0.0001 in. of the basic diameter as specified in Table 3.

4.1.2 Roundness. The outer periphery of hardened ground production dowel pins shall conform to true round about the longitudinal axis of pin within 0.0001 in., when measured with equipment that will detect a lobed surface.

4.2 Ends

The ends of hardened ground production dowel pins shall be reasonably flat and perpendicular to the axis of pin. The corners at both ends of pins shall be rounded as defined in Table 3 and the accompanying figure.

4.3 Length

4.3.1 Measurement. The length of hardened ground production dowel pins shall be measured overall from end to end, parallel to the axis of pin.

4.3.2 Tolerance on Length. The tolerance on the length of hardened ground production dowel pins shall be ±0.010 in.

4.3.3 Preferred Lengths. The preferred sizes and lengths in which hardened ground production dowel pins are normally available are depicted in Table 3A. Other sizes and lengths are produced as required by the purchaser.

4.3.4 Straightness. Production dowel pins shall be straight over that portion of the pin length not affected by the rounded ends within an accumulative total of 0.0005 in. per inch of length for nominal lengths, up to and including 4 in., and within 0.002 in. total for all nominal lengths over 4 in.

4.4 Surface Roughness

The surface roughness on hardened ground production dowel pins shall not exceed 8 microinch (μin.) (arithmetical average) over the cylindrical portion of the pin length nor 125 microinch (μin) (arithmetical average) on all other surfaces. Refer to ASME B46.1. For pins having additive finishes, these limits shall apply prior to coating or plating.

4.5 Material and Heat Treatment

4.5.1 Steel. Hardened ground production dowel pins shall be made from carbon steel having a sulphur and phosphorus content not in excess of 0.05 and 0.04 percent, respectively.

Copyright ASME International
Provided by IHS under license with ASME
No reproduction or networking permitted without license from IHS
Not for Resale

4.5.2 Heat Treatment. Pins shall be case hardened to a minimum total case depth of 0.010 in. for nominal pin sizes 5/32 in., or smaller, and 0.02 in. for nominal pin sizes 3/16 in., and larger. Pins shall be quenched in oil from the austenizing temperature and tempered to provide a minimum case hardness of Rockwell C58, or equivalent, and a core hardness of Rockwell C50 to 55. The microstructure shall be tempered martensite.

4.6 Finishes

Unless otherwise specified, production dowel pins shall be furnished with a ground (as processed) finish, unplated or uncoated. Protective or decorative finishes, where required, shall be subject to agreement between the manufacturer and purchaser. However, where a finish applied to pins is such that it might produce hydrogen embrittlement, the pins shall be baked for a suitable time at a temperature that will obviate such embrittlement. Baking shall be accomplished as soon as possible following the plating or coating operation inasmuch as delay is detrimental to achieving the desired results. Where additive-type finishes are used, the tabulated dimensions and tolerances shall apply to the pins prior to application of the plating or coating, unless otherwise specified by the purchaser.

4.7 Workmanship

Dowel pins shall be free from burrs, cracks, seams, scratches, and nicks, and any other defects affecting their serviceability.

4.8 Application Information

4.8.1 Hole Sizes. Because of the wide variety of materials in which dowel pins are used and the many design requirements which must be considered, it is not possible to provide hole size recommendations that will be suitable for all applications. However, the suggested hole sizes tabulated at the end of this subparagraph have been commonly used for press-fitting production dowel pins into materials such as mild steels and cast iron. In soft materials such as aluminum or zinc die castings, hole size limits are usually decreased by 0.0005 in. to increase the press fit.

Nominal Pin Sizes	Suggested Hole Diameter		Single Shear Load, Calculated, lb
	Max.	Min.	
1/16	0.0625	0.0620	395
3/32	0.0937	0.0932	700
7/64	0.1094	0.1089	950
1/8	0.1250	0.1245	1,300
5/32	0.1562	0.1557	2,050
3/16	0.1875	0.1870	2,950
7/32	0.2188	0.2183	3,800
1/4	0.2500	0.2495	5,000
5/16	0.3125	0.3120	8,000
3/8	0.3750	0.3745	11,500

4.8.2 Design Calculations. For design calculations the shear strength of these standard pins should be based on the values listed in subparagraph 4.8.1.

4.9 Designation

4.9.1 Hardened ground production dowel pins shall be designated by the following data in the sequence shown: Product name (noun first); nominal pin diameter (fraction or decimal equivalent); length (fraction or decimal equivalent); material, and protective finish, if required. See the following examples:

Pin, Hardened Ground Production Dowel, 1/8 × 3/4, Steel, Phosphate Coated

Pin, Hardened Ground Production Dowel, 0.375 × 1.500, Steel

4.9.2 For a recommended part identifying numbering system (PIN), see ASME B18.24.3.

5 GENERAL DATA FOR UNHARDENED GROUND DOWEL PINS

5.1 Diameter

5.1.1 Size. Unhardened ground dowel pins are normally produced by grinding the outside diameter of commercial wire or rod material to size. Consequently, the maximum diameters of the pins, as specified in Table 4, are below the minimum commercial stock sizes by graduated amounts from 0.0005 in. on the 1/16 in. nominal pin size to 0.0028 in. on the 1 in. nominal pin size.

5.1.2 Roundness. The outer periphery of unhardened ground dowel pins shall conform to true round about the longitudinal axis of pin within 0.00025 in.,

Copyright ASME International
Provided by IHS under license with ASME
No reproduction or networking permitted without license from IHS

Not for Resale

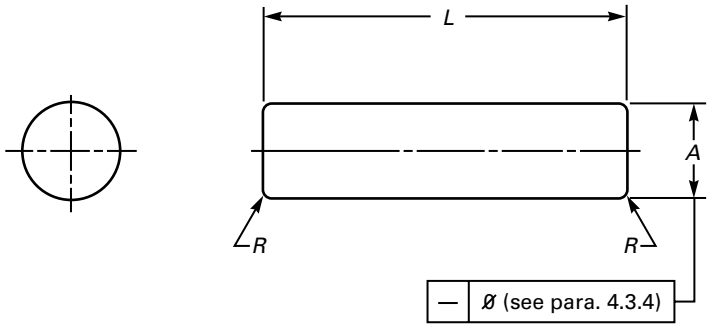

TABLE 3 DIMENSIONS OF HARDENED GROUND PRODUCTION DOWEL PINS

Nominal Size or Nominal Pin Diameter [Note (1)]		A			R	
		Pin Diameter			Corner Radius	
		Basic	Max.	Min.	Max.	Min.
1/16	0.0625	0.0627	0.0628	0.0626	0.020	0.010
3/32	0.0938	0.0939	0.0940	0.0938	0.020	0.010
7/64	0.1094	0.1095	0.1096	0.1094	0.020	0.010
1/8	0.1250	0.1252	0.1253	0.1251	0.020	0.010
5/32	0.1562	0.1564	0.1565	0.1563	0.020	0.010
3/16	0.1875	0.1877	0.1878	0.1876	0.020	0.010
7/32	0.2188	0.2189	0.2190	0.2188	0.020	0.010
1/4	0.2500	0.2502	0.2503	0.2501	0.020	0.010
5/16	0.3125	0.3127	0.3128	0.3126	0.020	0.010
3/8	0.3750	0.3752	0.3753	0.3751	0.020	0.010

GENERAL NOTES:
(a) For additional requirements refer to Section 4.
(b) Reference ASME Y14.5M.

CHARACTERISTICS	SYMBOL
Straightness	–
Diameter	ø

NOTE:
(1) Where specifying nominal pin size in decimals, zeros preceding decimal and in the fourth decimal place shall be omitted.

when measured with equipment that will detect a lobed surface.

5.2 Ends

The ends of unhardened ground dowel pins shall be reasonably flat and perpendicular to the axis of pin. The corners at both ends of pins shall be chamfered to the dimensions given in Table 4 and the accompanying figure. The contour of the chamfer surface shall be optional providing the juncture of chamfer with the pin outside diameter is such as to permit pins to be pressed into a hole of the respective minimum suggested hole size (see para. 5.8) in AA 2011-T3 aluminum material without shaving the hole sides.

5.3 Length

5.3.1 Measurement. The length of unhardened ground dowel pins shall be measured overall from end to end, parallel to the axis of pin.

5.3.2 Tolerance on Length. The tolerance on length of unhardened ground dowel pins shall be ±0.010 in.

Copyright ASME International
Provided by IHS under license with ASME
No reproduction or networking permitted without license from IHS Not for Resale

TABLE 3A
PREFERRED SIZES AND LENGTHS OF HARDENED GROUND PRODUCTION DOWEL PINS

Nominal Length	Nominal Size									
	1/16	3/32	7/64	1/8	5/32	3/16	7/32	1/4	5/16	3/8
3/16	x	x	x	x	x	x				
1/4	x	x	x	x	x	x	x	x		
5/16	x	x	x	x	x	x	x	x	x	
3/8	x	x	x	x	x	x	x	x	x	x
7/16	x	x	x	x	x	x	x	x	x	x
1/2	x	x	x	x	x	x	x	x	x	x
9/16	x	x	x	x	x	x	x	x	x	x
5/8	x	x	x	x	x	x	x	x	x	x
11/16	x	x	x	x	x	x	x	x	x	x
3/4	x	x	x	x	x	x	x	x	x	x
13/16	x	x	x	x	x	x	x	x	x	x
7/8	x	x	x	x	x	x	x	x	x	x
15/16	x	x	x	x	x	x	x	x	x	x
1	x	x	x	x	x	x	x	x	x	x
1 1/8		x	x	x	x	x	x	x	x	x
1 1/4		x	x	x	x	x	x	x	x	x
1 3/8		x	x	x	x	x	x	x	x	x
1 1/2		x	x	x	x	x	x	x	x	x
1 5/8		x	x	x	x	x	x			
1 3/4		x	x	x	x	x	x	x	x	x
1 7/8		x	x	x	x	x	x			
2		x	x	x	x	x	x	x	x	x
2 1/4								x	x	x
2 1/2								x	x	x
3										x

5.3.3 Preferred Lengths. The preferred sizes and lengths in which unhardened and ground dowel pins are normally available are depicted in Table 4A. Other sizes and lengths are produced as required by the purchaser.

5.3.4 Straightness. Unhardened ground dowel pins shall be straight over that portion of the pin length bounded by the end chamfers within an accumulative total of 0.0005 in. per inch of pin length.

5.4 Surface Roughness

The surface roughness on unhardened ground dowel pins shall not exceed 32 microinch (μin.) (arithmetical average) over the cylindrical portion of the pin length nor 250 microinch (μin.) (arithmetical average) on all other surfaces. Refer to ASME B46.1. For pins having additive finishes, these limits shall apply prior to coating or plating.

5.5 Materials

5.5.1 Steel. Unhardened ground dowel pins shall be made from carbon steel optional with the manufacturer but having a maximum hardness of Rockwell C32 for nominal pin sizes up to and including 1/8 in.;

Copyright ASME International
Provided by IHS under license with ASME
No reproduction or networking permitted without license from IHS

Not for Resale

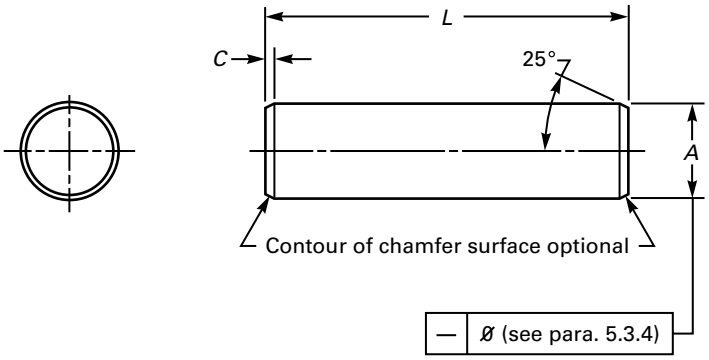

TABLE 4 DIMENSIONS OF UNHARDENED GROUND DOWEL PINS

Nominal Size or Basic Pin Diameter [Note (1)]		A		C		Double Shear Load Min., lb.	
		Pin Diameter		Chamfer Length		Material	
		Max.	Min.	Max.	Min.	Carbon Steel	Brass
1/16	0.0625	0.0600	0.0595	0.025	0.005	350	220
3/32	0.0938	0.0912	0.0907	0.025	0.005	820	510
*7/64	0.1094	0.1068	0.1063	0.025	0.005	1,130	710
1/8	0.1250	0.1223	0.1218	0.025	0.005	1,490	930
5/32	0.1562	0.1535	0.1530	0.025	0.005	2,350	1,470
3/16	0.1875	0.1847	0.1842	0.025	0.005	3,410	2,130
7/32	0.2188	0.2159	0.2154	0.025	0.005	4,660	2,910
1/4	0.2500	0.2470	0.2465	0.025	0.005	6,120	3,810
5/16	0.3125	0.3094	0.3089	0.040	0.020	9,590	5,990
3/8	0.3750	0.3717	0.3712	0.040	0.020	13,850	8,650
7/16	0.4375	0.4341	0.4336	0.040	0.020	18,900	11,810
1/2	0.5000	0.4964	0.4959	0.040	0.020	24,720	15,450
5/8	0.6250	0.6211	0.6206	0.055	0.035	38,710	24,190
3/4	0.7500	0.7548	0.7453	0.055	0.035	55,840	34,900
7/8	0.8750	0.8705	0.8700	0.070	0.050	76,090	47,550
1	1.0000	0.9952	0.9947	0.070	0.050	99,460	62,160

GENERAL NOTES:
(a) For additional requirements refer to Section 5.
(b) Reference ASME Y14.5M.

CHARACTERISTICS	SYMBOL
Straightness	–
Diameter	ø

NOTES:
(1) Where specifying nominal pin size in decimals, zeros preceding decimal and in the fourth decimal place shall be omitted.
* Nonpreferred sizes, not recommended for use in new designs.

Copyright ASME International
Provided by IHS under license with ASME
No reproduction or networking permitted without license from IHS Not for Resale

TABLE 4A PREFERRED SIZES AND LENGTHS OF UNHARDENED GROUND DOWEL PINS

Nominal Length	Nominal Size														
	1/16	3/32	1/8	5/32	3/16	7/32	1/4	5/16	3/8	7/16	1/2	5/8	3/4	7/8	1
1/4	x	x	x	x	x	x	x								
5/16	x	x	x	x	x	x	x	x							
3/8	x	x	x	x	x	x	x	x	x						
7/16	x	x	x	x	x	x	x	x	x	x					
1/2	x	x	x	x	x	x	x	x	x	x	x				
9/16	x	x	x	x	x	x	x	x	x	x					
5/8	x	x	x	x	x	x	x	x	x	x	x	x			
11/16	x	x	x	x	x	x	x	x	x						
3/4	x	x	x	x	x	x	x	x	x	x	x	x	x		
13/16	x	x	x	x	x	x	x	x	x						
7/8	x	x	x	x	x	x	x	x	x	x	x	x	x	x	
15/16	x	x	x	x	x	x	x	x	x	x					
1	x	x	x	x	x	x	x	x	x	x	x	x	x	x	x
1 1/8		x	x	x	x	x	x	x	x	x	x	x			
1 1/4		x	x	x	x	x	x	x	x	x	x	x	x	x	x
1 3/8		x	x	x	x	x	x	x	x	x	x	x			
1 1/2		x	x	x	x	x	x	x	x	x	x	x	x	x	x
1 5/8			x	x	x	x									
1 3/4			x	x	x	x	x	x	x	x	x	x	x	x	x
1 7/8			x	x	x	x									
2			x	x	x	x	x	x	x	x	x	x	x	x	x
2 1/4							x	x	x	x	x				
2 1/2							x	x	x	x	x	x	x	x	x
3											x	x	x	x	x
3 1/2												x	x	x	x
4												x	x	x	x

Rockwell C23 for nominal sizes over 1/8 to 1/2 in.,inclusive; and Rockwell B95 for all larger nominal pin sizes.

5.5.2 Brass. Brass pins, when specified, shall be made from ASTM B16 (half hard) or SAE CA 360 (half hard), or equivalent, copper alloys.

5.5.3 Shear Strength. Unhardened ground dowel pins shall have a single shear strength of 64,000 psi minimum for pins made from steel and 40,000 psi minimum when made from brass. They shall be capable of withstanding the minimum double shear loads specified in Table 4 for the respective materials when tested in accordance with the double shear testing of pins set forth in Appendix B. The holes in test fixtures shall conform with the maximum pin diameter within a tolerance of plus 0.0001 in. and minus 0.0003 in.

5.6 Finishes

Unless otherwise specified, unhardened ground dowel pins shall be furnished with a natural (as processed) finish, unplated or uncoated. Other protective or decorative finishes, where required, shall be subject to agreement between the manufacturer and purchaser.

Copyright ASME International
Provided by IHS under license with ASME
No reproduction or networking permitted without license from IHS

Not for Resale

Where additive-type finishes are used, the tabulated dimensions and tolerances shall apply to the pins prior to application of the plating or coating, unless otherwise specified by the purchaser.

5.7 Workmanship

Dowel pins shall be free from burrs, seams, sharp edges, and any other defects affecting their serviceability.

5.8 Hole Sizes

Because of the wide variety of materials in which dowel pins are used and of the many design requirements that must be considered, it is not possible to provide hole size recommendations that will be suitable for all applications. However, experience has indicated that the suggested hole sizes tabulated at the end of this subparagraph are satisfactory for press fitting pins into mild steels and cast and malleable irons. In soft materials such as aluminum alloys or zinc die castings, hole size limits are usually decreased by 0.0005 in. to increase the press fit.

Nominal Pin Size	Suggested Hole Diameter	
	Max.	Min.
1/16	0.0595	0.0580
3/32	0.0907	0.0892
7/64	0.1062	0.1047
1/8	0.1217	0.1202
5/32	0.1528	0.1513
3/16	0.1840	0.1825
7/32	0.2151	0.2136
1/4	0.2462	0.2447
5/16	0.3085	0.3070
3/8	0.3708	0.3693
7/16	0.4331	0.4316
1/2	0.4954	0.4939
5/8	0.6200	0.6185
3/4	0.7446	0.7431
7/8	0.8692	0.8677
1	0.9938	0.9923

5.9 Designation

5.9.1 Unhardened ground dowel pins shall be designated by the following data, in the sequence shown: Product name (noun first); nominal pin diameter (fraction or decimal equivalent); length (fraction or decimal equivalent); material; and protective finish, if required. See examples below:

Pin, Unhardened Ground Dowel, 1/8 × 3/4, Steel

Pin, Unhardened Ground Dowel, .250 × 2.500, Steel, Zinc Plated

5.9.2 For a recommended part identifying numbering system (PIN), see ASME B18.24.3.

6 GENERAL DATA FOR STRAIGHT PINS

6.1 DIAMETER

6.1.1 Size. The diameter of both chamfered and square end straight pins shall conform to that of the commercial wire or rod from which the pins are made. The tolerances specified in Table 5 are applicable to carbon steel and some deviations in the diameter limits may be necessary for pins made from other materials.

6.2 Ends

6.2.1 General. The ends of straight pins shall be flat and reasonably perpendicular to the axis of pin. Cut-off nibs not protruding more than 0.01 in. beyond pin ends shall be permissible.

6.2.2 Chamfered Straight Pins. The corners of both ends of chamfered straight pins shall be chamfered to the dimensions specified in Table 5. The contour of the chamfer surface shall be optional.

6.2.3 Square End Straight Pins. The corners of both ends of square end straight pins shall be broken with a radius or chamfer conforming to the specified limits.

6.3 Length

6.3.1 Measurement. The length of straight pins shall be measured overall from end to end, parallel to the axis of pin, excluding cut-off nibs where they exist.

6.3.2 Tolerance on Length. The tolerance on length shall be ±0.01 in.

6.3.3 Length Increments. Lengths shall be as specified by purchaser. However, it is recommended that nominal pin lengths be limited to increments of not less than 0.062 in.

Copyright ASME International
Provided by IHS under license with ASME
No reproduction or networking permitted without license from IHS
Not for Resale

6.3.4 Straightness. Pins shall be straight over the entire length within a total runout equivalent to 0.001 in. per inch of length.

6.4 Materials

6.4.1 Steel. Straight pins are normally made from cold drawn steel wire or rod having a maximum carbon content of 0.28%. Unless otherwise agreed upon between the manufacturer and purchaser, no mechanical property requirements shall apply.

6.4.2 Other Materials. Where required, pins may also be made from corrosion resistant steel, brass, or other metals, having chemical and mechanical properties as agreed upon between the manufacturer and purchaser.

6.5 Finishes

Unless otherwise specified, straight pins shall be furnished with a natural (as processed) finish, unplated or uncoated. Other finishes, where required, shall be subject to agreement between the manufacturer and purchaser. Where additive-type finishes are used, the tabulated dimensions and tolerances shall apply to the pins prior to application of the plating or coating, unless otherwise specified by the purchaser.

6.6 Workmanship

Straight pins shall be free from peripheral burrs, excessive cut-off nibs, seams, scale, sharp edges and any other defects affecting their serviceability.

6.7 Designation

6.7.1 Straight pins shall be designated by the following data, in the sequence shown: Product name (noun first); nominal size (fraction or decimal equivalent); length (fraction or decimal equivalent); material; and protective finish, if required. See the following examples:

Pin, Chamfered Straight, $\frac{1}{8}$ × 1.500, Steel

Pin, Square End Straight, .250 × 2.250 Steel, Zinc Plated

6.7.2 For a recommended part identifying numbering system (PIN), see ASME B18.24.3.

7 GENERAL DATA FOR GROOVED PINS, GROOVED DRIVE STUDS, AND GROOVED T-HEAD COTTER PINS

7.1 Heads of Grooved Drive Studs and T-Head Cotter Pins

7.1.1 Bearing Surface. The bearing surface of head on round-head grooved drive studs and grooved T-head cotter pins, shall be flat and perpendicular with the axis of pin (determined over a distance from under the head equivalent to 1.5 times the basic diameter) within 2 deg.

7.1.2 Head Position. The axis of head on round-head grooved drive studs and grooved T-head cotter pins shall be located at true position with respect to the axis of the shank within a tolerance zone having a diameter equivalent to 12% of the maximum head diameter or 0.02 in., whichever is greater.

7.1.2.1 Eccentricity shall be equal to one-half of the full or total indicator reading.

7.2 Diameters

7.2.1 Size. The pin diameter and shank diameter, A, specified in Tables 6, 7, and 8, respectively, conform with that of the commercial wire from which the pins and studs are fabricated and is the basis for the product size.

7.2.2 Expanded Diameter. The expanded diameter, B, specified in Tables 6A, 6B, 7, and 8 represents the diameter over the crests of raised ridges formed by the material displaced when grooves are produced. It is dependent upon the depth, shape, and length of the grooves and the pin material. Conformance of expanded diameters to minimum and maximum dimensions shall be determined by the use of GO and NO GO plain ring gages, respectively.

7.2.3 Tolerances. The tolerances specified in Table 6 are applicable to carbon steel pins made from wire. Deviations in the diameter limits may be necessary for pins made from other material or from bar stock as agreed to by the manufacturer and the purchaser.

Copyright ASME International
Provided by IHS under license with ASME
No reproduction or networking permitted without license from IHS
Not for Resale

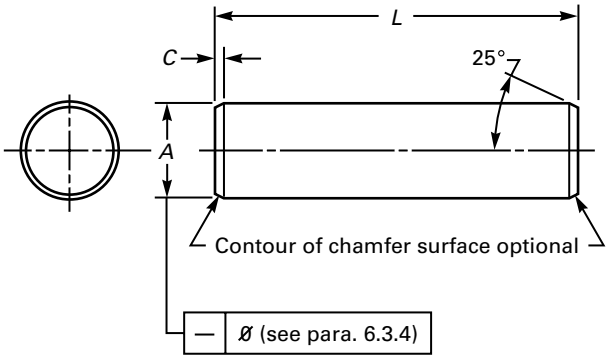

Chamfered Straight Pin

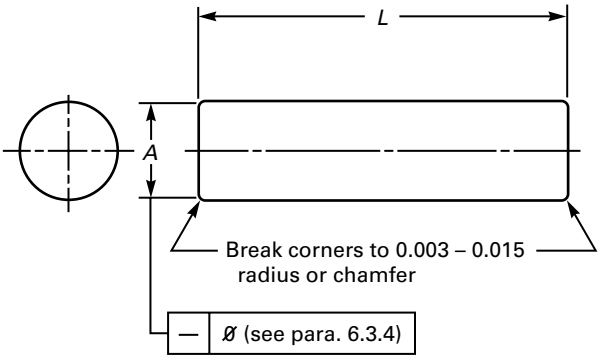

Square End Straight Pin

TABLE 5 DIMENSIONS OF CHAMFERED AND SQUARE END STRAIGHT PINS

Nominal Size or Basic Pin Diameter [Note (1)]		A Pin Diameter		C Chamfer Length	
		Max.	Min.	Max.	Min.
1/16	0.062	0.0625	0.0605	0.025	0.005
3/32	0.094	0.0937	0.0917	0.025	0.005
7/64	0.109	0.1094	0.1074	0.025	0.005
1/8	0.125	0.1250	0.1230	0.025	0.005
5/32	0.156	0.1562	0.1542	0.025	0.005
3/16	0.188	0.1875	0.1855	0.025	0.005
7/32	0.219	0.2187	0.2167	0.025	0.005
1/4	0.250	0.2500	0.2480	0.025	0.005
5/16	0.312	0.3125	0.3105	0.040	0.020
3/8	0.375	0.3750	0.3730	0.040	0.020
7/16	0.438	0.4375	0.4355	0.040	0.020
1/2	0.500	0.5000	0.4980	0.040	0.020
5/8	0.625	0.6250	0.6230	0.055	0.035
3/4	0.750	0.7500	0.7480	0.055	0.035
7/8	0.875	0.8750	0.8730	0.055	0.035
1	1.000	1.0000	0.9980	0.055	0.035

GENERAL NOTES:
(a) For additional requirements refer to Section 6.
(b) Reference ASME Y14.5M.

CHARACTERISTICS	SYMBOL
Straightness	–
Diameter	ø

NOTE:
(1) Where specifying nominal pin size in decimals, zeros preceding decimal and in the fourth decimal place shall be omitted.

Copyright ASME International
Provided by IHS under license with ASME
No reproduction or networking permitted without license from IHS Not for Resale

7.3 Grooves

7.3.1 Grooved Pins and Drive Studs. Grooved pins and drive studs shall have three grooves equally spaced on the diameter. All grooves in any pin or stud shall be of uniform depth, shape, and length and the crests shall be free from tears, burrs, or other irregularities, over the entire length of groove. Grooves shall be aligned with axis of pin or stud and, unless otherwise specified, shall be parallel, oval, or tapered and of length as designated for the respective pin types. For Types H and E grooved pins having groove lengths equal to 0.125 in. or shorter, the grooves shall be parallel instead of tapered or oval as depicted in the illustrations.

7.3.2 Grooved T-Head Cotter Pins. Grooved T-Head Cotter Pins shall have three grooves equally spaced on the diameter. Deformation of the shank diameter between the grooves is permitted, however, this may cause high insertion pressures. Where high insertion pressures cannot be tolerated, a solution should be negotiated between the user and the supplier.

7.3.3 Groove Length. The groove length shall not vary more than ±0.03 in.

7.4 Ends

7.4.1 Grooved Pins. Except for nominal lengths of $\frac{1}{4}$ in. or shorter, on which ends are neither crowned nor chamfered, both ends of grooved pins shall be crowned or chamfered as specified for the respective types. Pins made from alloy steel shall have a chamfer on both ends conforming with that specified for Type F pins in lieu of crowned ends. At the manufacturers' option, the ends of pins in nominal sizes up to and including $\frac{1}{4}$ in. may be tumbled to provide rounded corners equivalent to a 0.015 in. ± 0.005 in. radius.

7.4.2 Chamfered Ends. Chamfered ends shall be 35 ±5 deg.

7.4.3 Grooved Drive Studs. The ends of grooved drive studs shall have a definite chamfer.

7.4.4 Grooved T-Head Cotter Pins. The ends of grooved T-head cotter pins may have square, rounded, or chamfered corners conforming to manufacturer's practices.

7.5 Length

7.5.1 Measurement. The length of grooved pins, drive studs, and T-head cotter pins shall be measured, parallel to the axis of product as defined in the following.

7.5.1.1 Grooved Pins. The length of grooved pins with chamfered, radiussed, or sheared ends shall be measured overall from end to end. The length of grooved pins with crowned ends shall be measured at L + 2E.

7.5.1.2 Grooved Drive Studs and T-Head Cotter Pins. The length of round-head grooved drive studs and grooved T-head cotter pins shall be measured from the extreme end of the shank to the bearing surface of the head.

7.5.2 Tolerance on Length. The tolerance on length of grooved pins and grooved drive studs shall be ±0.01 in. The tolerance on length of grooved T-head cotter pins shall be ±0.031 in.

7.5.3 Standard Lengths. The standard sizes and lengths in which grooved pins of all types, grooved drive studs, and T-head cotter pins are normally available are depicted in Tables 6C, 7, 7A, and 8A, respectively. Where other size-length combinations and materials are required, manufacturers should be consulted.

7.6 Materials

7.6.1 Grooved Pins. Grooved pins are normally made from cold-drawn low carbon steel wire or rod. Where additional performance is required, carbon steel pins may be supplied surface hardened to a hardness consistent with the performance requirements.

Where required for specific applications, pins may also be made from alloy steel, corrosion resistant steel, brass, monel, and other nonferrous metals having chemical properties as agreed upon between the manufacturer and purchaser.

Copyright ASME International
Provided by IHS under license with ASME
No reproduction or networking permitted without license from IHS
Not for Resale

Nominal Pin Size Diameter	Double Shear Load, Min., lb			
	Material			
	Low Carbon Steel	Alloy Steel (Rockwell C40-48)	Corrosion Resistant Steel	Brass
1/32	100	180	140	60
3/64	220	400	300	140
1/16	410	720	540	250
5/64	620	1,120	860	390
3/32	890	1,600	1,240	560
7/64	1,220	2,180	1,680	760
1/8	1,600	2,820	2,200	990
5/32	2,300	4,520	3,310	1,540
3/16	3,310	6,440	4,760	2,220
7/32	4,510	8,770	6,480	3,020
1/4	5,880	11,500	8,460	3,950
5/16	7,660	17,900	12,700	6,170
3/8	11,000	26,000	18,200	9,050
7/16	15,000	35,200	24,800	12,100
1/2	19,600	46,000	32,400	15,800

7.6.2 Grooved Drive Studs and T-Head Cotter Pins. Unless otherwise specified, grooved drive studs and T-head cotter pins shall be made from low carbon steel. Where so indicated by purchaser, they may be made from corrosion resistant steel, brass, and other nonferrous metals as agreed upon between the manufacturer and purchaser.

7.7 Performance Requirements

Grooved pins shall be capable of withstanding the minimum double shear loads tabulated in para. 7.8 for the respective materials, when tested in accordance with the double shear testing of pins set forth in Appendix B. The holes in the fixtures for testing grooved pins shall conform with the specified recommended hole size limits.

Grooved pins which have been sheared at loads exceeding the minimums specified shall exhibit a ductile fracture at the shear point with no longitudinal cracks.

7.8 Hole Sizes

To obtain optimum product retention under average conditions, it is recommended that holes for installation of grooved pins and grooved drive studs shown in this paragraph, and those for grooved T-head cotter pins given in Table 8 be held as close as possible to the limits tabulated. The minimum limits given correspond to the drill size which is equivalent to the basic pin or shank diameter. The maximum limits shown are generally suitable for length-to-diameter ratios of not less than 4 to 1 and not greater than 10 to 1. For smaller length-to-diameter ratios, the holes should be held closer to the minimum limits where retention is critical. Conversely, for larger length-to-diameter ratios or where retention requirements are not essential, it may be desirable to increase the hole diameter beyond the maximum limits shown.

Recommended Hole Sizes for Unplated Grooved Pins

Nominal Pin Size	Drill Size	Hole Diameter	
		Max.	Min.
1/32	1/32	0.0324	0.0312
3/64	3/64	0.0482	0.0469
1/16	1/16	0.0640	0.0625
5/64	5/64	0.0798	0.0781
3/32	3/32	0.0956	0.0938
7/64	7/64	0.1113	0.1094
1/8	1/8	0.1271	0.1250
5/32	5/32	0.1587	0.1563
3/16	3/16	0.1903	0.1875
7/32	7/32	0.2219	0.2188
1/4	1/4	0.2534	0.2500
5/16	5/16	0.3166	0.3125
3/8	3/8	0.3797	0.3750
7/16	7/16	0.4428	0.4375
1/2	1/2	0.5060	0.5000

In applications where the grooved products are to be installed into materials which are appreciably harder than the product material, it is recommended the edges of the holes be chamfered or otherwise relieved to avoid shearing of the expanded pin or shank section during insertion.

7.9 Finishes

Recommended Hole Sizes for Unplated Grooved Pins

Nominal Pin Size	Drill Size	Hole Diameter	
		Max.	Min.
0	51	0.0686	0.0670
2	44	0.0877	0.0860
4	37	0.1059	0.1040
6	31	0.1220	0.1200
7	29	0.1382	0.1360
8	27	0.1463	0.1440
10	20	0.1636	0.1610
12	9	0.1990	0.1960
14	2	0.2240	0.2210
16	1/4	0.2534	0.2500

Copyright ASME International
Provided by IHS under license with ASME
No reproduction or networking permitted without license from IHS
Not for Resale

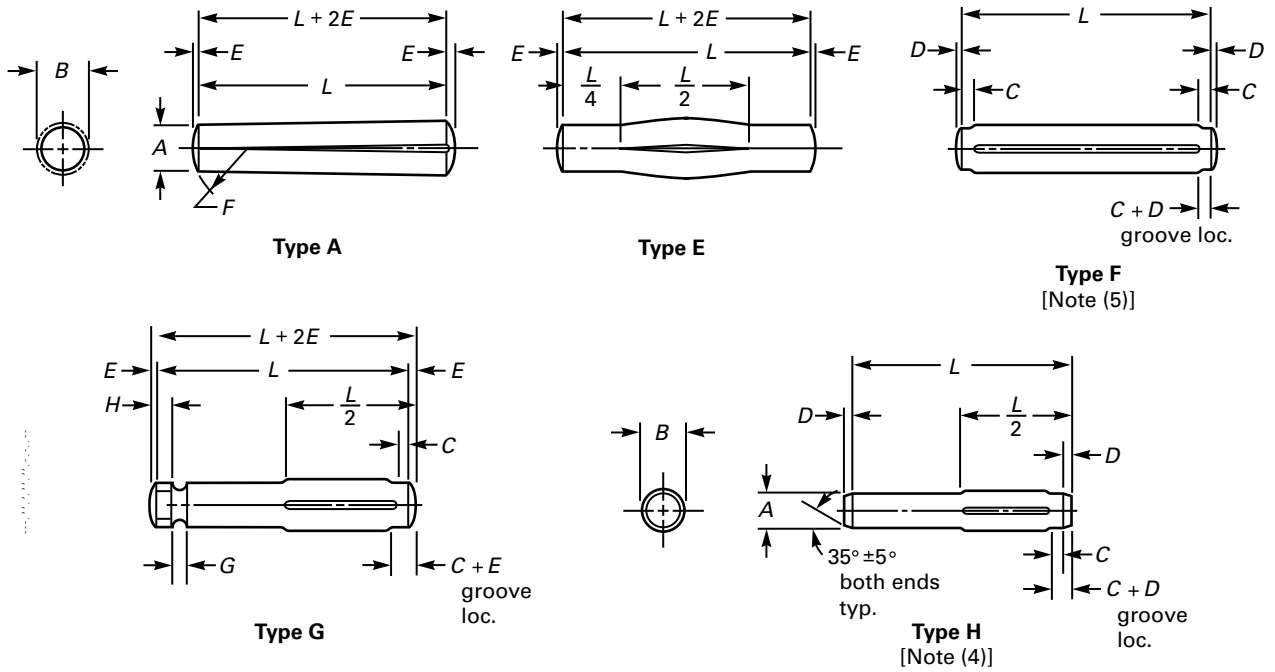

TABLE 6 DIMENSIONS OF GROOVED PINS [Note (1)]

Nominal Size or Basic Pin Diameter [Note (2)]	A		C	D [Note (3)]	E [Note (3)]	F [Note (3)]		G		H		J	K	
	Pin Diameter		Pilot Length	Chamfer Length	Crown Height	Crown Radius		Neck Width		Shoulder Length		Neck Radius	Neck Diameter	
	Max.	Min.	Ref	Min.	Nom.	Max.	Min.	Max.	Min.	Max.	Min.	Ref	Max.	Min.
1/32[6] 0.0312	0.0312	0.0297	0.015	...	...	...	...	...	...	...	...	...	...	...
3/64[6] 0.0469	0.0469	0.0454	0.031	...	...	...	...	...	...	...	...	...	...	...
1/16 0.0625	0.0625	0.0610	0.031	0.005	0.0065	0.088	0.068	...	...	...	...	...	...	...
5/64[6] 0.0781	0.0781	0.0766	0.031	0.005	0.0087	0.104	0.084	...	...	...	...	...	...	...
3/32 0.0938	0.0938	0.0923	0.031	0.005	0.0091	0.135	0.115	0.038	0.028	0.041	0.031	0.016	0.067	0.057
7/64[6] 0.1094	0.1094	0.1074	0.031	0.005	0.0110	0.150	0.130	0.038	0.028	0.041	0.031	0.016	0.082	0.072
1/8 0.1250	0.1250	0.1230	0.031	0.005	0.0130	0.166	0.146	0.069	0.059	0.041	0.031	0.031	0.088	0.078
5/32 0.1563	0.1563	0.1543	0.062	0.005	0.0170	0.198	0.178	0.069	0.059	0.057	0.047	0.031	0.109	0.099
3/16 0.1875	0.1875	0.1855	0.062	0.016	0.0180	0.260	0.240	0.069	0.059	0.057	0.047	0.031	0.130	0.120
7/32 0.2188	0.2188	0.2168	0.062	0.016	0.0220	0.291	0.271	0.101	0.091	0.072	0.062	0.047	0.151	0.141
1/4 0.2500	0.2500	0.2480	0.062	0.016	0.0260	0.322	0.302	0.101	0.091	0.072	0.062	0.047	0.172	0.162
5/16 0.3125	0.3125	0.3105	0.094	0.031	0.0340	0.385	0.365	0.132	0.122	0.104	0.094	0.062	0.214	0.204
3/8 0.3750	0.3750	0.3730	0.094	0.031	0.0390	0.479	0.459	0.132	0.122	0.135	0.125	0.062	0.255	0.245
7/16 0.4375	0.4375	0.4355	0.094	0.031	0.0470	0.541	0.521	0.195	0.185	0.135	0.125	0.094	0.298	0.288
1/2 0.5000	0.5000	0.4980	0.094	0.031	0.0520	0.635	0.615	0.195	0.185	0.135	0.125	0.094	0.317	0.307

GENERAL NOTE: For additional requirements and recommended hole sizes see Section 7.

NOTES:

(1) For expanded diameters applicable to pins made from corrosion resistant steel or monel, see Table 6B; and for pins made from other materials, see Table 6A.
(2) Where specifying nominal size in decimals, zeros preceding decimal and in the fourth decimal place shall be omitted.
(3) Pins in 1/32 and 3/64 in. sizes of any length and all sizes 1/4 in. nominal length, or shorter, are not crowned or chamfered. See para. 7.4 of General Data. Alloy steel pins of all types shall have chamfered ends conforming with Type F pins, included within the pin length.
(4) Type H replaces Types B and D as previously used in ANSI B18.8.2-1978 (see Appendix C).
(5) Type F replaces Type C as previously used in ANSI B18.8.2-1978 (see Appendix C).
(6) Non-stock items — not recommended for new design.

Copyright ASME International
Provided by IHS under license with ASME
No reproduction or networking permitted without license from IHS
Not for Resale

TABLE 6A
EXPANDED DIAMETERS FOR GROOVED PINS MADE FROM LOW CARBON OR ALLOY STEEL

Groove Length [Note (1)]	Nominal Size														
	1/32 [Note (2)]	3/64 [Note (2)]	1/16	5/64 [Note (2)]	3/32	7/64 [Note (2)]	1/8	5/32	3/16	7/32	1/4	5/16	3/8	7/16	1/2
	B, Expanded Pin Diameter														
	± 0.0015				± .002		± .0025					± 0.003			
0.125	0.035	0.051	0.068	0.084	0.101	0.117	0.134								
0.188	0.035	0.051	0.068	0.084	0.101	0.117	0.134	0.166	0.198						
0.250	0.035	0.051	0.068	0.084	0.101	0.117	0.134	0.166	0.198	0.230	0.263				
0.312	0.035	0.051	0.068	0.084	0.101	0.117	0.134	0.166	0.198	0.230	0.263	0.329			
0.375	0.035	0.051	0.068	0.084	0.101	0.117	0.134	0.166	0.198	0.230	0.263	0.329	0.394		
0.438	0.035	0.051	0.068	0.084	0.101	0.117	0.134	0.166	0.198	0.230	0.263	0.329	0.394	0.459	
0.500	0.035	0.051	0.068	0.084	0.101	0.117	0.134	0.166	0.198	0.230	0.263	0.329	0.394	0.459	0.525
0.562		0.051	0.068	0.084	0.101	0.117	0.134	0.166	0.198	0.230	0.263	0.329	0.394	0.459	0.525
0.625		0.051	0.068	0.084	0.101	0.117	0.134	0.166	0.198	0.230	0.263	0.329	0.394	0.459	0.525
0.750			0.067	0.083	0.100	0.116	0.134	0.166	0.198	0.230	0.263	0.329	0.394	0.459	0.525
0.875			0.067	0.083	0.100	0.116	0.133	0.166	0.198	0.230	0.263	0.329	0.394	0.459	0.525
1.000			0.067	0.083	0.100	0.116	0.133	0.166	0.198	0.230	0.263	0.329	0.394	0.459	0.525
1.125					0.100	0.116	0.132	0.164	0.197	0.230	0.263	0.329	0.394	0.459	0.525
1.250					0.100	0.116	0.132	0.164	0.197	0.230	0.263	0.329	0.394	0.459	0.525
1.375							0.132	0.164	0.197	0.229	0.262	0.329	0.394	0.459	0.525
1.500							0.132	0.164	0.197	0.229	0.262	0.329	0.394	0.459	0.525
1.625								0.163	0.197	0.229	0.262	0.328	0.393	0.459	0.525
1.750								0.163	0.197	0.229	0.262	0.328	0.393	0.459	0.525
1.875								0.163	0.196	0.229	0.262	0.328	0.393	0.458	0.525
2.000								0.163	0.196	0.229	0.262	0.328	0.393	0.458	0.525
2.125									0.196	0.229	0.262	0.328	0.393	0.458	0.524
2.250									0.196	0.229	0.262	0.328	0.393	0.458	0.524
2.500										0.228	0.261	0.327	0.393	0.458	0.524
2.750										0.228	0.261	0.327	0.393	0.458	0.524
3.000										0.227	0.260	0.327	0.392	0.457	0.523
3.250											0.260	0.326	0.392	0.457	0.523
3.500												0.326	0.391	0.456	0.522
3.750													0.391	0.456	0.522
4.000													0.390	0.455	0.521
4.250													0.390	0.455	0.521
4.500														0.454	0.520

GENERAL NOTE: For expanded diameters applicable to pins made from corrosion resistant steel or monel, see Table 6B.

NOTES:

(1) Groove length shall be considered as being substantially equal to the pin length for Types A, C, and F grooved pins, and equal to one-half of the pin length for Types B, D, E, and G grooved pins. For groove lengths not shown, use expanded diameters given for the next longer tabulated groove length.

(2) Non-stock items — not recommended for new design.

Copyright ASME International
Provided by IHS under license with ASME
No reproduction or networking permitted without license from IHS Not for Resale

TABLE 6B EXPANDED DIAMETERS FOR GROOVED PINS MADE FROM CORROSION RESISTANT STEEL AND MONEL

Groove Length [Note (1)]	Nominal Size														
	1/32 [Note (2)]	3/64 [Note (2)]	1/16	5/64 [Note (2)]	3/32	7/64 [Note (2)]	1/8	5/32	3/16	7/32	1/4	5/16	3/8	7/16	1/2
	B, Expanded Pin Diameter														
	± 0.0015				± .002		± .0025					± 0.003			
0.125	0.034	0.050	0.066	0.082	0.099	0.115	0.132								
0.188	0.034	0.050	0.066	0.082	0.099	0.115	0.132	0.164	0.195						
0.250	0.034	0.050	0.066	0.082	0.099	0.115	0.132	0.164	0.195	0.227	0.260				
0.312	0.034	0.050	0.066	0.082	0.099	0.115	0.132	0.164	0.195	0.227	0.260	0.325			
0.375	0.034	0.050	0.066	0.082	0.099	0.115	0.132	0.164	0.195	0.227	0.260	0.325	0.389		
0.438	0.034	0.050	0.066	0.082	0.099	0.115	0.132	0.164	0.195	0.227	0.260	0.325	0.389	0.453	
0.500	0.034	0.050	0.066	0.082	0.099	0.115	0.132	0.164	0.195	0.227	0.260	0.325	0.389	0.453	0.519
0.562		0.050	0.066	0.082	0.099	0.115	0.132	0.164	0.195	0.227	0.260	0.325	0.389	0.453	0.519
0.625		0.050	0.066	0.082	0.099	0.115	0.132	0.164	0.195	0.227	0.260	0.325	0.389	0.453	0.519
0.750			0.065	0.081	0.098	0.114	0.132	0.164	0.195	0.227	0.260	0.325	0.389	0.453	0.519
0.875			0.065	0.081	0.098	0.114	0.131	0.163	0.195	0.227	0.260	0.325	0.389	0.453	0.519
1.000			0.065	0.081	0.098	0.113	0.131	0.163	0.195	0.227	0.260	0.325	0.389	0.453	0.519
1.125					0.098	0.113	0.130	0.162	0.194	0.227	0.260	0.325	0.389	0.453	0.519
1.250							0.130	0.162	0.194	0.227	0.260	0.325	0.389	0.453	0.519
1.375							0.130	0.162	0.194	0.226	0.259	0.325	0.389	0.453	0.519
1.500							0.130	0.162	0.194	0.226	0.259	0.325	0.389	0.453	0.519
1.625								0.161	0.194	0.226	0.259	0.324	0.388	0.453	0.519
1.750								0.161	0.194	0.226	0.259	0.324	0.388	0.453	0.519
1.875								0.161	0.193	0.226	0.259	0.324	0.388	0.452	0.519
2.000								0.161	0.193	0.226	0.259	0.324	0.388	0.452	0.519
2.125									0.193	0.226	0.259	0.324	0.388	0.452	0.518
2.250									0.193	0.226	0.259	0.324	0.388	0.452	0.518
2.500										0.225	0.258	0.323	0.388	0.452	0.518
2.750										0.225	0.258	0.323	0.388	0.452	0.518
3.000										0.224	0.257	0.323	0.387	0.451	0.517
3.250											0.257	0.322	0.387	0.451	0.517
3.500												0.322	0.387	0.450	0.516
3.750													0.387	0.450	0.516
4.000													0.386	0.449	0.515
4.250													0.386	0.449	0.515
4.500														0.448	0.514

GENERAL NOTE: For expanded diameters applicable to pins made from low carbon or alloy steel, see Table 6A.

NOTES:

(1) Groove length shall be considered as being substantially equal to the pin length for Types A, C, and F grooved pins, and equal to one-half of the pin length for Types B, D, E, and G grooved pins. For groove lengths not shown, use expanded diameters given for the next longer tabulated groove length.

(2) Non-stock items — not recommended for new design.

Copyright ASME International
Provided by IHS under license with ASME
No reproduction or networking permitted without license from IHS

Not for Resale

TABLE 6C STANDARD SIZES AND LENGTHS OF GROOVED PINS [Note (1)]

Nominal Length	Nominal Size										
	1/16	3/32	1/8	5/32	3/16	7/32	1/4	5/16	3/8	7/16	1/2
1/8	Y										
1/4	Y	Y	Y								
3/8	Y	X	X	X	X						
1/2	Y	X	X	X	X	X	X				
5/8	Y	X	X	X	X	X	X	X			
3/4	Y	X	X	X	X	X	X	X	X		
7/8	Y	X	X	X	X	X	X	X	X	X	
1	Y	X	X	X	X	X	X	X	X	X	X
1 1/4		X	X	X	X	X	X	X	X	X	X
1 1/2			X	X	X	X	X	X	X	X	X
1 3/4				X	X	X	X	X	X	X	X
2				X	X	X	X	X	X	X	X
2 1/4					X	X	X	X	X	X	X
2 1/2						X	X	X	X	X	X
2 3/4						X	X	X	X	X	X
3						X	X	X	X	X	X
3 1/4							X	X	X	X	X
3 1/2								X	X	X	X
3 3/4									X	X	X
4									X	X	X
4 1/4									X	X	X
4 1/2										X	X

NOTE:
(1) Pins made from carbon steel are normally available as indicated above, where X designates all types of pins and Y designates all types except Type G. For other size-length combinations and materials, manufacturers should be consulted.

7.9.1 Corrosion Protection. Unless otherwise specified, low carbon steel pins and drive studs shall have a flash plating of zinc to provide interim corrosion protection and products of other materials shall be furnished with a natural (as processed) finish, unplated or uncoated. Other finishes where required, shall be subject to agreement between the manufacturer and purchaser.

7.9.2 Relief from Hydrogen Embrittlement. Where a corrosion preventative finish applied to hardened carbon or alloy steel pins is such that it might produce hydrogen embrittlement, the pins shall be baked for a suitable time at a temperature that will obviate such embrittlement. Baking shall be accomplished as soon as possible following the plating or coating operation inasmuch as delay is detrimental to achieving the desired result.

7.10 Workmanship

Grooved pins, drive studs, and T-head cotter pins shall be free from burrs, seams, loose scale, sharp edges, and any other defects affecting their serviceability.

7.11 Designation

7.11.1 Grooved pins, drive studs, and T-head cotter pins shall be designated by the following data, in the sequence shown: Product name (noun first), including type designation for pins; nominal size (number, fraction or decimal equivalent); length (fraction or decimal equivalent); material, including specification or heat

Copyright ASME International
Provided by IHS under license with ASME
No reproduction or networking permitted without license from IHS Not for Resale

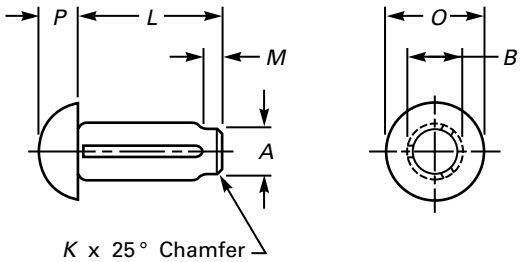

TABLE 7 DIMENSIONS OF ROUND-HEAD GROOVED DRIVE STUDS

Stud Size Number and Basic Shank Diameter [Note (1)]		A Shank Diameter Max.	A Shank Diameter Min.	O Head Diameter Max.	O Head Diameter Min.	P Head Height Max.	P Head Height Min.	B Expanded Diameter ± 0.002 Nominal Stud Length [Note (2)] 1/8	3/16	1/4	5/16	3/8	1/2	5/8	3/4	K Chamfer Min.
0	0.067	0.067	0.065	0.130	0.120	0.050	0.040	0.074	0.074	0.074						0.005
2	0.086	0.086	0.084	0.162	0.146	0.070	0.059	0.096	0.096	0.095						0.005
4	0.104	0.104	0.102	0.211	0.193	0.086	0.075		0.115	0.113	0.113					0.005
6	0.120	0.120	0.118	0.260	0.240	0.103	0.091			0.132	0.130	0.130				0.005
7	0.136	0.136	0.134	0.309	0.287	0.119	0.107				0.147	0.147	0.144			0.005
8	0.144	0.144	0.142	0.309	0.287	0.119	0.107					0.155	0.153	0.153		0.005
10	0.161	0.161	0.159	0.359	0.334	0.136	0.124					0.173	0.171	0.171		0.016
12	0.196	0.196	0.194	0.408	0.382	0.152	0.140						0.206	0.204	0.204	0.016
14	0.221	0.221	0.219	0.457	0.429	0.169	0.156						0.234	0.232	0.232	0.016
16	0.250	0.250	0.248	0.472	0.443	0.174	0.161						0.263			0.016

GENERAL NOTE: For additional requirements and recommended hole sizes refer to General Data for Grooved Pins, also Grooved Drive Studs and Grooved T-Head Cotter Pins on pages 18, 19, 26, and 27.

NOTES:

(1) Where specifying stud size in decimals, zeros preceding decimal and in the fourth decimal place shall be omitted.

(2) Sizes and length, for which B values are tabulated are normally readily available in carbon steel. For other size-length combinations or materials, manufacturers should be consulted.

TABLE 7A PILOT LENGTH DIMENSIONS FOR ROUND-HEAD GROOVED DRIVE STUDS

Nominal Length	Nominal Size 0 Max.	0 Min.	2 Max.	2 Min.	4 Max.	4 Min.	6 Max.	6 Min.	7 Max.	7 Min.	8 Max.	8 Min.	10 Max.	10 Min.	12 Max.	12 Min.	14 Max.	14 Min.	16 Max.	16 Min.
	M, Pilot Length																			
1/8	0.051	0.031	0.051	0.031																
3/16	0.067	0.047	0.067	0.047	0.067	0.047														
1/4	0.082	0.062	0.082	0.062	0.082	0.062	0.082	0.062												
5/16					0.098	0.078	0.098	0.078	0.098	0.078										
3/8					0.114	0.094	0.114	0.094	0.114	0.094	0.114	0.094	0.114	0.094						
1/2									0.14	0.12	0.14	0.12	0.14	0.12	0.14	0.12	0.14	0.12	0.14	0.12
5/8											0.18	0.16	0.18	0.16	0.18	0.16	0.18	0.16		
3/4															0.20	0.18	0.20	0.18		

GENERAL NOTE: To find total pilot length of lengths (L) not shown above, use the next shorter length.

Copyright ASME International
Provided by IHS under license with ASME
No reproduction or networking permitted without license from IHS
Not for Resale

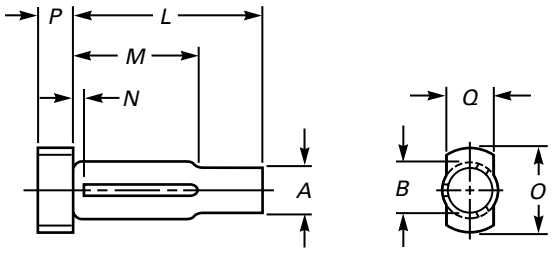

TABLE 8 DIMENSIONS OF GROOVED T-HEAD COTTER PINS [Note (1)]

Nominal Size or Basic Shank Diameter [Note (2)]		A Shank Diameter Max.	A Shank Diameter Min.	B Expanded Shank Diameter Max.	B Expanded Shank Diameter Min.	N Length Max.	O Head Diameter Max.	O Head Diameter Min.	P Head Height Max.	P Head Height Min.	Q Head Width Max.	Q Head Width Min.	Recommended Hole Size Max.	Recommended Hole Size Min.
5/32	0.156	0.154	0.150	0.168	0.163	0.08	0.26	0.24	0.11	0.09	0.18	0.15	0.161	0.156
3/16	0.187	0.186	0.182	0.201	0.195	0.09	0.30	0.28	0.13	0.11	0.22	0.18	0.193	0.187
1/4	0.250	0.248	0.244	0.265	0.258	0.12	0.40	0.38	0.17	0.15	0.28	0.24	0.257	0.250
5/16	0.312	0.310	0.305	0.326	0.320	0.16	0.51	0.48	0.21	0.19	0.34	0.30	0.319	0.312
23/64	0.359	0.358	0.353	0.375	0.369	0.18	0.57	0.54	0.24	0.22	0.38	0.35	0.366	0.359
1/2	0.500	0.498	0.493	0.520	0.514	0.25	0.79	0.76	0.32	0.30	0.54	0.49	0.508	0.500

GENERAL NOTE: For additional requirements refer to General Data for Grooved Pins, also Grooved Drive Studs and Grooved T-Head Cotter Pins on pages 18, 19, 26, and 27.

NOTES:
(1) For groove lengths, M, which vary with pin length, see Table 8A.
(2) Where specifying nominal size in decimals, zeros preceding decimal and in the fourth decimal place shall be omitted.

TABLE 8A GROOVE LENGTH DIMENSIONS FOR GROOVED T-HEAD COTTER PINS

Nominal Length	Nominal Size 5/32 M, Pilot Length [Note (1)] Max.	5/32 Min.	3/16 Max.	3/16 Min.	1/4 Max.	1/4 Min.	5/16 Max.	5/16 Min.	23/64 Max.	23/64 Min.	1/2 Max.	1/2 Min.
3/4	0.50	0.48	0.50	0.48								
7/8	0.50	0.48	0.50	0.48								
1	0.62	0.60	0.62	0.60	0.62	0.60						
1 1/8	0.68	0.66	0.68	0.66	0.68	0.66	0.68	0.66				
1 1/4			0.75	0.73	0.75	0.73	0.75	0.73	0.75	0.73		
1 1/2					0.88	0.86	0.88	0.86	0.88	0.86		
1 3/4							1.00	0.98	1.00	0.98		
2							1.25	1.23	1.25	1.23	1.25	1.23
2 1/4											1.31	1.29
2 1/2											1.50	1.48
2 3/4											1.62	1.60
3											1.85	1.83

NOTE:
(1) Sizes and lengths for which M values are tabulated are normally readily avilable. For other size-length combinations, manufacturers should be consulted.

Copyright ASME International
Provided by IHS under license with ASME
No reproduction or networking permitted without license from IHS Not for Resale

treatment where necessary; protective finish, if required. See the following examples:

Pin, Type A Grooved, 3/32 × 3/4, Steel, Zinc Plated

Pin, Type F Grooved, .250 × 1.500, Corrosion Resistant Steel

Drive Stud, Round Head Grooved, No. 10 × 1/2, Steel, Zinc Plated

Pin, Grooved T-Head Cotter, 1/4 × 1 1/4, Steel, Zinc Plated

7.11.2 For a recommended part identifying numbering system (PIN), see ASME B18.24.3.

8 GENERAL DATA FOR SPRING PINS

8.1 Diameter

8.1.1. Slotted Type. Due to the manufacturing process, the outer periphery of slotted-type spring pins in the free state deviates somewhat from true round. Therefore, conformance with the specified maximum diameter limits shall be checked with GO ring gages. The length of the hole in the ring gage shall be 0.125 in. The minimum diameter shall be determined by averaging three measurements taken at successive 45 deg intervals away from the center of slot. These measurements shall be made at approximately the center of pins 1 in. or shorter nominal length, and at a distance of 0.25 in. from the end of pins having longer nominal lengths.

8.1.2 Coiled Type. Due to the manufacturing process, the outer periphery of coiled-type spring pins somewhat deviates from true round. Suppliers may use measurement techniques for minimum and maximum diameter inspection as they deem appropriate. However, for diameter arbitration between the supplier and purchaser, the specified minimum and maximum diameter limits shall be determined with GO and NO GO plain ring gages, respectively. The length of the hole in the ring gage shall be .125 in.

8.2 Slots

The dimension and end configuration of the circumference of slotted-type pins shall be such that pins, in the free state, will not interlock and that sides of the slot will not touch on 9/64 (0.141) in. and larger sizes when the pin is inserted into a minimum hole size within a tolerance of ±0.0003 in. All sizes smaller than 9/64 (0.141) in. shall assemble satisfactorily into the minimum hole and the sides of the slot may touch. The edges of the slot intersecting the pin diameter shall be broken or rounded.

8.3 Ends

Both ends of all spring pins shall be chamfered as depicted in the figures and specified in the dimensional tables. The contour of the chamfer shall be optional.

8.4 Length

8.4.1 Measurement. The length of spring pins shall be measured overall from end to end, parallel to the pin axis.

8.4.2 Tolerance on Length. The tolerance on the length of spring pins shall be as tabulated here for the respective types:

Pin Type	Slotted	Coiled	
Nominal Pin Size	1/16 thru 3/4	1/32 thru 3/8	7/16 thru 3/4
Nominal Pin Length	Tolerance on Length		
Up to 1 in., Incl.	±0.015	±0.010	±0.025
Over 1 to 2 in., Incl.	±0.020	±0.010	±0.025
Over 2 to 3 in., Incl.	±0.025	±0.015	±0.025
Over 3 to 4 in., Incl.	±0.030	±0.025	±0.025
Over 4 in.	±0.035	±0.025	±0.025

8.4.3 Practical Lengths. The diameter-length combinations in which spring pins are normally readily available are depicted in Table 9. Manufacturers should be consulted concerning the availability of other size-length combinations in the various types, series, and materials.

8.4.4 Straightness. The straightness over the length of spring pins shall be such that pins will pass freely through a ring gage of length as tabulated at the end of this subparagraph for the respective pin lengths. The maximum diameter of the gaging hole shall be equivalent to the maximum pin free diameter for the respective pin types and series, given in Tables 10 and 11, plus the straightness diameter allowance tabulated in the following:

Copyright ASME International
Provided by IHS under license with ASME
No reproduction or networking permitted without license from IHS

Not for Resale

TABLE 9 PRACTICAL SIZES AND LENGTHS OF COILED- AND SLOTTED-TYPE SPRING PINS

Nominal Length	Nominal Size																			
	1/32	0.039	3/64	0.052	1/16	5/64	3/32	7/64	1/8	9/64	5/32	3/16	7/32	1/4	5/16	3/8	7/16	1/2	5/8	3/4
1/8	Y	Y	Y	X																
3/16	Y	Y	Y	X	X	X	X													
1/4	Y	Y	Y	X	X	X	X	X												
5/16	Y	Y	Y	X	X	X	X	X	X											
3/8	Y	Y	Y	X	X	X	X	X	X	X										
7/16	Y	Y	Y	X	X	X	X	X	X	X	X									
1/2	Y	Y	Y	X	X	X	X	X	X	X	X	X	X	X						
9/16	Y	Y	Y	X	X	X	X	X	X	X	X	X	X	X						
5/8	Y	Y	Y	X	X	X	X	X	X	X	X	X	X	X						
11/16					X	X	X	X	X	X	X	X	X	X						
3/4					X	X	X	X	X	X	X	X	X	X	X	X				
13/16					X	X	X	X	X	X	X	X	X	X	X					
7/8					X	X	X	X	X	X	X	X	X	X	X	X				
15/16					X	X	X	X	X	X	X	X	X	X	X					
1					X	X	X	X	X	X	X	X	X	X	X	X	X			
1 1/8						X	X	X	X	X	X	X	X	X	X					
1 1/4						X	X	X	X	X	X	X	X	X	X	X	X	X		
1 3/8						X	X	X	X	X	X	X	X	X						
1 1/2						X	X	X	X	X	X	X	X	X	X	X	X	X		
1 5/8								X	X	X	X	X	X	X	X					
1 3/4								X	X	X	X	X	X	X	X	X	X	X		
1 7/8									X	X	X	X	X	X	X					
2									X	X	X	X	X	X	X	X	X	X	X	X
2 1/4											X	X	X	X	X	X	X	X	X	X
2 1/2											X	X	X	X	X	X	X	X	X	X
2 3/4													X	X	X	X	X	X	X	X
3													X	X	X	X	X	X	X	X
3 1/4														X	X	X	X	X	X	X
3 1/2														X	X	X	X	X	X	X
3 3/4															X	X	X	X	X	X
4															X	X	X	X	X	X
4 1/4																			X	X
4 1/2																			X	X
4 3/4																			X	X
5																			X	X
5 1/4																			X	X
5 1/2																			X	X
5 3/4																			X	X
6																			X	X

GENERAL NOTES:
(a) X indicates availability of both coiled- and slotted-type spring pins
(b) Y indicates availability of standard duty coiled pins only.
(c) Suppliers should be consulted regarding availability of other sizes, lengths, or materials.

Copyright ASME International
Provided by IHS under license with ASME
No reproduction or networking permitted without license from IHS Not for Resale

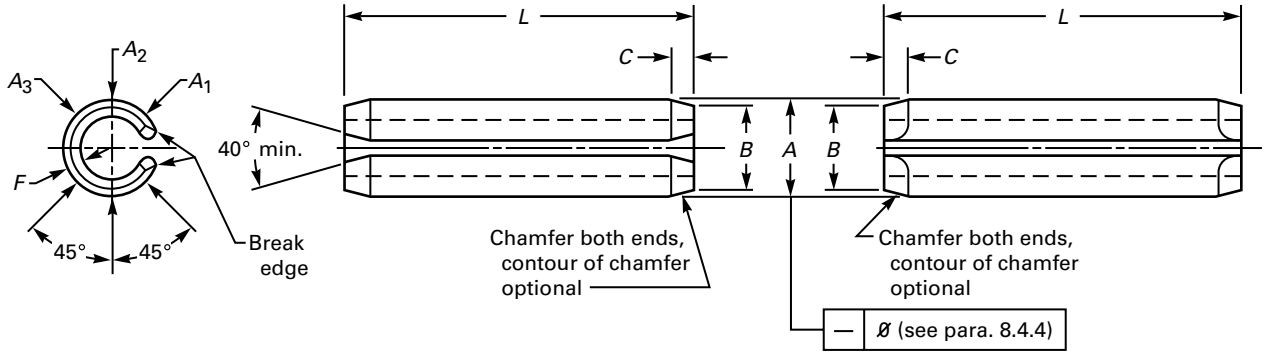

Optional Constructions

TABLE 10 DIMENSIONS OF SLOTTED-TYPE SPRING PINS

Nominal Size of Basic Pin Diameter [Note (1)]	A		B	C		F			Double Shear Load, Min., lb		
	Pin Diameter		Chamfer Diameter	Chamfer Length		Stock Thickness	Recommended Hole Size		Material		
	Max. [Note (2)]	Min. [Note (3)]	Max.	Max.	Min.	Basic	Max.	Min.	SAE 1070–1095 and SAE 51420 [Note (4)]	SAE 30302 and 30304	Beryllium Copper
1/16 0.062	0.069	0.066	0.059	0.028	0.007	0.012	0.065	0.062	430	250	270
5/64 0.078	0.086	0.083	0.075	0.032	0.008	0.018	0.081	0.078	800	460	500
3/32 0.094	0.103	0.099	0.091	0.038	0.008	0.022	0.097	0.094	1,150	670	710
1/8 0.125	0.135	0.131	0.122	0.044	0.008	0.028	0.129	0.125	1,875	1,090	1,170
9/64 0.141	0.149	0.145	0.137	0.044	0.008	0.028	0.144	0.140	2,175	1,260	1,350
5/32 0.156	0.167	0.162	0.151	0.048	0.010	0.032	0.160	0.156	2,750	1,600	1,725
3/16 0.188	0.199	0.194	0.182	0.055	0.011	0.040	0.192	0.187	4,150	2,425	2,600
7/32 0.219	0.232	0.226	0.214	0.065	0.011	0.048	0.224	0.219	5,850	3,400	3,650
1/4 0.250	0.264	0.258	0.245	0.065	0.012	0.048	0.256	0.250	7,050	4,100	4,400
5/16 0.312	0.330	0.321	0.306	0.080	0.014	0.062	0.318	0.312	10,800	6,300	6,750
3/8 0.375	0.395	0.385	0.368	0.095	0.016	0.077	0.382	0.375	16,300	9,500	10,200
7/16 0.438	0.459	0.448	0.430	0.095	0.017	0.077	0.445	0.437	19,800	11,500	12,300
1/2 0.500	0.524	0.513	0.485	0.110	0.025	0.094	0.510	0.500	27,100	15,800	17,000
5/8 0.625	0.653	0.640	0.608	0.125	0.030	0.125	0.636	0.625	46,000	18,800	. . .
3/4 0.750	0.784	0.769	0.730	0.150	0.030	0.150	0.764	0.750	66,000	23,200	. . .

GENERAL NOTE: For additional requirements refer to General Data for Spring Pins on pages 27, 29, and 30.

CHARACTERISTICS	SYMBOL
Straightness	–
Diameter	ø

NOTES:
(1) Where specifying nominal size in decimals, zeros preceding the decimal shall be omitted.
(2) Maximum diameter shall be checked by GO ring gage.
(3) Minimum diameter shall be average of three diameters measured at points illustrated A min $= \frac{A_1 + A_2 + A_3}{3}$.
(4) Sizes 5/8 in. (0.625) and larger are produced from SAE 6150H alloy steel, not SAE 1070-1095.

Copyright ASME International
Provided by IHS under license with ASME
No reproduction or networking permitted without license from IHS
Not for Resale

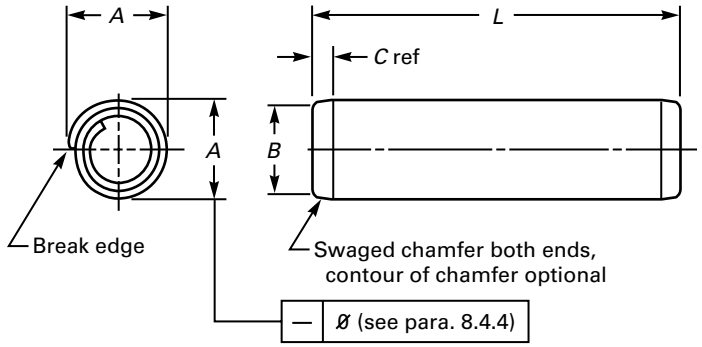

TABLE 11 DIMENSIONS OF COILED-TYPE SPRING PINS

Nominal Size or Basic Pin Diameter [Note (1)]	A						B	C			Double Shear Load, Min., lb					
	Pin Diameter						Chamfer		Recommended Hole Size		Standard Duty		Heavy Duty		Light Duty	
											Material					
	Standard Duty		Heavy Duty		Light Duty		Dia.	Length			SAE 1070–1095 and SAE 51420 [Notes (4), (5)]	SAE 30302 and 30304	SAE 1070–1095 and SAE 51420 [Note (5)]	SAE 30302 and 30304	SAE 1070–1095 and SAE 51420	SAE 30302 and 30304
	Max. [Note (2)]	Min. [Note (3)]	Max. [Note (2)]	Min. [Note (3)]	Max. [Note (2)]	Min. [Note (3)]	Max.	Ref.	Max.	Min.						
1/32 0.031	0.035	0.033	...	...	...	...	0.029	0.024	0.032	0.031	90	65	...	...	...	...
0.039	0.044	0.041	...	...	...	...	0.037	0.024	0.040	0.039	135	100	...	...	...	...
3/64 0.047	0.052	0.049	...	...	...	...	0.045	0.024	0.048	0.047	190	145	...	...	...	...
0.052	0.057	0.054	...	...	...	...	0.050	0.024	0.053	0.051	250	190	...	...	...	...
1/16 0.062	0.072	0.067	0.070	0.066	0.073	0.067	0.059	0.028	0.065	0.061	330	265	475	360	205	160
5/64 0.078	0.088	0.083	0.086	0.082	0.089	0.083	0.075	0.032	0.081	0.077	550	425	800	575	325	250
3/32 0.094	0.105	0.099	0.103	0.098	0.106	0.099	0.091	0.038	0.097	0.093	775	600	1,150	825	475	360
7/64 0.109	0.120	0.114	0.118	0.113	0.121	0.114	0.106	0.038	0.112	0.108	1,050	825	1,500	1,150	650	500
1/8 0.125	0.138	0.131	0.136	0.130	0.139	0.131	0.121	0.044	0.129	0.124	1,400	1,100	2,000	1,700	825	650
5/32 0.156	0.171	0.163	0.168	0.161	0.172	0.163	0.152	0.048	0.160	0.155	2,200	1,700	3,100	2,400	1,300	1,000
3/16 0.188	0.205	0.196	0.202	0.194	0.207	0.196	0.182	0.055	0.192	0.185	3,150	2,400	4,500	3,500	1,900	1,450
7/32 0.219	0.238	0.228	0.235	0.226	0.240	0.228	0.214	0.065	0.224	0.217	4,200	3,300	5,900	4,600	2,600	2,000
1/4 0.250	0.271	0.260	0.268	0.258	0.273	0.260	0.243	0.065	0.256	0.247	5,500	4,300	7,800	6,200	3,300	2,600
5/16 0.312	0.337	0.324	0.334	0.322	0.339	0.324	0.304	0.080	0.319	0.308	8,700	6,700	12,000	9,300	5,200	4,000
3/8 0.375	0.403	0.388	0.400	0.386	0.405	0.388	0.366	0.095	0.383	0.370	12,600	9,600	18,000	14,000	...	...
7/16 0.438	0.469	0.452	0.466	0.450	0.471	0.452	0.427	0.095	0.446	0.431	17,000	13,300	23,500	18,000	...	...
1/2 0.500	0.535	0.516	0.532	0.514	0.537	0.516	0.488	0.110	0.510	0.493	22,500	17,500	32,000	25,000	...	...
5/8 0.625	0.661	0.642	0.658	0.640	...	...	0.613	0.125	0.635	0.618	35,000	...	48,000	...	...	...
3/4 0.750	0.787	0.768	0.784	0.766	...	...	0.738	0.150	0.760	0.743	50,000	...	70,000	...	...	...

GENERAL NOTES:
(a) For additional requirements refer to General Data for Spring Pins on pages 27, 29, and 30.
(b) Light-duty SAE 1070 and 1075 pins are not produced in diameters smaller than 3/32 in.

CHARACTERISTICS	SYMBOL
Straightness	–
Diameter	ø

NOTES:
(1) Where specifying nominal size in decimals, zeros preceding the decimal shall be omitted.
(2) Maximum diameter shall be checked by GO ring gage.
(3) Minimum diameter shall be checked by NO GO ring gage.
(4) Sizes 1/32 in. (0.031) through 0.052 in. are not available in SAE 1070-1095 carbon steel.
(5) Sizes 5/8 in. (0.625) and larger are produced from SAE 6150H alloy steel, not SAE 1070-1095 carbon steel.

Copyright ASME International
Provided by IHS under license with ASME
No reproduction or networking permitted without license from IHS Not for Resale

Nominal Pin Length	Gage Length ±0.005	Straightness Diameter Allowance
Up to 1 in., Incl.	1.000	0.007
Over 1 to 2 in., Incl.	2.000	0.010
Over 2 in.	3.000	0.013

8.5 Materials

Spring pins are normally made from SAE 1070–1095 carbon steel, SAE 6150H alloy steel, SAE Types 51410 through 51420 and 30302 and 30304 corrosion resistant steels, and beryllium copper alloy as designated in the respective dimensional tables; heat treated or cold worked to attain the hardness and performance requirements set forth in this Standard. Where required for specific applications, pins may also be made from other materials having chemicals and mechanical properties as agreed upon between the manufacturer and purchaser.

8.6 Hardness

The hardness of the various spring pin types and materials shall conform to the requirements tabulated below.

It is recommended that the Rockwell hardness tests designated for the respective sizes be used in conducting hardness checks. For slotted-type spring pins the hardness readings shall be taken near the midpoint of a longitudinal flat ground on the pin at 180 deg to the slot. For coiled-type spring pins, the pin shall be ground or cut in half along the longitudinal axis and the hardness readings taken on the inside surface of the outer half coil. The Vickers hardness test specimen must be properly mounted to avoid false readings due to pin flexibility.

8.7 Performance Requirements

Spring pins shall be capable of withstanding the minimum double shear loads specified in the dimensional tables for the respective pin types, series, sizes, and materials, when tested in accordance with the double shear testing of pins specified in Appendix B. The holes in the fixtures for testing spring pins shall conform to the nominal size (tolerance H8) of the pin to be tested. Slotted-type spring pins shall be positioned such that the slot is approximately perpendicular to the plane of application of the shear load.

Spring pins which have been sheared at loads exceeding the minimums specified shall exhibit a ductile fracture at the shear point with no longitudinal cracks.

For Slotted-Type Spring Pins

Nominal Pin Size Range	From	1/32	6/63	1/8	5/16
	Thru	1/16	7/64	1/4	3/4
Hardness Test		Vickers	Rockwell 15N	Rockwell A	Rockwell C
Material		Hardness Values			
SAE 1070 to 1095 Steel		458 to 560	83.5 to 86.9	73.6 to 77.4	46 to 53
SAE 6150H Alloy Steel		*	*	*	43 to 51
SAE 51420 Corrosion Resistant Steel		423 to 544	82.0 to 86.4	72.0 to 76.8	43 to 52
SAE 30302 and 30304 Corrosion Resistant Steel		*	*	*	*
Beryllium Copper		354 to 412	78.3 to 81.5	68.4 to 71.5	36 to 42

For Coiled-Type Spring Pins

Stock Thickness Range	Over	0.001	0.010	0.025	0.050
	Thru	0.010	0.025	0.050	0.094
Hardness Test		Vickers	Rockwell 15N	Rockwell A	Rockwell C
Material		Hardness Reading			
SAE 1070 to 1095 Steel		420 to 545	82 to 86.4	72 to 76.8	43 to 52
SAE 6150 H Alloy Steel		. . .	. . .	. . .	43 to 52
SAE 51420 Corrosion Resistant Steel		460 to 560	83.5 to 86.9	73.6 to 77.4	46 to 53
SAE 30302 and 30304 Corrosion Resistant Steel		*	*	*	*

* Work hardened only

8.8 Finishes

Unless otherwise specified, spring pins shall be furnished with a natural (as processed) finish, unplated or uncoated. Where corrosion preventative treatment is required, steel pins may be cadmium or zinc plated or phosphate coated as agreed upon between the manufacturer and the purchaser. However, where a corrosion preventative finish applied to carbon steel or alloy steel spring pins is such that it might produce hydrogen

--`,,`,,`-`-`,,`,,`,`,,`---

Copyright ASME International
Provided by IHS under license with ASME
No reproduction or networking permitted without license from IHS

Not for Resale

embrittlement, the pins shall be baked for a suitable time at a temperature that will obviate such embrittlement. Baking shall be accomplished as soon as possible following the plating or coating operation inasmuch as delay is detrimental to achieving the desired results.

8.9 Workmanship

Spring pins shall be free from burrs, loose scale, seams, notches, sharp edges and corners, and any other defects affecting their serviceability.

8.10 Designation

8.10.1 Spring pins shall be designated by the following data, in the sequence shown: Product name (noun first); nominal size (fraction or decimal equivalent); nominal length (fraction or decimal equivalent); series, for coiled type spring pins; material, including specification where necessary; protective finish, if required. See examples below:

Pin, Coiled Spring, $\frac{1}{4} \times 1\frac{1}{4}$, Standard Duty, Steel, Zinc Plated

Pin, Slotted Spring, .375 × 1.875, SAE 51420 Corrosion Resistant Steel

Pin, Slotted Spring, $\frac{1}{2} \times 3$, Steel, Phosphate Coated

8.10.2 For a recommended part identifying numbering system (PIN), see ASME B18.24.3.

Copyright ASME International
Provided by IHS under license with ASME
No reproduction or networking permitted without license from IHS Not for Resale

--`-`-`-,,`,,`,`,,`---

Copyright ASME International
Provided by IHS under license with ASME
No reproduction or networking permitted without license from IHS
Not for Resale

NONMANDATORY APPENDIX A
RECOMMENDED HOLE SPECIFICATIONS FOR TAPER PINS

The following data and procedures are intended to provide the users of taper pins guidance in the preparation of tapered holes for proper pin installation.

The holes for taper pins are commonly produced by drilling or step drilling, depending on the hole depth (pin length), with suitable diameter drills and reaming with straight fluted taper reamers. The drill steps applicable to the longest standard pin lengths shown in Table A1 are depicted graphically (in Fig. A1) by the dots dividing the slanting lines (respective pin sizes) into equal parts to the nearest 0.25 in. The number of drills and their respective diameters and depths for a given taper pin shall be obtained in accordance with the following procedure.

(1) Determine the depth of hole. (Normally, this shall be equal to the pin length.)

(2) Determine the point where slanting line for respective pin size intersects the hole depth.

(3) The drill diameter of the through hole shall be the next smaller diameter indicated by the horizontal line immediately above this point.

(4) The number of drill steps applicable is indicated by the number of dots appearing within the hole depth. Divide the hole depth on slanting line into corresponding number of equal spaces (to nearest 0.25 in.) to establish step drill depths. Step drill diameters shall be as designated by the horizontal line located immediately above the respective division marks.

For ready reference, the drill diameters and depths applicable to the drill steps shown on the graph are summarized in Table A2.

Example A: For a No. 10 × 6.000 Taper Pin
Use 3 drills (see Fig. A1)
0.5781 diameter drill through
0.6094 diameter drill 4.00 deep
0.6562 diameter drill 2.00 deep

Example B: For a No. 10 × 3.500 Taper Pin
Use 2 drills
0.6250 diameter drill through
0.6719 diameter drill 1.75 deep

It is recommended that detail drawings covering taper pins carry the information, as set forth in Fig. A1,in note form.

Where helically fluted taper reamers are used in lieu of step drilling and straight fluted taper reamers, the diameter at the small end of taper pin shall be the diameter for the through drill. It shall be obtained by multiplying the nominal length by the factor 0.02083 and subtracting the result from the basic pin diameter.

Copyright ASME International
Provided by IHS under license with ASME
No reproduction or networking permitted without license from IHS
Not for Resale

TABLE A1 STEP DRILL SELECTION

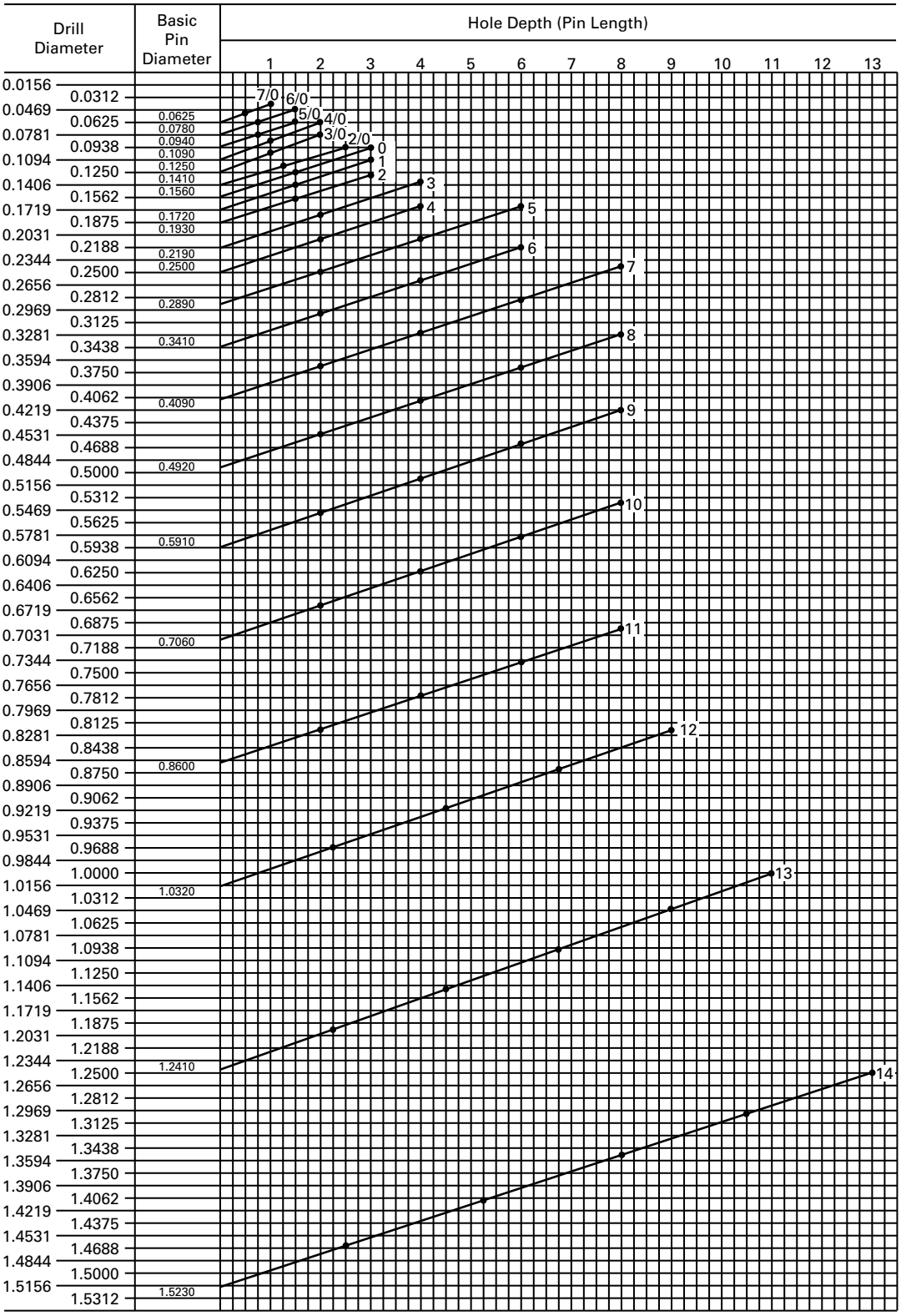

Copyright ASME International
Provided by IHS under license with ASME
No reproduction or networking permitted without license from IHS
Not for Resale

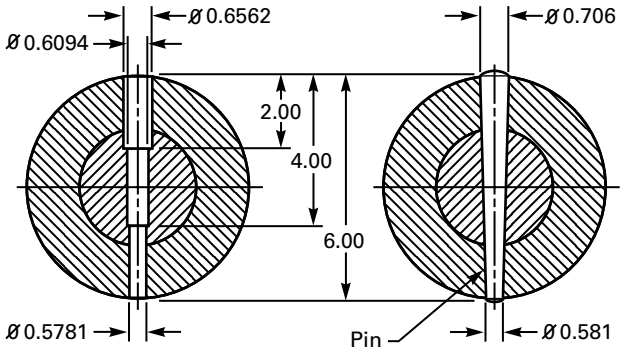

FIG. A1 DRILL DIAMETER EXAMPLES

TABLE A2 DRILL CHART

Pin Size Number	First Drill Through	Second Drill		Third Drill		Fourth Drill		Fifth Drill	
	Diameter	Diameter	Depth	Diameter	Depth	Diameter	Depth	Diameter	Depth
7/0	0.0312	0.0469	0.50						
6/0	0.0312	0.0469	0.75						
5/0	0.0625	0.0781	0.75						
4/0	0.0625	0.0781	1.00						
3/0	0.0781	0.0938	1.00						
2/0	0.0938	0.1094	1.25						
0	0.0938	0.1250	1.50						
1	0.1094	0.1406	1.50						
2	0.1250	0.1562	1.50						
3	0.1250	0.1719	2.00						
4	0.1562	0.2031	2.00						
5	0.1562	0.2031	4.00	0.2344	2.00				
6	0.2188	0.2500	4.00	0.2969	2.00				
7	0.2344	0.2812	6.00	0.3125	4.00	0.3594	2.00		
8	0.3125	0.3594	6.00	0.4062	4.00	0.4375	2.00		
9	0.4219	0.4531	6.00	0.5000	4.00	0.5469	2.00		
10	0.5312	0.5781	6.00	0.6094	4.00	0.6562	2.00		
11	0.6875	0.7344	6.00	0.7812	4.00	0.8125	2.00		
12	0.8438	0.8906	6.25	0.9375	4.50	0.9844	2.25		
13	1.0000	1.0469	9.00	1.0938	6.75	1.1406	4.50	1.1875	2.25
14	1.2500	1.2969	10.50	1.3438	8.00	1.4062	5.25	1.4531	2.50

Copyright ASME International
Provided by IHS under license with ASME
No reproduction or networking permitted without license from IHS
Not for Resale

NONMANDATORY APPENDIX B
DOUBLE SHEAR TESTING OF PINS

The following specifications and procedures are set forth to establish uniformity in the testing of pins in double shear.

The shear test should be performed in a suitable fixture in which the pin support members and the member for applying the shear load have holes for the pin of a diameter conforming to that designated in the General Data for the respective pin type being tested. These members should have a minimum hardness of Rockwell C58, or equivalent. The clearance between the supporting member and the loading member should not exceed 0.005 in. and means for keeping the loading member aligned perpendicular to the axis of pin should be provided. The rate of load application should not exceed 0.50 in. per minute.

The shear planes should be located at a minimum distance equivalent to one pin diameter from each end of pin. The shear planes used may not be closer to each other than 2 pin diameters. Pins of lengths that are too short to be tested in double shear shall be evaluated by testing two pins simultaneously in single shear.

Two typical pin shear test fixtures are illustrated in Fig. B1.

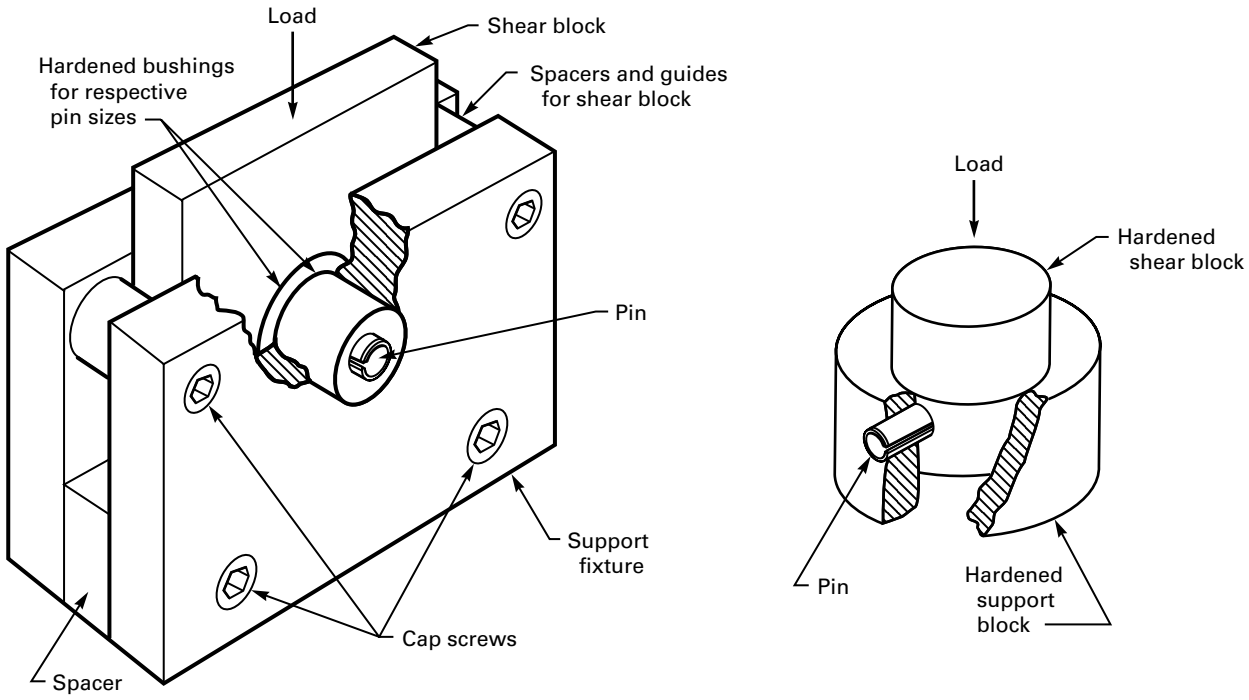

FIG. B1 TYPICAL PIN SHEAR TEST FIXTURES

Copyright ASME International
Provided by IHS under license with ASME
No reproduction or networking permitted without license from IHS
Not for Resale

NONMANDATORY APPENDIX C
TYPE B, C, and D GROOVED PIN DIMENSIONS[1]

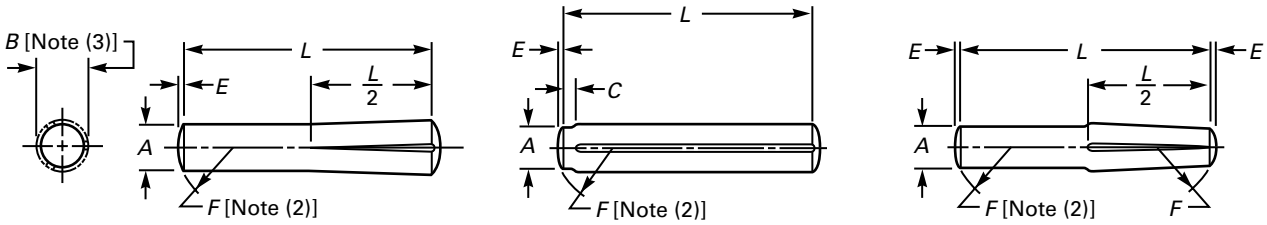

TABLE C1 DIMENSIONS OF GROOVED PINS [Note (3)]

Nominal Size or Basic Pin Diameter [Note (2)]	A		C	D [Note (3)]	E [Note (3)]		F [Note (3)]		G		H		J	K	
	Pin Diameter		Pilot Length	Chamfer Length	Crown Height		Crown Radius		Neck Width		Shoulder Length		Neck Radius	Neck Diameter	
	Max.	Min.	Ref	Min.	Max.	Min.	Max.	Min.	Max.	Min.	Max.	Min.	Ref	Max.	Min.
1/32 0.0312	0.0312	0.0302	0.015	...	...	...	...	...	...	...	...	...	...	...	...
3/64 0.0469	0.0469	0.0459	0.031	...	...	...	...	...	...	...	...	...	...	...	...
1/16 0.0625	0.0625	0.0615	0.031	0.016	0.0115	0.0015	0.088	0.068	...	...	...	...	...	...	...
5/64 0.0781	0.0781	0.0771	0.031	0.016	0.0137	0.0037	0.104	0.084	...	...	...	...	...	...	...
3/32 0.0938	0.0938	0.0928	0.031	0.016	0.0141	0.0041	0.135	0.115	0.038	0.028	0.041	0.031	0.016	0.067	0.057
7/64 0.1094	0.1094	0.1074	0.031	0.016	0.0160	0.0060	0.150	0.130	0.038	0.028	0.041	0.031	0.016	0.082	0.072
1/8 0.1250	0.1250	0.1230	0.031	0.016	0.0180	0.0080	0.166	0.146	0.069	0.059	0.041	0.031	0.031	0.088	0.078
5/32 0.1563	0.1563	0.1543	0.062	0.031	0.0220	0.0120	0.198	0.178	0.069	0.059	0.057	0.047	0.031	0.109	0.099
3/16 0.1875	0.1875	0.1855	0.062	0.031	0.0230	0.0130	0.260	0.240	0.069	0.059	0.,057	0.047	0.031	0.130	0.120
7/32 0.2188	0.2188	0.2168	0.062	0.031	0.0270	0.0170	0.291	0.271	0.101	0.091	0.072	0.062	0.047	0.151	0.141
1/4 0.2500	0.2500	0.2480	0.062	0.031	0.0310	0.0210	0.322	0.302	0.101	0.091	0.072	0.062	0.047	0.172	0.162
5/16 0.3125	0.3125	0.3105	0.094	0.047	0.0390	0.0290	0.385	0.365	0.132	0.122	0.104	0.094	0.062	0.214	0.204
3/8 0.3750	0.3750	0.3730	0.094	0.047	0.0440	0.0340	0.479	0.459	0.132	0.122	0.135	0.125	0.062	0.255	0.245
7/16 0.4375	0.4375	0.4355	0.094	0.047	0.0520	0.0420	0.541	0.521	0.195	0.185	0.135	0.125	0.094	0.298	0.288
1/2 0.5000	0.5000	0.4980	0.094	0.047	0.0570	0.0470	0.635	0.615	0.195	0.185	0.135	0.125	0.094	0.317	0.307

GENERAL NOTES:

(a) For additional requirements and recommended hole sizes see General Data for Grooved Pins, also Grooved Drive Studs and Grooved T-Head Cotter Pins on pages 23 – 25.

(b) For expanded diameters applicable to pins made from corrosion resistant steel or monel, see Table 6B; and for pins made from other materials, see Table 6A.

NOTES:

(1) For Types B and D grooved pins having groove lengths equal to 0.125 in. or shorter,the grooves shall be parallel instead of tapered or oval as depicted in the illustrations.

(2) Where specifying nominal size in decimals, zeros preceding decimal and in the fourth decimal place shall be omitted.

(3) Pins in 1/32 and 3/64 in. sizes for any length and all sizes 1/4 in.nominal length, or shorter, are not crowned or chamfered. See para. 7.4 of General Data. Alloy steel pins of all types shall have chamfered ends conforming with Type F pins, included within the pin length.

Copyright ASME International
Provided by IHS under license with ASME
No reproduction or networking permitted without license from IHS
Not for Resale

NONMANDATORY APPENDIX D
CONVERSION TABLE FOR SAE AND UNS MATERIAL SPECIFICATIONS

TABLE D1 CONVERSION TABLE FOR SAE AND UNS MATERIAL SPECIFICATIONS

SAE	UNS	Formerly AISI
SAE 1211	G 12110	AISI 1211
SAE 1212	G 12120	AISI 1212
SAE 1213	G 12130	AISI 1213
SAE 1070	G 10700	AISI 1070
SAE 1095	G 10950	AISI 1095
SAE 6150H	G 6150	AISI 6150H
SAE 30302	G 30200	AISI 302
SAE 30304	G 30400	AISI 304
SAE 51410	G 41000	AISI 410
SAE 51420	G 42000	AISI 420

GENERAL NOTE: See also para. 1.7.

Copyright ASME International
Provided by IHS under license with ASME
No reproduction or networking permitted without license from IHS
Not for Resale

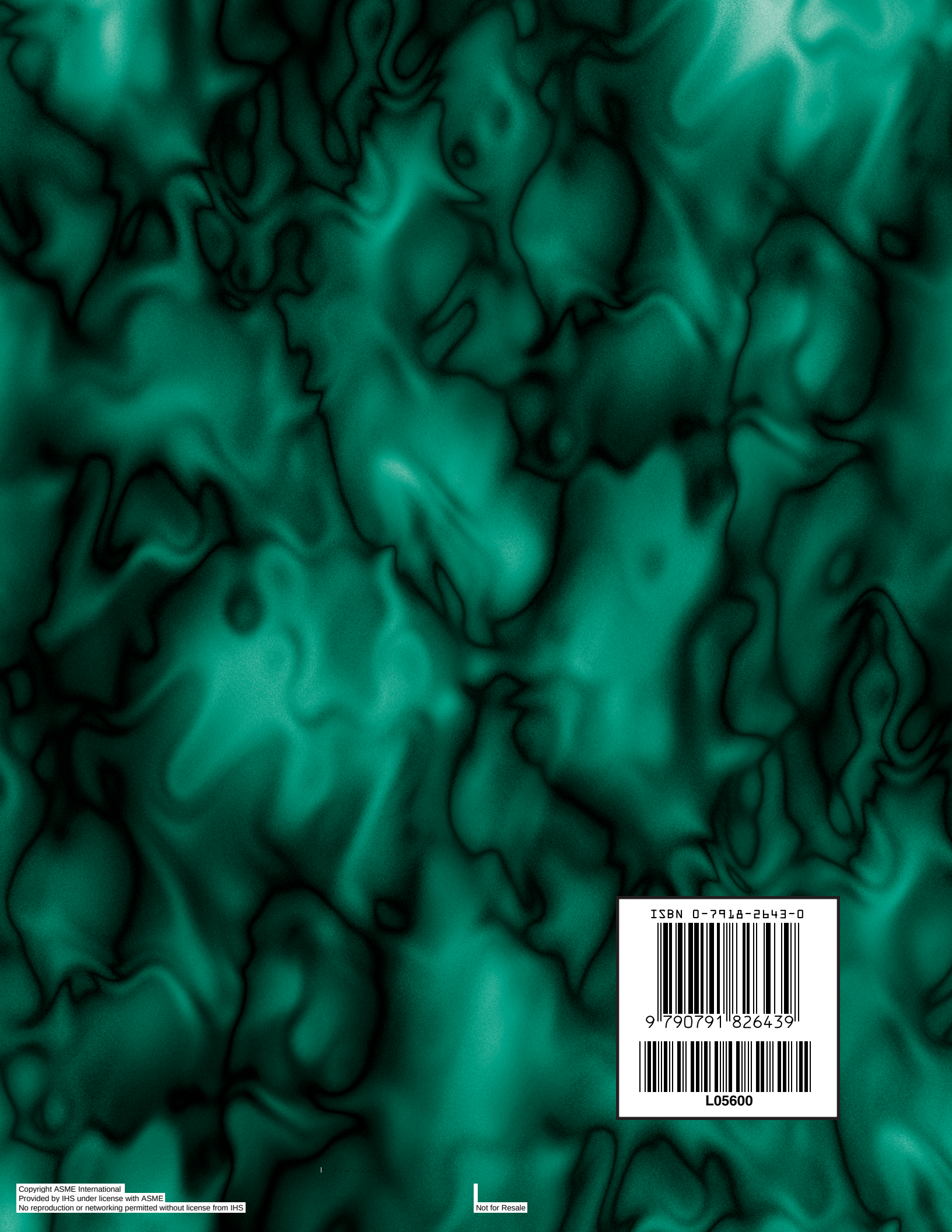

Copyright ASME International
Provided by IHS under license with ASME
No reproduction or networking permitted without license from IHS

Not for Resale