STD.ASME B18.8.100M-ENGL 2001 0759670 0622596 296

ASME B18.8.100M-2000

SPRING PINS: COILED TYPE, SPRING PINS: SLOTTED, MACHINE DOWEL PINS: HARDENED GROUND, AND GROOVED PINS (METRIC SERIES)

Incorporating ASME B18.8.3M, B18.8.4M, B18.8.5M, and B18.8.9M

AN AMERICAN NATIONAL STANDARD

The American Society of Mechanical Engineers

Copyright ASME International
Provided by IHS under license with ASME
No reproduction or networking permitted without license from IHS

Not for Resale

STD.ASME B18.8.100M-ENGL 2001 ■ 0759670 0622597 122 ■



The American Society of Mechanical Engineers

AN AMERICAN NATIONAL STANDARD

SPRING PINS: COILED TYPE, SPRING PINS: SLOTTED, MACHINE DOWEL PINS: HARDENED GROUND, A| GROOVED PINS (METRIC SERIES)

Incorporating ASME B18.8.3M, B18.8.4M, B18.8.5M, and B18.8.9M

ASME B18.8.100M-2000

Copyright ASME International
Provided by IHS under license with ASME
No reproduction or networking permitted without license from IHS

Not for Resale

Date of Issuance: May 10, 2001

The 2000 edition of this Standard is being issued with an automatic addenda subscription service. The use of an addenda allows revisions made in response to public review comments or committee actions to be published as necessary. The next edition of this Standard is scheduled for publication in 2003.

ASME issues written replies to inquiries concerning interpretations of technical aspects of this Standard. The interpretations will be included with the above addenda service.

ASME is the registered trademark of The American Society of Mechanical Engineers.

This code or standard was developed under procedures accredited as meeting the criteria for American National Standards. The Standards Committee that approved the code or standard was balanced to assure that individuals from competent and concerned interests have had an opportunity to participate. The proposed code or standard was made available for public review and comment that provides an opportunity for additional public input from industry, academia, regulatory agencies, and the public-at-large.

ASME does not "approve," "rate," or "endorse" any item, construction, proprietary device, or activity.

ASME does not take any position with respect to the validity of any patent rights asserted in connection with any items mentioned in this document, and does not undertake to insure anyone utilizing a standard against liability for infringement of any applicable letters patent, nor assumes any such liability. Users of a code or standard are expressly advised that determination of the validity of any such patent rights, and the risk of infringement of such rights, is entirely their own responsibility.

Participation by federal agency representative(s) or person(s) affiliated with industry is not to be interpreted as government or industry endorsement of this code or standard.

ASME accepts responsibility for only those interpretations issued in accordance with governing ASME procedures and policies which preclude the issuance of interpretations by individual volunteers.

No part of this document may be reproduced in any form,
in an electronic retrieval system or otherwise,
without the prior written permission of the publisher.

The American Society of Mechanical Engineers
Three Park Avenue, New York, NY 10016-5990

Copyright © 2001 by
THE AMERICAN SOCIETY OF MECHANICAL ENGINEERS
All Rights Reserved
Printed in U.S.A.

Copyright ASME International
Provided by IHS under license with ASME
No reproduction or networking permitted without license from IHS

Not for Resale

FOREWORD

The need for a standard covering machine pins was recognized by industry as far back as March, 1926, when the Sectional Committee on the Standardization of Machine Pins was organized under the procedure of the American Standards Association (later the United States of America Standards Institute and as of October 6, 1969, the American National Standards Institute, Inc.), with the Society of Automotive Engineers and the American Society of Mechanical Engineers as joint sponsors.

For the next year or two, an effort was made via correspondance to develop a basis on which a standard for straight, taper, split, and dowel pins might be established. This correspondence developed a distinct difference of opinion on the part of the manufacturers and users of taper machine pins, which fact seemed to discourage the members of the committee from attempting standardization on any of the types of pins within its scope. The sponsor organizations made frequent efforts to revive this project through letters and the distribution of technical literature on this general subject, without avail.

In December, 1941, in its periodic review of standards projects for which the Society is sponsor, the ASME Standardization Committee decided that there was little hope for reviving this project and voted, subject to acceptance by the sponsors, to suggest to the ASA the transfer of this project to Sectional Commitee B5 on the Standardization of Small Tools and Machine Tool Elements. The sponsors agreed and on July 7, 1942, the ASA sanctioned this action and Sectional Committee B43 was discharged and the project was officially transferred to Sectional Committee B5.

At its meeting in December, 1942, Sectional Committee B5 voted to enlarge its scope to include machine pins. Technical Committee No. 23 was subsequently established and charged with the responsibility for technical content of standards covering machine pins. This group held its first meeting on November 30, 1943, at which time a Subgroup on Correlation and Recommendations was appointed and it was voted to include clevis pins in addition to the other pin types already under consideration. Several drafts were prepared by the subgroup, distributed for critical comment to users, manufacturers, and general interests, and revised and resubmitted for comments. This action finally resulted in acceptance by Technical Committee 23 of a draft dated November, 1945, which was duplicated in printer's proof form, under a date of October, 1946, and distributed to the members of Sectional Committee B5 for letter ballot approval. Subsequent to the approval of the Sectional Committee, the proposal was next approved by the sponsor bodies, and presented to the American Standards Association for approval as an American Standard. This designation was granted on July 7, 1947.

Following the issuance of the standard, it became apparent that the table on cotter pins needed revision. Accordingly, in 1953 a proposed revision was submitted to the Sectional Committee. After attaining Sectional Committee and sponsor approval, this revision was approved by the American Standards Association on July 9, 1954 as ASA B5.20-1954.

In 1956 and 1957, in response to requests from industry, extensive changes were incorporated into a proposed revision. These included revisions to chamfer values and tolerances on straight pins and unhardened ground dowel pins; revisions to under head to hole, pin end dimensions, and hole sizes tolerances on clevis pins; addition of chisel point to cotter pin end styles and the incorporation of coverage on grooved pins. Following

Copyright ASME International
Provided by IHS under license with ASME
No reproduction or networking permitted without license from IHS
Not for Resale

Sectional Committee and sponsor approvals, this revision was adopted by the American Standards Association on March 25, 1958, as ASA B5.20-1958.

Late in 1961, Sectional Committee B5 suggested that Sectional Committee B18 on the standardization of bolts, nuts, rivets, screws, and similar fasteners assume jurisdiction over standards for pins. Recognizing that the bulk of the products covered in the ASA B5.20 standards were fastener rather than machine oriented, this recommendation was supported by the B18 Committee and officially endorsed by the sponsor organizations. Consequently, at the September 14, 1962 meeting of this Committee it was decreed that Subcommittee 23[1] should be formed to undertake a review and updating of the pin standard.

At the initial meeting of Subcommittee 23 held on June 3, 1964, it was decided to add standards for spring pins (inch series) and to establish seven subgroups, each of which would have technical responsibility for specific pin products, and to publish respective products under separate cover as projects were completed.

Over the ensuing several years, work by Subgroups 2, 3, 4, 5, and 6 culminated in the development of a proposal for revision of the standards covering taper, dowel, straight, and grooved pins and including coverage of spring pins (inch series) which was approved by letter ballot of Subcommittee 8 on February 24, 1977. Subsequent to acceptance by American National Standards Committee B18 and the sponsor organizations, this document was duly submitted to the American National Standards Institute for approval as an American National Standard. This was granted on April 5, 1978 and the standard was published under the designation ANSI B18.8.2, superseding in part the coverage provided in ASA B5.20-1958.

ASME B18.8.2 was revised and approved by ANSI on April 5, 1994.

In response to increased user demand as well as to the federally endorsed metrication program, a metric standard was developed for spring pins — coiled type, spring pins — slotted, machine dowel pins — hardened ground, and grooved pins.

In December 1988, Subcommittee 8 proposed B18.8.3M, covering spring pins, coiled type, metric series for B18 Main Committee approval.

In May 1993, Subcommittee 8 proposed B18.8.4M, covering spring pins, slotted, metric series for B18 Main Committee approval.

In May 1993, Subcommittee 8 proposed B18.8.5M, covering hardened ground machine dowel pins, metric series, for B18 Main Committee approval.

In April 1997, Subcommittee 8 submitted proposed standard B18.8.9M, covering grooved pins, metric series, for B18 Main Committee approval.

In April 1999, Subcommittee 8 proposed B18.8.3M, B18.8.4M, B18.8.5M, and B18.8.9M be consolidated into B18.8.100M.

ASME B18.8.100M-2000 was approved by the American National Standards Institute (ANSI) on June 22, 2000.

[1] As of April 1, 1966, Subcommittee 23 was redesignated Subcommittee 8.

Copyright ASME International
Provided by IHS under license with ASME
No reproduction or networking permitted without license from IHS
Not for Resale

ASME B18 STANDARDS COMMITTEE
Standardization of Bolts, Nuts, Rivets, Screws, Washers, and Similar Fasteners

(The following is the roster of the Committee at the time of approval of this Standard.)

OFFICERS

D. A. Clever, *Chair*
R. D. Strong, *Vice Chair*
S. W. Vass, *Vice Chair*
R. L. Crane, *Secretary*

COMMITTEE PERSONNEL

D. R. Akers, *Alternate,* Industrial Fasteners Institute
J. Altman, Rotor Clip Co.
J. B. Belford, Lawson Products, Inc.
J. A. Buda, SPS Technologies, Inc.
R. M. Byrne, Trade Association Management, Inc.
A. P. Cockman, Ford Motor Co.
T. Collier, Cam-Tech Industries, Inc.
A. C. DiCola, Wrought Washer Manufacturing, Inc.
D. L. Drobnich, *Alternate,* Ford Motor Co.
B. A. Dusina, Federal Screw Works
D. S. George, Ford Motor Co.
J. Greenslade, Greenslade & Co.
B. Hasiuk, Defense Industrial Supply Center
A. Herskovitz, U.S. Army
J. Hubbard, Rockford Fastener, Inc.
D. F. Kattler, SPS Technologies
F. W. Kern, Society of Automotive Engineers
J. F. Koehl, Spirol International Corp.
W. H. Kopke, ITW Shakeproof Industrial Products
J. G. Langenstein, Consultant
M. Levinson, ITW Shakeproof Industrial Products
D. Liesche, Benchstock Aero Branch
L. L. Lord, Caterpillar, Inc.
D. B. Mantas, GE — Empis
A. D. McCrindle, Stelco Fasteners, Ltd.
K. E. McCullough, Consultant
R. B. Meade, Camcar Textron
R. F. Novotny, Textron
M. D. Prasad, General Motors Corp.
S. Savoji, ITW Medalist
W. Schevey, BGM Fastener Co., Inc.
J. Slass, *Alternate,* Rotor Clip Co.
J. F. Sullivan, National Fastener Distributors Assoc.
R. L. Tennis, *Alternate,* Caterpillar Inc.
C. B. Wackrow, MNP Corp.
R. G. Weber, Fairfield University
W. K. Wilcox, Consultant
C. J. Wilson, Industrial Fasteners Institute
R. B. Wright, Wright Tool Co.
J. G. Zeratsky, National Rivet & Manufacturing Co.

Copyright ASME International
Provided by IHS under license with ASME
No reproduction or networking permitted without license from IHS
Not for Resale

SUBCOMMITTEE 8 — MACHINE PINS

J. Beshar, *Chair,* Groov-Pin Corp.
B. D. Hamilton, *Vice Chair,* Spirol International
R. L. Crane, *Secretary,* American Society of Mechanical Engineers
A. E. Barry, Standard Lock Washer Co.
D. A. Clever, Deere & Co.
L. E. Hampel, Allied-Locke Industries Inc.
A. Herskovitz, Consultant
D. F. Kattler, Consultant
R. W. Kerr, Kerr Lakeside Inc.
H. H. Koehl, Spirol International
J. F. Koehl, Spirol International
W. H. Kopke, ITW Shakeproof Industrial Products
J. G. Langenstein, Consultant
M. Levinson, ITW Shakeproof Industrial Products
D. B. Mantas, GE — Empis
N. M. Sakatos, Vogelsang Corp.
T. Schaumburg, Driv-Lock Corp.
L. D. Sieper, Precise Products
C. J. Wilson, Industrial Fasteners Institute

Copyright ASME International
Provided by IHS under license with ASME
No reproduction or networking permitted without license from IHS
Not for Resale

CORRESPONDENCE WITH B18 COMMITTEE

General. ASME Standards are developed and maintained with the intent to represent the consensus of concerned interests. As such, users of this Standard may interact with the Committee by requesting interpretations, proposing revisions, and attending Committee meetings. Correspondence should be addressed to:

Secretary, B18 Standards Committee
The American Society of Mechanical Engineers
Three Park Avenue
New York, NY 10016-5990

Proposing Revisions. Revisions are made periodically to the Standard to incorporate changes that appear necessary or desirable, as demonstrated by the experience gained from the application of the Standard. Approved revisions will be published periodically.

The Committee welcomes proposals for revisions to this Standard. Such proposals should be as specific as possible, citing the paragraph number(s), the proposed wording, and a detailed description of the reasons for the proposal, including any pertinent documentation.

Interpretations. Upon request, the B18 Committee will render an interpretation of any requirement of the Standard. Interpretations can only be rendered in response to a written request sent to the Secretary of the B18 Standards Committee.

The request for interpretation should be clear and unambiguous. It is further recommended that the inquirer submit his/her request in the following format:

Subject: Cite the applicable paragraph number(s) and the topic of the inquiry.

Edition: Cite the applicable edition of the Standard for which the interpretation is being requested.

Question: Phrase the question as a request for an interpretation of a specific requirement suitable for general understanding and use, not as a request for an approval of a proprietary design or situation. The inquirer may also include any plans or drawings, which are necessary to explain the question; however, they should not contain proprietary names or information.

Requests that are not in this format will be rewritten in this format by the Committee prior to being answered, which may inadvertently change the intent of the original request.

ASME procedures provide for reconsideration of any interpretation when or if additional information that might affect an interpretation is available. Further, persons aggrieved by an interpretation may appeal to the cognizant ASME Committee or Subcommittee. ASME does not "approve," "certify," "rate," or "endorse" any item, construction, proprietary device, or activity.

Attending Committee Meetings. The B18 Standards Committee regularly holds meetings, which are open to the public. Persons wishing to attend any meeting should contact the Secretary of the B18 Standards Committee.

Copyright ASME International
Provided by IHS under license with ASME
No reproduction or networking permitted without license from IHS
Not for Resale

PREFACE

ORGANIZATION OF THIS DOCUMENT

This Standard compiles the following standards:

Standard	*Title*
ASME B18.8.3M	Spring Pins: Coiled Type (Metric Series)
ASME B18.8.4M	Spring Pins: Slotted (Metric Series)
ASME B18.8.5M	Machine Dowel Pins: Hardened Ground (Metric Series)
ASME B18.8.9M	Grooved Pins (Metric Series)

ADDENDA SERVICE

This edition of ASME B18.8.100M-2000 includes an automatic addenda subscription service up to the publication of the next edition.

Copyright ASME International
Provided by IHS under license with ASME
No reproduction or networking permitted without license from IHS
Not for Resale

CONTENTS

Foreword iii
Standards Committee Roster v
Correspondence With the B18 Committee vii
Preface viii

ASME B18.8.3M Spring Pins: Coiled Type (Metric Series) 1
ASME B18.8.4M Spring Pins: Slotted (Metric Series) 8
ASME B18.8.5M Machine Dowel Pins: Hardened Ground (Metric Series) 16
ASME B18.8.9M Grooved Pins (Metric Series) 23

Copyright ASME International
Provided by IHS under license with ASME
No reproduction or networking permitted without license from IHS
Not for Resale

ASME B18.8.3M-2000

1 Introductory Notes 2

2 General Data for Spring Pins: Coiled Type 4

Tables

1 Dimensions of Coiled Spring Pins 3
2 Practical Sizes and Lengths of Coiled Spring Pins 5
3 Straightness Limits 6
4 Hardness 6

Mandatory Appendix

I Double Shear Testing of Pins 7

Copyright ASME International
Provided by IHS under license with ASME
No reproduction or networking permitted without license from IHS
Not for Resale

SPRING PINS: COILED TYPE (METRIC SERIES)

1 INTRODUCTORY NOTES

1.1 Scope

1.1.1 This Standard covers the dimensional and general data for coiled spring pins recognized as American National Standard, which are widely used in general industrial applications.

1.1.2 The inclusion of dimensional data in this Standard is not intended to imply that all of the products described are stock production sizes. Consumers should consult with suppliers concerning the availability of the product.

1.2 Description

Coiled spring pins shall have straight cylindrical sides with both ends chamfered. They are available in standard duty, heavy duty, and light duty to suit various design requirements. Coiled type spring pins have multiple walls, are spirally wrapped from strip stock to a diameter larger than basic, and are heat treated as necessary or cold worked. Upon installation, the pin diameters contract and the spring reaction against the sides of the hole tends to retain the pin. Dimensions of coiled type spring pins are given in Table 1.

1.3 Dimensions

All dimensions in this Standard are in millimeters unless otherwise noted.

1.4 Options

Options, where specified, shall be at the discretion of the supplier, unless otherwise agreed upon by the supplier and purchaser.

1.5 Terminology

For definitions of terms relating to fasteners or component features thereof used in this Standard, refer to ASME B18.12.

1.6 Comparison With ISO 8748, ISO 8750, and ISO 8751

1.6.1 ISO 8748, ISO 8750, and ISO 8751 were prepared by Technical Committee ISO/TC2 and published in 1987.

1.6.2 ISO 8748 covers the heavy duty, ISO 8750 covers the standard duty, and ISO 8751 covers the light duty. This Standard includes all three duties.

1.6.3 At this time, all three ISO documents cover carbon steel only. This Standard covers the following materials:

(a) 1070–1095 carbon steel (UNS G10700–UNS G10950)

(b) 6150 alloy steel (UNS H61500)

(c) 420 corrosion-resistant steel (UNS S42000)

(d) 302 corrosion-resistant steel (UNS S30200)

The ISO documents detail the chemical elements of the materials, while this Standard identifies the materials using the applicable UNS designation.

1.6.4 The pin hardness in the three ISO documents for carbon steel is listed as 420 to 520 HV. This Standard lists the hardness for carbon steel and alloy steel as 420 to 545 HV. This difference has been called to the attention of the proper ISO committee for resolution.

1.7 Reference Standards

Unless otherwise specified, the referenced standards shall be the most recent issue at the time of order placement.

ASME B18.12, Glossary of Terms for Mechanical Fasteners

ASME B18.18.1M, Inspection and Quality Assurance for General Purpose Fasteners

ASME B18.24.3, Part Identifying Number (PIN) Code System Standard for B18 Nonthreaded Products

Publisher: American Society of Mechanical Engineers (ASME), Three Park Avenue, New York, NY 10016;

Copyright ASME International
Provided by IHS under license with ASME
No reproduction or networking permitted without license from IHS
Not for Resale

Copyright ASME International
Provided by IHS under license with ASME
No reproduction or networking permitted without license from IHS

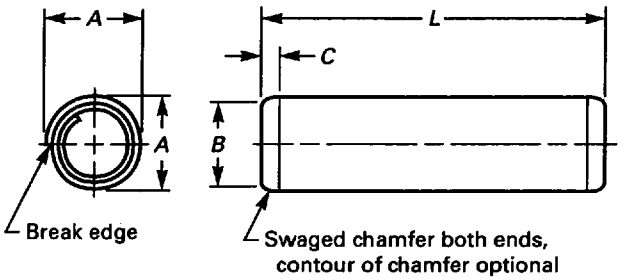

TABLE 1 DIMENSIONS OF COILED SPRING PINS

Nominal Pin Size	A						B	C			Minimum Double Shear, kN					
	Pin Diameter						Chamfer		Recommended Hole Size		Standard Duty		Heavy Duty		Light Duty	
											UNS Material Designation Number					
	Standard Duty		Heavy Duty		Light Duty		Dia.	Length			G 10700 G 10950 S 42000	S 30200	G 10700 G 10950 S 42000	S 30200	G 10700 G 10950 S 42000	S 30200
	Max.	Min.	Max.	Min.	Max.	Min.	Max.	Ref.	Max.	Min.						
0.8	0.91	0.85	...	...	...	...	0.75	0.3	0.84	0.8	0.4(1)	0.3	...	...	...	...
1	1.15	1.05	...	...	...	...	0.95	0.3	1.04	1	0.6(1)	0.45	...	...	...	...
1.2	1.35	1.25	...	...	...	...	1.15	0.4	1.24	1.2	0.9(1)	0.65	...	...	...	...
1.5	1.73	1.62	1.71	1.61	1.75	1.62	1.4	0.5	1.6	1.5	1.45	1.05	1.9	1.45	0.8	0.65
2	2.25	2.13	2.21	2.11	2.28	2.13	1.9	0.7	2.1	2	2.5	1.9	3.5	2.5	1.5	1.1
2.5	2.78	2.65	2.73	2.62	2.82	2.65	2.4	0.7	2.6	2.5	3.9	2.9	5.5	3.8	2.3	1.8
3	3.3	3.15	3.25	3.12	3.35	3.15	2.9	0.9	3.1	3	5.5	4.2	7.6	5.7	3.3	2.5
3.5	3.84	3.67	3.79	3.64	3.87	3.67	3.4	1	3.62	3.5	7.5	5.7	10	7.6	4.5	3.4
4	4.4	4.2	4.3	4.15	4.45	4.2	3.9	1.1	4.12	4	9.6	7.6	13.5	10	5.7	4.4
5	5.5	5.25	5.35	5.15	5.5	5.2	4.85	1.3	5.12	5	15	11.5	20	15.5	9	7
6	6.5	6.25	6.4	6.18	6.55	6.25	5.85	1.5	6.12	6	22	16.8	30	23	13	10
8	8.63	8.3	8.55	8.25	8.65	8.3	7.8	2	8.15	8	39	30	53	41	23	18
10	10.8	10.35	10.65	10.3	...	...	9.75	2.5	10.15	10	62	48	84	64	...	...
12	12.85	12.4	12.75	12.35	...	...	11.7	3.0	12.18	12	89	67	120	91	...	...
14	14.95	14.45	14.85	14.4	...	...	13.6	3.5	14.18	14	120(2)	...	165(2)	...	...	...
16	17	16.45	16.9	16.4	...	...	15.6	4	16.18	16	155(2)	...	210(2)	...	...	...
20	21.1	20.4	21	20.4	...	...	19.6	4.5	20.21	20	250(2)	...	340(2)	...	...	...

NOTES:
(1) Sizes 0.8 through 1.2 are not available in 1070–1095 carbon steel (UNS G 10700 — UNSG 10950.
(2) Sizes 14 and larger are produced from 6150 alloy steel (UNS H 61500), not UNS G 10700 — UNS G 10950.

Not for Resale

Order Department: 22 Law Drive, Box 2300, Fairfield, NJ 07007-2300

ASTM A 967, Specification for Chemical Passivation Treatments for Stainless Steel Parts

Publisher: American Society for Testing and Materials (ASTM), 100 Barr Harbor Drive, West Conshohocken, PA 19428

ISO 8748, Spring-Type Straight Pins — Coiled, Heavy Duty
ISO 8749, Pins and Grooved Pins — Shear Test
ISO 8750, Spring Type Straight Pins — Coiled, Standard Duty
ISO 8751, Spring Type Straight Pins — Coiled, Light Duty

Publisher: International Organization for Standardization (ISO), 1 rue de Varembé, Case Postale 56, CH-1211, Genevè 20, Switzerland/Suisse

2 GENERAL DATA FOR SPRING PINS: COILED TYPE

2.1 Diameter

The nature of the manufacturing process and the overlapping coil cause the outer periphery of coiled type spring pins to deviate from true round. Thus, conformance with specified minimum and maximum diameter limits shall be determined by the use of GO and NO GO plain ring gages, respectively. The length of the hole in the GO ring gage shall not be greater than 3 mm. The full length of the pin shall pass freely through the GO ring gage. Neither end of the pin shall enter the NO GO ring gage beyond the length of the chamfer on the pin.

2.2 Ends

Both ends of coiled spring pins shall be chamfered as shown and specified in Table 1.

2.3 Length

2.3.1 Measurement. The length of coiled spring pins shall be measured overall from end to end, parallel to the axis of the pin.

2.3.2 Tolerance on Length. The tolerance of the length of coiled spring pins shall be as given in the table below.

Nominal Pin Length	Length Tolerance
Up to 10 mm, incl.	±0.25 mm
Over 10 to 50 mm, incl.	±0.5 mm
Over 50 mm	±0.75 mm

2.3.3 Preferred Lengths. The diameter–length combinations in which coiled spring pins are normally available are included in Table 2. Suppliers should be consulted concerning the availability of other diameter–length combinations or various duties and materials.

2.3.4 Straightness. The straightness over the length of coiled spring pins shall be such that pins will pass freely through a ring gage whose length is as tabulated in Table 3 for the respective pin lengths. The diameter of the ring gage holes shall be as specified in Table 3.

2.4 Materials

2.4.1 Coiled spring pins are normally made from 1070–1095 carbon steel (UNS G10700–UNS G10950), 6150 alloy steel (UNS H61500), and 420 and 302 corrosion-resistant steel (UNS S42000 and UNS S30200) as designated in Table 1.

2.4.2 Pins shall be heat treated as necessary or cold worked to meet the mechanical and performance requirements as set forth in this Standard.

2.4.3 Where required for specific applications, pins may also be made from other materials having chemical and mechanical properties as agreed upon between the purchaser and supplier.

2.5 Hardness

The hardness of the coiled spring pins shall conform to the Vickers hardness readings, or equivalent, as listed in Table 4.

2.5.1 Specimen Preparation. Specimen for hardness testing needs to be properly mounted to avoid false readings due to pin flexibility.

2.6 Performance Requirements

Coiled spring pins shall be capable of withstanding the minimum double shear loads specified in Table 1 when tested in accordance with the double shear testing procedure specified in Mandatory Appendix I.

Copyright ASME International
Provided by IHS under license with ASME
No reproduction or networking permitted without license from IHS
Not for Resale

TABLE 2 PRACTICAL SIZES AND LENGTHS OF COILED SPRING PINS

Nominal Length	Nominal Size																
	0.8	1	1.2	1.5	2	2.5	3	3.5	4	5	6	8	10	12	14	16	20
4	x	x	x	x	x												
5	x	x	x	x	x	x											
6	x	x	x	x	x	x	x	x									
8	x	x	x	x	x	x	x	x	x								
10	x	x	x	x	x	x	x	x	x	x							
12	x	x	x	x	x	x	x	x	x	x	x						
14	x	x	x	x	x	x	x	x	x	x	x						
16	x	x	x	x	x	x	x	x	x	x	x	x					
18				x	x	x	x	x	x	x	x	x					
20				x	x	x	x	x	x	x	x	x	x				
22				x	x	x	x	x	x	x	x	x	x				
24				x	x	x	x	x	x	x	x	x	x	x			
26				x	x	x	x	x	x	x	x	x	x	x	x		
28					x	x	x	x	x	x	x	x	x	x	x		
30					x	x	x	x	x	x	x	x	x	x	x		
32					x	x	x	x	x	x	x	x	x	x	x		
35					x	x	x	x	x	x	x	x	x	x	x	x	
40					x	x	x	x	x	x	x	x	x	x	x	x	
45						x	x	x	x	x	x	x	x	x	x	x	x
50							x	x	x	x	x	x	x	x	x	x	x
55									x	x	x	x	x	x	x	x	x
60									x	x	x	x	x	x	x	x	x
65											x	x	x	x	x	x	x
70											x	x	x	x	x	x	x
75											x	x	x	x	x	x	x
80												x	x	x	x	x	x
85												x	x	x	x	x	x
90												x	x	x	x	x	x
95												x	x	x	x	x	x
100												x	x	x	x	x	x
120												x	x	x	x	x	x
140														x	x	x	x
160														x	x	x	x
180															x	x	x
200															x	x	x

GENERAL NOTE: Pins indicated above are normally available in sizes and materials for which double shear strengths are specified in Table 1. Suppliers should be consulted relative to availablility of other sizes, lengths, or materials.

Copyright ASME International
Provided by IHS under license with ASME
No reproduction or networking permitted without license from IHS

Not for Resale

TABLE 3 STRAIGHTNESS LIMITS

	Gage Length		Gage Hole Diameter	
			Specified Maximum Pin Diameter Plus	
Pin Length	Max.	Min.	Max.	Min.
Up to 24, incl.	25.15	24.85	0.2	0.18
Over 24 to 50, incl.	50.15	49.85	0.34	0.3
Over 50	75.15	74.85	0.48	0.42

TABLE 4 HARDNESS

Material	Vickers Hardness
1070–1095 carbon steel (UNS G 10700 — UNS G 10950)	420–545
6150 alloy steel (UNS H 61500)	420–545
420 corrosion resistant steel (UNS S 42000)	458–562
302 corrosion resistant steel (UNS S 30200)	N/A (Work Hardened)

2.7 Finishes

Unless otherwise specified, steel coiled spring pins shall be furnished with a natural (as processed) oiled finish, unplated or uncoated. Where corrosion preventive treatment is required, steel pins may be cadmium or zinc plated or phosphate coated as agreed upon between the supplier and the purchaser. When a corrosion preventive finish applied to carbon steel or alloy steel spring pins is such that it might produce hydrogen embrittlement, the pins shall be baked for a suitable time at a temperature that will obviate such embrittlement in conformance with the pertinent plating or coating specification. Baking shall be accomplished as soon as possible following the plating or coating operation, inasmuch as delay is detrimental to achievement of the desired results.

Other coatings can be supplied as agreed upon between the purchaser and manufacturer.

All tolerances shall apply prior to the application of a plating or coating.

Corrosion-resistant steel coiled spring pins shall be furnished passivated in accordance with ASTM A 967.

2.8 Workmanship

Coiled spring pins shall be free of burrs, loose scale, seams, notches, sharp edges and corners, and other irregularities or detrimental defects which could affect their serviceability.

2.9 Designation

2.9.1 Coiled spring pins shall be designated by the following data, in the sequence shown: product name (noun first), series, nominal diameter, nominal length, duty, material, and finish. See example below.

EXAMPLE:
Pin, Coiled Spring, Metric Series, 6 × 30 Standard Duty, Steel, Plain Finish

2.9.2 For a recommended part identifying numbering system (PIN), see ASME B18.24.3.

2.10 Quality Assurance Program

Unless otherwise specified by the purchaser, acceptability of coiled spring pins shall be based on conformance with the requirements specified in ASME B18.18.1M.

Copyright ASME International
Provided by IHS under license with ASME
No reproduction or networking permitted without license from IHS

Not for Resale

MANDATORY APPENDIX I
DOUBLE SHEAR TESTING OF PINS

The following specifications and procedures are set forth to establish uniformity in the testing of pins in double shear.

The shear test shall be performed in a suitable fixture in which the pin support member and the member for applying the shear load have holes for the pin of a diameter conforming to the nominal hole size for the pin that is to be tested. These members shall have a minimum hardness of 655 HV or equivalent. The clearance between the supporting member and loading member shall not exceed 0.15 mm and means for keeping the member aligned perpendicular to the axis of the pin shall be provided. The rate of load application shall not exceed 13 mm/min.

The shear planes shall be located at a minimum distance equivalent to one pin diameter from each end of the pin and at least two diameters apart. Pins of lengths that are too short to be tested in double shear shall be evaluated by testing two pins simultaneously in single shear.

Pins shall be tested to failure. The maximum load applied to the pin coincident with or prior to pin failure shall be recorded as the double shear strength of the pin. Coiled spring pins which have been sheared at loads exceeding the minimum specified shall exhibit a ductile fracture at the shear plane with no longitudinal cracks. This test method is covered in ISO 8749.

Two typical pin shear test fixtures are illustrated in Fig. I1.

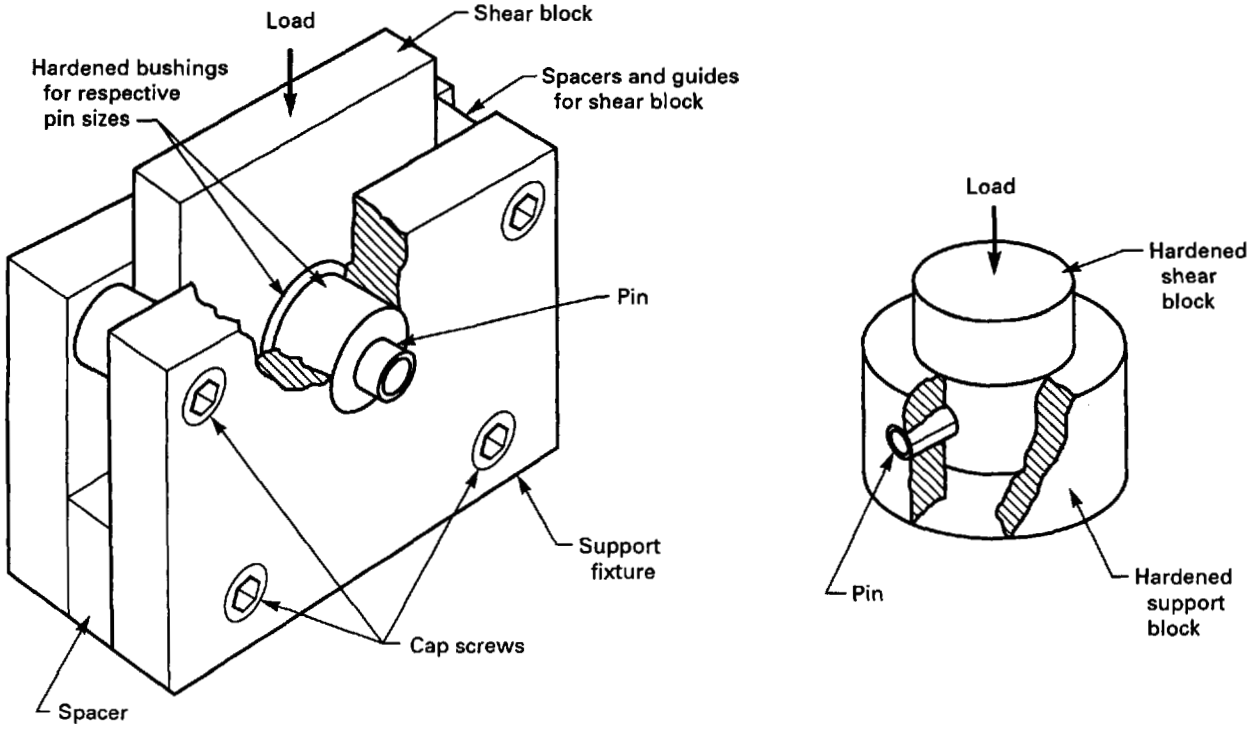

FIG. I1 TYPICAL PIN SHEAR TEST FIXTURES

Copyright ASME International
Provided by IHS under license with ASME
No reproduction or networking permitted without license from IHS
Not for Resale

ASME B18.8.4M-2000

1 General 9

2 Dimensional Characteristics 12

3 Material, Processing, and Mechanical Properties 13

Tables

1 Spring Pin Dimensions 10
2 Recommended Diameter–Length Combinations 11
3 Length Tolerance 12
4 Straightness Test Gage 13
5 Hardness Requirements 14
6 Double Shear Force, kN 14

Mandatory Appendix

I Double Shear Test Method 15

Copyright ASME International
Provided by IHS under license with ASME
No reproduction or networking permitted without license from IHS
Not for Resale

SPRING PINS: SLOTTED (METRIC SERIES)

1 GENERAL

1.1 Scope

1.1.1 This Standard covers the complete dimensions and mechanical and performance requirements for Metric series slotted spring pins recognized as American National Standard, which are widely used in general industrial applications. Slotted spring pins have straight cylindrical sides with both ends chamfered and are formed with a single wall and a slot to accommodate radial compression. Also included is an Appendix providing supplementary information for the testing of pins in double shear.

1.1.2 This Standard defines 1.5–12 mm nominal diameter pins. The 1.5–3 mm diameter pins are defined as Type A, which may interlock in the free state and use the standard ISO installation hole requirements, and Type B, which do not interlock in the free state but require a restricted installation hole tolerance.

1.2 Comparison With ISO 8752

ISO 8752 defines a metric series of pins which differs from this Standard in the following details:

(a) ISO 8752 covers nominal pin diameters 1–50 mm and this Standard covers pin diameters 1.5–12 mm.

(b) ISO 8752 has larger free diameter, so that a fit with greater interference can result. These ASME pins are designed with interference comparable to the inch series ASME B18.8.2 slotted spring pins. Type A pins and 3 mm and larger Type B pins are designed to utilize the standard ISO hole sizes.

(c) The installation hole size requirements are the same in both standards for the 3 mm and larger Type B pins and the Type A 3 mm and smaller sizes. The 3 mm and smaller sizes have two standard types corresponding to the two ISO types and only the Type A pins use the common ISO installation hole diameters. The smaller Type B pins need restricted hole tolerance.

(d) ISO 8752 has a greater hardness range for the carbon or silicon manganese steel (420–560 HV). The ASME hardness range is less, with a minimum of 458 HV.

(e) This Standard includes austenitic and martensitic stainless steels and beryllium copper materials in addition to the carbon steels included in ISO 8752.

(f) The carbon steel double shear strength of B18.8.4M is 20–25% higher than the ISO 8752 minimum requirement. The Type A carbon steel pins have double shear strength equal to ISO 8752.

(g) The ISO 8752 end chamfers are defined by angles with more restrictive length limitations than the ASME ends. The maximum break lengths in this Standard may exceed the ISO by as much as 0.35 mm.

(h) The ISO 8752 and ASME standard length tolerances are stepped at different nominal lengths and vary in magnitude. The maximum difference either way is 0.15 mm.

(i) The ISO 8752 and ASME standard length increments are the same but ISO 8752 lists lengths longer than the ASME 100 mm longest, up to a 200 mm maximum.

(j) ISO 8752 has two types of pins: Type A, with no restrictions on slots, and Type B, which requires noninterlocking slots. ASME Type B must be noninterlocking, but 3 mm and smaller sizes are also offered in Type A, which may interlock.

1.3 Dimensions

All dimensions in this Standard are in given millimeters (mm) and apply before plating unless otherwise specified. Tables 1 and 2 define the dimensions for slotted spring pins.

1.4 Responsibility

The responsible party for the performance of the products within the scope of this Standard is the organization that supplies the components to the purchaser and certifies or represents that the component was manufactured, tested, and inspected in accordance with this specification and meets all of its requirements.

Copyright ASME International
Provided by IHS under license with ASME
No reproduction or networking permitted without license from IHS
Not for Resale

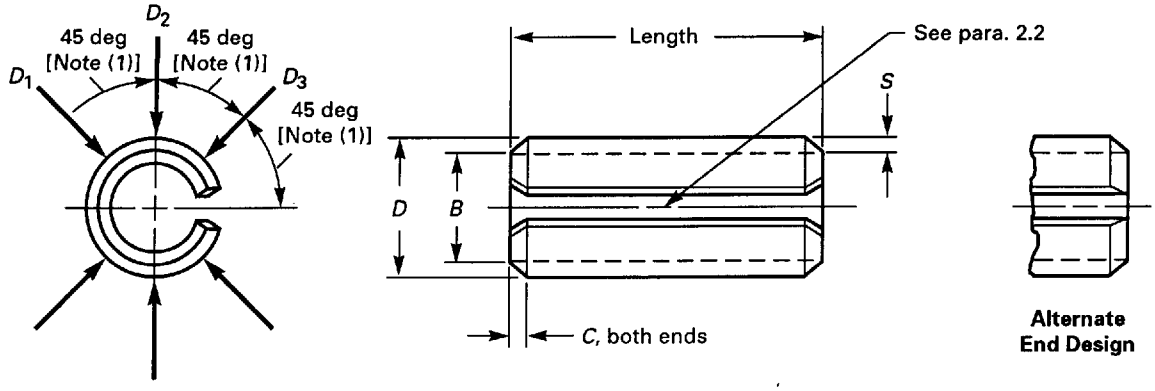

TABLE 1 SPRING PIN DIMENSIONS

Nominal Pin Size	D Diameter Max.	D Diameter Min.	B Chamfer Diameter Max.	C Chamfer Length Max.	C Chamfer Length Min.	S Stock Thickness Nom.	Recommended Hole Size Max.	Recommended Hole Size Min.
Type A								
1.5	1.69	1.62	1.4	0.7	0.15	0.3	1.60	1.50
2	2.20	2.12	1.9	0.8	0.2	0.4	2.10	2.00
2.5	2.72	2.63	2.4	0.9	0.2	0.5	2.60	2.50
3	3.25	3.15	2.9	1.0	0.2	0.6	3.10	3.00
Type B								
1.5	1.66	1.58	1.4	0.7	0.15	0.35	1.56	1.50
2	2.19	2.10	1.9	0.8	0.2	0.45	2.07	2.00
2.5	2.72	2.62	2.4	0.9	0.2	0.55	2.58	2.50
3	3.25	3.14	2.9	1.0	0.2	0.65	3.10	3.00
4	4.30	4.16	3.9	1.2	0.3	0.8	4.12	4.00
5	5.33	5.17	4.8	1.4	0.3	1.0	5.12	5.00
6	6.36	6.18	5.8	1.6	0.4	1.2	6.12	6.00
8	8.45	8.22	7.8	2.0	0.4	1.6	8.15	8.00
10	10.51	10.25	9.7	2.4	0.5	2.0	10.15	10.00
12	12.55	12.28	11.7	2.8	0.6	2.5	12.18	12.00

NOTE:
(1) Measure is approximate.

1.5 Options

Options, where specified, shall be at the discretion of the manufacturer, unless otherwise agreed upon by the manufacturer and purchaser.

1.6 Terminology

For definitions of terms relating to fasteners or component features thereof used in this Standard, refer to ASME B18.12.

1.7 Reference Standards

Unless otherwise specified, the referenced standard shall be the most recent issue at the time of order placement.

ASME B18.8.2, Taper Pins, Dowel Pins, Straight Pins, Grooved Pins, and Spring Pins (Inch Series)
ASME B18.12, Glossary of Terms for Mechanical Fasteners
ASME B18.18.1M, Inspection and Quality Assurance for General Purpose Fasteners

Copyright ASME International
Provided by IHS under license with ASME
No reproduction or networking permitted without license from IHS
Not for Resale

TABLE 2 PREFERRED DIAMETER–LENGTH COMBINATIONS

Nominal Length	Nominal Pin Diameter									
	1.5	2	2.5	3	4	5	6	8	10	12
4	x	x								
5	x	x	x							
6	x	x	x	x						
8	x	x	x	x	x					
10	x	x	x	x	x	x				
12	x	x	x	x	x	x	x			
14(1)	x	x	x	x	x	x	x			
16	x	x	x	x	x	x	x	x		
18(1)	x	x	x	x	x	x	x	x		
20	x	x	x	x	x	x	x	x	x	
22(1)	x	x	x	x	x	x	x	x	x	x
24	x	x	x	x	x	x	x	x	x	x
26	x	x	x	x	x	x	x	x	x	x
28(1)	x	x	x	x	x	x	x	x	x	x
30		x	x	x	x	x	x	x	x	x
32(1)		x	x	x	x	x	x	x	x	x
35		x	x	x	x	x	x	x	x	x
40		x	x	x	x	x	x	x	x	x
45			x	x	x	x	x	x	x	x
50				x	x	x	x	x	x	x
55(1)					x	x	x	x	x	x
60					x	x	x	x	x	x
65(1)							x	x	x	x
70							x	x	x	x
75(1)							x	x	x	x
80								x	x	x
85(1)								x	x	x
90								x	x	x
95(1)								x	x	x
100								x	x	x

NOTE:
(1) Not a preferred length.

Copyright ASME International
Provided by IHS under license with ASME
No reproduction or networking permitted without license from IHS

Not for Resale

STD.ASME B18.8.100M-ENGL 2001 ■ 0759670 0622617 840 ■

ASME B18.24.3, Part Identifying Number (PIN) Code System Standard for B18 Nonthreaded Products

Publisher: American Society of Mechanical Engineers (ASME), Three Park Avenue, New York, NY 10016-5990; Order Department: 22 Law Drive, Box 2300, Fairfield, NJ 07007-2300

ASTM E 18, Standard Test Method for Rockwell Hardness and Rockwell Superficial Hardness of Metallic Materials

ASTM E 92, Test Method for Vickers Hardness of Metallic Materials

Publisher: American Society for Testing and Materials (ASTM), 100 Barr Harbor Drive, West Conshohocken, PA 19428-2959

ISO 8752, Slotted and Spring-Type Straight Pins

Publisher: International Organization for Standardization (ISO), 1 rue de Varembé, Case Postale 56, CH-1211, Genevè 20, Switzerland/Suisse

1.8 Designation

1.8.1 Slotted spring pins conforming to this Standard shall be designated by the folllowing data in the sequence shown:

(a) specification (ANSI/ASME Document) number followed by a dash;

(b) product name (Slotted Spring Pin);

(c) nominal size (diameter in millimeters) of pin;

(d) nominal length in millimeters preceeded by "x";

(e) Type A or Type B if nominal size is 3 mm or smaller;

(f) material, including specification where necessary;

(g) protective finish, if required.

EXAMPLE:
B18.8.4M — Slotted Spring Pin, 6 x 30, AISI 420, Corrosion-Resistant Steel

1.8.2 For a recommended part identifying numbering system (PIN), see ASME B18.24.3.

2 DIMENSIONAL CHARACTERISTICS

2.1 Diameter

Due to the manufacturing process, the outer periphery of slotted spring pins in the free state may deviate somewhat from true round. Therefore, conformance with specified maximum diameter shall be gaged with a GO plain ring gage having a bore equal to the maximum pin diameter with an 0.01 mm minus tolerance and a length or thickness of 2.85–3.15 mm. The minimum pin diameter shall be determined by averaging three measurements taken at successive 45 deg intervals away from the center slot. These measurements shall be made at approximately the center of pins 25 mm or shorter nominal length, and at a distance of 6 mm from the end of pins having longer nominal lengths.

TABLE 3 LENGTH TOLERANCE

Nominal Pin Length	Tolerance, ±
Up to 24, incl.	0.40
Over 24–50	0.50
Over 50–75	0.60
Over 75	0.75

2.2 Slots

The dimensions and end configurations of the slot in the circumference of slotted spring pins shall be such that Type B pins in the free state will not interlock. The sides of the pin slot shall not contact on 4 mm and larger sizes when the pin is inserted into a test hole of a diameter equal to the recommended minimum hole size within a tolerance of ±0.008 mm. The 3 mm size and smaller shall assemble satisfactorily into the minimum test hole and the slot may contact.

2.2 Ends

Both ends of all slotted spring pins shall be chamfered as depicted in the illustrations and specified in the dimensional Table 1. The contour of the chamfer shall be optional.

2.4 Lengths

2.4.1 Measurement. The length of slotted spring pins shall be measured overall from end to end, parallel to the pin axis.

2.4.2 Tolerance on Length. The tolerance of the length of slotted spring pins shall conform to the requirements of Table 3.

2.4.3 Preferred Lengths. The diameter–length combinations in which slotted spring pins are normally available are depicted in Table 2. Suppliers should be consulted concerning the availability of stock production and other diameter–length combinations in the various materials.

Copyright ASME International
Provided by IHS under license with ASME
No reproduction or networking permitted without license from IHS
Not for Resale

TABLE 4 STRAIGHTNESS TEST GAGE

	Gage Length		Gage Hole Diameter Maximum Free Pin Diameter Plus	
Nominal Pin Length	Max.	Min.	Max.	Min.
Up to 24, incl.	25.15	24.85	0.22	0.20
Over 24–50	50.15	49.85	0.43	0.40
Over 50	75.15	74.85	0.64	0.60

2.4.4 Straightness. The straightness over the length of slotted spring pins shall be such that pins will pass freely through a ring gage of the length shown in Table 4. The diameter of the gaging hole shall be equivalent to the maximum free pin diameter for the respective pin plus the allowance in Table 4.

3 MATERIAL, PROCESSING, AND MECHANICAL PROPERTIES

Slotted spring pins shall conform to the following requirements pertaining to materials, processing, mechanical properties, and testing and sampling procedures.

3.1 Materials

Slotted spring pins are normally made from 1070–1095 carbon steel, Types 410–420 and 302 corrosion-resistant steels, and beryllium copper alloy as designated, and are heat treated or cold worked to attain the hardness and performance requirements set forth in this Standard. Where required for specific applications, pins may also be made from other materials having chemical and mechanical properties as agreed upon by the manufacturer and purchaser.

3.2 Hardness

The hardness of the various slotted spring pins shall conform to the requirements of Table 5. The hardness test scales indicated in the table are the recommendation for the pin sizes to be used for product evaluation. The largest indentation which edge distances can accommodate is recommended for hardness evaluation. The hardness readings shall be taken near the midpoint of a longitudinal flat ground on the pin at 180 deg to the slot for A, C, and 15N hardness scales. For microhardness measurements the section mounted shall be generally cut equidistant from the ends of the pin.

3.3 Performance Requirements

Slotted spring pins shall be capable of withstanding the minimum double shear loads specified in Table 6 for the respective size and materials, when tested in accordance with the double shear testing procedure specified in Mandatory Appendix I. The pin slot shall be oriented with the plane containing the slot and pin center line perpendicular to the direction of loading. Spring pins which have been sheared at loads exceeding the minimum specified shall exhibit a ductile fracture at the shear plane with no longitudinal cracks.

3.4 Finishes

Unless otherwise specified, slotted spring pins shall be furnished with a natural (as processed) dry or oiled finish, unplated or uncoated. Where corrosion preventive treatment is required, steel pins may be cadmium or zinc coated as agreed upon by the supplier and the purchaser. When a corrosion preventive finish applied to carbon steel or alloy steel spring pins is such that it might produce hydrogen embrittlement, the pins shall be baked for a suitable time at a temperature that will minimize such hydrogen embrittlement in conformance with the pertinent plating or coating specification. Baking shall be accomplished as soon as possible following the plating or coating operation, inasmuch as delay is detrimental to achievement of the desired results. When post plate dips are required, the baking shall be performed prior to the dipping.

Other coatings can be supplied as agreed upon by the purchaser and manufacturer.

All tolerances shall apply prior to the application of the plating or coating.

When specified by the purchaser, corrosion-resistant steel slotted spring pins shall be furnished passivated in accordance with ASTM A 967.

Beryllium copper slotted spring pins are normally not passivated or oiled.

Copyright ASME International
Provided by IHS under license with ASME
No reproduction or networking permitted without license from IHS

Not for Resale

TABLE 5 HARDNESS REQUIREMENTS

Materials	Nominal Size, Range			
	1–5	2–3	4–6	8–12
	Hardness Test [Note (1)]			
	HV	HR 15N	HR A	HRC
	Hardness Values			
1070–1095 carbon steel (UNS G10700–UNS G10950)	458–560	83.5–86.9	73.6–77.4	45–53
410–420 corrosion-resistant steel (UNS S41000–UNS S42000)	423–544	82.0–86.4	72.0–76.8	43–52
302 corrosion-resistant steel (UNS S30200)	N/A (Work hardened)	N/A (Work hardened)	N/A (Work hardened)	N/A (Work hardened)
Beryllium copper (UNS C17200)	354–412	78.3–81.5	68.4–71.5	36–42

NOTE:
(1) Vickers Hardness Test is to be conducted in accordance with ASTM E92 and Rockwell Hardness Tests are to be conducted in accordance with ASTM E18.

TABLE 6 DOUBLE SHEAR FORCE, kN

Nominal Pin Size	Material		
	Carbon & 400 Series Corrosion Resistant Steel	302 Series Corrosion Resistant Steel	Beryllium Copper
Type A			
1.5	1.6	0.9	1.0
2	2.8	1.6	1.7
2.5	4.4	2.6	2.7
3	6.3	3.7	3.9
Type B			
1.5	1.8	1.0	1.1
2	3.5	2.0	2.2
2.5	5.5	3.2	3.5
3	7.8	4.5	4.9
4	12.3	7.2	7.7
5	19.6	11.4	12.3
6	28.5	16.6	17.8
8	48.8	28.4	30.5
10	79.1	46.1	49.4
12	104.1	60.7	65.0

3.5 Workmanship

Slotted spring pins shall be free from burrs, loose scale, seams, notches, sharp edges and corners, and any other defect affecting their performance.

3.6 Acceptability

The quality evaluation of slotted spring pins will, unless otherwise specified, be in accordance with ASME B18.18.1M.

Copyright ASME International
Provided by IHS under license with ASME
No reproduction or networking permitted without license from IHS

Not for Resale

MANDATORY APPENDIX I
DOUBLE SHEAR TEST METHOD

The following specifications and procedures are set forth to establish uniformity in the testing of pins in double shear. ISO 8749 may be used for product evaluation.

The shear test shall be performed in a suitable fixture in which the pin support member and the member for applying the shear load have holes for the pin of a diameter conforming to the designated hole size. The fixture members contacting the pin shall have a minimum hardness of Rockwell C58 or equivalent. The clearance between the supporting member and loading member shall not exceed 0.15 mm, and a means for keeping the member aligned perpendicular to the axis of the pin shall be provided. The rate of load application shall not exceed 13 mm/min.

The shear planes shall be located at a minimum distance equivalent to one pin diameter from each end of the pin. Pins of lengths that are too short to be tested double shear shall be evaluated by testing two pins simultaneously in single shear. The shear planes may not be closer to each other than two pin diameters.

Two typical pin shear test fixtures are illustrated in Fig. I1.

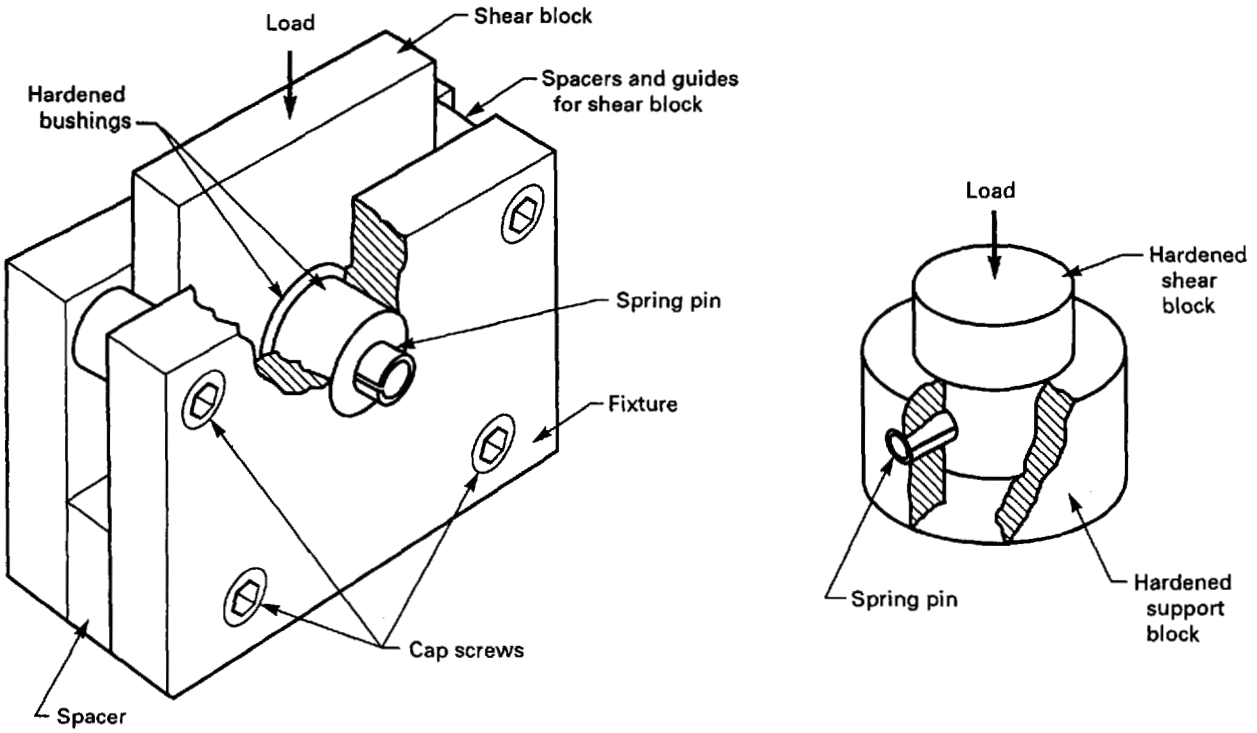

FIG. I1 TYPICAL SPRING PIN SHEAR TEST FIXTURES

Copyright ASME International
Provided by IHS under license with ASME
No reproduction or networking permitted without license from IHS
Not for Resale

ASME B18.8.5M-2000

1 Introductory Notes 17

2 General Data for Dowel Pins 18

3 Quality Assurance Provisions 21

4 Application Information 21

Figure

1 Point Concentricity 20

Tables

1 Dimensions of Hardened Ground Machine Dowel Pins 19

2 Practical Sizes and Lengths of Hardened Ground Machine Dowel Pins 20

Nonmandatory Appendix

A Application Information 22

Copyright ASME International
Provided by IHS under license with ASME
No reproduction or networking permitted without license from IHS
Not for Resale

MACHINE DOWEL PINS: HARDENED GROUND (METRIC SERIES)

1 INTRODUCTORY NOTES

1.1 Scope

1.1.1 This Standard covers the dimensional and general data for hardened ground dowel pins in sizes 1.5–25 mm in two series recognized as American National Standard, which are widely used in general industrial applications.

1.1.2 The inclusion of dimensional data in this Standard is not intended to imply that all of the products described are stock production sizes. Consumers should consult with suppliers concerning the availability of the product.

1.2 Description

Hardened ground dowel pins are straight pins designed to be force fitted into a part to provide alignment or location in the assembly. The hardness and closely controlled diameter provide controlled fit and wear resistance for pin applications. One end of the pin is chamfered to assist in insetion while the opposite end has a crown profile to minimize edge damage during insertion.

1.3 Dimensions

All dimensions in this Standard are in millimeters unless otherwise noted and apply before plating or coating.

1.4 Options

Options, where specified, shall be at the discretion of the supplier, unless otherwise agreed upon by the supplier and purchaser.

1.5 Terminology

For definitions of terms relating to fasteners or component features thereof used in this Standard, refer to ASME B18.12.

1.6 Comparison With ISO 8734

The Standard series outside diameter dimensions are within the dimensional limits of ISO 8734, but the ISO 8734 pins may exceed the maximum standard pin diameter for 4 mm and larger sizes. ISO 8734 has only one series, but this Standard includes an Oversize series. The standard length increments in this Standard are fewer than those in ISO 8734. On pin lengths less than 35 mm only, the even lengths match the ISO lengths. For lengths over 50 mm the standard increment in length is 10 mm, whereas ISO 8734 has 5 mm as a standard increment. The pin length tolerance is unilateral, at −0.5 mm, but ISO 8734 has bilateral tolerances. Thus, pins of lengths 10 mm and shorter may be shorter than the minimums in ISO 8734, but all longer pins will meet the ISO requirements. The standard surface roughness requirements are finer than the ISO 8734 requirements. ISO 8734 has a spherical radius on the entrance end of through hardened pins while this Standard has only one configuration. The standard pin minimum core hardness is 2 HRC less than the ISO 8734.

1.7 Reference Standards

Unless otherwise specified, the referenced standards shall be the most recent issue at the time of order placement.

ASME B18.12, Glossary of Terms for Mechanical Fasteners

ASME B18.18.1M, Inspection and Quality Assurance for General Purpose Fasteners

ASME B18.24.3, Part Identifying Number (PIN) Code System Standard for B18 Nonthreaded Products

ASME B46.1, Surface Structure (Surface Roughness, Waviness, and Lay)

ASME Y14.5M, Dimensioning and Tolerancing

Publisher: American Society of Mechanical Engineers (ASME), Three Park Avenue, New York, NY 10016; Order Department: 22 Law Drive, Box 2300, Fairfield, NJ 07007-2300

Copyright ASME International
Provided by IHS under license with ASME
No reproduction or networking permitted without license from IHS
Not for Resale

ISO 8734, Parallel Pins of Hardened Steel and Martensitic Stainless Steel (Dowel Pins)

Publisher: International Organization for Standardization (ISO), 1 rue de Varembé, Case Postale 56, CH-1211, Genevè 20, Switzerland/Suisse

2 GENERAL DATA FOR DOWEL PINS

2.1 Diameter

2.1.1 Size. Hardened ground dowel pins are described in two series, the Standard series having minimum diameters 0.003 to 0.008 mm over the nominal diameter, intended for initial installation; and the Oversize series having minimum diameters 0.025 to 0.030 mm over the nominal diameter, intended for replacement use. For both series the diameter shall be ground, or ground and lapped, to the outside diameter dinensions specified in Table 1.

2.1.2 Roundness. The outer periphery of hardened ground machine dowel pins shall conform to true round about the longitudinal axis of the pin within 0.0025 mm when measured with equipment that will detect a lobed surface.

2.2 Ends

2.2.1 End Contours. The ends of hardened ground machine dowel pins shall be reasonably flat and perpendicular to the axis of the pin. One end of the pin shall be pointed and the other end crowned to the dimensions specified in Table 2. On the pointed end, the edge formed by the surface of point and the end of the pin may be slightly rounded or broken.

2.2.2 Point Concentricity. For pins having nominal lengths equal to four times the basic pin diameter and longer, the concentricity between the diameter of point and the pin diameter shall be such that the minimum length of point on the pin is not less than 0.3 mm. (See Fig. 1.)

2.3 Length

2.3.1 Measurement. The length of hardened ground machine dowel pins shall be measured overall from end to end, parallel to the pin axis.

2.3.2 Tolerance on Length. The tolerance of the length of hardened ground machine dowel pins shall be 0, −0.5 mm for all sizes and lengths.

2.3.3 Preferred Lengths. The preferred sizes and lengths in which hardened ground machine dowel pins are normally available are depicted in Table 2. Other sizes and lengths are produced as required by the purchaser.

2.3.4 Effective Length. The effective length, L_e (that portion of the pin length bounded by the length of point on one end and the radius of crown on the other) on short dowel pins shall not be less than 75% of the overall length of the pin. For the pin lengths affected, it may be necessary to deviate from the specified dimensions by reducing the crown radius and height, or increasing the point angle, or both. The minimum nominal length listed in Table 1 is the shortest standard length to accommodate the minimum effective requirement with standard end configurations.

2.3.5 Straightness. Machine dowel pins shall be straight over the effective length within 0.0005 times length for nominal lengths, up to and including 100 mm, and within 0.05 mm total for all nominal lengths over 100 mm.

2.4 Surface Roughness

The surface roughness on hardened ground machine dowel pins shall not exceed 0.2 μm arithmetical average on the effective length nor 3.2 μm arithmetical average on all other surfaces. Refer to ASME B46.1. For pins having additive finishes, these limits shall apply prior to coating or plating.

2.5 Materials

2.5.1 Steel. Hardened ground machine dowel pins shall be made from any carbon or alloy steel capable of begin heat treated to a core hardness of 50 HRC minimum and having sulphur and phosphorus content not in excess of 0.05 and 0.04%, respectively.

2.5.2 Heat Treatment. Pins shall be hardened by quenching in oil from the austenitizing temperature and tempering to meet the following conditions:

2.5.2.1 Case Hardened Pins. Pins shall be case hardened to a minimum case depth of 0.25 mm for nominal pin sizes 4 mm or smaller and 0.38 mm for nominal pins larger than 4 mm. The case shall have a minimum surface hardness of 90 HR15N (60 HRC) or equivalent, and the core hardness shall be 50–58 HRC. The microstructure shall be tempered martensite.

2.5.2.2 Through Hardened Pins. Pins smaller than 3 mm nominal size may be tempered martensite

Copyright ASME International
Provided by IHS under license with ASME
No reproduction or networking permitted without license from IHS

Not for Resale

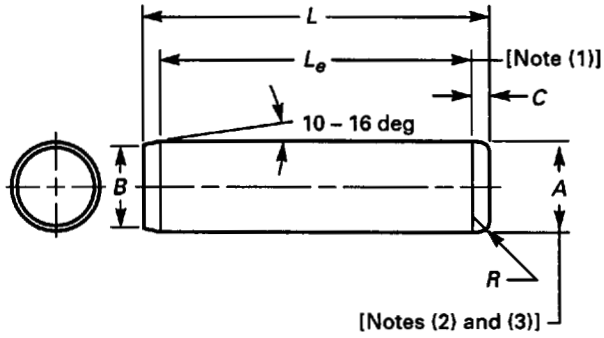

TABLE 1 DIMENSIONS OF HARDENED GROUND MACHINE DOWEL PINS

Nominal Pin Size	Pin Diameter — A				B		C	R	L [Note (1)]
	Standard Series		Oversize Series		Point Diameter		Crown	Radius	Nom.
	Max.	Min.	Max.	Min.	Max.	Min.	Max.	Min.	Min.
1.5	1.508	1.503	1.530	1.525	1.4	1.2	0.6	0.2	3.5
2.0	2.008	2.003	2.030	2.025	1.9	1.7	0.6	0.2	3.5
2.5	2.508	2.503	2.530	2.525	2.4	2.2	0.7	0.3	4.0
3.0	3.008	3.003	3.030	3.025	2.9	2.6	0.8	0.3	4.0
4.0	4.009	4.004	3.031	4.026	3.9	3.6	0.9	0.4	4.5
5.0	4.009	5.004	5.031	5.026	4.9	4.6	1.0	0.4	4.5
6.0	6.010	6.004	6.032	6.026	5.8	5.4	1.1	0.4	5.0
8.0	8.012	8.006	8.034	8.028	7.8	7.4	1.3	0.5	5.5
10.0	10.012	10.006	10.034	10.028	9.8	9.4	1.4	0.6	6.0
12.0	12.013	12.007	12.035	12.029	11.8	11.4	1.6	0.6	6.0
16.0	16.013	16.007	16.035	16.029	15.8	15.3	1.8	0.8	7.0
20.0	20.014	20.008	20.036	20.030	19.8	19.3	2.0	0.8	7.0
25.0	25.014	25.008	25.036	25.030	24.8	24.3	2.3	1.0	7.5

NOTES:
(1) See para. 2.3.4.
(2) See para. 2.3.5.
(3) Reference ASME Y14.5M Dimensioning & Tolerancing:

Characteristic	Symbol
Straightness	—
Diameter	Ø

through hardened to a hardness of 50–58 HRC as an option to para. 2.5.2.1. However, in no instance shall the hardness of the pin surface be softer than that of the core.

2.6 Finishes

Unless otherwise specified, machine dowel pins shall be furnished with a ground (as processed) finish or with black oxide coating as an option. Other protective or decorative finishes, where required, shall be subject to agreement between the manufacturer and purchaser. However, where a finish applied to carbon steel or alloy steel pins is such that it might produce hydrogen embrittlement, the pins shall be baked for a suitable time at a temperature that will minimize such embrittlement. Baking shall be accomplished as soon as possible following the plating or coating operation, inasmuch as delay is detrimental to achievement of the desired results. Where additive type finishes are used, the tabulated dimensions and tolerances shall apply to the pins prior to application of the plating or coating, unless otherwise specified by the purchaser.

2.7 Workmanship

Hardened ground machine dowel pins shall be free from detrimental burrs, cracks, seams, or nicks, and other defects affecting their serviceability or properties.

Copyright ASME International
Provided by IHS under license with ASME
No reproduction or networking permitted without license from IHS
Not for Resale

TABLE 2 PREFERRED SIZES AND LENGTHS OF HARDENED GROUND MACHINE DOWEL PINS

Nominal Length	Nominal Size												
	1.5	2	2.5	3	4	5	6	8	10	12	16	20	25
6	x	x	x										
8	x	x	x	x									
10	x	x	x	x	x								
12	x	x	x	x	x	x							
16		x	x	x	x	x	x	x					
20		x	x	x	x	x	x	x	x				
25			x	x	x	x	x	x	x	x			
30				x	x	x	x	x	x	x	x		
35					x	x	x	x	x	x	x		
40					x	x	x	x	x	x	x	x	
45						x	x	x	x	x	x	x	
50						x	x	x	x	x	x	x	x
60							x	x	x	x	x	x	x
70								x	x	x	x	x	x
80								x	x	x	x	x	x
90								x	x	x	x	x	x
100									x	x	x	x	x
110										x	x	x	x
120										x	x	x	x
130											x	x	x
140											x	x	x
150											x	x	x

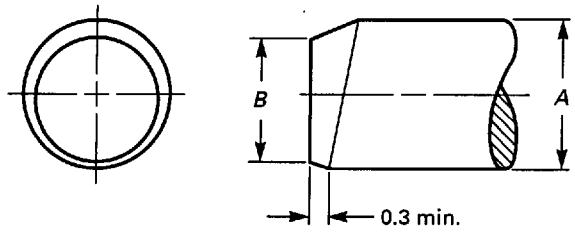

FIG. 1 POINT CONCENTRICITY

2.8 Designation

2.8.1 Hardened ground machine dowel pins conforming to this Standard shall be designated by the following data, in the sequence shown:

(a) specification (ASME/ANSI document) number followed by a dash;

(b) nominal pin diameter followed by "x";

(c) length;

(d) product name, including "Standard" or "Oversize" as needed;

Copyright ASME International
Provided by IHS under license with ASME
No reproduction or networking permitted without license from IHS

Not for Resale

(e) protective finish, if required.

EXAMPLES:
B18.8.5M — 1.5 x 12, Oversize Dowel Pin

B18.8.5M — 16 x 45, Standard Dowel Pin, Zinc Plated, ASTM B633 Type II

2.8.2 For a recommended part identifying numbering system (PIN), see ASME B18.24.3.

3 QUALITY ASSURANCE PROGRAM

Unless otherwise specified by the purchaser, acceptability of hardened ground machine dowel pins shall be based on conformance with the requirements specified in ASME B18.18.1M.

4 APPLICATION INFORMATION

4.1 Responsibility for Modifications

The manufacturer shall not be held responsible for malfunctions of pins determined to be due to plating or other modifications when such plating or modification is not accomplished under the manufacturer's control or direction.

Copyright ASME International
Provided by IHS under license with ASME
No reproduction or networking permitted without license from IHS

Not for Resale

NONMANDATORY APPENDIX A
APPLICATION INFORMATION

A1 HOLE SIZES

Because of the wide variety of materials in which dowel pins are used and the many design requirements which must be considered, it is not possible to provide hole size recommendations that will be suitable for all applications. However, the suggested hole sizes in Table A1 have been commonly used for press fitting Standard series dowel pins into materials such as mild steels and cast iron. In soft materials such as aluminum or zinc cast die castings, hole size limits are usually decreased by 0.013 mm to increase the press fits. Holes for Oversize series machine dowel pins may best be determined by the user to suit the particular application.

A2 SHEAR STRENGTH

For design calculations, the shear strength of these standard pins should be based on the values listed in Table A2.

TABLE A1 SUGGESTED HOLE SIZES

Nominal Pin Size	Hole Diameter Standard Series Pins	
	Max.	Min.
1.5	1.500	1.487
2.0	2.000	1.987
2.5	2.500	2.487
3.0	3.000	2.987
4.0	4.000	3.987
5.0	5.000	4.987
6.0	6.000	5.987
8.0	8.000	7.987
10.0	10.000	9.987
12.0	12.000	11.985
16.0	16.000	15.985
20.0	20.000	19.983
25.0	25.000	24.983

TABLE A2 SHEAR STRENGTH, kN

Nominal Pin Size	Calculated Single Shear Load for Steel Material
1.5	1.86
2.0	3.30
2.5	5.15
3.0	7.40
4.0	13.2
5.0	20.6
6.0	29.7
8.0	52.5
10.0	82.5
12.0	119
16.0	211
20.0	330
25.0	515

Copyright ASME International
Provided by IHS under license with ASME
No reproduction or networking permitted without license from IHS
Not for Resale

ASME B18.8.9M-2000

1 General 24

2 Dimensional Characteristics 25

3 Materials, Mechanical Properties, and Processing 26

Tables

1 Grooved Pin Recommended Hole Sizes 26
2 Minimum Double Shear Strength Values, kN 26
3 Dimensions of Type 39 and Type 40 Grooved Pins, mm 27
4 Dimensions of Type 42 and Type 43 Grooved Pins, mm 29
5 Dimensions of Type 43-1 and Type 43-2 Grooved Pins, mm 31
6 Dimensions of Type 44 Grooved Pins, mm 33
7 Dimensions of Type 45 Grooved Pins, mm 35
8 Dimensions of Type 46-1 and Type 46-2 Grooved Pins, mm 37
9 Dimensions of Type 47-1 and Type 47-2 Grooved Pins, mm 39
10 D_2 Reduction for Corrosion Resistant and Alloy Steels 40

Mandatory Appendix

I Double Shear Test Method 41

Nonmandatory Appendix

A Dimensions of Type 41 Grooved Pins, mm 42

Copyright ASME International
Provided by IHS under license with ASME
No reproduction or networking permitted without license from IHS
Not for Resale

GROOVED PINS (METRIC SERIES)

1 GENERAL

1.1 Scope

1.1.1 This Standard covers the complete dimensional, mechanical, and performance requirements for metric series grooved pins which are widely used in general industrial applications. These grooved pins have three grooves, equally spaced about their circumference, impressed longitudinally into their exterior surface, with nominal diameters, D_1, ranging from 1.5 mm to 12 mm, inclusive.

1.1.2 The displaced material at each side of the grooves forms an expanded diameter, D_2, which is larger than the nominal diameter, D_1, and designed to cause a positive locking fit when forced into a hole of the recommended diameter (see Table 1).

1.1.3 All dimensions in this Standard are in millimeters unless otherwise noted.

1.1.4 The inclusion of dimensional data in this Standard is not intended to imply that all products described are stocked production items. Consumers should consult with suppliers concerning the availability of products.

1.1.5 The responsible party for the performance of the products within the scope of this Standard is the organization that supplies the components to the purchaser and certifies or represents that the component was manufactured, tested, and inspected in accordance with this specification and meets all its requirements.

1.1.6 For definition of terms relating to fasteners or component features thereof used in this Standard, refer to ASME B18.12.

1.1.7 Unless otherwise specified, all standards and specifications referred to in this Standard shall be the most recently issued.

1.1.8 It should be noted that standards for grooved pins (inch series) are published in ASME B18.8.2.

1.2 Reference Standards

Unless otherwise specified, the referenced standards shall be the most recent issue at the time of order placement.

ASME B18.8.2, Taper Pins, Dowel Pins, Straight Pins, Grooved Pins and Spring Pins
ASME B18.12, Glossary of Terms for Mechanical Fasteners
ASME B18.18.1M, Inspection and Quality Assurance for General Purpose Fasteners
ASME B18.24.3, Part Identifying Number (PIN) Code System Standard for B18 Nonthreaded Products

Publisher: American Society of Mechanical Engineers (ASME), Three Park Avenue, New York, NY 10016; Order Department: 22 Law Drive, Box 2300, Fairfield, NJ 07007-2300

ISO 8739, Grooved Pins — Full Length Parallel Grooved, With Pilot
ISO 8740, Grooved Pins — Full-Length Parallel Grooved, With Chamfer
ISO 8742, Grooved Pins — One-Third Length Centre Grooved
ISO 8743, Grooved Pins — Half-Length Centre Grooved
ISO 8744, Grooved Pins — Full-Length Taper Grooved
ISO 8745, Grooved Pins — Half-Length Taper Grooved
ISO 8746, Grooved Pins With Round Head
ISO 8747, Grooved Pins With Countersunk Head
ISO 8749, Pins and Grooved Pins — Shear Test

Publisher: International Organization for Standardization (ISO), 1 rue de Varembé, Case Postale 56, CH-1211, Genevè 20, Switzerland/Suisse

Copyright ASME International
Provided by IHS under license with ASME
No reproduction or networking permitted without license from IHS
Not for Resale

1.3 Comparisons With ISO 8739-1986 Through ISO 8747-1986

1.3.1 The equivalent grooved pin types are as follows:

ASME	ISO	ASME	ISO
39	8739	44	8744
40	8740	45	8745
...	8741	46-1	8746 A
42	8742	46-2	8746 B
43	8743	47-1	8747 A
43-1	...	47-2	8747 B
43-2	...	...	...

1.3.2 The ISO standards cover carbon steel only. This Standard covers low carbon steel, austenitic corrosion resistant steel, and alloy steel.

1.3.3 The minimum double shear strengths of this Standard vary from the ISO standards because of different material selection.

1.3.4 The ISO standards cover nominal grooved pin diameters from 1.5 mm to 25 mm and this Standard covers from 1.5 mm to 12 mm.

1.3.5 The ISO standards typically have a smaller tolerance zone for the expanded diameters than in this Standard.

1.3.6 The ISO standards typically yield less interference between the hole and the expanded diameters.

1.3.7 This Standard reduces the expanded diameters as the pin length increases for all types except the headed grooved pins. ISO Types 8739 and 8740 maintain a constant expanded diameter through the entire length range. ISO Types 8742 and 8743 increase the expanded diameters as the pin length increases. ISO Types 8744 and 8745 increase the expanded diameters through the mid-range of the lengths and then reduce the expanded diameters of the longer lengths.

1.3.8 The expanded diameters of the ISO Types 8746 and 8747 for 1.4 mm and 1.6 mm are smaller than in this Standard.

1.3.9 The chamfer lengths of the ISO Types 8746 and 8747 are longer than in this Standard.

2 DIMENSIONAL CHARACTERISTICS

2.1 Grooves

2.1.1 Grooved pins shall have three grooves equally spaced about their circumference and aligned with the axis of the pin.

2.1.2 All grooves in any pin shall be uniform in depth, shape and length, with the crests free from tears, burrs, or other irregularities over their entire length.

2.1.3 The form of the groove shall be parallel, oval or tapered, dependent on the type of pin, and at the discretion of the supplier.

2.1.4 The included angle of the groove shall be 70 deg, but may be modified due to the resilience of the material.

2.2 Diameters

2.2.1 Nominal diameter, D_1, is the diameter of the pilots, if any, and the diameter described by the pin body at the midpoint between displaced material forming the ridges.

2.2.2 Expanded diameter, D_2, represents the circle described by the crests of the raised ridges.

2.2.3 The expanded diameter, D_2, in Tables 3 through 9 applies to low carbon steel pins only. The expanded diameter, D_2, in Tables 3 through 7 decreases according to Table 10 for alloy and corrosion resistant steels. For other materials, D_2 will be as agreed to by purchaser and supplier.

2.2.4 Conformance to the maximum and minimum expanded diameter of the pin should be determined by the use of GO and NO-GO gages, respectively.

2.3 Lengths

2.3.1 Pin length, L, is the length of the pin measured overall regardless of whether the pin has chamfered ends or crowned ends.

2.4 End Shape

2.4.1 All grooved pins may have chamfered or crowned ends at the option of the supplier, unless previously specified by the purchaser and agreed to by the supplier.

Copyright ASME International
Provided by IHS under license with ASME
No reproduction or networking permitted without license from IHS
Not for Resale

TABLE 1 GROOVED PIN RECOMMENDED HOLE SIZES

Nom. Pin Diameter	Drill Size	Min. Diameter	Max. Diameter
1.4	1.4	1.40	1.46
1.5	1.5	1.50	1.56
1.6	1.6	1.60	1.66
2	2	2.00	2.06
2.5	2.5	2.50	2.56
3	3	3.00	3.06
4	4	4.00	4.075
5	5	5.00	5.075
6	6	6.00	6.075
8	8	8.00	8.09
10	10	10.00	10.09
12	12	12.00	12.11

GENERAL NOTE:
1.4 and 1.6 nominal pin diameters are available in Types 46 and 47 only.

2.4.2 Pins may or may not have pilots on one or both ends to facilitate insertion, depending on the type of pin or as agreed to by purchaser and supplier.

3 MATERIALS, MECHANICAL PROPERTIES, AND PROCESSING

Grooved pins shall conform to the following requirements pertaining to materials, mechanical properties, processing, and testing and sampling procedures.

3.1 Materials

3.1.1 All pins in this Standard shall be made from low carbon steel supplied in its work hardened state, austentitic corrosion resistant steel supplied in its work hardened state, or alloy steel through hardened to 400–480 HV. Case hardened pins in low carbon steel can be supplied as agreed to by purchaser and supplier.

3.1.2 When required, pins may be made from other materials such as brass, monel, etc. When other materials are specified, the values given for the expanded diameter, D_2, shall be modified and shear values adjusted as agreed to by purchaser and supplier.

3.2 Performance Requirements

3.2.1 Grooved pins listed in Tables 3 though 7 shall be capable of withstanding the minimum double shear loads as listed in Table 2 when tested in accordance with the double shear testing method as set forth in Mandatory Appendix I. The double shear values listed in Table 2 apply to non-plated parts.

TABLE 2 MINIMUM DOUBLE SHEAR STRENGTH VALUES, kN

Nominal Diameter	Carbon Steel	Corrosion Resistant Steel	Alloy Steel
1.5	1.2	2.2	2.9
2	2.2	3.9	5.3
2.5	3.5	6.0	7.9
3	5.0	8.7	11.9
4	8.8	14.9	20.2
5	13.8	23.4	31.7
6	19.9	33.8	45.8
8	31.2	57.3	81.9
10	48.7	89.8	128.3
12	70.2	129.5	185.1

3.2.2 Grooved pins which have been sheared at or exceeding the minimums specified shall exhibit a ductile fracture at the shear plane with no longitudinal cracks.

3.3 Hole Sizes

The recommended hole sizes for grooved pins are shown in Table 1.

3.4 Finishes

3.4.1 Low carbon steel and alloy steel grooved pins will be supplied plain (i.e., natural finished) with a rust preventative lubricant unless otherwise specified by agreement between purchaser and supplier.

3.4.2 Preferred coatings are flash zinc plating, zinc plating with chromate conversion coating, black oxide, or phosphate coating.

3.4.3 Where a corrosion preventative finish applied to hardened low carbon or alloy steel pins is such that it might produce hydrogen embrittlement, the pins shall be baked for a suitable time at a temperature that will minimize such hydrogen embrittlement in conformance with the pertinent plating or coating specification. Baking shall be accomplished as soon as possible following the plating or coating operation, in as much as delay is detrimental to achievement of the desired results.

Copyright ASME International
Provided by IHS under license with ASME
No reproduction or networking permitted without license from IHS
Not for Resale

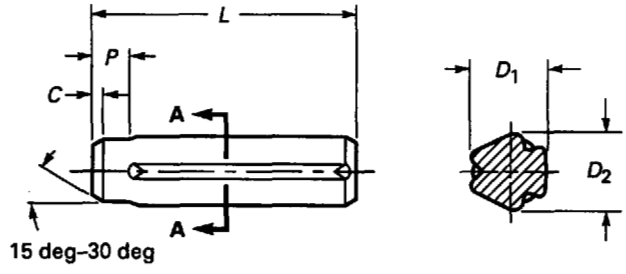

Crown Permissable Both Ends — Section A–A

Type 39

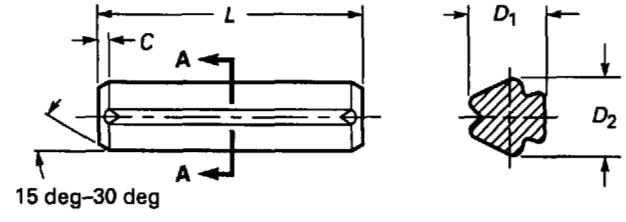

Crown Permissable Both Ends — Section A–A

Type 40

TABLE 3 DIMENSIONS OF TYPE 39 AND TYPE 40 GROOVED PINS, mm

D_1	Nom. (Max.)	1.5	2	2.5	3	4	5	6	8	10	12
	Min.	1.46	1.96	2.46	2.96	3.925	4.925	5.925	7.91	9.91	11.89
P	Max.	2	2	2.5	2.5	3	3	4	4	5	5
	Min.	1	1	1.5	1.5	2	2	3	3	4	4
C	Ref.	0.2	0.25	0.3	0.4	0.5	0.63	0.8	0.8	0.8	0.8

Table continues on following page.

3.4.4 Other coatings can be supplied as agreed upon by purchaser and supplier.

3.4.5 All tolerances shall apply prior to the application of the plating or coating.

3.4.6 When specified by the purchaser, austenitic corrosion resistant steel grooved pins shall be furnished passivated.

3.5 Workmanship

3.5.1 Grooved pins shall be free from burrs, seams, loose scale, sharp edges and corners, and any other defect affecting their performance.

3.6 Acceptability

3.6.1 The quality evaluation of grooved pins will be, unless otherwise specified, in accordance with ASME B18.18.1M.

Copyright ASME International
Provided by IHS under license with ASME
No reproduction or networking permitted without license from IHS
Not for Resale

TABLE 3 DIMENSIONS OF TYPE 39 AND TYPE 40 GROOVED PINS, mm (CONT'D)

L			Expanded Diameter, D_2								
Nom.	Min.	Max.	± 0.04	± 0.05		± 0.07				± 0.08	± 0.10
8	7.75	8.25	1.65	2.17	2.70	3.24	4.26	5.31	6.35	8.44	10.51	12.63
10	9.75	10.25										
12	11.5	12.5	1.62	2.14	2.67	3.21	4.23	5.28	6.32	8.41	10.48	12.60
14	13.5	14.5					4.21	5.26	6.29			
16	15.5	16.5										
18	17.5	18.5										
20	19.5	20.5										
22	21.5	22.5										
24	23.5	24.5										
26	25.5	26.5										
28	27.5	28.5										
30	29.5	30.5										
32	31.5	32.5										
35	34.5	35.5										
40	39.5	40.5										
45	44.5	45.5										
50	49.5	50.5										
55	54.25	55.75										
60	59.25	60.75										
65	64.25	65.75										
70	69.25	70.75										
75	74.25	75.75										
80	79.25	80.75										
85	84.25	85.75										
90	89.25	90.75										
95	94.25	95.75										
100	99.25	100.75										

GENERAL NOTES:

(a) The expanded diameter D_2 applies only to pins made from low carbon steel. For alloy and corrosion resistant steels, D_2 decreases according to Table 10. For other materials, D_2 will be as agreed to by purchaser and supplier.

(b) The range of commercial lengths is between the bold stepped lines.

(c) For testing D_2, a GO/NO-GO ring gauge should be used.

Copyright ASME International
Provided by IHS under license with ASME
No reproduction or networking permitted without license from IHS
Not for Resale

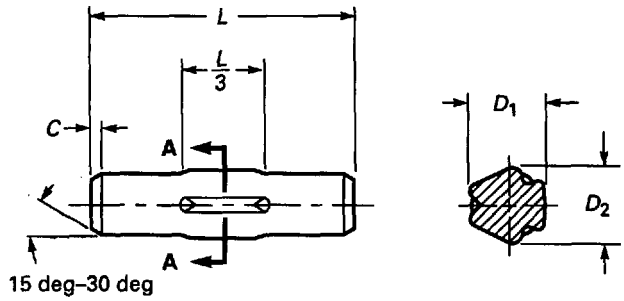

Crown Permissable Both Ends

Section A–A

Type 42

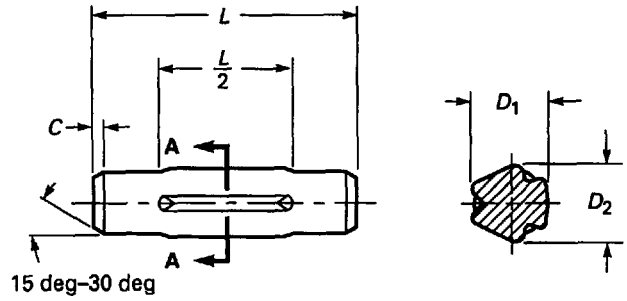

Crown Permissable Both Ends

Section A–A

Type 43

TABLE 4 DIMENSIONS OF TYPE 42 AND TYPE 43 GROOVED PINS, mm

D_1	Nom. (Max.)	1.5	2	2.5	3	4	5	6	8	10	12
	Min.	1.46	1.96	2.46	2.96	3.925	4.925	5.925	7.91	9.91	11.89
C	Ref.	0.2	0.25	0.3	0.4	0.5	0.63	0.8	0.8	0.8	0.8

Table continues on following page.

3.7 Designation

3.7.1 Grooved pins shall be designated by the following data in the sequence shown.

(a) Specification (ASME/ANSI Document) number followed by a dash.

(b) Type of pin followed by a dash.

(c) Nominal diameter in millimeters followed by an "x."

(d) Nominal length in millimeters followed by a dash.

(e) Material, including specification or heat treatment if necessary, followed by a dash.

(f) Protective finish, if required.

EXAMPLE: B18.8.9M - 39 - 10 x 50 - Low Carbon Steel

3.7.2 For a recommended part identifying number (PIN), see ASME B18.24.3.

3.8 Responsibility for Modifications

3.8.1 The manufacturer shall not be held responsible for malfunctions of pins determined to be due to plating or other modifications when such plating or modification is not accomplished under the manufacturer's control or direction.

Copyright ASME International
Provided by IHS under license with ASME
No reproduction or networking permitted without license from IHS
Not for Resale

TABLE 4 DIMENSIONS OF TYPE 42 AND TYPE 43 GROOVED PINS, mm (CONT'D)

L			Expanded Diameter, D_2																
Nom.	Min.	Max.	± 0.04	± 0.05		± 0.07				± 0.08		± 0.10							
8	7.75	8.25	1.65																
10	9.75	10.25																	
12	11.5	12.5		2.17	2.70	3.24													
14	13.5	14.5																	
16	15.5	16.5																	
18	17.5	18.5	1.62				4.26	5.31	6.35	8.44									
20	19.5	20.5																	
22	21.5	22.5																	
24	23.5	24.5																	
26	25.5	26.5		2.14															
28	27.5	28.5																	
30	29.5	30.5			2.67														
32	31.5	32.5																	
35	34.5	35.5																	
40	39.5	40.5																	
45	44.5	45.5					4.23												
50	49.5	50.5																	
55	54.25	55.75						5.28											
60	59.25	60.75																	
65	64.25	65.75							6.32										
70	69.25	70.75																	
75	74.25	75.75								8.41									
80	79.25	80.75																	
85	84.25	85.75																	
90	89.25	90.75																	
95	94.25	95.75																	
100	99.25	100.75																	
110	109.25	110.75																	
120	119.25	120.75																	

GENERAL NOTES:
(a) The expanded diameter D_2 applies only to pins made from low carbon steel. For alloy and corrosion resistant steels, D_2 decreases according to Table 10. For other materials, D_2 will be as agreed to by purchaser and supplier.
(b) The range of commercial lengths is between the bold stepped lines.
(c) For testing D_2, a GO/NO-GO ring gauge should be used.

Copyright ASME International
Provided by IHS under license with ASME
No reproduction or networking permitted without license from IHS Not for Resale

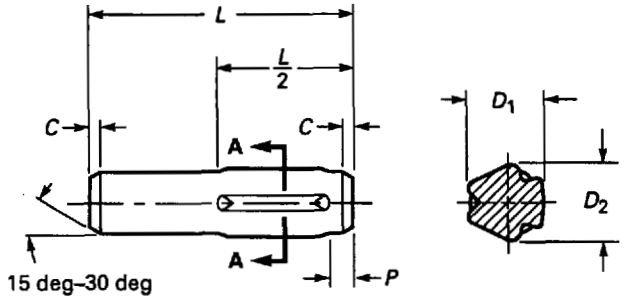

Type 43-1

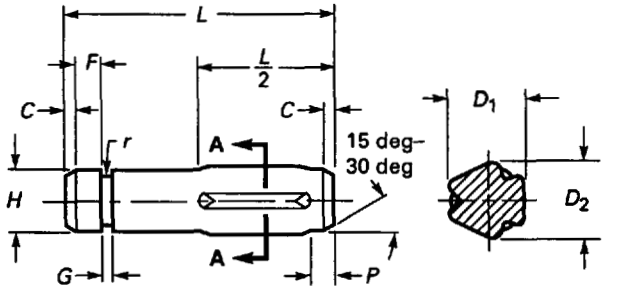

Type 43-2

TABLE 5 DIMENSIONS OF TYPE 43-1 AND TYPE 43-2 GROOVED PINS, mm

D_1	Nom. (Max.)	1.5	2	2.5	3	4	5	6	8	10	12
	Min.	1.46	1.96	2.46	2.96	3.925	4.925	5.925	7.91	9.91	11.89
P	Max.	2	2	2.5	2.5	3	3	4	4	5	5
	Min.	1	1	1.5	1.5	2	2	3	3	4	4
C	Ref.	0.2	0.25	0.3	0.4	0.5	0.63	0.8	0.8	0.8	0.8
F	Max.	...	...	1.1	1.1	1.4	1.4	1.9	2.7	3.5	3.5
	Min.	...	...	0.8	0.8	1.1	1.1	1.6	2.4	3.2	3.2
G	Max.	...	...	1	1.2	1.6	1.9	2.3	3.1	3.8	4.6
	Min.	...	...	0.7	0.9	1.3	1.6	2	2.8	3.5	4.3
r	Ref.	...	...	0.4	0.5	0.7	0.9	1.1	1.5	1.8	2.2
H	Max.	...	...	1.85	2.15	2.8	3.5	4.15	5.5	6.8	8.15
	Min.	...	...	1.55	1.85	2.5	3.2	3.85	5.2	6.5	7.85

Table continues on following page.

Copyright ASME International
Provided by IHS under license with ASME
No reproduction or networking permitted without license from IHS Not for Resale

TABLE 5 DIMENSIONS OF TYPE 43-1 AND TYPE 43-2 GROOVED PINS, mm (CONT'D)

| *L* | | | Expanded Diameter, D_2 | | |

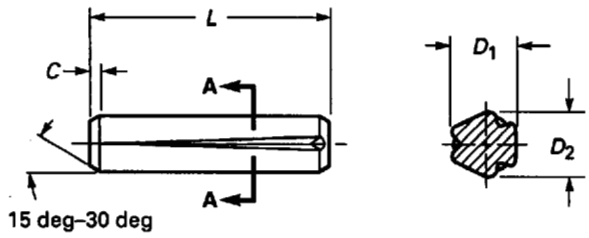

Crown Permissable Both Ends

Section A–A

Type 44

TABLE 6 DIMENSIONS OF TYPE 44 GROOVED PINS, mm

D_1	Nom. (Max.)	1.5	2	2.5	3	4	5	6	8	10	12
	Min.	1.46	1.96	2.46	2.96	3.925	4.925	5.925	7.91	9.91	11.89
C	Ref.	0.2	0.25	0.3	0.4	0.5	0.63	0.8	0.8	0.8	0.8

Table continues on following page.

Copyright ASME International
Provided by IHS under license with ASME
No reproduction or networking permitted without license from IHS Not for Resale

TABLE 6 DIMENSIONS OF TYPE 44 GROOVED PINS, mm (CONT'D)

L			Expanded Diameter, D_2												
Nom.	Min.	Max.	± 0.04	± 0.05		± 0.07				± 0.08		± 0.10			
8	7.75	8.25	1.65												
10	9.75	10.25		2.17	2.70										
12	11.5	12.5				3.24									
14	13.5	14.5					4.26								
16	15.5	16.5	1.62					5.31							
18	17.5	18.5							6.35						
20	19.5	20.5		2.14						8.44					
22	21.5	22.5			2.67										
24	23.5	24.5													
26	25.5	26.5				3.21	4.23					10.51	12.63		
28	27.5	28.5													
30	29.5	30.5						5.28							
32	31.5	32.5							6.32						
35	34.5	35.5					4.21			8.41					
40	39.5	40.5						5.26							
45	44.5	45.5													
50	49.5	50.5							6.29			10.48			
55	54.25	55.75											12.60		
60	59.25	60.75								8.38					
65	64.25	65.75							6.27						
70	69.25	70.75													
75	74.25	75.75								8.35					
80	79.25	80.75													
85	84.25	85.75										10.45	12.57		
90	89.25	90.75													
95	94.25	95.75													
100	99.25	100.75											12.54		
110	109.25	110.75													
120	119.25	120.75													

GENERAL NOTES:
(a) The expanded diameter D_2 applies only to pins made from low carbon steel. For alloy and corrosion resistant steels, D_2 decreases according to Table 10. For other materials, D_2 will be as agreed to by purchaser and supplier.
(b) The range of commercial lengths is between the bold stepped lines.
(c) For testing D_2, a GO/NO-GO ring gauge should be used.

Copyright ASME International
Provided by IHS under license with ASME
No reproduction or networking permitted without license from IHS Not for Resale

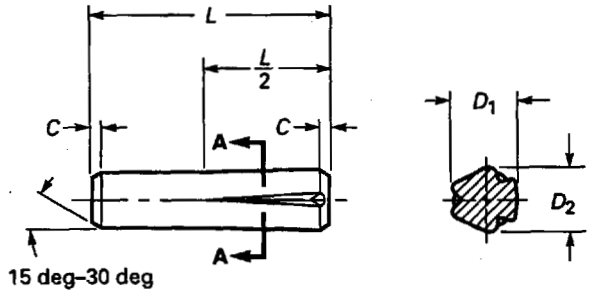

Crown Permissable Both Ends

Section A–A

Type 45

TABLE 7 DIMENSIONS OF TYPE 45 GROOVED PINS, mm

D_1	Nom. (Max.)	1.5	2	2.5	3	4	5	6	8	10	12
	Min.	1.46	1.96	2.46	2.96	3.925	4.925	5.925	7.91	9.91	11.89
C	Ref.	0.2	0.25	0.3	0.4	0.5	0.63	0.8	0.8	0.8	0.8

Table continues on following page.

Copyright ASME International
Provided by IHS under license with ASME
No reproduction or networking permitted without license from IHS Not for Resale

TABLE 7 DIMENSIONS OF TYPE 45 GROOVED PINS, mm (CONT'D)

L			Expanded Diameter, D_2									
Nom.	Min.	Max.	± 0.04	± 0.05		± 0.07				± 0.08		± 0.10
8	7.75	8.25										
10	9.75	10.25										
12	11.5	12.5										
14	13.5	14.5	1.65									
16	15.5	16.5		2.17								
18	17.5	18.5			2.70							
20	19.5	20.5				3.24						
22	21.5	22.5					4.26					
24	23.5	24.5						5.31				
26	25.5	26.5	1.62						6.35			
28	27.5	28.5		2.14						8.44		
30	29.5	30.5			2.67						10.51	
32	31.5	32.5										12.63
35	34.5	35.5										
40	39.5	40.5										
45	44.5	45.5					4.23					
50	49.5	50.5										
55	54.25	55.75						5.28				
60	59.25	60.75										
65	64.25	65.75										
70	69.25	70.75										
75	74.25	75.75							6.32			
80	79.25	80.75								8.41		
85	84.25	85.75										
90	89.25	90.75										
95	94.25	95.75									10.48	
100	99.25	100.75										12.60
110	109.25	110.75										
120	119.25	120.75										

GENERAL NOTES:

(a) The expanded diameter D_2 applies only to pins made from low carbon steel. For alloy and corrosion resistant steels, D_2 decreases according to Table 10. For other materials, D_2 will be as agreed to by purchaser and supplier.

(b) The range of commercial lengths is between the bold stepped lines.

(c) For testing D_2, a GO/NO-GO ring gauge should be used.

Copyright ASME International
Provided by IHS under license with ASME
No reproduction or networking permitted without license from IHS
Not for Resale

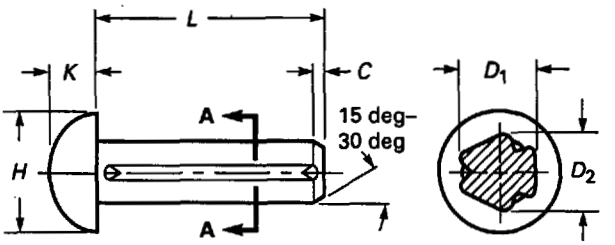

Section A–A

Type 46-1

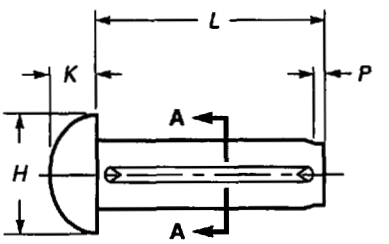

Type 46-2

TABLE 8 DIMENSIONS OF TYPE 46-1 AND TYPE 46-2 GROOVED PINS, mm

D_1	Nom. (Max.)	1.4	1.6	2	2.5	3	4	5	6	8	10	12
	Min.	1.35	1.55	1.95	2.425	2.925	3.9	4.9	5.9	7.85	9.85	11.8
H	Max.	2.6	3.0	3.7	4.6	5.45	7.3	9.1	10.9	14.4	16	19
	Min.	2.2	2.6	3.3	4.2	4.95	6.75	8.5	10.2	13.6	14.9	17.7
K	Max.	0.95	1.15	1.35	1.7	1.95	2.55	3.2	3.85	5.05	7.4	8.4
	Min.	0.7	0.9	1.1	1.4	1.65	2.25	2.85	3.45	4.6	6.5	7.5
C	Ref.	0.2	0.2	0.25	0.3	0.4	0.5	0.63	0.8	0.8	0.8	0.8
P	Ref.	0.42	0.48	0.6	0.75	0.9	1.2	1.5	1.8	2.4	3.0	3.6

Table continues on following page.

Copyright ASME International
Provided by IHS under license with ASME
No reproduction or networking permitted without license from IHS Not for Resale

TABLE 8 DIMENSIONS OF TYPE 46-1 AND TYPE 46-2 GROOVED PINS, mm (CONT'D)

L			Expanded Diameter, D_2										
Nom.	Min.	Max.	± 0.04		± 0.05		± 0.07				± 0.08		± 0.10
3	2.8	3.2	1.55	1.75	2.15	2.70	3.20	4.25	5.25	6.30	8.30	10.35	12.35
4	3.7	4.3											
5	4.7	5.3											
6	5.7	6.3											
8	7.7	8.3											
10	9.7	10.3											
12	11.6	12.4											
16	15.6	16.4											
20	19.5	20.5											
25	24.5	25.5											
30	29.5	30.5											
35	34.5	35.5											
40	39.5	40.5											

GENERAL NOTES:
(a) The expanded diameter D_2 applies only to pins made from low carbon steel. For other materials, D_2 will be as agreed to by purchaser and supplier.
(b) The range of commercial lengths is between the bold stepped lines.
(c) For testing D_2, a GO/NO-GO ring gauge should be used.

Copyright ASME International
Provided by IHS under license with ASME
No reproduction or networking permitted without license from IHS
Not for Resale

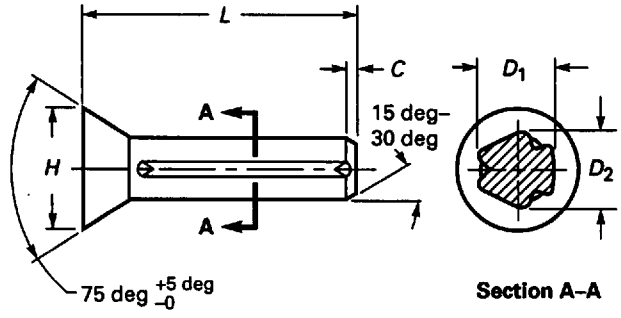

Type 47-1

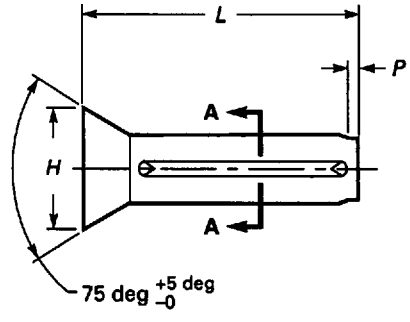

Type 47-2

TABLE 9 DIMENSIONS OF TYPE 47-1 AND TYPE 47-2 GROOVED PINS, mm

D_1	Nom. (Max.)	1.4	1.6	2	2.5	3	4	5	6	8	10	12
	Min.	1.35	1.55	1.95	2.425	2.925	3.9	4.9	5.9	7.85	9.85	11.8
H	Max.	2.7	3.0	3.7	4.6	5.45	7.25	9.1	10.8	14.4	16	19
	Min.	2.3	2.6	3.3	4.2	4.95	6.75	8.5	10.2	13.6	14.9	17.7
C	Ref.	0.2	0.2	0.25	0.3	0.4	0.5	0.63	0.8	0.8	0.8	0.8
P	Ref.	0.42	0.48	0.6	0.75	0.9	1.2	1.5	1.8	2.4	3.0	3.6

Table continues on following page.

Copyright ASME International
Provided by IHS under license with ASME
No reproduction or networking permitted without license from IHS Not for Resale

TABLE 9 DIMENSIONS OF TYPE 47-1 AND TYPE 47-2 GROOVED PINS, mm (CONT'D)

L			Expanded Diameter, D_2										
Nom.	Min.	Max.	± 0.04		± 0.05		± 0.07				± 0.08		± 0.10
3	2.8	3.2	1.55	1.75	2.15	2.70	3.20	4.25	5.25	6.30	8.30	10.35	12.35
4	3.7	4.3											
5	4.7	5.3											
6	5.7	6.3											
8	7.7	8.3											
10	9.7	10.3											
12	11.6	12.4											
16	15.6	16.4											
20	19.5	20.5											
25	24.5	25.5											
30	29.5	30.5											
35	34.5	35.5											
40	39.5	40.5											

GENERAL NOTES:
(a) The expanded diameter D_2 applies only to pins made from low carbon steel. For other materials, D_2 will be as agreed to by purchaser and supplier.
(b) The range of commercial lengths is between the bold stepped lines.
(c) For testing D_2, a GO/NO-GO ring gauge should be used.

TABLE 10 D_2 REDUCTION FOR CORROSION RESISTANT AND ALLOY STEELS

Nominal Diameter	D_2 Reduction
1.5	0.01
2	0.02
2.5	0.04
3	0.05
4	0.05
5	0.07
6	0.08
8	0.10
10	0.13
12	0.15

Copyright ASME International
Provided by IHS under license with ASME
No reproduction or networking permitted without license from IHS
Not for Resale

MANDATORY APPENDIX I
DOUBLE SHEAR TEST METHOD

The following specifications and procedures are set forth to establish uniformity in the testing of pins in double shear. ISO 8749 may be used for product evaluation.

The shear test shall be performed in a suitable fixture in which the pin support member and the member for applying the shear load have holes for the pin of a diameter conforming to Table I1. The fixture members contacting the pin shall have a minimum hardness of 700 HV or equivalent. The clearance between the supporting member and loading member shall not exceed 0.15 mm and a means for keeping the member aligned perpendicular to the axis of the pin shall be provided. The rate of load application shall not exceed 13 mm/min.

The shear planes shall be located at a minimum distance equivalent to one pin diameter from each end of the pin. Pins of lengths that are too short to be tested double shear shall be evaluated by testing two pins simultaneously in single shear. The shear planes may not be closer to each other than two pin diameters.

Two typical pin shear test fixtures are illustrated in Fig. I1.

TABLE I1 HOLE SIZES FOR DOUBLE SHEAR TEST FIXTURES

Nom. Dia.	1.5	2	2.5	3	4	5	6	8	10	12
Min.	1.5	2	2.5	3	4	5	6	8	10	12
Max.	1.514	2.014	2.514	3.018	4.018	5.018	6.022	8.022	10.077	12.027

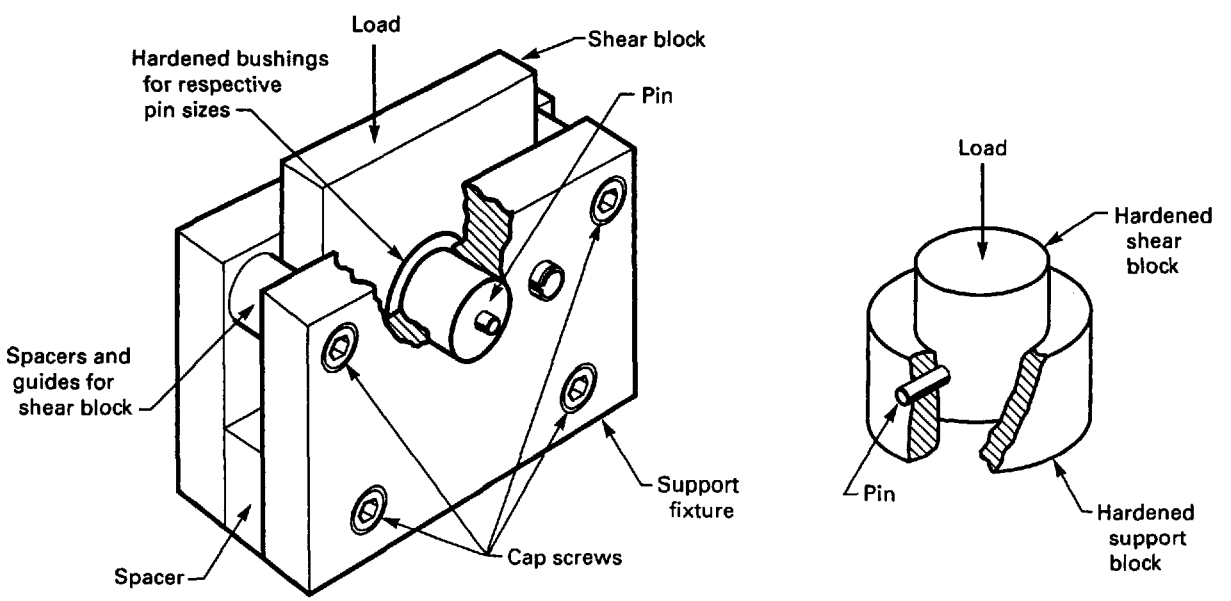

FIG. I1 TYPICAL GROOVED PIN SHEAR TEST FIXTURES

Copyright ASME International
Provided by IHS under license with ASME
No reproduction or networking permitted without license from IHS
Not for Resale

NONMANDATORY APPENDIX A
DIMENSIONS OF TYPE 41 GROOVED PINS

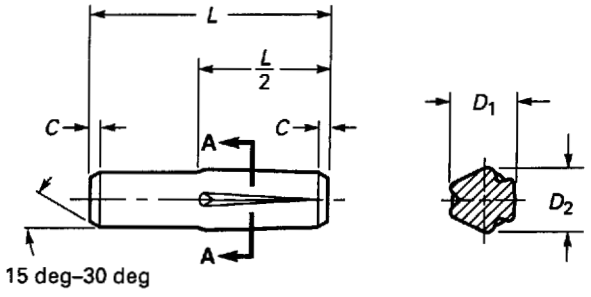

Crown Permissable Both Ends **Section A–A**

Type 41

DIMENSIONS OF TYPE 41 GROOVED PINS, mm

D_1	Nom. (Max.)	1.5	2	2.5	3	4	5	6	8	10	12
	Min.	1.46	1.96	2.46	2.96	3.925	4.925	5.925	7.91	9.91	11.89
C	Ref.	0.2	0.25	0.3	0.4	0.5	0.63	0.8	0.8	0.8	0.8

Table continues on following page.

Copyright ASME International
Provided by IHS under license with ASME
No reproduction or networking permitted without license from IHS
Not for Resale

DIMENSIONS OF TYPE 41 GROOVED PINS, mm (CONT'D)

| *L* | | | Expanded Diameter, D_2 | | |

ASME Services

ASME is committed to developing and delivering technical information. At ASME's Information Central, we make every effort to answer your questions and expedite your orders. Our representatives are ready to assist you in the following areas:

ASME Press
Codes & Standards
Credit Card Orders
IMechE Publications
Meetings & Conferences
Member Dues Status
Member Services & Benefits
Other ASME Programs
Payment Inquiries
Professional Development
Short Courses
Publications
Public Information
Self-Study Courses
Shipping Information
Subscriptions/Journals/Magazines
Symposia Volumes
Technical Papers

How can you reach us? It's easier than ever!

There are four options for making inquiries* or placing orders. Simply mail, phone, fax, or E-mail us and an Information Central representative will handle your request.

Mail
ASME
22 Law Drive, Box 2900
Fairfield, New Jersey
07007-2900

Call Toll Free
US & Canada: 800-THE-ASME
(800-843-2763)
Mexico: 95-800-THE-ASME
(95-800-843-2763)
Universal: 973-882-1167

Fax—24 hours
973-882-1717
973-882-5155

E-Mail—
24 hours
Infocentral@asme.org

* Information Central staff are not permitted to answer inquiries about the technical content of this code or standard. Information as to whether or not technical inquiries are issued to this code or standard is shown on the copyright page. All technical inquiries must be submitted in writing to the staff secretary. Additional procedures for inquiries may be listed within.

Copyright ASME International
Provided by IHS under license with ASME
No reproduction or networking permitted without license from IHS
Not for Resale

AMERICAN NATIONAL STANDARDS FOR BOLTS, NUTS, RIVETS, SCREWS WASHERS, AND SIMILAR FASTENERS

Small Solid Rivets ..... B18.1.1-1972(R1995)
Large Rivets ..... B18.1.2-1972(R1995)
Metric Small Solid Rivets ..... B18.1.3M-1983(R1995)
Square and Hex Bolts and Screws (Inch Series) B18.2.1-1996
Square and Hex Nuts (Inch Series) ..... B18.2.2-1987(R1999)
Metric Hex Cap Screws B18.2.3.1M-1999
Metric Formed Hex Screws ..... B18.2.3.2M-1979(R1995)
Metric Heavy Hex Screws ..... B18.2.3.3M-1979(R1995)
Metric Hex Flange Screws ..... B18.2.3.4M-1984(R1995)
Metric Hex Bolts ..... B18.2.3.5M-1979(R1995)
Metric Heavy Hex Bolts ..... B18.2.3.6M-1979(R1995)
Metric Heavy Hex Structural Bolts ..... B18.2.3.7M-1979(R1995)
Metric Hex Lag Screws ..... B18.2.3.8M-1981(R1999)
Metric Heavy Hex Flange Screws ..... B18.2.3.9M-1984(R1995)
Square Head Bolts (Metric Series) B18.2.3.10M-1996
Metric Hex Nuts, Style 1 ..... B18.2.4.1M-1996
Metric Hex Nuts, Style 2 ..... B18.2.4.2M-1979(R1995)
Metric Slotted Hex Nuts ..... B18.2.4.3M-1979(R1995)
Metric Hex Flange Nuts ..... B18.2.4.4M-1982(R1999)
Metric Hex Jam Nuts ..... B18.2.4.5M-1979(R1998)
Metric Heavy Hex Nuts ..... B18.2.4.6M-1979(R1998)
Fasteners for Use in Structural Applications B18.2.6-1996
Clearance Holes for Bolt Screws and Studs B18.2.8-1999
Socket Cap, Shoulder, and Set Screws, Hex and Spline Keys (Inch Series) B18.3-1998
Socket Head Cap Screws (Metric Series) ..... B18.3.1M-1986(R1993)
Metric Series Hexagon Keys and Bits ..... B18.3.2M-1979(R1998)
Hexagon Socket Head Shoulder Screws (Metric Series) ..... B18.3.3M-1986(R1993)
Hexagon Socket Button Head Cap Screws (Metric Series) ..... B18.3.4M-1986(R1993)
Hexagon Socket Flat Countersunk Head Cap Screws (Metric Series) ..... B18.3.5M-1986(R1993)
Metric Series Socket Set Screws ..... B18.3.6M-1986(R1993)
Round Head Bolts (Inch Series) ..... B18.5-1990(R1998)
Metric Round Head Short Square Neck Bolts B18.5.2.1M-1996
Metric Round Head Square Neck Bolts ..... B18.5.2.2M-1982(R1993)
Round Head Square Neck Bolts With Large Head (Metric Series) ..... B18.5.2.3M-1990(R1998)
Wood Screws (Inch Series) ..... B18.6.1-1981(R1997)
Slotted Head Cap Screws, Square Head Set Screws, and Slotted Headless Set Screws B18.6.2-1998
Machine Screws and Machine Screw Nuts B18.6.3-1998
Thread Forming and Thread Cutting Tapping Screws and Metallic Drive Screws (Inch Series) B18.6.4-1998
Metric Thread-Forming and Thread-Cutting Tapping Screws B18.6.5M-2000
Metric Machine Screws B18.6.7M-1999
General Purpose Semi-Tubular Rivets, Full Tubular Rivets, Split Rivets and Rivet Caps ..... B18.7-1972(R1992)
Metric General Purpose Semi-Tubular Rivets ..... B18.7.1M-1984(R1992)
Clevis Pins and Cotter Pins (Inch Series) B18.8.1-1994
Taper Pins, Dowel Pins, Straight Pins, Grooved Pins, and Spring Pins (Inch Series) B18.8.2-1995
Spring Pins — Coiled Type (Metric Series) B18.8.3M-1995
Spring Pins — Slotted (Metric Series) B18.8.4M-1994
Machine Dowel Pins — Hardened Ground (Metric Series) B18.8.5M-1994
Cotter Pins (Metric Series) B18.8.6M-1995
Headless Clevis Pins (Metric Series) B18.8.7M-1994
Headed Clevis Pins (Metric Series) B18.8.8M-1994
Grooved Pins (Metric Series) B18.8.9M-1998
Spring Pins: Coiled Type, Spring Pins: Slotted, Machine Dowel Pins: Hardened Ground, and Grooved Pins (Metric Series) B18.8.100M-2000
Cotter Pins, Headless Clevis Pins, and Headed Clevis Pins B18.8.200M-2000
Plow Bolts (Inch Series) B18.9-1996
Track Bolts and Nuts ..... B18.10-1982(R1992)
Miniature Screws ..... B18.11-1961(R1992)
Glossary of Terms for Mechanical Fasteners ..... B18.12-1962(R1991)
Screw and Washer Assemblies — Sems (Inch Series) B18.13-1996
Screw and Washer Assemblies: Sems (Metric Series) B18.13.1M-1998
Forged Eyebolts ..... B18.15-1985(R1995)
Metric Lifting Eyes B18.15M-1998

Copyright ASME International
Provided by IHS under license with ASME
No reproduction or networking permitted without license from IHS
Not for Resale

Mechanical and Performance Requirements for Prevailing-Torque Type Steel Metric Hex Nuts and Hex Flange Nuts ..... B18.16.1M-1979(R1995)
Torque-Tension Test Requirements for Prevailing-Torque Type Steel Metric Hex Nuts and Hex Flange Nuts ..... B18.16.2M-1979(R1995)
Dimensional Requirements for Prevailing-Torque Type Steel Metric Hex Nuts and Hex Flange Nuts B18.16.3M-1998
Inspection and Quality Assurance for General Purpose Fasteners ..... B18.18.1M-1987(R1999)
Inspection and Quality Assurance for High-Volume Machine Assembly Fasteners ..... B18.18.2M-1987(R1999)
Inspection and Quality Assurance for Special Purpose Fasteners ..... B18.18.3M-1987(R1999)
Inspection and Quality Assurance for Fasteners for Highly Specialized Engineered Applications ..... B18.18.4M-1987(R1999)
Inspection and Quality Assurance Plan Requiring In-Process Inspection and Controls B18.18.5M-1998
Quality Assurance Plan for Fasteners Produced in a Third Party Accreditation System B18.18.6M-1998
Quality Assurance Plan for Fasteners Produced in a Customer Approved Control Plan B18.18.7M-1998
Lock Washers (Inch Series) B18.21.1-1999
Lock Washers (Metric Series) B18.21.2M-1999
Metric Plain Washers ..... B18.22M-1981(R1990)
Plain Washers ..... B18.22.1-1965(R1998)
Part Identifying Number (PIN) Code System Standard for B18 Externally Threaded Products B18.24.1-1996
Part Identifying Number (PIN) Code System Standard for B18 Internally Threaded Products B18.24.2-1998
Part Identifying Number (PIN) Code System Standard for B18 Nonthreaded Products B18.24.3-1998
Square and Rectangular Keys and Keyways B18.25.1M-1996
Woodruff Keys and Keyways B18.25.2M-1996
Square and Rectangular Keys and Keyways: Width Tolerances and Deviations Greater Than Basic Size B18.25.3M-1998
Tapered and Reduced Cross Section Retaining Rings (Inch Series) B18.27-1998
Helical Coil Screw Thread Inserts (Inch Series) — Free Running and Screw Locking B18.29.1-1993
Open-End Blind Rivets With Break Mandrels (Metric Series) B18.30.1M-2000

The ASME Publications Catalog shows a complete list of all the Standards published by the Society. For a complimentary catalog, or the latest information about our publications, call 1-800-THE-ASME (1-800-843-2763).

Copyright ASME International
Provided by IHS under license with ASME
No reproduction or networking permitted without license from IHS
Not for Resale

ISBN 0-7918-2644-9





M17900

Copyright ASME International
Provided by IHS under license with ASME
No reproduction or networking permitted without license from IHS

Not for Resale