ANSI B18.6.1-1981
6 APRIL 1982

ACCEPTANCE NOTICE

This non-Government document was adopted on 6 April 1982, and is approved for use by the DoD. The indicated industry group has furnished the clearance required by existing regulations. Copies of the document are stocked by the DoD Single Stock Point, Naval Publications and Forms Center, Philadelphia, PA 19120, for issue to DoD activities only. Contractors and Industry groups must obtain copies directly from:

The American Society of Mechanical Engineers
United Engineering Center, 345 E. 47th Street
New York, NY 10017 or

The American National Standards Institute
1430 Broadway, New York, NY 10018

| | |
|---|---|
| Title of Document: | Wood Screws (Inch series) |
| ANSI Document No.: | ANSI B18.6.1-1981 |
| Date of Specific Issue Adopted: | 23 November 1981 |
| Releasing Industry Group: | The American Society of Mechanical Engineers |

NOTICE: When reaffirmation, amendment, revision, or cancellation of this standard is initially proposed, the industry group responsible for this standard shall inform the military coordinating activity of the proposed change and request participation.

Custodians:
Army - AR
Navy - SH
Air Force - 99

Military Coordinating Activity:
Army - AR
(Project 5305-1508).

Review Activities:
Army - AV, AT, EA, CR
DLA - IS
NSA - NS

User Activities:
Army - ME
Navy - MC

Civil Agnecies Coordinating Activities:
GSA - FSS

FSC 5305

THIS DOCUMENT CONTAINS 1 PAGES.

Copyright ASME International
Provided by IHS under license with ASME
No reproduction or networking permitted without license from IHS
Not for Resale

D-23-05

AMERICAN NATIONAL STANDARD

# Wood Screws (INCH SERIES)

## ANSI B18.6.1 - 1981

[REVISION OF B18.6.1—1972 (R1977)]

*SECRETARIAT*

SOCIETY OF AUTOMOTIVE ENGINEERS
THE AMERICAN SOCIETY OF MECHANICAL ENGINEERS

*PUBLISHED BY*

THE AMERICAN SOCIETY OF MECHANICAL ENGINEERS

United Engineering Center 345 East 47th Street New York, N. Y. 10017

Copyright ASME International
Provided by IHS under license with ASME
No reproduction or networking permitted without license from IHS

Not for Resale

Date of Issuance: February 28, 1982

This code or standard was developed under procedures accredited as meeting the criteria for American National Standards. The Consensus Committee that approved the code or standard was balanced to assure that individuals from competent and concerned interests have had an opportunity to participate. The proposed code or standard was made available for public review and comment which provides an opportunity for additional public input from industry, academia, regulatory agencies, and the public-at-large.

ASME does not "approve," "rate," or "endorse" any item, construction, proprietary device, or activity.

ASME does not take any position with respect to the validity of any patent rights asserted in connection with any items mentioned in this document, and does not undertake to insure anyone utilizing a standard against liability for infringement of any applicable Letters Patent, nor assume any such liability. Users of a code or standard are expressly advised that determination of the validity of any such patent rights, and the risk of infringement of such rights, is entirely their own responsibility.

Participation by federal agency representative(s) or person(s) affiliated with industry is not to be interpreted as government or industry endorsement of this code or standard.

No part of this document may be reproduced in any form,
in an electronic retrieval system or otherwise,
without the prior written permission of the publisher.

Copyright © 1982 by
THE AMERICAN SOCIETY OF MECHANICAL ENGINEERS
All Rights Reserved
Printed in U.S.A.

Copyright ASME International
Provided by IHS under license with ASME
No reproduction or networking permitted without license from IHS

Not for Resale

## FOREWORD

American National Standards Committee B18 for the standardization of bolts, screws, nuts, rivets and similar fasteners was organized in March 1922, as Sectional Committee B18 under the aegis of the American Engineering Standards Committee (later the American Standards Association, then the United States of America Standards Institute and, as of October 6, 1969, the American National Standards Institute, Inc.), with the Society of Automotive Engineers and the American Society of Mechanical Engineers as joint sponsors. Subcommittee 3* was subsequently established and charged with the responsibility for technical content of standards covering slotted and recessed head screws.

An American Standard setting forth slotted head proportions was approved and published in April of 1930.

Over the years following the issuance of this document, the need for standards more comprehensive than head configurations became apparent. At a meeting held on April 14, 1942, Subcommittee 3* was reorganized and enlarged, and the following operating scope was established:

The scope of Subcommittee 3* shall consist of the development and promulgation of American Standards embracing screw products variously known as machine screws, wood screws, tapping screws, slotted head cap screws and slotted headless set screws and machine screw nuts. The standards shall comprise complete product standards covering all dimensions and tolerances required for the specification and production of the products. Details shall include boundary dimensions; such as, nut width and thickness; screw head dimensions; slot and recess dimensions; body dimensions; thread classification or thread detail, as required; thread length; point design; chamfers; underhead fillets; and supporting general specifications covering the quality, finish, and the acceptable tolerances and limits as well as any information that may be necessary to insure satisfactory application of the products.

Several meetings of the Subcommittee over the ensuing three years resulted in the development and acceptance of a proposed revision containing complete product standards coverage for slotted and recessed head machine, tapping and wood screws; slotted head and hexagon head cap screws; and slotted headless set screws. Following approval by the B18 Committee and sponsor organizations, this proposal was forwarded to the American Standards Association and declared an American Standard, ASA B18.6 on April 12, 1947.

Recognizing the need for further refinements, Subcommittee 3* at a meeting held on February 1, 1951, established three standing working subgroups: one to develop details pertinent to tapping screw threads; a second to review, revise, and develop head dimensions and tolerances; and a third to correlate and edit the technical information emanating from the other two groups. Also at this meeting, numerous suggested changes were reviewed and assigned to the respective subgroups for further development. Additional meetings of the Subcommittee were held on October 9, 1952; October 29, 1953 and April 1 and 2, 1954. Between each of these meetings the subgroups held numerous working sessions and carried on technical development in cooperation with the technical committees of the U.S. Machine Screw and Tapping Screw Service Bureaus.

At the April 1954 meeting, Subcommittee 3*, contemplating a partial revision of the ASA B18.6 document, recommended the publication of standards for wood screws, cap and set screws, machine screws, and tapping and drive screws in four separate documents each of which would consist of a complete product specification. This approach was confirmed by the B18 Committee with the further stipulation that the coverage for hexagon head cap screws, square head set screws and machine screw nuts from the ASA B18.2 standard be transferred to the documents covering cap and set screws and machine screws, respectively. It was understood, that jurisdiction over the square head set screws and hexagon head cap screws would remain with Subcommittee 2 and that Subcommittee 3* would retain responsibility for machine screw nuts. Following this confirmation and additional direction, the preparation of proposals for the new documents was undertaken.

* As of April 1, 1966; Subcommittee 3 was redesignated Subcommittee 6.



Copyright ASME International
Provided by IHS under license with ASME
No reproduction or networking permitted without license from IHS
Not for Resale

The proposed standard covering slotted and recessed head wood screws, revised to incorporate the penetration gaging for recessed heads, was approved by letter ballot of the B18 Committee on March 31, 1955. Following its acceptance by the sponsor organizations, the proposal was submitted to the American Standards Association for approval and adoption. Designation as American Standard, ASA B18.6.1, was granted on March 1, 1956.

A proposed revision to the document containing numerous changes and corrections to the dimensional data was approved by letter ballot of the B18 Committee dated April 19, 1957. This proposal, after being rearranged for appearance and consistency with other B18 documents by the editing subgroup, was subsequently approved by the sponsors and the American Standards Association and was officially recognized as an American Standard on October 11, 1961.

A revised standard, embodying the inclusion of Type IA cross recess data and wobble gaging of recessed heads in addition to a complete revamping of the format, was completed in October of 1969 by Subcommittee 6. This proposal was duly approved by letter ballot of the B18 Committee and sponsor organizations and submitted to the American National Standards Institute. It was designated as American National Standard on January 28, 1972.

In 1977, Subcommittee 6 authorized revision of the standard to include dimensional data for rolled thread product and pan heads. After study of initial drafts at later meetings, it was further agreed that, in the interest of simplification, the head dimensions for the No. 14, No. 18 and No. 24 size wood screws should be made to agree with the corresponding 1/4, 5/16 and 3/8 in. size tapping screw heads, respectively; and that the coverage for round heads should be deprecated by relegation without change to the appendix. A draft proposal incorporating all of the foregoing recommendations was accepted by the subcommittee and subsequently approved by letter ballot of the B18 Committee. Following its acceptance by the sponsor organizations this document was submitted to the American National Standards Institute and was granted American National Standard status on November 23, 1981.



Copyright ASME International
Provided by IHS under license with ASME
No reproduction or networking permitted without license from IHS
Not for Resale

# AMERICAN NATIONAL STANDARDS COMMITTEE B18
# STANDARDIZATION OF BOLTS, NUTS, RIVETS, SCREWS WASHERS AND SIMILAR FASTENERS

## OFFICERS

**J. B. Levy,** *Chairman*
**E. Schwartz,** *Vice Chairman*
**H. W. Ellison,** *Vice Chairman*
**Richard McGinnis,** *Secretary*

## COMMITTEE PERSONNEL

AMERICAN CHAIN ASSOCIATION
*L. E. Hampel,* Moline Malleable Iron Company, St. Charles, Illinois

AMERICAN SOCIETY OF AGRICULTURAL ENGINEERS
*E. R. Friesth,* Coal Valley, Illinois

AMERICAN SOCIETY OF MECHANICAL ENGINEERS, THE
*A. R. Machell, Jr.,* Xerox Corporation, Rochester, New York
*C. R. Adams, Alternate,* Newport News Shipbuilding & Dry Dock Co., Newport News, Virginia
*K. E. McCullough, Alternate,* SPS Technologies, Inc., Jenkintown, Pennsylvania

ANTI-FRICTION BEARING MANUFACTURERS ASSOCIATION
*W. J. Derner,* FMC Corporation, Indianapolis, Indiana

ENGINE MANUFACTURERS ASSOCIATION
*G. Russ,* Cummins Engine Company, Columbus, Indiana

FARM & INDUSTRIAL EQUIPMENT INSTITUTE
*A. Clever,* Deere & Company, Moline, Illinois

HAND TOOLS INSTITUTE
*R. Keppner,* J. H. Williams Company, Buffalo, New York

INDUSTRIAL FASTENERS INSTITUTE
*R. B. Belford,* Industrial Fasteners Institute, Cleveland, Ohio
*D. A. Garrison,* Russell, Burdsall & Ward Corporation, Rock Falls, Illinois
*J. A. Trilling,* Holo-Krome Company, West Hartford, Connecticut
*C. Gordon,* Parker-Kalon, Campbellsville, Kentucky
*S. Vass,* Lake Erie Screw Corporation, Lakewood, Ohio
*D. P. Wagner,* Illinois Tool Works, Inc., Elgin, Illinois
*D. D. Wheeler,* Armco Steel Corporation, Kansas City, Missouri
*J. Orlando,* ITT Harper, Morton Grove, Illinois
*E. D. Spengler, Alternate,* Bethlehem Steel Corporation, Lebanon, Pennsylvania
*R. M. Harris,* Bethlehem Steel Corporation, Lebanon, Pennsylvania
*F. R. Ling, Alternate,* Russell, Burdsall & Ward Corporation, Mentor, Ohio

METAL CUTTING TOOL INSTITUTE
*Dino Emanuelli,* Greenfield Tap & Die, Greenfield, Massachusetts

NATIONAL ELECTRICAL MANUFACTURERS ASSOCIATION
*J. B. Levy,* General Electric Company, Schenectady, New York
*F. F. Weingruber,* Westinghouse Electric Corporation, Pittsburgh, Pennsylvania
*R. B. Jolley, Alternate,* National Electrical Manufacturers Association, Washington, D.C.



Copyright ASME International
Provided by IHS under license with ASME
No reproduction or networking permitted without license from IHS
Not for Resale

SOCIETY OF AUTOMOTIVE ENGINEERS
*H. W. Ellison,* General Motors Corporation, Warren, Michigan
*R. S. Piotrowski,* Mack Trucks, Inc., Allentown, Pennsylvania
*C. F. Schaening,* GM Engineering Standards Section, Warren, Michigan
*R. R. Sjoberg,* International Harvester Company, Hinsdale, Illinois
*D. W. Vial,* Chrysler Corporation, Detroit, Michigan

TELEPHONE GROUP
*R. A. Agnew,* Western Electric Company, Chicago, Illinois
*R. Morse,* Bell Laboratories, Columbus, Ohio
*H. Haefeli, Alternate,* Bell Laboratories, Columbus, Ohio

TUBULAR AND MACHINE INSTITUTE
*J. G. Zeratsky,* National Rivet & Manufacturing Company, Waupun, Wisconsin
*R. M. Byrne,* U.S. Screw Service Bureau, White Plains, New York

U.S. DEPARTMENT OF THE ARMY
*M. E. Taylor,* U.S. Army Armament R & D Command, Dover, New Jersey
*Allen Herskovitz, Alternate,* U.S. Army Armament R & D Command, Dover, New Jersey

U.S. DEPARTMENT OF DEFENSE
*Eli Schwartz,* Defense Industrial Supply Center, Philadelphia, Pennsylvania
*Lewis Pieninck, Alternate,* Defense Industrial Supply Center, Philadelphia, Pennsylvania

U.S. DEPARTMENT OF THE NAVY
*J. Haas,* Department of the Navy, Washington, D.C.
*M. S. Orysh, Alternate,* Department of the Navy, Philadelphia, Pennsylvania

INDIVIDUAL COMPANIES
*R. W. Bertoia,* The Ohio Nut & Washer Company, Mingo Junction, Ohio
*E. D. Cowlin,* Canton, Ohio
*J. E. Eaton, Jr.,* IBM Corporation, Boulder, Colorado
*J. J. Naesset,* Clark Equipment Company, Battle Creek, Michigan
*J. F. Tornow,* Microdot Incorporated, Troy, Michigan

INDIVIDUAL MEMBERS
*E. R. Carter, Jr.,* The Allen Manufacturing Company, Hartford, Connecticut
*F. E. Graves,* Fairfield, Connecticut
*D. B. Carroll,* Ford Motor Company, Dearborn, Michigan
*H. Muenchinger,* Westerly, Rhode Island



Copyright ASME International
Provided by IHS under license with ASME
No reproduction or networking permitted without license from IHS
Not for Resale

## PERSONNEL OF SUBCOMMITTEE NO. 6 ON SLOTTED AND RECESSED HEAD SCREWS
**(Was Subcommittee No. 3 prior to April 1, 1966)**

*H. G. Muenchinger,* Chairman, Westerly, Rhode Island
*S. C. Adamek,* Pheoll Manufacturing Company, Chicago, Illinois
*S. Belcinski,* Alternate for Mr. Seymour, The Reed and Prince Manufacturing Company, Worcester, Massachusetts
*R. B. Belford,* Industrial Fasteners Institute, Cleveland, Ohio
*A. A. Bien,* Alternate for Mr. Vial, Chrysler Corporation, Detroit, Michigan
*A. R. Breed,* Alternate for Mr. Parker, The Lamson & Sessions Company, Cleveland, Ohio
*R. M. Byrne,* U.S. Screw Service Bureaus, New York, New York
*R. H. Carlson,* Camcar Screw & Manufacturing, Rockford, Illinois
*D. Corrette,* Colt Industries, Inc., Cleveland, Ohio
*C. P. Coldren,* Eaton, Yale and Towne, Inc., Massillon, Ohio
*J. F. Dickson,* Reed Rolled Thread Die Company, Holden, Massachusetts
*J. E. Eaton, Jr.,* IBM Corporation, Boulder, Colorado
*P. H. Foytho,* Harvey Hubbell, Inc., Bridgeport, Connecticut
*C. O. Franklin,* Marion, Iowa
*E. R. Friesth,* Coal Valley, Illinois
*G. A. Gobb,* Ford Motor Company, Dearborn, Michigan
*C. Gordon,* Parker Kalon Corporation, Campbellsville, Kentucky
*J. H. Grady,* Phillips International Company, Natick, Massachusetts
*F. E. Graves,* Fairfield, Connecticut
*H. Haefeli,* Bell Telephone Laboratories, Inc., Columbus, Ohio
*L. G. Harkins,* Alternate for Mr. Pieninck, Defense Industrial Supply Center, Philadelphia, Pennsylvania
*A. Herskovitz,* U.S. Army Armament R & D Command, Dover, New Jersey
*R. C. Kasperski,* The Steel Company of Canada, Ltd., Hamilton, Ontario, Canada
*J. B. Levy,* General Electric Company, Schenectady, New York
*D. T. Lipari,* Alternate for Mr. Haefeli, Bell Telephone Laboratories, Inc., Columbus, Ohio
*A. R. Machell, Jr.,* Xerox Corporation, Rochester, New York
*C. Mathewson,* Honeywell Incorporated, Minneapolis, Minnesota
*J. C. McMurray,* Russell, Burdsall & Ward Corporation, Mentor, Ohio
*G. Russ,* Cummins Engine Company, Columbus, Indiana
*A. J. Parker,* The Lamson & Sessions Company, Cleveland, Ohio
*J. C. Peck,* Fisher Body Division, General Motors Corporation, Warren, Michigan
*L. Pieninck,* Defense Industrial Supply Center, Philadelphia, Pennsylvania
*K. D. Ringland,* Parker Kalon Corporation, Campbellsville, Kentucky
*C. F. Schaening,* General Motors Corporation, Warren, Michigan
*R. Seymour,* The Reed and Prince Manufacturing Company, Worchester, Massachusetts
*J. F. Tornow,* Everlock Division, A Microdot Company, Troy, Michigan
*D. W. Vial,* Chrysler Corporation, Detroit, Michigan
*D. P. Wagner,* Illinois Tool Works, Inc., Elgin, Illinois
*F. F. Weingruber,* Westinghouse Electric Corporation, Pittsburgh, Pennsylvania
*L. J. Zanin,* Elco Industries, Inc., Rockford, Illinois



Copyright ASME International
Provided by IHS under license with ASME
No reproduction or networking permitted without license from IHS
Not for Resale

**Personnel of Subgroup No. 1**
**on Tapping Screws**

A. R. Machell, *Chairman*
R. B. Belford
A. A. Bien
R. M. Byrne
C. P. Coldren
R. Corrette
J. F. Dickson
C. O. Franklin
E. R. Friesth
G. A. Gobb
C. Gordon
R. C. Kasperski
J. B. Levy
D. T. Lipari
J. C. McMurray
H. G. Muenchinger
A. J. Parker
R. Seymour
S. Belcinski (Alternate)
D. Wagner
L. J. Zanin

**Personnel of Subgroup No. 2**
**on Quality Levels**

K. D. Ringland, *Chairman*
S. C. Adamek
R. B. Belford
R. M. Byrne
H. Haefeli
A. J. Parker
J. Peck
F. Simmons

**Personnel of Subgroup No. 3**
**on Screw Head Dimensions and Tolerances**

A. R. Machell, *Chairman*
S. C. Adamek
R. B. Belford
R. M. Byrne
P. H. Foytho
F. E. Graves
A. J. Parker
J. C. Peck
R. Seymour
S. Belcinski (Alternate)
F. Simmons
J. Grady (Alternate)
D. Wagner
F. Weingruber
L. J. Zanin

**Personnel of Subgroup No. 4**
**Editorial**

C. F. Schaening, *Chairman*
R. B. Belford
R. M. Byrne
C. O. Franklin
G. A. Gobb
H. Haefeli
H. G. Muenchinger
R. Seymour
S. Belcinski (Alternate)
F. Simmons
J. Grady (Alternate)

**Personnel of Subgroup No. 5**
**on Metallurgical and Mechanical**
**Properties of Screws**

C. Gordon, *Chairman*
J. Berger
H. W. Ellison
G. A. Gobb
H. Haefeli
A. R. Machell
H. G. Muenchinger
D. Wagner



Copyright ASME International
Provided by IHS under license with ASME
No reproduction or networking permitted without license from IHS
Not for Resale

## CONTENTS


Page

Introductory Notes ..... 1

General Data ..... 2

Dimensional Tables

Threads and Body Diameters for Wood Screws, Table 1 ..... 4

Flat Countersunk Head

Slotted, Table 2 ..... 5

Type I Recessed, Table 3 ..... 6

Type IA Recessed, Table 4 ..... 7

Type II Recessed, Table 5 ..... 8

Oval Countersunk Head

Slotted, Table 6 ..... 9

Type I Recessed, Table 7 ..... 10

Type IA Recessed, Table 8 ..... 11

Type II Recessed, Table 9 ..... 12

Pan Head

Slotted, Table 10 ..... 13

Type I Recessed, Table 11 ..... 14

Type IA Recessed, Table 12 ..... 15

Type II Recessed, Table 13 ..... 16

Appendix I - Penetration Gaging of Recessed Heads ..... 17

Appendix II - Wobble Gaging of Recessed Heads ..... 21

Appendix III - Formulas for Dimensions ..... 23

Appendix IV - Dimensions of Round Heads ..... 25




Copyright ASME International
Provided by IHS under license with ASME
No reproduction or networking permitted without license from IHS
Not for Resale

AMERICAN NATIONAL STANDARD

# WOOD SCREWS
(INCH SERIES)

## 1 INTRODUCTORY NOTES

### 1.1 Scope

**1.1.1** This standard covers the complete general and dimensional data for the various types of slotted and recessed head wood screws recognized as "American National Standard." Also included are appendixes which provide specifications and instructions for penetration gaging and wobble gaging of recessed head screws; documentation for screw head types relegated to non-preferred status; and formulas on which dimensional data are based. It shall be understood, however, that where questions arise concerning acceptance of product, the dimensions given in the tables shall govern over recalculation by formula.

**1.1.2** The inclusion of dimensional data in this standard is not intended to imply that all of the products described are stock production sizes. Consumers should consult with manufacturers concerning the availability of products.

### 1.2 Head Types

The head types covered by this standard and the appendices include those commonly recognized as being applicable to wood screws and are enumerated and described in the following:

**1.2.1 Flat Countersunk Head.** The flat countersunk head shall have a flat top surface and a conical bearing surface with a head angle of approximately 82 deg. Dimensions are given in Tables 2 through 5.

**1.2.2 Oval Countersunk Head.** The oval countersunk head shall have a rounded top surface and a conical bearing surface with a head angle of approximately 82 deg. Dimensions are given in Tables 6 through 9.

**1.2.3 Pan Head.** The slotted pan head shall have a flat or slightly rounded top surface rounding into cylindrical sides and a flat bearing surface. The recessed pan head shall have a rounded top surface blending into cylindrical sides and a flat bearing surface. Dimensions are given in Tables 10 through 13.

**1.2.4 Round Head.** The round head shall have a semi-elliptical top surface and a flat bearing surface. In recognition of superior slot driving characteristics of pan head screws and the overlap in the dimensions of cross recessed pan heads and round heads, it is recommended that round heads be designated as non-preferred and replaced by pan heads in new applications. Dimensions for round heads are documented in Appendix IV.

### 1.3 Dimensions

All dimensions in this standard are given in inches, unless stated otherwise.

### 1.4 Options

Options, where specified, shall be at the discretion of the manufacturer unless otherwise agreed upon by the manufacturer and the purchaser.

### 1.5 Terminology

For definitions of terms relating to fasteners or component features thereof used in this standard, refer to American National Standard, Glossary of Terms for Mechanical Fasteners, ANSI B18.12.

### 1.6 Related Standards

It should be noted that standards for machine screws, cap and set screws, tapping screws, drive screws, washers and other related fasteners are published under separate cover as listed on the back sheet of this standard.

### 1.7 Designation

Wood screws shall be designated by the following data in the sequence shown: Nominal size (number or decimal equivalent); product name, including head style and driving provision (slotted or recessed by type of recess); material; and protective or decorative finish, if required. See examples below:

10 x 1 1/2 Slotted Flat Countersunk Head Wood Screw, Steel

.164 x .75 Type 1 Cross Recessed Pan Head Wood Screw, Brass, Chromium Plated

Since screws may be furnished with either cut or rolled threads, unless designated otherwise, users having a specific preference should so indicate by adding "Cut Threaded" or "Roll Threaded" at end of the normal designation as depicted in the following example:

10 x 1 1/4 Slotted Oval Countersunk Head Wood Screw, Steel, Zinc Plated, Cut Threaded



Copyright ASME International
Provided by IHS under license with ASME
No reproduction or networking permitted without license from IHS
Not for Resale

## 2 GENERAL DATA

### 2.1 Heads

**2.1.1 Head Height.** All dimensions pertaining to head height specified in the dimensional tables shall be measured parallel to the axis of screw and those relating to the top of head shall represent a metal to metal measurement. In other words, any truncation of rounded head contours due to the slot or recess shall not be considered part of the head height.

Total or overall head heights shall be measured from the top of the head to the plane of the bearing surface for pan and round heads, and to the junction of the conical bearing surface with the basic screw diameter for flat or oval countersunk heads.

Head side height shall be measured from the intersection of the top surface of head with the head diameter to the junction of the conical bearing surface with the basic screw diameter for oval countersunk heads.

On countersunk heads, the junction of conical bearing surface with the basic screw diameter may not necessarily be the same as the actual junction of head with shank and the head height delineating the conical bearing surface is a reference dimension.

**2.1.2 Depth of Recess.** The depth of recess in recessed head screws shall be measured, parallel to the axis of screw, from the intersection of the maximum diameter of the recess with the head surface to the bottom of the recess.

Recess penetration gaging depth values are included in the respective dimensional tables and the method of gaging and specifications for gages are covered in Appendix I.

Recess wobble gages, gaging procedures and permissible limits are given in Appendix II.

**2.1.3 Depth of Slot.** The depth of slot in slotted head screws shall be measured, parallel to the axis of screw, from the top of the head to the intersection of the bottom of the slot with the head surface or the bearing surface.

The bottom of slot over the length of the slot shall be flat to concave within the depth of an arc produced by a 1.0 in. minimum radius. The sides of the slot shall not be tapered or rounded to such an extent that driveability is affected.

**2.1.4 Feature Positional Tolerances.** The positional relationship of the heads and driving provisions of screws with respect to the shanks of screws (formerly defined as eccentricity) shall be as follows:

2.1.4.1 True Position of Head. The axis of the head shall be located at true position relative to the axis of the screw shank within a tolerance zone having a diameter equivalent to 12 percent of the specified maximum head diameter regardless of feature size.

2.1.4.2 True Position of Recess. The recess in cross recessed head wood screws shall be located at true position relative to the axis of the screw shank within a tolerance zone having a diameter equivalent to 12 percent of the basic screw diameter or 0.030 in., whichever is greater, regardless of feature size.

2.1.4.3 True Position of Slot. The slot in slotted head wood screws shall be located at true position relative to the axis of the screw shank within a tolerance zone having a diameter equivalent to 12 percent of the basic screw diameter or 0.030 in., whichever is greater.

### 2.2 Length

**2.2.1 Measurement.** The length of screw shall be measured, parallel to the axis of screw, from the extreme point to the plane of the bearing surface for screws having flat bearing surface type heads, and to the intersection of the top surface of head with the head diameter for screws having countersunk type heads.

**2.2.2 Standard Lengths.** Wood screws are normally available in the nominal length increments shown opposite the respective nominal screw length ranges in the tabulation below:

**2.2.3 Tolerance on Length.** The tolerance on the length of wood screws shall be as tabulated below:

| Nominal Screw Length | Nominal Length Increment | Tolerance on Length | |
|---|---|---|---|
| | | Plus | Minus |
| Up to 5/8 in., incl | 1/8 | 0 | 0.03 |
| Over 5/8 to 1 in., incl | 1/8 | 0 | 0.05 |
| Over 1 to 1 1/2 in., incl | 1/4 | 0 | 0.05 |
| Over 1 1/2 to 2 3/4 in., incl | 1/4 | 0 | 0.06 |
| Over 2 3/4 in | 1/2 | 0 | 0.09 |



Copyright ASME International
Provided by IHS under license with ASME
No reproduction or networking permitted without license from IHS
Not for Resale

### 2.3 Threads and Point

Wood screws shall have coarse pitch spaced threads and a gimlet point. The threads may be either cut or rolled (cold formed) at manufacturer's option, unless designated otherwise by the purchaser in accordance with Paragraph 1.7. Dimensional data and other features pertaining to wood screw threads are presented in Table 1.

### 2.4 Length of Thread

**2.4.1 Cut Thread Screws.** The length of the thread on wood screws having cut threads shall be equivalent to approximately two-thirds of the nominal length of the screw.

**2.4.2 Rolled Thread Screws.** Rolled thread wood screws shall have a length of thread equivalent to at least four times the basic screw diameter or two-thirds of the nominal screw length, whichever is greater. Screws of nominal lengths which are too short to accommodate the minimum thread length shall have threads extending as close to the underside of the head as practicable.

### 2.5 Diameter of Body

The diameter of body shall be within the limits specified in Table 1 for screws of the respective thread types.

### 2.6 Material

Wood screws shall be supplied in steel, corrosion resistant steel, brass, aluminum alloy, or other materials as designated by the purchaser. Unless otherwise specified, no chemical or physical requirements shall apply. Screws may be heat treated at the option of the purchaser or the manufacturer to develop adequate torsional strength for the intended application.

### 2.7 Finish

Unless otherwise specified, wood screws shall be supplied with a natural (as processed) finish, unplated or uncoated.

### 2.8 Workmanship

Wood screws shall be free from burrs, seams, laps, scale or irregular surfaces that might affect their serviceability.



Copyright ASME International
Provided by IHS under license with ASME
No reproduction or networking permitted without license from IHS

Not for Resale




**THREAD DEPTH**
*(ALL TYPES)*

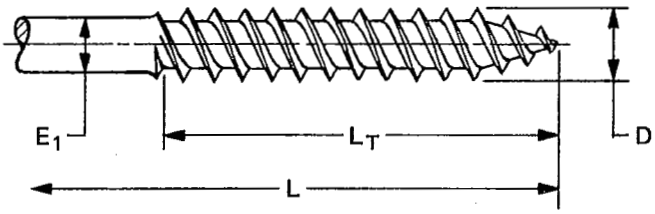


DOUBLE LEAD

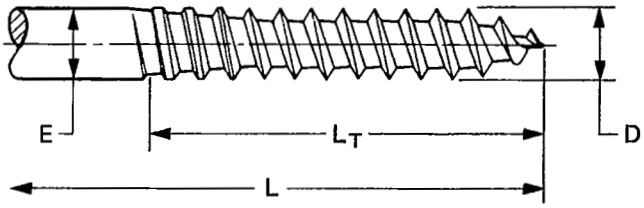


SINGLE LEAD

**CUT THREAD TYPE**[3]

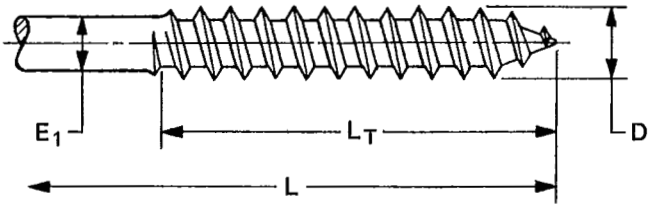


SINGLE LEAD

**ROLLED THREAD TYPES**[4]

**Table 1 Dimensions of Threads and Body Diameters for Wood Screws**

| Nominal Size[1] or Basic Screw Diameter | Threads per Inch[2] | D | | E | | $E_1$ | | F |
|---|---|---|---|---|---|---|---|---|
| | | Thread Major Diameter | | Body Diameter (Cut Thread) | | Body Diameter (Rolled Thread) | | Thread Depth |
| | | Max | Min | Max | Min | Max | Min | Min |
| 0 0.060 | 32 | 0.064 | 0.053 | 0.064 | 0.053 | 0.055 | 0.044 | 0.010 |
| 1 0.073 | 28 | 0.077 | 0.066 | 0.077 | 0.066 | 0.066 | 0.055 | 0.010 |
| 2 0.086 | 26 | 0.090 | 0.079 | 0.090 | 0.079 | 0.075 | 0.064 | 0.010 |
| 3 0.099 | 24 | 0.103 | 0.092 | 0.103 | 0.092 | 0.086 | 0.075 | 0.014 |
| 4 0.112 | 22 | 0.116 | 0.105 | 0.116 | 0.105 | 0.095 | 0.084 | 0.016 |
| 5 0.125 | 20 | 0.129 | 0.118 | 0.129 | 0.118 | 0.107 | 0.096 | 0.018 |
| 6 0.138 | 18 | 0.142 | 0.131 | 0.142 | 0.131 | 0.118 | 0.107 | 0.020 |
| 7 0.151 | 16 | 0.155 | 0.144 | 0.155 | 0.144 | 0.127 | 0.116 | 0.022 |
| 8 0.164 | 15 | 0.168 | 0.157 | 0.168 | 0.157 | 0.136 | 0.125 | 0.023 |
| 9 0.177 | 14 | 0.181 | 0.170 | 0.181 | 0.170 | 0.147 | 0.136 | 0.026 |
| 10 0.190 | 13 | 0.194 | 0.183 | 0.194 | 0.183 | 0.157 | 0.146 | 0.030 |
| 12 0.216 | 11 | 0.220 | 0.209 | 0.220 | 0.209 | 0.176 | 0.165 | 0.031 |
| 14 0.242 | 10 | 0.246 | 0.235 | 0.246 | 0.235 | 0.201 | 0.190 | 0.035 |
| 16 0.268 | 9 | 0.272 | 0.261 | 0.272 | 0.261 | 0.214 | 0.203 | 0.038 |
| 18 0.294 | 8 | 0.298 | 0.287 | 0.298 | 0.287 | 0.237 | 0.226 | 0.042 |
| 20 0.320 | 8 | 0.324 | 0.313 | 0.324 | 0.313 | 0.260 | 0.249 | 0.046 |
| 24 0.372 | 7 | 0.376 | 0.365 | 0.376 | 0.365 | 0.303 | 0.292 | 0.050 |

1 Where specifying nominal size in decimals, zeros preceding the decimal shall be omitted.

2 The maximum permissible variation in the number of threads per inch shall be plus or minus 10 per cent of that which is tabulated for the respective screw size.

3 Cut thread type screws are usually supplied with single lead threads for all screw lengths.

4 Rolled thread type screws may be supplied with either single lead or double lead threads at the option of the manufacturer, however, single lead threads are preferred where the nominal length of the screw is shorter than 4 times the basic screw diameter. Points shall be sharp, however, no extrusion of excess material beyond the apex of point resulting from thread rolling shall be permissible.

For additional requirements refer to General Data on Pages 2 and 3.



Copyright ASME International
Provided by IHS under license with ASME
No reproduction or networking permitted without license from IHS

Not for Resale

| SLOTTED |
| --- |
| **FLAT** |

Type of Head

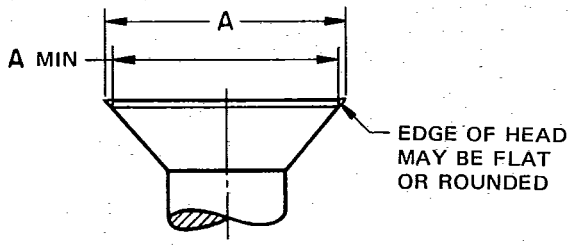


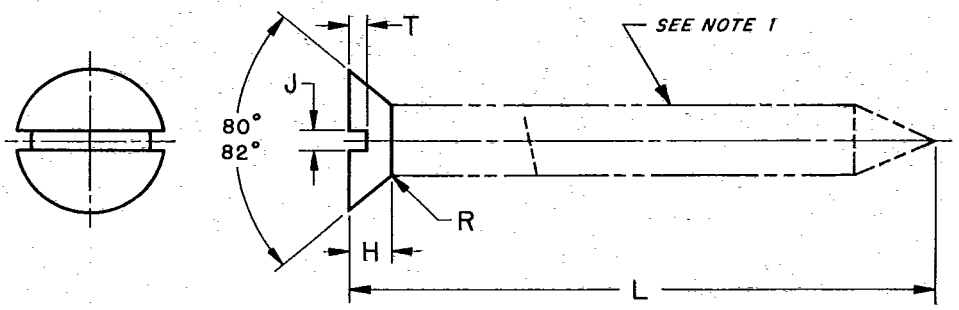


**Table 2 Dimensions of Slotted Flat Countersunk Head Wood Screws**

| Nominal Size[2] or Basic Screw Diameter | A | | H[3] | J | | T | | R |
| --- | --- | --- | --- | --- | --- | --- | --- | --- |
| | Head Diameter | | Head Height | Slot Width | | Slot Depth | | Fillet Radius |
| | Max, Edge Sharp | Min, Edge Rounded or Flat | Ref | Max | Min | Max | Min | Max |
| 0 0.060 | 0.119 | 0.099 | 0.035 | 0.023 | 0.016 | 0.015 | 0.010 | 0.031 |
| 1 0.073 | 0.146 | 0.123 | 0.043 | 0.026 | 0.019 | 0.019 | 0.012 | 0.031 |
| 2 0.086 | 0.172 | 0.147 | 0.051 | 0.031 | 0.023 | 0.023 | 0.015 | 0.031 |
| 3 0.099 | 0.199 | 0.171 | 0.059 | 0.035 | 0.027 | 0.027 | 0.017 | 0.031 |
| 4 0.112 | 0.225 | 0.195 | 0.067 | 0.039 | 0.031 | 0.030 | 0.020 | 0.031 |
| 5 0.125 | 0.252 | 0.220 | 0.075 | 0.043 | 0.035 | 0.034 | 0.022 | 0.062 |
| 6 0.138 | 0.279 | 0.244 | 0.083 | 0.048 | 0.039 | 0.038 | 0.024 | 0.062 |
| 7 0.151 | 0.305 | 0.268 | 0.091 | 0.048 | 0.039 | 0.041 | 0.027 | 0.062 |
| 8 0.164 | 0.332 | 0.292 | 0.100 | 0.054 | 0.045 | 0.045 | 0.029 | 0.062 |
| 9 0.177 | 0.358 | 0.316 | 0.108 | 0.054 | 0.045 | 0.049 | 0.032 | 0.062 |
| 10 0.190 | 0.385 | 0.340 | 0.116 | 0.060 | 0.050 | 0.053 | 0.034 | 0.062 |
| 12 0.216 | 0.438 | 0.389 | 0.132 | 0.067 | 0.056 | 0.060 | 0.039 | 0.062 |
| 14 0.242 | 0.507 | 0.452 | 0.153 | 0.075 | 0.064 | 0.070 | 0.046 | 0.093 |
| 16 0.268 | 0.544 | 0.485 | 0.164 | 0.075 | 0.064 | 0.075 | 0.049 | 0.093 |
| 18 0.294 | 0.635 | 0.568 | 0.191 | 0.084 | 0.072 | 0.083 | 0.054 | 0.093 |
| 20 0.320 | 0.650 | 0.582 | 0.196 | 0.084 | 0.072 | 0.090 | 0.059 | 0.093 |
| 24 0.372 | 0.762 | 0.685 | 0.230 | 0.094 | 0.081 | 0.106 | 0.070 | 0.093 |

1 See Table 1 for dimensions applicable to thread and body features.
2 Where specifying nominal size in decimals, zeros preceding the decimal shall be omitted.
3 Tabulated values determined from formula for maximum H, Appendix III.

For additional requirements refer to General Data on Pages 2 and 3.



Copyright ASME International
Provided by IHS under license with ASME
No reproduction or networking permitted without license from IHS
Not for Resale

**TYPE I RECESS**

**FLAT**



Type of Head

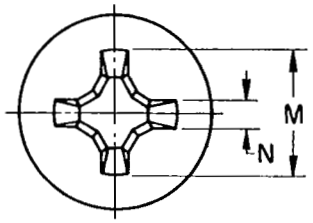


This type of recess has a large center opening, tapered wings, and blunt bottom, with all edges relieved or rounded.

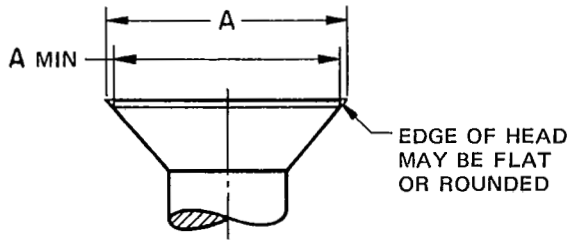


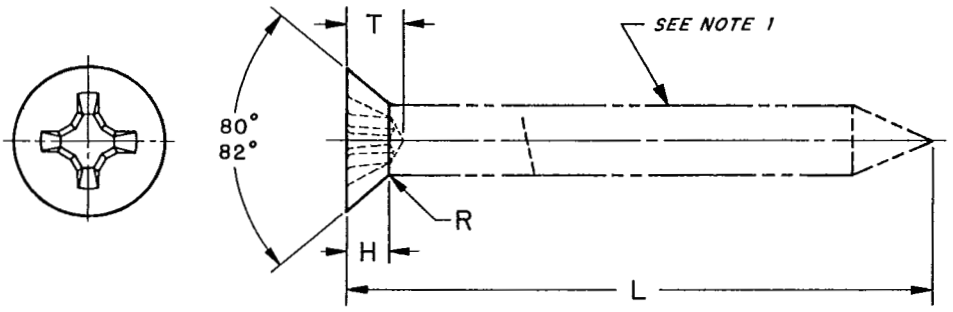


**Table 3 Dimensions of Type I Cross Recessed Flat Countersunk Head Wood Screws**

| Nominal Size[2] or Basic Screw Diameter | A | | H[3] | M | | T | | N | Driver Size | Recess Penetration Gaging Depth | | R |
|---|---|---|---|---|---|---|---|---|---|---|---|---|
| | Head Diameter | | Head Height | Recess Diameter | | Recess Depth | | Recess Width | | | | Fillet Radius |
| | Max, Edge Sharp | Min, Edge Rounded or Flat | Ref | Max | Min | Max | Min | Min | | Max | Min | Max |
| 0 0.060 | 0.119 | 0.099 | 0.035 | 0.069 | 0.056 | 0.043 | 0.027 | 0.014 | 0 | 0.036 | 0.020 | 0.031 |
| 1 0.073 | 0.146 | 0.123 | 0.043 | 0.077 | 0.064 | 0.051 | 0.035 | 0.015 | 0 | 0.044 | 0.028 | 0.031 |
| 2 0.086 | 0.172 | 0.147 | 0.051 | 0.102 | 0.089 | 0.063 | 0.047 | 0.017 | 1 | 0.056 | 0.040 | 0.031 |
| 3 0.099 | 0.199 | 0.171 | 0.059 | 0.107 | 0.094 | 0.068 | 0.052 | 0.018 | 1 | 0.061 | 0.045 | 0.031 |
| 4 0.112 | 0.225 | 0.195 | 0.067 | 0.128 | 0.115 | 0.089 | 0.073 | 0.018 | 1 | 0.082 | 0.066 | 0.031 |
| 5 0.125 | 0.252 | 0.220 | 0.075 | 0.154 | 0.141 | 0.086 | 0.063 | 0.027 | 2 | 0.075 | 0.052 | 0.062 |
| 6 0.138 | 0.279 | 0.244 | 0.083 | 0.174 | 0.161 | 0.106 | 0.083 | 0.029 | 2 | 0.095 | 0.072 | 0.062 |
| 7 0.151 | 0.305 | 0.268 | 0.091 | 0.189 | 0.176 | 0.121 | 0.098 | 0.030 | 2 | 0.110 | 0.087 | 0.062 |
| 8 0.164 | 0.332 | 0.292 | 0.100 | 0.204 | 0.191 | 0.136 | 0.113 | 0.032 | 2 | 0.125 | 0.102 | 0.062 |
| 9 0.177 | 0.358 | 0.316 | 0.108 | 0.214 | 0.201 | 0.146 | 0.123 | 0.033 | 2 | 0.135 | 0.112 | 0.062 |
| 10 0.190 | 0.385 | 0.340 | 0.116 | 0.258 | 0.245 | 0.146 | 0.123 | 0.034 | 3 | 0.129 | 0.106 | 0.062 |
| 12 0.216 | 0.438 | 0.389 | 0.132 | 0.283 | 0.270 | 0.171 | 0.148 | 0.036 | 3 | 0.154 | 0.131 | 0.062 |
| 14 0.242 | 0.507 | 0.452 | 0.153 | 0.283 | 0.270 | 0.171 | 0.148 | 0.036 | 3 | 0.154 | 0.131 | 0.093 |
| 16 0.268 | 0.544 | 0.485 | 0.164 | 0.303 | 0.290 | 0.191 | 0.168 | 0.039 | 3 | 0.174 | 0.151 | 0.093 |
| 18 0.294 | 0.635 | 0.568 | 0.191 | 0.365 | 0.352 | 0.216 | 0.194 | 0.061 | 4 | 0.196 | 0.174 | 0.093 |
| 20 0.320 | 0.650 | 0.582 | 0.196 | 0.378 | 0.365 | 0.230 | 0.208 | 0.062 | 4 | 0.210 | 0.188 | 0.093 |
| 24 0.372 | 0.762 | 0.685 | 0.230 | 0.393 | 0.380 | 0.245 | 0.223 | 0.065 | 4 | 0.225 | 0.203 | 0.093 |

1 See Table 1 for dimensions applicable to thread and body features.

2 Where specifying nominal size in decimals, zeros preceding the decimal shall be omitted.

3 Tabulated values determined from formula for maximum H, Appendix III.

For additional requirements refer to General Data on Pages 2 and 3.



Copyright ASME International
Provided by IHS under license with ASME
No reproduction or networking permitted without license from IHS

Not for Resale

AMERICAN NATIONAL STANDARD
WOOD SCREWS (INCH SERIES)

ANSI B18.6.1–1981

**TYPE IA RECESS**

**FLAT**

Type of Head

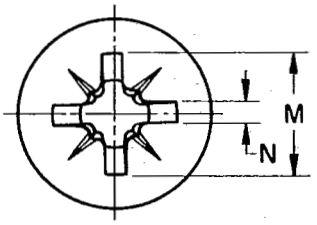


This type of recess has a large center opening, wide straight wings, and blunt bottom, with all edges relieved or rounded.

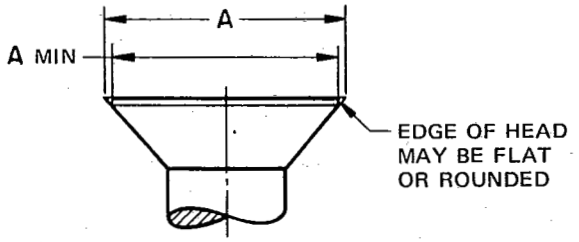


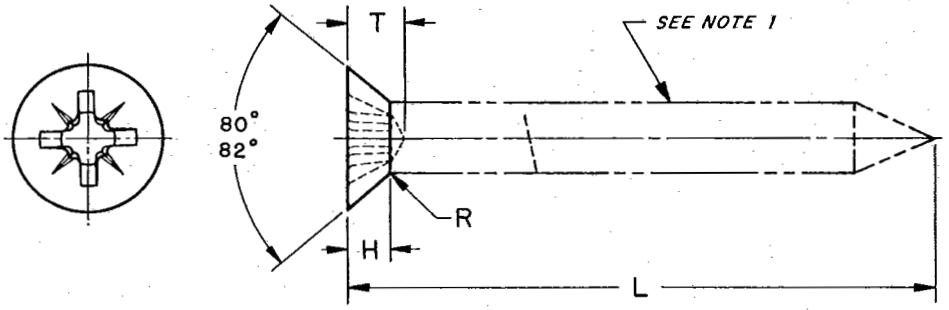


**Table 4 Dimensions of Type IA Cross Recessed Flat Countersunk Head Wood Screws**

| Nominal Size[2] or Basic Screw Diameter | A | | H[3] | M | | T | | N | Driver Size | Recess Penetration Gaging Depth | | R |
|---|---|---|---|---|---|---|---|---|---|---|---|---|
| | Head Diameter | | Head Height | Recess Diameter | | Recess Depth | | Recess Width | | | | Fillet Radius |
| | Max, Edge Sharp | Min, Edge Rounded or Flat | Ref | Max | Min | Max | Min | Min | | Max | Min | Max |
| 0 0.060 | 0.119 | 0.099 | 0.035 | 0.069 | 0.056 | 0.044 | 0.028 | 0.018 | 0 | 0.037 | 0.021 | 0.031 |
| 1 0.073 | 0.146 | 0.123 | 0.043 | 0.077 | 0.064 | 0.052 | 0.036 | 0.018 | 0 | 0.045 | 0.029 | 0.031 |
| 2 0.086 | 0.172 | 0.147 | 0.051 | 0.102 | 0.089 | 0.063 | 0.047 | 0.029 | 1 | 0.053 | 0.037 | 0.031 |
| 3 0.099 | 0.199 | 0.171 | 0.059 | 0.107 | 0.094 | 0.068 | 0.052 | 0.029 | 1 | 0.058 | 0.042 | 0.031 |
| 4 0.112 | 0.225 | 0.195 | 0.067 | 0.128 | 0.115 | 0.089 | 0.073 | 0.030 | 1 | 0.079 | 0.063 | 0.031 |
| 5 0.125 | 0.252 | 0.220 | 0.075 | 0.154 | 0.141 | 0.086 | 0.068 | 0.041 | 2 | 0.071 | 0.053 | 0.062 |
| 6 0.138 | 0.279 | 0.244 | 0.083 | 0.174 | 0.161 | 0.107 | 0.089 | 0.041 | 2 | 0.091 | 0.073 | 0.062 |
| 7 0.151 | 0.305 | 0.268 | 0.091 | 0.189 | 0.176 | 0.121 | 0.103 | 0.041 | 2 | 0.107 | 0.089 | 0.062 |
| 8 0.164 | 0.332 | 0.292 | 0.100 | 0.204 | 0.191 | 0.136 | 0.118 | 0.041 | 2 | 0.122 | 0.104 | 0.062 |
| 9 0.177 | 0.358 | 0.316 | 0.108 | 0.214 | 0.201 | 0.148 | 0.130 | 0.042 | 2 | 0.132 | 0.114 | 0.062 |
| 10 0.190 | 0.385 | 0.340 | 0.116 | 0.258 | 0.245 | 0.146 | 0.128 | 0.056 | 3 | 0.125 | 0.107 | 0.062 |
| 12 0.216 | 0.438 | 0.389 | 0.132 | 0.283 | 0.270 | 0.173 | 0.155 | 0.057 | 3 | 0.151 | 0.133 | 0.062 |
| 14 0.242 | 0.507 | 0.452 | 0.153 | 0.283 | 0.270 | 0.173 | 0.155 | 0.057 | 3 | 0.151 | 0.133 | 0.093 |
| 16 0.268 | 0.544 | 0.485 | 0.164 | 0.303 | 0.290 | 0.193 | 0.175 | 0.057 | 3 | 0.171 | 0.153 | 0.093 |
| 18 0.294 | 0.635 | 0.568 | 0.191 | 0.365 | 0.352 | 0.220 | 0.202 | 0.086 | 4 | 0.193 | 0.175 | 0.093 |
| 20 0.320 | 0.650 | 0.582 | 0.196 | 0.378 | 0.365 | 0.233 | 0.215 | 0.086 | 4 | 0.206 | 0.188 | 0.093 |
| 24 0.372 | 0.762 | 0.685 | 0.230 | 0.393 | 0.380 | 0.248 | 0.230 | 0.086 | 4 | 0.222 | 0.204 | 0.093 |

1 See Table 1 for dimensions applicable to thread and body features.
2 Where specifying nominal size in decimals, zeros preceding the decimal shall be omitted.
3 Tabulated values determined from formula for maximum H, Appendix III.

For additional requirements refer to General Data on Pages 2 and 3.



Copyright ASME International
Provided by IHS under license with ASME
No reproduction or networking permitted without license from IHS
Not for Resale

**TYPE II RECESS**

**FLAT**



Type of Head

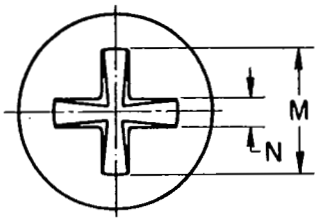


This type of recess consists of two intersecting slots with parallel sides converging to a slightly truncated apex at bottom of recess.

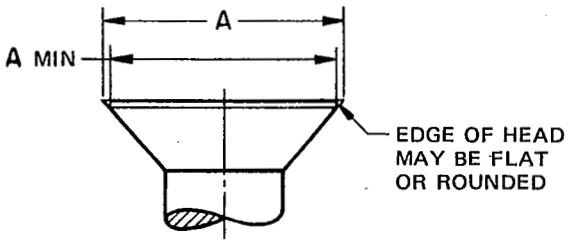


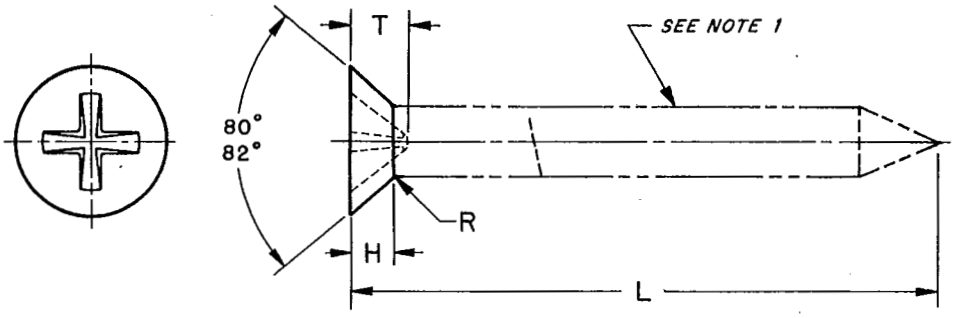


**Table 5 Dimensions of Type II Cross Recessed Flat Countersunk Head Wood Screws**

| Nominal Size[2] or Basic Screw Diameter | A Head Diameter Max, Edge Sharp | A Head Diameter Min, Edge Rounded or Flat | H[3] Head Height Ref | M Recess Diameter Max | M Recess Diameter Min | T Recess Depth Max | T Recess Depth Min | N Recess Width Min | Driver Size | Recess Penetration Gaging Depth Max | Recess Penetration Gaging Depth Min | R Fillet Radius Max |
|---|---|---|---|---|---|---|---|---|---|---|---|---|
| 0 0.060 | 0.119 | 0.099 | 0.035 | 0.083 | 0.073 | 0.042 | 0.031 | 0.021 | Point same on all drivers | * | * | 0.031 |
| 1 0.073 | 0.146 | 0.123 | 0.043 | 0.097 | 0.086 | 0.054 | 0.042 | 0.024 | | * | * | 0.031 |
| 2 0.086 | 0.172 | 0.147 | 0.051 | 0.120 | 0.109 | 0.066 | 0.054 | 0.027 | | 0.040 | 0.029 | 0.031 |
| 3 0.099 | 0.199 | 0.171 | 0.059 | 0.139 | 0.127 | 0.079 | 0.066 | 0.030 | | 0.053 | 0.041 | 0.031 |
| 4 0.112 | 0.225 | 0.195 | 0.067 | 0.157 | 0.145 | 0.088 | 0.075 | 0.032 | | 0.064 | 0.052 | 0.031 |
| 5 0.125 | 0.252 | 0.220 | 0.075 | 0.176 | 0.162 | 0.101 | 0.087 | 0.035 | | 0.077 | 0.064 | 0.062 |
| 6 0.138 | 0.279 | 0.244 | 0.083 | 0.195 | 0.180 | 0.113 | 0.098 | 0.038 | | 0.089 | 0.075 | 0.062 |
| 7 0.151 | 0.305 | 0.268 | 0.091 | 0.213 | 0.198 | 0.125 | 0.110 | 0.040 | | 0.101 | 0.087 | 0.062 |
| 8 0.164 | 0.332 | 0.292 | 0.100 | 0.232 | 0.216 | 0.132 | 0.117 | 0.043 | | 0.113 | 0.099 | 0.062 |
| 9 0.177 | 0.358 | 0.316 | 0.108 | 0.251 | 0.234 | 0.145 | 0.128 | 0.046 | | 0.126 | 0.110 | 0.062 |
| 10 0.190 | 0.385 | 0.340 | 0.116 | 0.269 | 0.251 | 0.156 | 0.140 | 0.048 | | 0.137 | 0.122 | 0.062 |
| 12 0.216 | 0.438 | 0.389 | 0.132 | 0.307 | 0.287 | 0.181 | 0.163 | 0.054 | | 0.162 | 0.145 | 0.062 |
| 14 0.242 | 0.507 | 0.452 | 0.153 | 0.355 | 0.344 | 0.204 | 0.186 | 0.061 | | 0.193 | 0.176 | 0.093 |
| 16 0.268 | 0.544 | 0.485 | 0.164 | 0.381 | 0.358 | 0.221 | 0.201 | 0.064 | | 0.210 | 0.191 | 0.093 |
| 18 0.294 | 0.635 | 0.568 | 0.191 | 0.444 | 0.420 | 0.262 | 0.242 | 0.074 | | 0.251 | 0.232 | 0.093 |
| 20 0.320 | 0.650 | 0.582 | 0.196 | 0.455 | 0.430 | 0.269 | 0.248 | 0.075 | | 0.258 | 0.238 | 0.093 |
| 24 0.372 | 0.762 | 0.685 | 0.230 | 0.523 | 0.495 | 0.314 | 0.291 | 0.086 | | 0.303 | 0.281 | 0.093 |

1 See Table 1 for dimensions applicable to thread and body features.
2 Where specifying nominal size in decimals, zeros preceding the decimal shall be omitted.
3 Tabulated values determined from formula for maximum H, Appendix III.
* Not practical to gage.

For additional requirements refer to General Data on Pages 2 and 3.



Copyright ASME International
Provided by IHS under license with ASME
No reproduction or networking permitted without license from IHS
Not for Resale

**SLOTTED**

**OVAL**

Type of Head

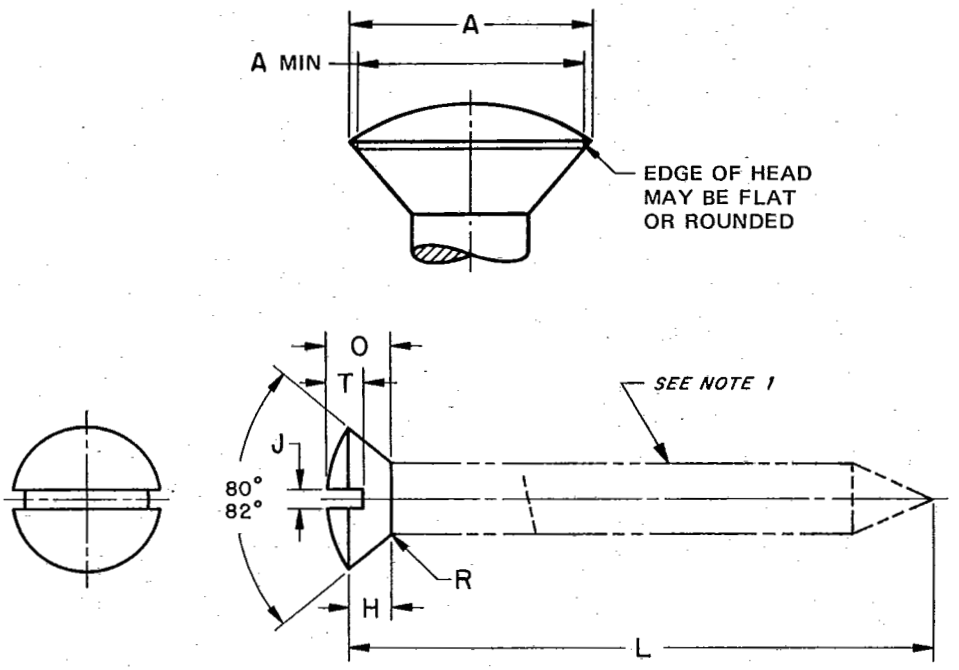


**Table 6 Dimensions of Slotted Oval Countersunk Head Wood Screws**

| Nominal Size[2] or Basic Screw Diameter | A | | H[3] | O | | J | | T | | R |
|---|---|---|---|---|---|---|---|---|---|---|
| | Head Diameter | | Head Side Height | Total Head Height | | Slot Width | | Slot Depth | | Fillet Radius |
| | Max, Edge Sharp | Min, Edge Rounded or Flat | Ref | Max | Min | Max | Min | Max | Min | Max |
| 0 0.060 | 0.119 | 0.099 | 0.035 | 0.056 | 0.041 | 0.023 | 0.016 | 0.030 | 0.025 | 0.031 |
| 1 0.073 | 0.146 | 0.123 | 0.043 | 0.068 | 0.052 | 0.026 | 0.019 | 0.038 | 0.031 | 0.031 |
| 2 0.086 | 0.172 | 0.147 | 0.051 | 0.080 | 0.063 | 0.031 | 0.023 | 0.045 | 0.037 | 0.031 |
| 3 0.099 | 0.199 | 0.171 | 0.059 | 0.092 | 0.073 | 0.035 | 0.027 | 0.052 | 0.043 | 0.031 |
| 4 0.112 | 0.225 | 0.195 | 0.067 | 0.104 | 0.084 | 0.039 | 0.031 | 0.059 | 0.049 | 0.031 |
| 5 0.125 | 0.252 | 0.220 | 0.075 | 0.116 | 0.095 | 0.043 | 0.035 | 0.067 | 0.055 | 0.062 |
| 6 0.138 | 0.279 | 0.244 | 0.083 | 0.128 | 0.105 | 0.048 | 0.039 | 0.074 | 0.060 | 0.062 |
| 7 0.151 | 0.305 | 0.268 | 0.091 | 0.140 | 0.116 | 0.048 | 0.039 | 0.081 | 0.066 | 0.062 |
| 8 0.164 | 0.332 | 0.292 | 0.100 | 0.152 | 0.126 | 0.054 | 0.045 | 0.088 | 0.072 | 0.062 |
| 9 0.177 | 0.358 | 0.316 | 0.108 | 0.164 | 0.137 | 0.054 | 0.045 | 0.095 | 0.078 | 0.062 |
| 10 0.190 | 0.385 | 0.340 | 0.116 | 0.176 | 0.148 | 0.060 | 0.050 | 0.103 | 0.084 | 0.062 |
| 12 0.216 | 0.438 | 0.389 | 0.132 | 0.200 | 0.169 | 0.067 | 0.056 | 0.117 | 0.096 | 0.062 |
| 14 0.242 | 0.507 | 0.452 | 0.153 | 0.232 | 0.197 | 0.075 | 0.064 | 0.136 | 0.112 | 0.093 |
| 16 0.268 | 0.544 | 0.485 | 0.164 | 0.248 | 0.212 | 0.075 | 0.064 | 0.146 | 0.120 | 0.093 |
| 18 0.294 | 0.635 | 0.568 | 0.191 | 0.290 | 0.249 | 0.084 | 0.072 | 0.171 | 0.141 | 0.093 |
| 20 0.320 | 0.650 | 0.582 | 0.196 | 0.296 | 0.254 | 0.084 | 0.072 | 0.175 | 0.144 | 0.093 |
| 24 0.372 | 0.762 | 0.685 | 0.230 | 0.347 | 0.300 | 0.094 | 0.081 | 0.204 | 0.168 | 0.093 |

1 See Table 1 for dimensions applicable to thread and body features.
2 Where specifying nominal size in decimals, zeros preceding the decimal shall be omitted.
3 Tabulated values determined from formula for maximum H, Appendix III.

For additional requirements refer to General Data on Pages 2 and 3.



Copyright ASME International
Provided by IHS under license with ASME
No reproduction or networking permitted without license from IHS
Not for Resale

**TYPE I RECESS**

**OVAL**

AMERICAN NATIONAL STANDARD
WOOD SCREWS (INCH SERIES)



Type of Head

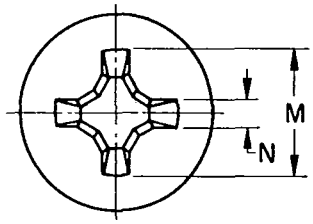


This type of recess has a large center opening, tapered wings, and blunt bottom, with all edges relieved or rounded.

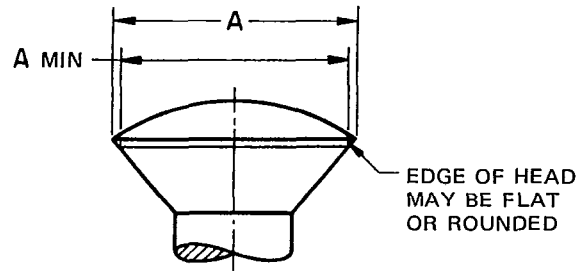


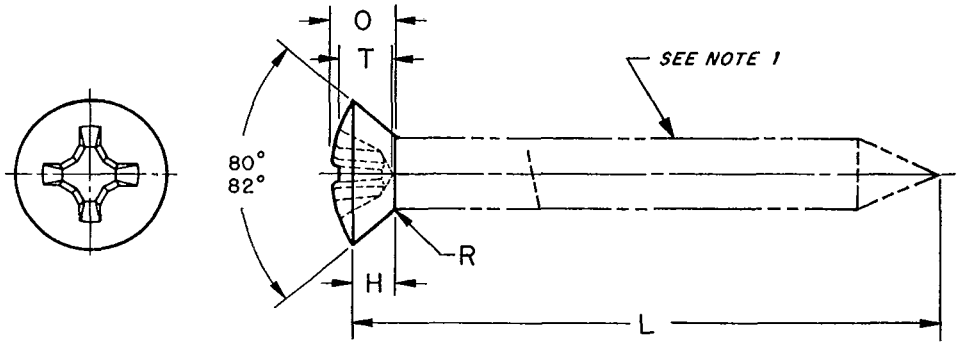


**Table 7 Dimensions of Type I Cross Recessed Oval Countersunk Head Wood Screws**

| Nominal Size[2] or Basic Screw Diameter | A | | H[3] | O | | M | | T | | N | Driver Size | Recess Penetration Gaging Depth | | R |
|---|---|---|---|---|---|---|---|---|---|---|---|---|---|---|
| | Head Diameter | | Head Side Height | Total Head Height | | Recess Diameter | | Recess Depth | | Recess Width | | | | Fillet Radius |
| | Max, Edge Sharp | Min, Edge Rounded or Flat | Ref | Max | Min | Max | Min | Max | Min | Min | | Max | Min | Max |
| 0 0.060 | 0.119 | 0.099 | 0.035 | 0.056 | 0.041 | 0.074 | 0.061 | 0.045 | 0.027 | 0.014 | 0 | 0.038 | 0.020 | 0.031 |
| 1 0.073 | 0.146 | 0.123 | 0.043 | 0.068 | 0.052 | 0.077 | 0.064 | 0.048 | 0.030 | 0.015 | 0 | 0.041 | 0.023 | 0.031 |
| 2 0.086 | 0.172 | 0.147 | 0.051 | 0.080 | 0.063 | 0.112 | 0.099 | 0.069 | 0.052 | 0.018 | 1 | 0.062 | 0.045 | 0.031 |
| 3 0.099 | 0.199 | 0.171 | 0.059 | 0.092 | 0.073 | 0.124 | 0.111 | 0.081 | 0.064 | 0.019 | 1 | 0.074 | 0.057 | 0.031 |
| 4 0.112 | 0.225 | 0.195 | 0.067 | 0.104 | 0.084 | 0.136 | 0.123 | 0.094 | 0.077 | 0.019 | 1 | 0.087 | 0.070 | 0.031 |
| 5 0.125 | 0.252 | 0.220 | 0.075 | 0.116 | 0.095 | 0.158 | 0.145 | 0.085 | 0.061 | 0.028 | 2 | 0.074 | 0.050 | 0.062 |
| 6 0.138 | 0.279 | 0.244 | 0.083 | 0.128 | 0.105 | 0.178 | 0.165 | 0.105 | 0.080 | 0.030 | 2 | 0.094 | 0.069 | 0.062 |
| 7 0.151 | 0.305 | 0.268 | 0.091 | 0.140 | 0.116 | 0.189 | 0.176 | 0.115 | 0.092 | 0.031 | 2 | 0.104 | 0.081 | 0.062 |
| 8 0.164 | 0.332 | 0.292 | 0.100 | 0.152 | 0.126 | 0.205 | 0.192 | 0.131 | 0.106 | 0.033 | 2 | 0.120 | 0.095 | 0.062 |
| 9 0.177 | 0.358 | 0.316 | 0.108 | 0.164 | 0.137 | 0.216 | 0.203 | 0.144 | 0.119 | 0.034 | 2 | 0.133 | 0.108 | 0.062 |
| 10 0.190 | 0.385 | 0.340 | 0.116 | 0.176 | 0.148 | 0.261 | 0.248 | 0.142 | 0.118 | 0.037 | 3 | 0.125 | 0.101 | 0.062 |
| 12 0.216 | 0.438 | 0.389 | 0.132 | 0.200 | 0.169 | 0.283 | 0.270 | 0.165 | 0.140 | 0.040 | 3 | 0.148 | 0.123 | 0.062 |
| 14 0.242 | 0.507 | 0.452 | 0.153 | 0.232 | 0.197 | 0.290 | 0.277 | 0.173 | 0.148 | 0.040 | 3 | 0.156 | 0.131 | 0.093 |
| 16 0.268 | 0.544 | 0.485 | 0.164 | 0.248 | 0.212 | 0.332 | 0.319 | 0.214 | 0.189 | 0.046 | 3 | 0.197 | 0.172 | 0.093 |
| 18 0.294 | 0.635 | 0.568 | 0.191 | 0.290 | 0.249 | 0.390 | 0.377 | 0.238 | 0.214 | 0.065 | 4 | 0.218 | 0.194 | 0.093 |
| 20 0.320 | 0.650 | 0.582 | 0.196 | 0.296 | 0.254 | 0.400 | 0.387 | 0.245 | 0.221 | 0.066 | 4 | 0.225 | 0.201 | 0.093 |
| 24 0.372 | 0.762 | 0.685 | 0.230 | 0.347 | 0.300 | 0.410 | 0.397 | 0.257 | 0.233 | 0.068 | 4 | 0.237 | 0.213 | 0.093 |

1 See Table 1 for dimensions applicable to thread and body features.

2 Where specifying nominal size in decimals, zeros preceding the decimal shall be omitted.

3 Tabulated values determined from formula for maximum H, Appendix III.

For additional requirements refer to General Data on Pages 2 and 3.



Copyright ASME International
Provided by IHS under license with ASME
No reproduction or networking permitted without license from IHS
Not for Resale

**TYPE IA RECESS**

**OVAL**

Type of Head

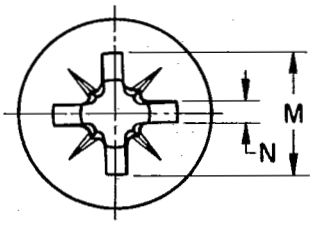


This type of recess has a large center opening, wide straight wings, and blunt bottom, with all edges relieved or rounded.

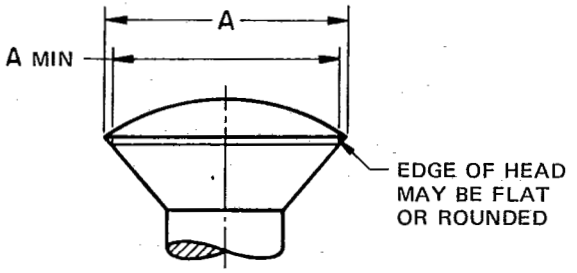


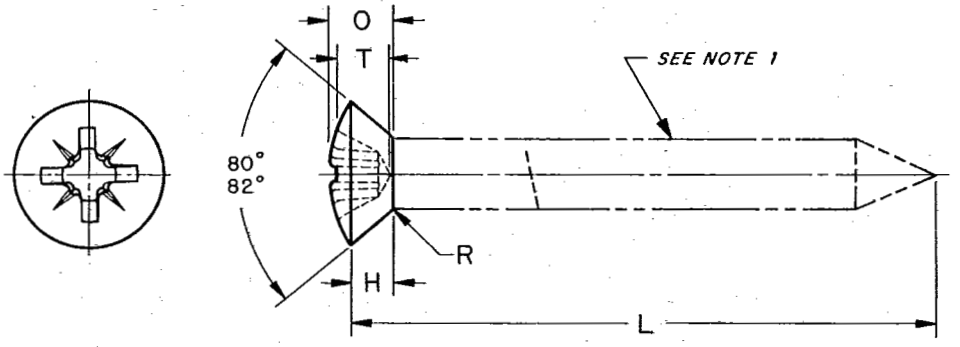


**Table 8 Dimensions of Type IA Cross Recessed Oval Countersunk Head Wood Screws**

| Nominal Size [2] or Basic Screw Diameter | A | | H [3] | O | | M | | T | | N | Driver Size | Recess Penetration Gaging Depth | | R |
|---|---|---|---|---|---|---|---|---|---|---|---|---|---|---|
| | Head Diameter | | Head Side Height | Total Head Height | | Recess Diameter | | Recess Depth | | Recess Width | | | | Fillet Radius |
| | Max, Edge Sharp | Min, Edge Rounded or Flat | Ref | Max | Min | Max | Min | Max | Min | Min | | Max | Min | Max |
| 0 0.060 | 0.119 | 0.099 | 0.035 | 0.056 | 0.041 | 0.074 | 0.061 | 0.048 | 0.032 | 0.018 | 0 | 0.040 | 0.024 | 0.031 |
| 1 0.073 | 0.146 | 0.123 | 0.043 | 0.068 | 0.052 | 0.077 | 0.064 | 0.051 | 0.035 | 0.018 | 0 | 0.043 | 0.027 | 0.031 |
| 2 0.086 | 0.172 | 0.147 | 0.051 | 0.080 | 0.063 | 0.112 | 0.099 | 0.073 | 0.057 | 0.029 | 1 | 0.062 | 0.046 | 0.031 |
| 3 0.099 | 0.199 | 0.171 | 0.059 | 0.092 | 0.073 | 0.124 | 0.111 | 0.085 | 0.069 | 0.030 | 1 | 0.074 | 0.058 | 0.031 |
| 4 0.112 | 0.225 | 0.195 | 0.067 | 0.104 | 0.084 | 0.136 | 0.123 | 0.097 | 0.081 | 0.030 | 1 | 0.086 | 0.070 | 0.031 |
| 5 0.125 | 0.252 | 0.220 | 0.075 | 0.116 | 0.095 | 0.158 | 0.145 | 0.089 | 0.071 | 0.041 | 2 | 0.074 | 0.056 | 0.062 |
| 6 0.138 | 0.279 | 0.244 | 0.083 | 0.128 | 0.105 | 0.178 | 0.165 | 0.109 | 0.091 | 0.041 | 2 | 0.093 | 0.075 | 0.062 |
| 7 0.151 | 0.305 | 0.268 | 0.091 | 0.140 | 0.116 | 0.189 | 0.176 | 0.120 | 0.102 | 0.041 | 2 | 0.105 | 0.087 | 0.062 |
| 8 0.164 | 0.332 | 0.292 | 0.100 | 0.152 | 0.126 | 0.205 | 0.192 | 0.137 | 0.119 | 0.041 | 2 | 0.121 | 0.103 | 0.062 |
| 9 0.177 | 0.358 | 0.316 | 0.108 | 0.164 | 0.137 | 0.216 | 0.203 | 0.148 | 0.130 | 0.042 | 2 | 0.132 | 0.114 | 0.062 |
| 10 0.190 | 0.385 | 0.340 | 0.116 | 0.176 | 0.148 | 0.261 | 0.248 | 0.147 | 0.129 | 0.056 | 3 | 0.125 | 0.107 | 0.062 |
| 12 0.216 | 0.438 | 0.389 | 0.132 | 0.200 | 0.169 | 0.283 | 0.270 | 0.169 | 0.151 | 0.057 | 3 | 0.148 | 0.130 | 0.062 |
| 14 0.242 | 0.507 | 0.452 | 0.153 | 0.232 | 0.197 | 0.290 | 0.277 | 0.177 | 0.159 | 0.057 | 3 | 0.155 | 0.137 | 0.093 |
| 16 0.268 | 0.544 | 0.485 | 0.164 | 0.248 | 0.212 | 0.332 | 0.319 | 0.219 | 0.201 | 0.057 | 3 | 0.197 | 0.179 | 0.093 |
| 18 0.294 | 0.635 | 0.568 | 0.191 | 0.290 | 0.249 | 0.390 | 0.377 | 0.241 | 0.223 | 0.086 | 4 | 0.215 | 0.197 | 0.093 |
| 20 0.320 | 0.650 | 0.582 | 0.196 | 0.296 | 0.254 | 0.400 | 0.387 | 0.251 | 0.233 | 0.086 | 4 | 0.225 | 0.207 | 0.093 |
| 24 0.372 | 0.762 | 0.685 | 0.230 | 0.347 | 0.300 | 0.410 | 0.397 | 0.262 | 0.244 | 0.086 | 4 | 0.235 | 0.217 | 0.093 |

1 See Table 1 for dimensions applicable to thread and body features.
2 Where specifying nominal size in decimals, zeros preceding the decimal shall be omitted.
3 Tabulated values determined from formula for maximum H, Appendix III.

For additional requirements refer to General Data on Pages 2 and 3.



Copyright ASME International
Provided by IHS under license with ASME
No reproduction or networking permitted without license from IHS
Not for Resale

**TYPE II RECESS**

**OVAL**



Type of Head

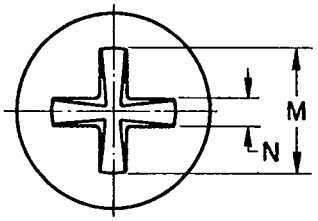


This type of recess consists of two intersecting slots with parallel sides converging to a slightly truncated apex at bottom of recess.

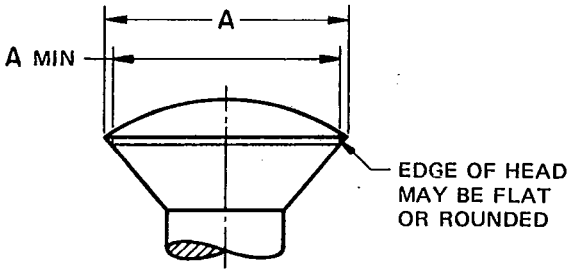


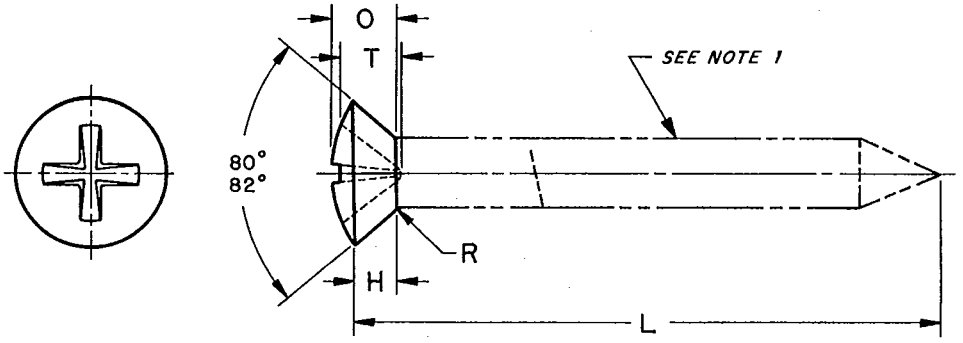


**Table 9 Dimensions of Type II Cross Recessed Oval Countersunk Head Wood Screws**

| Nominal Size[2] or Basic Screw Diameter | A | | H[3] | O | | M | | T | | N | Driver Size | Recess Penetration Gaging Depth | | R |
|---|---|---|---|---|---|---|---|---|---|---|---|---|---|---|
| | Head Diameter | | Head Side Height | Total Head Height | | Recess Diameter | | Recess Depth | | Recess Width | | | | Fillet Radius |
| | Max, Edge Sharp | Min, Edge Rounded or Flat | Ref | Max | Min | Max | Min | Max | Min | Min | | Max | Min | Max |
| 0 0.060 | 0.119 | 0.099 | 0.035 | 0.056 | 0.041 | 0.083 | 0.073 | 0.042 | 0.031 | 0.021 | Point same on all drivers | * | * | 0.031 |
| 1 0.073 | 0.146 | 0.123 | 0.043 | 0.068 | 0.052 | 0.097 | 0.086 | 0.054 | 0.042 | 0.024 | | * | * | 0.031 |
| 2 0.086 | 0.172 | 0.147 | 0.051 | 0.080 | 0.063 | 0.120 | 0.109 | 0.066 | 0.054 | 0.027 | | 0.040 | 0.029 | 0.031 |
| 3 0.099 | 0.199 | 0.171 | 0.059 | 0.092 | 0.073 | 0.139 | 0.127 | 0.079 | 0.066 | 0.030 | | 0.053 | 0.041 | 0.031 |
| 4 0.112 | 0.225 | 0.195 | 0.067 | 0.104 | 0.084 | 0.157 | 0.145 | 0.088 | 0.075 | 0.032 | | 0.064 | 0.052 | 0.031 |
| 5 0.125 | 0.252 | 0.220 | 0.075 | 0.116 | 0.095 | 0.176 | 0.162 | 0.101 | 0.087 | 0.035 | | 0.077 | 0.064 | 0.062 |
| 6 0.138 | 0.279 | 0.244 | 0.083 | 0.128 | 0.105 | 0.195 | 0.180 | 0.113 | 0.098 | 0.038 | | 0.089 | 0.075 | 0.062 |
| 7 0.151 | 0.305 | 0.268 | 0.091 | 0.140 | 0.116 | 0.213 | 0.198 | 0.125 | 0.110 | 0.040 | | 0.101 | 0.087 | 0.062 |
| 8 0.164 | 0.332 | 0.292 | 0.100 | 0.152 | 0.126 | 0.232 | 0.216 | 0.132 | 0.117 | 0.043 | | 0.113 | 0.099 | 0.062 |
| 9 0.177 | 0.358 | 0.316 | 0.108 | 0.164 | 0.137 | 0.251 | 0.234 | 0.145 | 0.128 | 0.046 | | 0.126 | 0.110 | 0.062 |
| 10 0.190 | 0.385 | 0.340 | 0.116 | 0.176 | 0.148 | 0.269 | 0.251 | 0.156 | 0.140 | 0.048 | | 0.137 | 0.122 | 0.062 |
| 12 0.216 | 0.438 | 0.389 | 0.132 | 0.200 | 0.169 | 0.307 | 0.287 | 0.181 | 0.163 | 0.054 | | 0.162 | 0.145 | 0.062 |
| 14 0.242 | 0.507 | 0.452 | 0.153 | 0.232 | 0.197 | 0.355 | 0.334 | 0.204 | 0.186 | 0.061 | | 0.193 | 0.176 | 0.093 |
| 16 0.268 | 0.544 | 0.485 | 0.164 | 0.248 | 0.212 | 0.381 | 0.358 | 0.221 | 0.201 | 0.064 | | 0.210 | 0.191 | 0.093 |
| 18 0.294 | 0.635 | 0.568 | 0.191 | 0.290 | 0.249 | 0.444 | 0.420 | 0.262 | 0.242 | 0.074 | | 0.251 | 0.232 | 0.093 |
| 20 0.320 | 0.650 | 0.582 | 0.196 | 0.296 | 0.254 | 0.455 | 0.430 | 0.269 | 0.248 | 0.075 | | 0.258 | 0.238 | 0.093 |
| 24 0.372 | 0.762 | 0.685 | 0.230 | 0.347 | 0.300 | 0.523 | 0.495 | 0.314 | 0.291 | 0.086 | | 0.303 | 0.281 | 0.093 |

1 See Table 1 for dimensions applicable to thread and body features.
2 Where specifying nominal size in decimals, zeros preceding the decimal shall be omitted.
3 Tabulated values determined from formula for maximum H, Appendix III.
• Not practical to gage.

For additional requirements refer to General Data on Pages 2 and 3.



Copyright ASME International
Provided by IHS under license with ASME
No reproduction or networking permitted without license from IHS
Not for Resale

**SLOTTED**

**PAN**

Type of Head

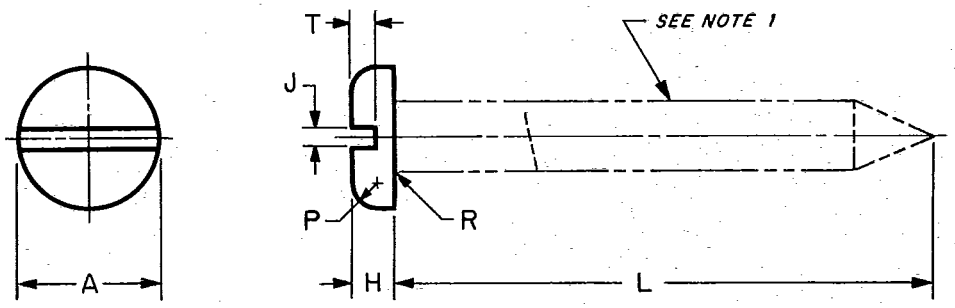


**Table 10 Dimensions of Slotted Pan Head Wood Screws**

| Nominal Size [2] or Basic Screw Diameter | A | | H | | P | | J | | T | | R |
|---|---|---|---|---|---|---|---|---|---|---|---|
| | Head Diameter | | Head Height | | Head Radius | | Slot Width | | Slot Depth | | Fillet Radius |
| | Max | Min | Max | Min | Max | Min | Max | Min | Max | Min | Max |
| 0 0.060 | 0.116 | 0.104 | 0.039 | 0.031 | 0.020 | 0.005 | 0.023 | 0.016 | 0.022 | 0.014 | 0.016 |
| 1 0.073 | 0.142 | 0.130 | 0.046 | 0.038 | 0.025 | 0.005 | 0.026 | 0.019 | 0.027 | 0.018 | 0.016 |
| 2 0.086 | 0.167 | 0.155 | 0.053 | 0.045 | 0.035 | 0.010 | 0.031 | 0.023 | 0.031 | 0.022 | 0.016 |
| 3 0.099 | 0.193 | 0.180 | 0.060 | 0.051 | 0.037 | 0.010 | 0.035 | 0.027 | 0.035 | 0.027 | 0.016 |
| 4 0.112 | 0.219 | 0.205 | 0.068 | 0.058 | 0.042 | 0.010 | 0.039 | 0.031 | 0.040 | 0.030 | 0.016 |
| 5 0.125 | 0.245 | 0.231 | 0.075 | 0.065 | 0.044 | 0.015 | 0.043 | 0.035 | 0.045 | 0.034 | 0.031 |
| 6 0.138 | 0.270 | 0.256 | 0.082 | 0.072 | 0.046 | 0.015 | 0.048 | 0.039 | 0.050 | 0.037 | 0.031 |
| 7 0.151 | 0.296 | 0.281 | 0.089 | 0.079 | 0.049 | 0.015 | 0.048 | 0.039 | 0.054 | 0.041 | 0.031 |
| 8 0.164 | 0.322 | 0.306 | 0.096 | 0.085 | 0.052 | 0.015 | 0.054 | 0.045 | 0.058 | 0.045 | 0.031 |
| 9 0.177 | 0.348 | 0.331 | 0.103 | 0.092 | 0.056 | 0.020 | 0.054 | 0.045 | 0.063 | 0.049 | 0.031 |
| 10 0.190 | 0.373 | 0.357 | 0.110 | 0.099 | 0.061 | 0.020 | 0.060 | 0.050 | 0.068 | 0.053 | 0.031 |
| 12 0.216 | 0.425 | 0.407 | 0.125 | 0.112 | 0.078 | 0.025 | 0.067 | 0.056 | 0.077 | 0.061 | 0.031 |
| 14 0.242 | 0.492 | 0.473 | 0.144 | 0.130 | 0.087 | 0.035 | 0.075 | 0.064 | 0.087 | 0.070 | 0.046 |
| 16 0.268 | 0.528 | 0.508 | 0.153 | 0.139 | 0.094 | 0.040 | 0.075 | 0.064 | 0.093 | 0.074 | 0.046 |
| 18 0.294 | 0.615 | 0.594 | 0.178 | 0.162 | 0.099 | 0.040 | 0.084 | 0.072 | 0.106 | 0.085 | 0.046 |
| 20 0.320 | 0.631 | 0.608 | 0.182 | 0.166 | 0.121 | 0.040 | 0.084 | 0.072 | 0.108 | 0.087 | 0.046 |
| 24 0.372 | 0.740 | 0.716 | 0.212 | 0.195 | 0.143 | 0.040 | 0.094 | 0.081 | 0.124 | 0.100 | 0.046 |

1 See Table 1 for dimensions applicable to thread and body features.
2 Where specifying nominal size in decimals, zeros preceding the decimal shall be omitted.

For additional requirements refer to General Data on Pages 2 and 3.



Copyright ASME International
Provided by IHS under license with ASME
No reproduction or networking permitted without license from IHS

Not for Resale

**TYPE I RECESS**

# PAN



Type of Head

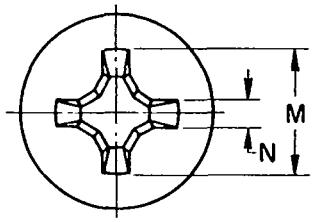


This type of recess has a large center opening, tapered wings, and blunt bottom, with all edges relieved or rounded.

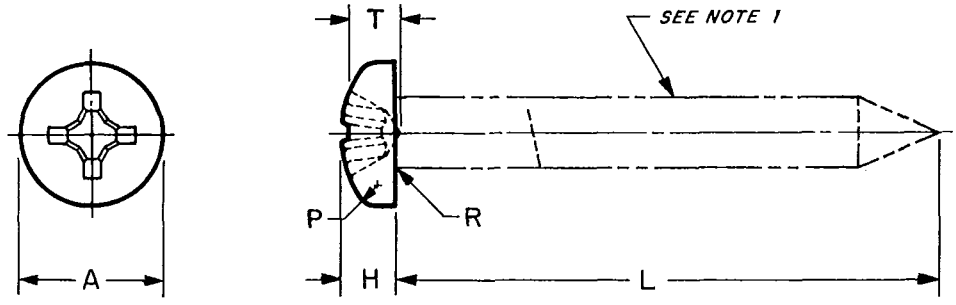


**Table 11 Dimensions of Type I Cross Recessed Pan Head Wood Screws**

| Nominal Size[2] or Basic Screw Diameter | A Head Diameter | | H Head Height | | P Head Radius | | M Recess Diameter | | T Recess Depth | | N Recess Width | Driver Size | Recess Penetration Gaging Depth | | R Fillet Radius |
|---|---|---|---|---|---|---|---|---|---|---|---|---|---|---|---|
| | Max | Min | Max | Min | Max | Min | Max | Min | Max | Min | Min | | Max | Min | Max |
| 0 0.060 | 0.116 | 0.104 | 0.044 | 0.036 | 0.020 | 0.005 | 0.067 | 0.054 | 0.039 | 0.021 | 0.013 | 0 | 0.032 | 0.014 | 0.016 |
| 1 0.073 | 0.142 | 0.130 | 0.053 | 0.044 | 0.025 | 0.005 | 0.074 | 0.061 | 0.045 | 0.025 | 0.014 | 0 | 0.040 | 0.022 | 0.016 |
| 2 0.086 | 0.167 | 0.155 | 0.062 | 0.053 | 0.035 | 0.010 | 0.104 | 0.091 | 0.059 | 0.041 | 0.017 | 1 | 0.052 | 0.034 | 0.016 |
| 3 0.099 | 0.193 | 0.180 | 0.071 | 0.062 | 0.037 | 0.010 | 0.112 | 0.099 | 0.068 | 0.050 | 0.019 | 1 | 0.061 | 0.043 | 0.016 |
| 4 0.112 | 0.219 | 0.205 | 0.080 | 0.070 | 0.042 | 0.010 | 0.122 | 0.109 | 0.078 | 0.060 | 0.019 | 1 | 0.071 | 0.053 | 0.016 |
| 5 0.125 | 0.245 | 0.231 | 0.089 | 0.079 | 0.044 | 0.015 | 0.158 | 0.145 | 0.083 | 0.057 | 0.028 | 2 | 0.072 | 0.046 | 0.031 |
| 6 0.138 | 0.270 | 0.256 | 0.097 | 0.087 | 0.046 | 0.015 | 0.166 | 0.153 | 0.091 | 0.066 | 0.028 | 2 | 0.080 | 0.055 | 0.031 |
| 7 0.151 | 0.296 | 0.281 | 0.106 | 0.096 | 0.049 | 0.015 | 0.176 | 0.163 | 0.100 | 0.075 | 0.029 | 2 | 0.089 | 0.064 | 0.031 |
| 8 0.164 | 0.322 | 0.306 | 0.115 | 0.105 | 0.052 | 0.015 | 0.182 | 0.169 | 0.108 | 0.082 | 0.030 | 2 | 0.097 | 0.071 | 0.031 |
| 9 0.177 | 0.348 | 0.331 | 0.124 | 0.114 | 0.056 | 0.020 | 0.190 | 0.177 | 0.116 | 0.091 | 0.030 | 2 | 0.105 | 0.080 | 0.031 |
| 10 0.190 | 0.373 | 0.357 | 0.133 | 0.122 | 0.061 | 0.020 | 0.199 | 0.186 | 0.124 | 0.100 | 0.031 | 2 | 0.113 | 0.089 | 0.031 |
| 12 0.216 | 0.425 | 0.407 | 0.151 | 0.139 | 0.078 | 0.025 | 0.259 | 0.246 | 0.141 | 0.115 | 0.034 | 3 | 0.124 | 0.098 | 0.031 |
| 14 0.242 | 0.492 | 0.473 | 0.175 | 0.162 | 0.087 | 0.035 | 0.281 | 0.268 | 0.161 | 0.135 | 0.036 | 3 | 0.144 | 0.118 | 0.046 |
| 16 0.268 | 0.528 | 0.508 | 0.187 | 0.173 | 0.094 | 0.035 | 0.292 | 0.279 | 0.175 | 0.149 | 0.037 | 3 | 0.158 | 0.132 | 0.046 |
| 18 0.294 | 0.615 | 0.594 | 0.218 | 0.203 | 0.099 | 0.040 | 0.350 | 0.337 | 0.193 | 0.169 | 0.059 | 4 | 0.173 | 0.149 | 0.046 |
| 20 0.320 | 0.631 | 0.608 | 0.223 | 0.208 | 0.121 | 0.040 | 0.350 | 0.337 | 0.193 | 0.169 | 0.059 | 4 | 0.173 | 0.149 | 0.046 |
| 24 0.372 | 0.740 | 0.716 | 0.261 | 0.244 | 0.143 | 0.040 | 0.389 | 0.376 | 0.233 | 0.210 | 0.065 | 4 | 0.213 | 0.190 | 0.046 |

1 See Table 1 for dimensions applicable to thread and body features.
2 Where specifying nominal size in decimals, zeros preceding the decimal shall be omitted.

For additional requirements refer to General Data on Pages 2 and 3.



Copyright ASME International
Provided by IHS under license with ASME
No reproduction or networking permitted without license from IHS

Not for Resale

AMERICAN NATIONAL STANDARD
WOOD SCREWS (INCH SERIES)

ANSI B18.6.1–1981

**TYPE IA RECESS**

**PAN**

Type of Head

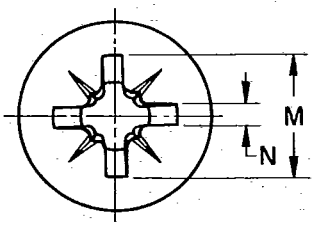


This type of recess has a large center opening, wide straight wings, and blunt bottom, with all edges relieved or rounded.

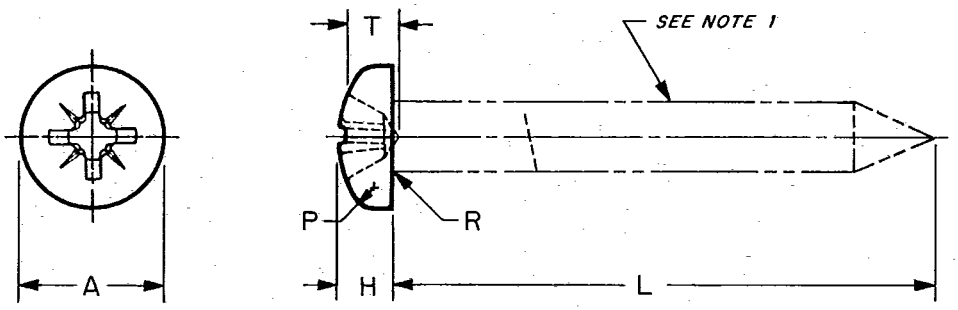


**Table 12 Dimensions of Type IA Cross Recessed Pan Head Wood Screws**

| Nominal Size[2] or Basic Screw Diameter | A Head Diameter | | H Head Height | | P Head Radius | | M Recess Diameter | | T Recess Depth | | N Recess Width | Driver Size | Recess Penetration Gaging Depth | | R Fillet Radius |
|---|---|---|---|---|---|---|---|---|---|---|---|---|---|---|---|
| | Max | Min | Max | Min | Max | Min | Max | Min | Max | Min | Min | | Max | Min | Max |
| 0 0.060 | 0.116 | 0.104 | 0.044 | 0.036 | 0.020 | 0.005 | 0.067 | 0.054 | 0.040 | 0.024 | 0.018 | 0 | 0.033 | 0.017 | 0.016 |
| 1 0.073 | 0.142 | 0.130 | 0.053 | 0.044 | 0.025 | 0.005 | 0.074 | 0.061 | 0.047 | 0.031 | 0.018 | 0 | 0.040 | 0.024 | 0.016 |
| 2 0.086 | 0.167 | 0.155 | 0.062 | 0.053 | 0.035 | 0.010 | 0.104 | 0.091 | 0.064 | 0.048 | 0.028 | 1 | 0.053 | 0.037 | 0.016 |
| 3 0.099 | 0.193 | 0.180 | 0.071 | 0.062 | 0.037 | 0.010 | 0.112 | 0.099 | 0.073 | 0.057 | 0.029 | 1 | 0.062 | 0.046 | 0.016 |
| 4 0.112 | 0.219 | 0.205 | 0.080 | 0.070 | 0.042 | 0.010 | 0.122 | 0.109 | 0.083 | 0.067 | 0.029 | 1 | 0.072 | 0.056 | 0.016 |
| 5 0.125 | 0.245 | 0.231 | 0.089 | 0.079 | 0.044 | 0.015 | 0.154 | 0.141 | 0.084 | 0.066 | 0.040 | 2 | 0.068 | 0.050 | 0.031 |
| 6 0.138 | 0.270 | 0.256 | 0.097 | 0.087 | 0.046 | 0.015 | 0.162 | 0.149 | 0.092 | 0.074 | 0.040 | 2 | 0.076 | 0.058 | 0.031 |
| 7 0.151 | 0.296 | 0.281 | 0.106 | 0.096 | 0.049 | 0.015 | 0.170 | 0.157 | 0.101 | 0.083 | 0.041 | 2 | 0.085 | 0.067 | 0.031 |
| 8 0.164 | 0.322 | 0.306 | 0.115 | 0.105 | 0.052 | 0.015 | 0.177 | 0.164 | 0.108 | 0.090 | 0.041 | 2 | 0.092 | 0.074 | 0.031 |
| 9 0.177 | 0.348 | 0.331 | 0.124 | 0.114 | 0.056 | 0.020 | 0.185 | 0.172 | 0.116 | 0.098 | 0.041 | 2 | 0.100 | 0.082 | 0.031 |
| 10 0.190 | 0.373 | 0.357 | 0.133 | 0.122 | 0.061 | 0.020 | 0.193 | 0.180 | 0.124 | 0.106 | 0.041 | 2 | 0.108 | 0.090 | 0.031 |
| 12 0.216 | 0.425 | 0.407 | 0.151 | 0.139 | 0.078 | 0.025 | 0.254 | 0.241 | 0.139 | 0.121 | 0.056 | 3 | 0.117 | 0.099 | 0.031 |
| 14 0.242 | 0.492 | 0.473 | 0.175 | 0.162 | 0.087 | 0.035 | 0.273 | 0.260 | 0.159 | 0.141 | 0.057 | 3 | 0.137 | 0.119 | 0.046 |
| 16 0.268 | 0.528 | 0.508 | 0.187 | 0.173 | 0.094 | 0.035 | 0.284 | 0.271 | 0.171 | 0.153 | 0.057 | 3 | 0.149 | 0.131 | 0.046 |
| 18 0.294 | 0.615 | 0.594 | 0.218 | 0.203 | 0.099 | 0.040 | 0.341 | 0.328 | 0.191 | 0.173 | 0.086 | 4 | 0.164 | 0.146 | 0.046 |
| 20 0.320 | 0.631 | 0.608 | 0.223 | 0.208 | 0.121 | 0.040 | 0.341 | 0.328 | 0.191 | 0.173 | 0.086 | 4 | 0.164 | 0.146 | 0.046 |
| 24 0.372 | 0.740 | 0.716 | 0.261 | 0.244 | 0.143 | 0.040 | 0.377 | 0.364 | 0.228 | 0.210 | 0.086 | 4 | 0.201 | 0.183 | 0.046 |

1 See Table 1 for dimensions applicable to thread and body features.
2 Where specifying nominal size in decimals, zeros preceding the decimal shall be omitted.

For additional requirements refer to General Data on Pages 2 and 3.



Copyright ASME International
Provided by IHS under license with ASME
No reproduction or networking permitted without license from IHS
Not for Resale

**TYPE II RECESS**

# PAN



Type of Head

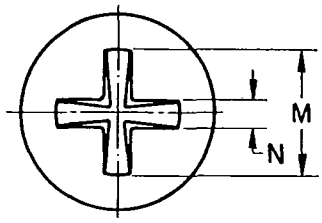


This type of recess consists of two intersecting slots with parallel sides converging to a slightly truncated apex at bottom of recess.

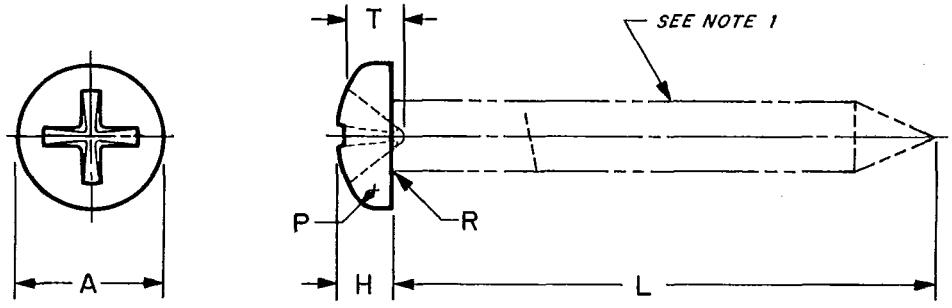


## Table 13 Dimensions of Type II Cross Recessed Pan Head Wood Screws

| Nominal Size [2] or Basic Screw Diameter | A | | H | | P | | M | | T | | N | Driver Size | Recess Penetration Gaging Depth | | R |
|---|---|---|---|---|---|---|---|---|---|---|---|---|---|---|---|
| | Head Diameter | | Head Height | | Head Radius | | Recess Diameter | | Recess Depth | | Recess Width | | | | Fillet Radius |
| | Max | Min | Max | Min | Max | Min | Max | Min | Max | Min | Min | | Max | Min | Max |
| 0 0.060 | 0.116 | 0.104 | 0.044 | 0.036 | 0.020 | 0.005 | 0.076 | 0.066 | 0.038 | 0.026 | 0.022 | Point same on all drivers | * | * | 0.016 |
| 1 0.073 | 0.142 | 0.130 | 0.053 | 0.044 | 0.025 | 0.005 | 0.089 | 0.079 | 0.046 | 0.034 | 0.024 | | * | * | 0.016 |
| 2 0.086 | 0.167 | 0.155 | 0.062 | 0.053 | 0.035 | 0.010 | 0.109 | 0.097 | 0.059 | 0.046 | 0.027 | | 0.033 | 0.022 | 0.016 |
| 3 0.099 | 0.193 | 0.180 | 0.071 | 0.062 | 0.037 | 0.010 | 0.125 | 0.113 | 0.069 | 0.056 | 0.029 | | 0.043 | 0.032 | 0.016 |
| 4 0.112 | 0.219 | 0.205 | 0.080 | 0.070 | 0.042 | 0.010 | 0.143 | 0.130 | 0.079 | 0.066 | 0.032 | | 0.055 | 0.043 | 0.016 |
| 5 0.125 | 0.245 | 0.231 | 0.089 | 0.079 | 0.044 | 0.015 | 0.159 | 0.145 | 0.090 | 0.076 | 0.034 | | 0.066 | 0.052 | 0.031 |
| 6 0.138 | 0.270 | 0.256 | 0.097 | 0.087 | 0.046 | 0.015 | 0.176 | 0.162 | 0.096 | 0.082 | 0.037 | | 0.077 | 0.064 | 0.031 |
| 7 0.151 | 0.296 | 0.281 | 0.106 | 0.096 | 0.049 | 0.015 | 0.190 | 0.175 | 0.105 | 0.090 | 0.039 | | 0.086 | 0.072 | 0.031 |
| 8 0.164 | 0.322 | 0.306 | 0.115 | 0.105 | 0.052 | 0.015 | 0.207 | 0.192 | 0.116 | 0.101 | 0.041 | | 0.097 | 0.083 | 0.031 |
| 9 0.177 | 0.348 | 0.331 | 0.124 | 0.114 | 0.056 | 0.020 | 0.223 | 0.208 | 0.127 | 0.112 | 0.044 | | 0.107 | 0.093 | 0.031 |
| 10 0.190 | 0.373 | 0.357 | 0.133 | 0.122 | 0.061 | 0.020 | 0.240 | 0.224 | 0.137 | 0.122 | 0.046 | | 0.118 | 0.104 | 0.031 |
| 12 0.216 | 0.425 | 0.407 | 0.151 | 0.139 | 0.078 | 0.025 | 0.272 | 0.254 | 0.158 | 0.142 | 0.051 | | 0.139 | 0.124 | 0.031 |
| 14 0.242 | 0.492 | 0.473 | 0.175 | 0.162 | 0.087 | 0.035 | 0.318 | 0.300 | 0.180 | 0.163 | 0.058 | | 0.169 | 0.153 | 0.046 |
| 16 0.268 | 0.528 | 0.508 | 0.187 | 0.173 | 0.094 | 0.035 | 0.341 | 0.322 | 0.195 | 0.178 | 0.061 | | 0.184 | 0.168 | 0.046 |
| 18 0.294 | 0.615 | 0.594 | 0.218 | 0.203 | 0.099 | 0.040 | 0.396 | 0.375 | 0.231 | 0.212 | 0.069 | | 0.220 | 0.202 | 0.046 |
| 20 0.320 | 0.631 | 0.608 | 0.223 | 0.208 | 0.121 | 0.040 | 0.396 | 0.375 | 0.231 | 0.212 | 0.069 | | 0.220 | 0.202 | 0.046 |
| 24 0.372 | 0.740 | 0.716 | 0.261 | 0.244 | 0.143 | 0.040 | 0.480 | 0.457 | 0.286 | 0.266 | 0.081 | | 0.275 | 0.256 | 0.046 |

1 See Table 1 for dimensions applicable to thread and body features.

2 Where specifying nominal size in decimals, zeros preceding the decimal shall be omitted.

* Not practical to gage.

For additional requirements refer to General Data on Pages 2 and 3.



Copyright ASME International
Provided by IHS under license with ASME
No reproduction or networking permitted without license from IHS

Not for Resale

ASME B18.6.1 81 2595512 0015184 2

# APPENDIX I

## PENETRATION GAGING OF RECESSED HEADS

Penetration gaging is a test to determine the suitability of recesses in the heads of screws and may be used to indicate deficiencies in the dimensions of the recesses specified in the dimensional tables. Penetrations which are too deep indicate the possibility of a thin section between head and shank of screw, a weakness which might result in twisting-off screw heads during tightening of the screws. Use of screws having shallow penetrations might result in production problems such as reaming of recesses or excessive wear on driver bits.

Penetration gaging depth values for the various styles of recessed heads are included in the dimensional tables for the respective heads. These values were predicated originally on the gaging of plain finish (unplated or uncoated) screws. However, subsequent experience has shown that the Type I and Type II recess penetration limits, as tabulated; and the Type IA recess penetration depths with tabulated minimum limit reduced by up to 0.005 in.; to be suitable for the gaging of screws having coating thickness of up to and including 0.0003 in. on significant surfaces. Screws having heavier coatings, which fail to meet the penetration gaging requirements, must be stripped of finish and gaged for acceptance or rejection in the plain condition.

Specified herein are dimensions of gage points to be used for penetration gaging the Type I, Type IA and Type II recesses. Gage points approach as nearly as possible the perfect driver form. Also specified are gage heads and bushings which adapt the gage points to standard dial gages.

Penetration is gaged relative to a reference plane defined by the intersection of the edge of the recess wings with the top surface of the screw head. This plane is the same as the top surface of a flat head screw but is somewhat below the topmost portion of heads which have rounded top surfaces. Knife edges or tapered ridges on the gage head are used to establish the reference plane. A reverse reading dial gage is used to indicate the penetration of the gage point into the recess. The gage may be zeroed on any flat surface.



Copyright ASME International
Provided by IHS under license with ASME
No reproduction or networking permitted without license from IHS
Not for Resale

| APPENDIX | TYPE I RECESS |
|---|---|
| I | PENETRATION GAGING |

## PENETRATION GAGES FOR TYPE I RECESS

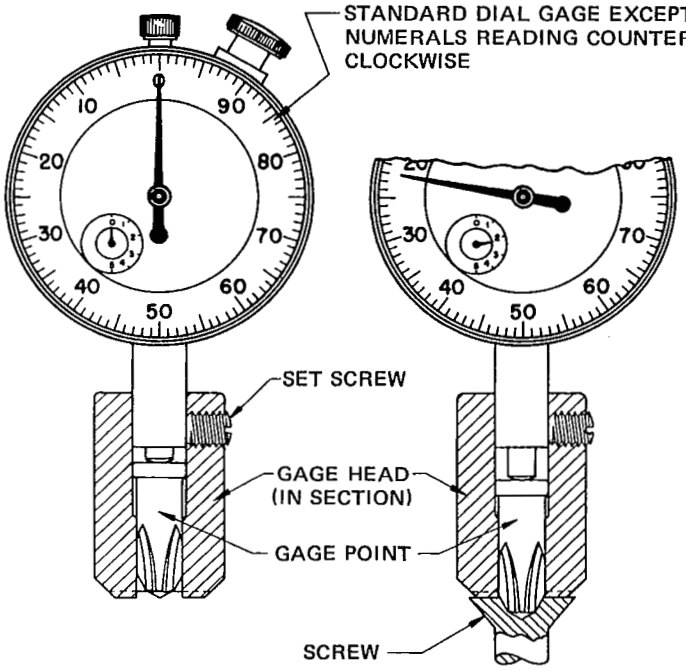


PENETRATION GAGE

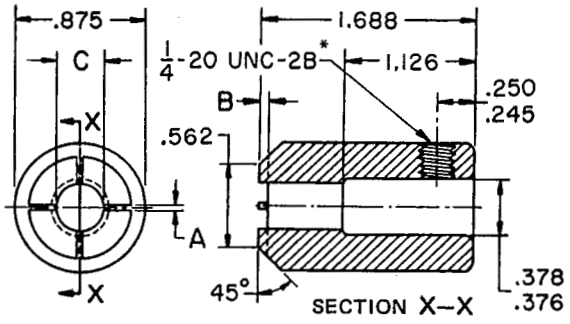


GAGE HEAD

Tolerance ±0.005 unless otherwise specified.

**Dimensions of Gage Heads**

| Size of Recess Gage | A | B | C |
|---|---|---|---|
| | ±0.002 | ±0.003 | ±0.0002 |
| No. 0 | 0.008 | 0.015 | 0.0460 |
| No. 1 | 0.012 | 0.020 | 0.0880 |
| No. 2 | 0.018 | 0.031 | 0.1420 |
| No. 3 | 0.022 | 0.037 | 0.2100 |
| No. 4 | 0.031 | 0.062 | 0.3130 |

*Gaging shall be per System 21, ANSI B1.3–1979.

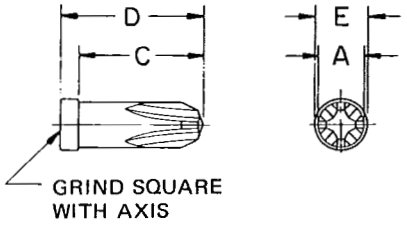


GAGE POINT

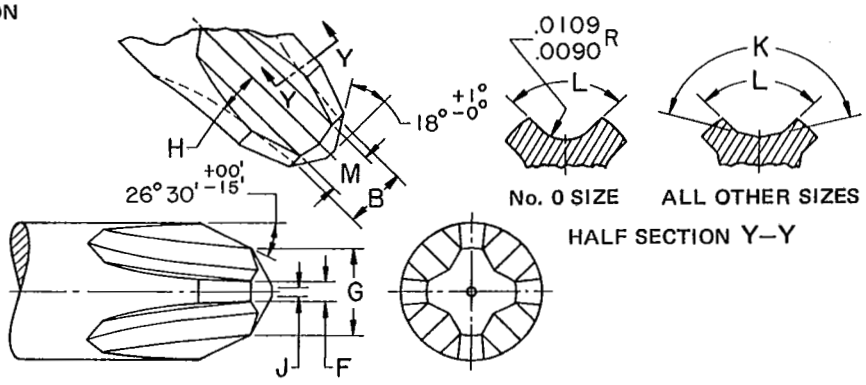


ENLARGED POINT DETAIL

**Dimensions of Gage Points**

| Size of Recess Gage | A | B | C | D | E | F | | G | H | J | | K | L | M |
|---|---|---|---|---|---|---|---|---|---|---|---|---|---|---|
| | Point Dia | Point Width | Length | Length | Dia | Wing Thickness | | Point Width | Milling Angle | Flat on End | | Base Flute Angle | Side Flute Angle | Flute Width at Bottom |
| | ±0.0002 | +0.0000 −0.0010 | ±0.005 | ±0.005 | ±0.005 | Max | Min | +0.0010 −0.0000 | +00′ −15′ | Max | Min | +15′ −00′ | +15′ −00′ | +0.0000 −0.0010 |
| No. 0 | 0.0450 | 0.0240 | 0.656 | 0.781 | 0.094 | 0.012 | 0.010 | 0.0320 | 7°00′ | 0.015 | 0.010 | ** | 92°00′ | 0.0151* |
| No. 1 | 0.0870 | 0.0394 | 0.688 | 0.812 | 0.156 | 0.020 | 0.018 | 0.0500 | 7°00′ | 0.020 | 0.015 | 138°00′ | 92°00′ | 0.0202 |
| No. 2 | 0.1410 | 0.0606 | 0.750 | 0.875 | 0.219 | 0.025 | 0.023 | 0.0900 | 5°45′ | 0.020 | 0.015 | 140°00′ | 92°00′ | 0.0434 |
| No. 3 | 0.2090 | 0.0983 | 0.781 | 0.906 | 0.250 | 0.031 | 0.029 | 0.1500 | 5°45′ | 0.020 | 0.015 | 146°00′ | 92°00′ | 0.0826 |
| No. 4 | 0.3120 | 0.1407 | 0.844 | 0.969 | 0.359 | 0.044 | 0.042 | 0.2000 | 7°00′ | 0.020 | 0.015 | 153°00′ | 92°00′ | 0.1078 |

*Tolerance on size No. 0 is plus 0.0000 and minus 0.0026 in.

**Base of flute on size No. 0 is 0.0090 to 0.0109 in. radius.



Copyright ASME International
Provided by IHS under license with ASME
No reproduction or networking permitted without license from IHS
Not for Resale

| TYPE IA RECESS | APPENDIX |
|---|---|
| PENETRATION GAGING | I |

## PENETRATION GAGES FOR TYPE IA RECESS

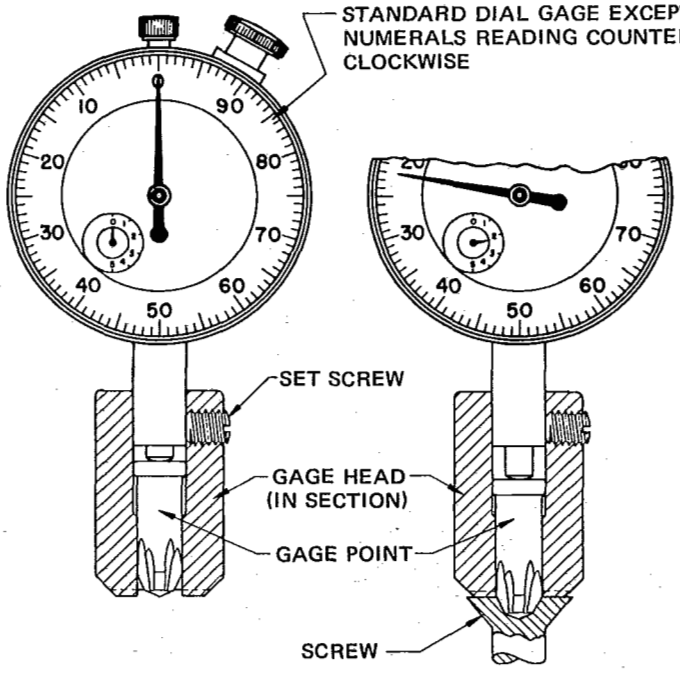


PENETRATION GAGE

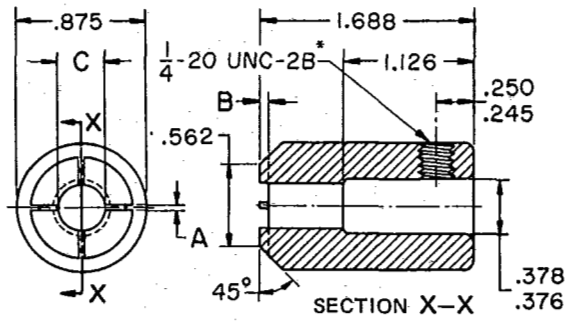


GAGE HEAD

Tolerance ±0.005 unless otherwise specified.

**Dimensions of Gage Heads**

| Size of Recess Gage | A | B | C |
|---|---|---|---|
| | ±0.002 | ±0.003 | ±0.0002 |
| No. 0 | 0.008 | 0.015 | 0.0460 |
| No. 1 | 0.012 | 0.020 | 0.0880 |
| No. 2 | 0.018 | 0.031 | 0.1420 |
| No. 3 | 0.022 | 0.037 | 0.2100 |
| No. 4 | 0.031 | 0.062 | 0.3130 |

*Gaging shall be per System 21, ANSI B1.3–1979.

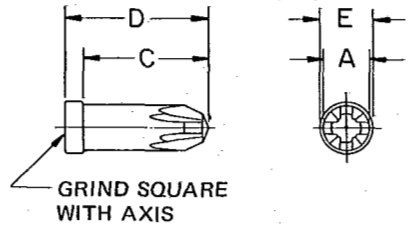


GAGE POINT

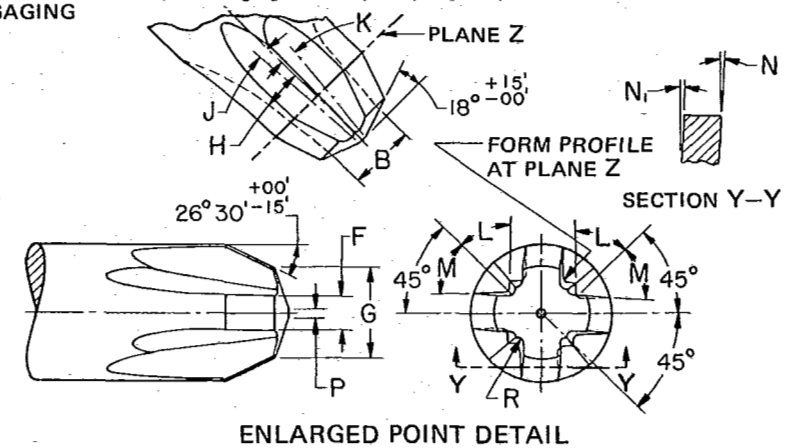


ENLARGED POINT DETAIL

**Dimensions of Gage Points**

| Size of Recess Gage | A | B | | C | D | E | F | G | H | J | K | L[1] | M[1] | N | $N_1$ | P | R | |
|---|---|---|---|---|---|---|---|---|---|---|---|---|---|---|---|---|---|---|
| | Point Dia | Point Width (At Base of R Radius) | | Length | Length | Dia | Wing Thickness | Point Width | Milling Angle | Milling Offset Angle | Milling Offset Angle | Rib Form Angle | Wing Form Angle | Wing Offset Angle | Wing Offset Angle | Flat on End | Radius | |
| | ±0.0002 | Max | Min | ±0.005 | ±0.005 | ±0.005 | +0.0010 −0.0000 | +0.001 −0.000 | +00′ −06′ | +06′ −00′ | +06′ −00′ | +07′ −00′ | +07′ −00′ | | | +0.005 −0.000 | Max | Min |
| No. 0 | 0.0450 | 0.0280 | 0.0265 | 0.656 | 0.781 | 0.094 | 0.0165 | 0.035 | 7°00′ | 4°23′ | 7°45′ | 46°00′ | 46°00′ | 22′ | 2°00′ | 0.010 | 0.004 | 0.003 |
| No. 1 | 0.0870 | 0.0438 | 0.0423 | 0.688 | 0.812 | 0.156 | 0.0265 | 0.054 | 7°00′ | 4°23′ | 7°45′ | 46°00′ | 46°00′ | 22′ | 2°00′ | 0.015 | 0.005 | 0.004 |
| No. 2 | 0.1410 | 0.0670 | 0.0655 | 0.750 | 0.875 | 0.219 | 0.0380 | 0.095 | 5°45′ | 3°00′ | 6°20′ | 46°00′ | 46°00′ | 17′ | 2°04′ | 0.015 | 0.008 | 0.006 |
| No. 3 | 0.2090 | 0.1020 | 0.1005 | 0.781 | 0.906 | 0.250 | 0.0530 | 0.155 | 5°45′ | 3°00′ | 6°20′ | 56°15′ | 46°00′ | 17′ | 2°04′ | 0.015 | 0.012 | 0.008 |
| No. 4 | 0.3120 | 0.1520 | 0.1505 | 0.844 | 0.969 | 0.359 | 0.0810 | 0.203 | 7°00′ | 4°23′ | 7°45′ | 56°15′ | 46°00′ | 22′ | 2°00′ | 0.015 | 0.020 | 0.014 |

[1] These dimensions are measured normal to the milling cut.



Copyright ASME International
Provided by IHS under license with ASME
No reproduction or networking permitted without license from IHS
Not for Resale

| APPENDIX | TYPE II RECESS |
|---|---|
| I | PENETRATION GAGING |

## PENETRATION GAGES FOR TYPE II RECESS

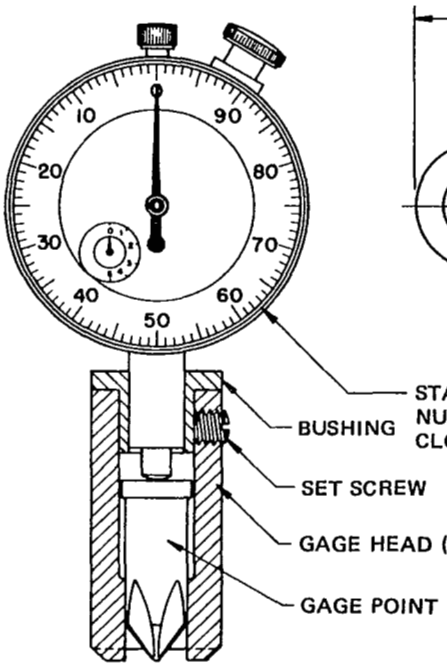


GAGE POINT IN ZERO POSITION
PENETRATION GAGE

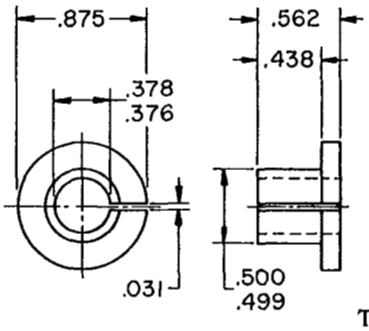


BUSHING

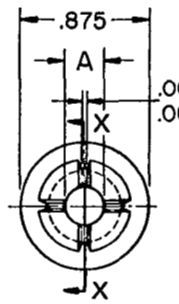


Tolerance ±0.005 unless otherwise specified.

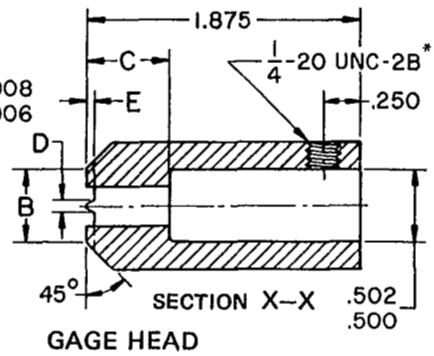


GAGE HEAD

**Dimensions of Gage Heads**

| Gage Diameter | A | B | C | D | E |
|---|---|---|---|---|---|
| | ±0.0001 | ±0.005 | ±0.005 | +0.002 −0.000 | +0.002 −0.000 |
| 0.093 | 0.0930 | 0.344 | 0.375 | 0.030 | 0.024 |
| 0.141 | 0.1410 | 0.375 | 0.438 | 0.046 | 0.036 |
| 0.246 | 0.2460 | 0.500 | 0.500 | 0.062 | 0.051 |
| 0.436 | 0.4360 | 0.688 | 0.562 | 0.094 | 0.078 |

*Gaging shall be per System 21, ANSI B1.3–1979.

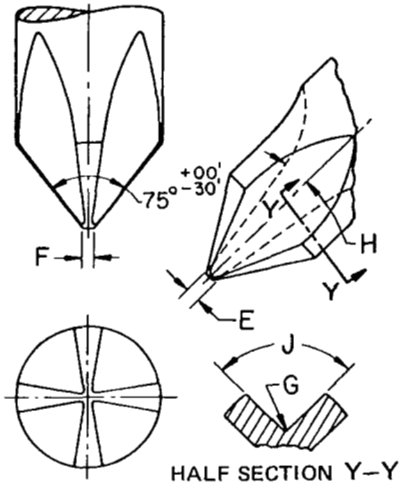


HALF SECTION Y–Y

ENLARGED POINT DETAIL

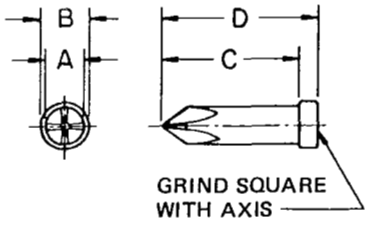


GAGE POINT

### Applicability of Gage Diameters to Recess Diameters and Screw Sizes

Although these gages may be used interchangeably, showing identical readings on those sizes of screws where dimension, B, of gage head is greater than the recess diameter, the following recommendations may be applied:

Use 0.093 Gage for recess diameters up to 0.150 in.*

Use 0.141 Gage for recess diameters of 0.150 and up to 0.270 in.

Use 0.246 Gage for recess diameters of 0.270 and up to 0.460 in.

Use 0.436 Gage for recess diameters of 0.460 and up to 0.700 in.

*It is not practical to gage screw sizes No. 0 and No. 1 having recess diameters of less than 0.102 in. maximum.

**Dimensions of Gage Points**

| Gage Diameter | A | B | C | D | E | F | G | H | J |
|---|---|---|---|---|---|---|---|---|---|
| | Point Dia | Dia | Length | Length | Point Width | Flat on End | Radius | Milling Angle | Side Flute Angle |
| | ±0.0001 | ±0.005 | ±0.005 | ±0.005 | +0.001 −0.000 | ±0.002 | +0.000 −0.001 | +05′ −00′ | +15′ −00′ |
| 0.093 | 0.0926 | 0.188 | 0.750 | 0.875 | 0.027 | 0.062 | 0.005 | 8°45′ | 90°00′ |
| 0.141 | 0.1406 | 0.250 | 0.875 | 1.000 | 0.027 | 0.062 | 0.005 | 8°45′ | 90°00′ |
| 0.246 | 0.2456 | 0.312 | 0.938 | 1.062 | 0.027 | 0.062 | 0.005 | 8°45′ | 90°00′ |
| 0.436 | 0.4356 | 0.469 | 1.125 | 1.250 | 0.027 | 0.062 | 0.005 | 8°45′ | 90°00′ |



Copyright ASME International
Provided by IHS under license with ASME
No reproduction or networking permitted without license from IHS
Not for Resale

# APPENDIX II

## WOBBLE GAGING OF RECESSED HEADS

Wobble gaging provides a means for determining the compatibility of cross recesses in the heads of screws with companion screw drivers and will indicate the point where deviations in the recess contours affects satisfactory driver engagement. Recesses which exhibit excessive wobble characteristics will result in poor screw driveability because of driver camout prior to attaining normal torque level; damage to recesses; and/or accelerated driver wear.

The allowable total wobble gaging limits for the various types of recesses included herein were predicated originally on the gaging of plain finish (unplated or uncoated) screws. However, subsequent experience has shown these limits to be suitable for the gaging of screws having coating thickness up to and including 0.0003 in. on significant surfaces. Screws having heavier coatings, which fail to meet the wobble gaging requirements, must be stripped of finish and gaged for acceptance or rejection in the plain condition.

Wobble gaging fixtures as illustrated on following page and appropriate cross recess master plug gages with handles and position indicators for the respective recess types are available through the screw suppliers. Dimensions of the points on master plug gages are, except for the body diameters tabulated herein, the same as those specified for the respective gage points in Appendix I, Penetration Gaging.

The screw to be gaged shall be placed into the screw holding chuck and oriented such that one set of recess wings is parallel to the upright back plate. The screw shall be so positioned and the chuck shall be tightened sufficiently to prevent any tilting of the screw in the chuck when taking wobble readings.

The position gage pointer and handle with the proper master plug gage for the recess size being checked shall be positioned in the slot of the degree scale on top plate and the point of the plug gage inserted into the screw recess. It is essential that registry between the cross lines of pointer and the recess wings be maintained. To correct any misalignment, the chuck position lock screw is loosened, the chuck is rotated until registry is obtained, and the chuck raised or lowered until the gage pointer is flush with the top of the degree scale. The chuck position lock screw is then tightened and the readings taken. The gage handle, with downward pressure applied, is moved from side to side until resistance is encountered and the total reading between points of travel of the gage pointer is recorded. The allowable angular wobble limits shall not exceed the values tabulated below. Cross lines on gage pointer should be rechecked with plug gage wings to make certain cross lines and gage wings are registered on identical radials.

**Gaging Limits for Type I and Type IA Recesses**

| Size of Recess Gage | Maximum Allowable Total Wobble | |
|---|---|---|
| | Type I | Type IA |
| No. 0 | * | * |
| No. 1 | 15° | 12° |
| No. 2 | 12° | 10° |
| No. 3 | 10° | 8° |
| No. 4 | 10° | 8° |

*Values not available at time of printing.

**Gaging Limits for Type II Recess**

| Recess Gage Diameter | Maximum Allowable Total Wobble |
|---|---|
| 0.093 | 12° |
| 0.141 | 10° |
| 0.246 | 8° |
| 0.436 | 6° |



Copyright ASME International
Provided by IHS under license with ASME
No reproduction or networking permitted without license from IHS
Not for Resale

| APPENDIX | RECESSED HEADS |
|---|---|
| II | WOBBLE GAGING |

## WOBBLE GAGING OF RECESSED HEADS (CONTINUED)

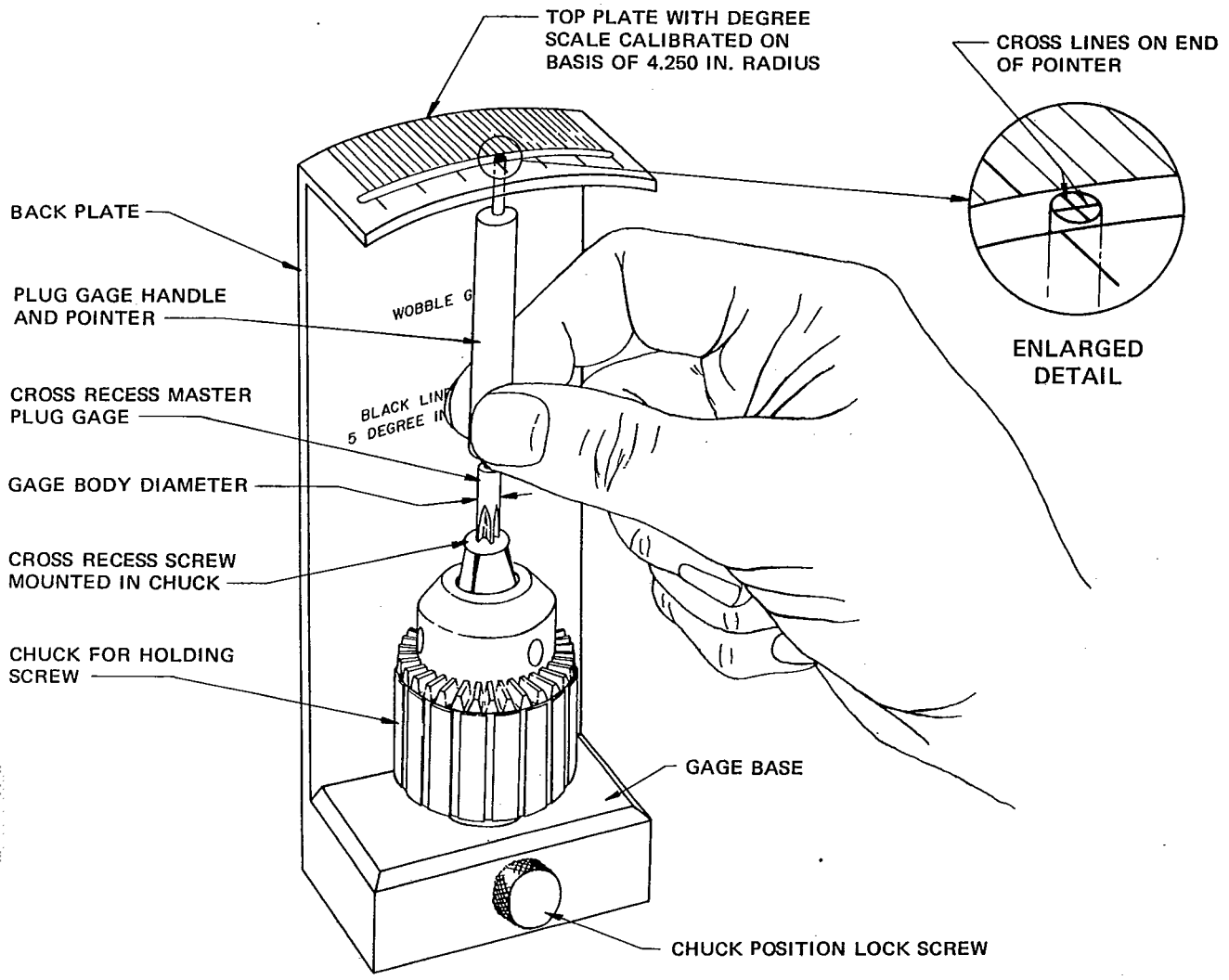


GAGING FIXTURE

**Gage Body Diameters**[1]

| Size of Recess Gage | Type I Recess | | Type IA Recess | | | |
|---|---|---|---|---|---|---|
| | Ground Gage | | Ground Gage | | Pressed Gage | |
| | Max | Min | Max | Min | Max | Min |
| No. 0 | 0.135 | 0.115 | 0.135 | 0.115 | — | — |
| No. 1 | 0.198 | 0.178 | 0.198 | 0.178 | 0.275 | 0.255 |
| No. 2 | 0.260 | 0.240 | 0.260 | 0.240 | 0.275 | 0.255 |
| No. 3 | 0.323 | 0.303 | 0.323 | 0.303 | 0.370 | 0.350 |
| No. 4 | 0.385 | 0.365 | 0.385 | 0.365 | 0.475 | 0.455 |

[1] Diameters of Type II recess gages are same as penetration gage points in Appendix I.



Copyright ASME International
Provided by IHS under license with ASME
No reproduction or networking permitted without license from IHS
Not for Resale

# APPENDIX III

## FORMULAS FOR DIMENSIONS

Where: D = Basic diameter of the screw.

### Flat Countersunk Head Screws

| Screw Size | Head Diameter | Head Height | Slot Depth |
|---|---|---|---|
| 0 thru 12, 16 and 20 | Max A = 2.040 D − 0.003 to sharp corner<br>Min A = 1.860 D − 0.013 with round or flat<br>Min A = 1.960 D − 0.013 to sharp corner Ref [1] | Max H = 0.619 D − 0.002<br>Min H = 0.552 D − 0.007 Ref [1] | Max T = 0.288 D − 0.002<br>Min T = 0.192 D − 0.002 |
| 14, 18 and 24 | No formula, see tables | No formula, see tables | No formula, see table |

[1] Values no longer tabulated, formulas are retained here for reference purposes only.

### Oval Countersunk Head Screws

| Screw Size | Head Diameter | Total Head Height | Slot Depth |
|---|---|---|---|
| 0 thru 12, 16 and 20 | Max A = 2.040 D − 0.003 to sharp corner<br>Min A = 1.860 D − 0.013 with round or flat<br>Min A = 1.960 D − 0.013 to sharp corner Ref [1] | Max O = 0.923 D + 0.001<br>Min O = 0.820 D − 0.008 | Max T = 0.556 D − 0.003<br>Min T = 0.460 D − 0.003 |
| 14, 18 and 24 | No formula, see tables | No formula, see tables | No formula, see table |

| Screw Size | Head Side Height |
|---|---|
| 0 thru 12, 16 and 20 | Max H = 0.619 D − 0.002<br>Min H = 0.552 D − 0.007 Ref [1] |
| 14, 18 and 24 | No formula, see tables |

[1] Values no longer tabulated, formulas are retained here for reference purposes only.

### Pan Head Screws

| Screw Size | Head Diameter | Head Height | | Slot Depth |
|---|---|---|---|---|
| | | Slotted | Recessed | |
| 0 thru 12 | Max A = 1.980 D − 0.003<br>Min A = 1.940 D − 0.012 | Max H = 0.550 D + 0.006<br>Min H = 0.520 D | Max H = 0.692 D + 0.002<br>Min H = 0.652 D − 0.003 | Max T = 0.350 D + 0.001<br>Min T = 0.300 D − 0.004 |
| 16 and 20 | Max A = 1.980 D − 0.003<br>Min A = 1.940 D − 0.012 | Max H = 0.550 D + 0.006<br>Min H = 0.520 D | Max H = 0.692 D + 0.002<br>Min H = 0.652 D − 0.001 | Max T = 0.293 D + 0.014<br>Min T = 0.246 D + 0.008 |
| 14, 18 and 24 | No formula, see tables | No formula, see table | No formula, see tables | No formula, see table |

### Round Head Screws

| Screw Size | Head Diameter | Head Height | Slot Depth |
|---|---|---|---|
| 0 thru 24 | Max A = 1.887 D<br>Min A = 1.813 D − 0.010 | Max H = 0.645 D + 0.014<br>Min H = 0.615 D + 0.006 | Max T = 0.367 D + 0.017<br>Min T = 0.277 D + 0.013 |



Copyright ASME International
Provided by IHS under license with ASME
No reproduction or networking permitted without license from IHS
Not for Resale

APPENDIX III

# FORMULAS

## FORMULAS FOR DIMENSIONS (CONTINUED)

Where: D = Basic diameter of the screw.

### Slot Width in Slotted Head Screws

| Screw Size | Basic Width | Tolerance | | |
|---|---|---|---|---|
| | | Screw Size | Plus | Minus |
| 0 thru 10 | Basic Slot Width = 0.280 D + 0.004 adjusted to standard cutter size. | 0 and 1 | 0.003 | 0.004 |
| | | 2, 3, 4 and 5 | 0.003 | 0.005 |
| | | 6, 7, 8 and 9 | 0.004 | 0.005 |
| 12 thru 24 | Basic Slot Width = 0.160 D + 0.024 adjusted to standard cutter size. | 10, 12, 14 and 16 | 0.005 | 0.006 |
| | | 18 and 20 | 0.005 | 0.007 |
| | | 24 | 0.005 | 0.008 |



Copyright ASME International
Provided by IHS under license with ASME
No reproduction or networking permitted without license from IHS
Not for Resale

# APPENDIX IV

## DIMENSIONS OF ROUND HEAD SCREWS

*– NON-PREFERRED FOR NEW DESIGNS –*
*– USE PAN HEAD –*

(See Paragraph 1.2.4 in Introductory Notes and Table 10)

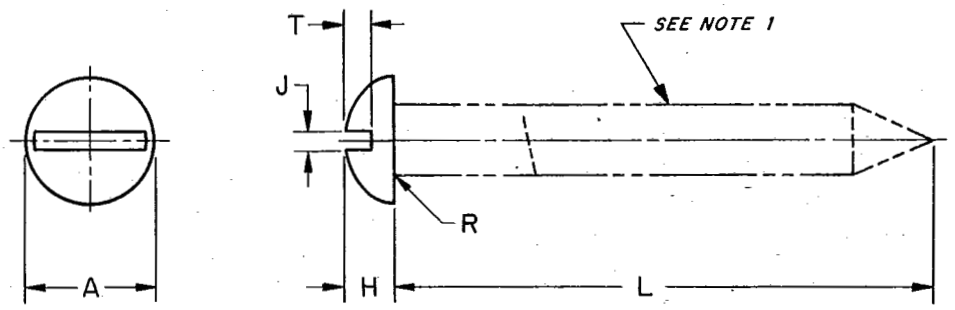


**Dimensions of Slotted Round Head Wood Screws**

| Nominal Size [2] or Basic Screw Diameter | A | | H | | J | | T | | R |
|---|---|---|---|---|---|---|---|---|---|
| | Head Diameter | | Head Height | | Slot Width | | Slot Depth | | Fillet Radius |
| | Max | Min | Max | Min | Max | Min | Max | Min | Max |
| 0 0.060 | 0.113 | 0.099 | 0.053 | 0.043 | 0.023 | 0.016 | 0.039 | 0.029 | 0.016 |
| 1 0.073 | 0.138 | 0.122 | 0.061 | 0.051 | 0.026 | 0.019 | 0.044 | 0.033 | 0.016 |
| 2 0.086 | 0.162 | 0.146 | 0.069 | 0.059 | 0.031 | 0.023 | 0.048 | 0.037 | 0.016 |
| 3 0.099 | 0.187 | 0.169 | 0.078 | 0.067 | 0.035 | 0.027 | 0.053 | 0.040 | 0.016 |
| 4 0.112 | 0.211 | 0.193 | 0.086 | 0.075 | 0.039 | 0.031 | 0.058 | 0.044 | 0.016 |
| 5 0.125 | 0.236 | 0.217 | 0.095 | 0.083 | 0.043 | 0.035 | 0.063 | 0.047 | 0.031 |
| 6 0.138 | 0.260 | 0.240 | 0.103 | 0.091 | 0.048 | 0.039 | 0.068 | 0.051 | 0.031 |
| 7 0.151 | 0.285 | 0.264 | 0.111 | 0.099 | 0.048 | 0.039 | 0.072 | 0.055 | 0.031 |
| 8 0.164 | 0.309 | 0.287 | 0.120 | 0.107 | 0.054 | 0.045 | 0.077 | 0.058 | 0.031 |
| 9 0.177 | 0.334 | 0.311 | 0.128 | 0.115 | 0.054 | 0.045 | 0.082 | 0.062 | 0.031 |
| 10 0.190 | 0.359 | 0.334 | 0.137 | 0.123 | 0.060 | 0.050 | 0.087 | 0.065 | 0.031 |
| 12 0.216 | 0.408 | 0.382 | 0.153 | 0.139 | 0.067 | 0.056 | 0.096 | 0.073 | 0.031 |
| 14 0.242 | 0.457 | 0.429 | 0.170 | 0.155 | 0.075 | 0.064 | 0.106 | 0.080 | 0.046 |
| 16 0.268 | 0.506 | 0.476 | 0.187 | 0.171 | 0.075 | 0.064 | 0.115 | 0.087 | 0.046 |
| 18 0.294 | 0.555 | 0.523 | 0.204 | 0.187 | 0.084 | 0.072 | 0.125 | 0.094 | 0.046 |
| 20 0.320 | 0.604 | 0.570 | 0.220 | 0.203 | 0.084 | 0.072 | 0.134 | 0.101 | 0.046 |
| 24 0.372 | 0.702 | 0.664 | 0.254 | 0.235 | 0.094 | 0.081 | 0.154 | 0.116 | 0.046 |

1 See Table 1 for dimensions applicable to thread and body features.
2 Where specifying nominal size in decimals, zeros preceding the decimal shall be omitted.

For additional requirements refer to General Data on Pages 2 and 3.



Copyright ASME International
Provided by IHS under license with ASME
No reproduction or networking permitted without license from IHS
Not for Resale

| APPENDIX | TYPE I RECESS |
|---|---|
| IV | ROUND |

## DIMENSIONS OF ROUND HEAD SCREWS (CONTINUED)

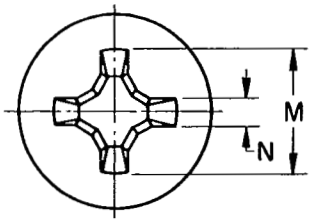


This type of recess has a large center opening, tapered wings, and blunt bottom, with all edges relieved or rounded.

*– NON-PREFERRED FOR NEW DESIGNS –*
*– USE PAN HEAD –*

(See Paragraph 1.2.4 in Introductory Notes and Table 11)

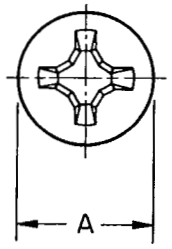


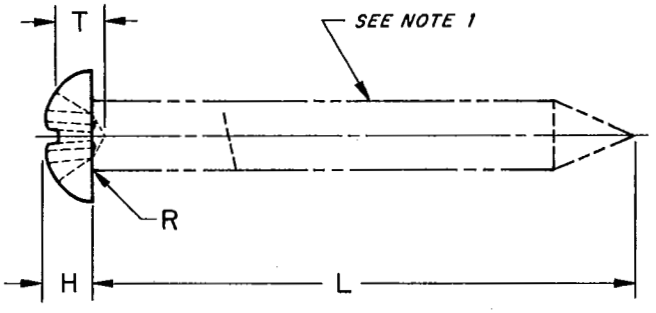


### Dimensions of Type I Cross Recessed Round Head Wood Screws

| Nominal Size[2] or Basic Screw Diameter | A Head Diameter | | H Head Height | | M Recess Diameter | | T Recess Depth | | N Recess Width | Driver Size | Recess Penetration Gaging Depth | | R Fillet Radius |
|---|---|---|---|---|---|---|---|---|---|---|---|---|---|
| | Max | Min | Max | Min | Max | Min | Max | Min | Min | | Max | Min | Max |
| 0 0.060 | 0.113 | 0.099 | 0.053 | 0.043 | 0.073 | 0.060 | 0.042 | 0.022 | 0.014 | 0 | 0.035 | 0.015 | 0.016 |
| 1 0.073 | 0.138 | 0.122 | 0.061 | 0.051 | 0.082 | 0.069 | 0.052 | 0.033 | 0.015 | 0 | 0.045 | 0.026 | 0.016 |
| 2 0.086 | 0.162 | 0.146 | 0.069 | 0.059 | 0.114 | 0.101 | 0.064 | 0.042 | 0.018 | 1 | 0.057 | 0.035 | 0.016 |
| 3 0.099 | 0.187 | 0.169 | 0.078 | 0.067 | 0.122 | 0.109 | 0.073 | 0.052 | 0.019 | 1 | 0.066 | 0.045 | 0.016 |
| 4 0.112 | 0.211 | 0.193 | 0.086 | 0.075 | 0.130 | 0.117 | 0.083 | 0.063 | 0.019 | 1 | 0.076 | 0.056 | 0.016 |
| 5 0.125 | 0.236 | 0.217 | 0.095 | 0.083 | 0.154 | 0.141 | 0.074 | 0.046 | 0.027 | 2 | 0.063 | 0.035 | 0.031 |
| 6 0.138 | 0.260 | 0.240 | 0.103 | 0.091 | 0.162 | 0.149 | 0.084 | 0.056 | 0.027 | 2 | 0.073 | 0.045 | 0.031 |
| 7 0.151 | 0.285 | 0.264 | 0.111 | 0.099 | 0.170 | 0.157 | 0.092 | 0.066 | 0.028 | 2 | 0.081 | 0.055 | 0.031 |
| 8 0.164 | 0.309 | 0.287 | 0.120 | 0.107 | 0.178 | 0.165 | 0.101 | 0.075 | 0.030 | 2 | 0.090 | 0.064 | 0.031 |
| 9 0.177 | 0.334 | 0.311 | 0.128 | 0.115 | 0.186 | 0.173 | 0.110 | 0.084 | 0.030 | 2 | 0.099 | 0.073 | 0.031 |
| 10 0.190 | 0.359 | 0.334 | 0.137 | 0.123 | 0.195 | 0.182 | 0.119 | 0.093 | 0.031 | 2 | 0.108 | 0.082 | 0.031 |
| 12 0.216 | 0.408 | 0.382 | 0.153 | 0.139 | 0.249 | 0.236 | 0.125 | 0.099 | 0.032 | 3 | 0.108 | 0.082 | 0.031 |
| 14 0.242 | 0.457 | 0.429 | 0.170 | 0.155 | 0.265 | 0.252 | 0.142 | 0.116 | 0.034 | 3 | 0.125 | 0.099 | 0.046 |
| 16 0.268 | 0.506 | 0.476 | 0.187 | 0.171 | 0.281 | 0.268 | 0.159 | 0.136 | 0.038 | 3 | 0.142 | 0.119 | 0.046 |
| 18 0.294 | 0.555 | 0.523 | 0.204 | 0.187 | 0.339 | 0.326 | 0.176 | 0.151 | 0.057 | 4 | 0.156 | 0.131 | 0.046 |
| 20 0.320 | 0.604 | 0.570 | 0.220 | 0.203 | 0.356 | 0.343 | 0.194 | 0.168 | 0.059 | 4 | 0.174 | 0.148 | 0.046 |
| 24 0.372 | 0.702 | 0.664 | 0.254 | 0.235 | 0.387 | 0.374 | 0.228 | 0.202 | 0.064 | 4 | 0.208 | 0.182 | 0.046 |

1 See Table 1 for dimensions applicable to thread and body features.
2 Where specifying nominal size in decimals, zeros preceding the decimal shall be omitted.

For additional requirements refer to General Data on Pages 2 and 3.



Copyright ASME International
Provided by IHS under license with ASME
No reproduction or networking permitted without license from IHS
Not for Resale

## DIMENSIONS OF ROUND HEAD SCREWS (CONTINUED)

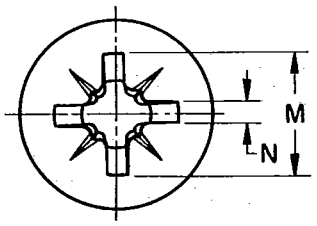


This type of recess has a large center opening, wide straight wings, and blunt bottom, with all edges relieved or rounded.

*– NON-PREFERRED FOR NEW DESIGNS –*
*– USE PAN HEAD –*

(See Paragraph 1.2.4 in Introductory Notes and Table 12)

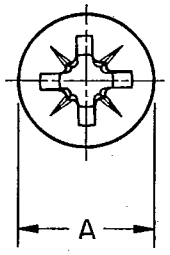


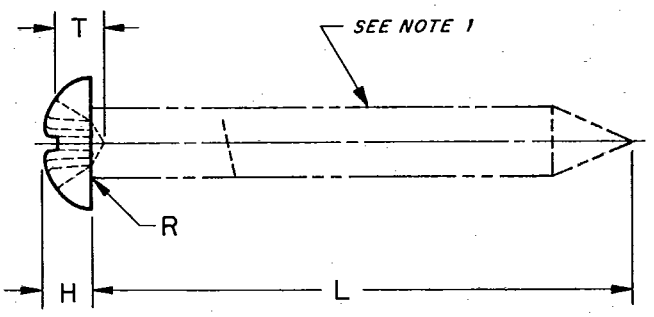


### Dimensions of Type IA Cross Recessed Round Head Wood Screws

| Nominal Size[2] or Basic Screw Diameter | A Head Diameter | | H Head Height | | M Recess Diameter | | T Recess Depth | | N Recess Width | Driver Size | Recess Penetration Gaging Depth | | R Fillet Radius |
|---|---|---|---|---|---|---|---|---|---|---|---|---|---|
| | Max | Min | Max | Min | Max | Min | Max | Min | Min | | Max | Min | Max |
| 0 0.060 | 0.113 | 0.099 | 0.053 | 0.043 | 0.067 | 0.054 | 0.040 | 0.024 | 0.018 | 0 | 0.033 | 0.017 | 0.016 |
| 1 0.073 | 0.138 | 0.122 | 0.061 | 0.051 | 0.074 | 0.061 | 0.047 | 0.031 | 0.018 | 0 | 0.040 | 0.024 | 0.016 |
| 2 0.086 | 0.162 | 0.146 | 0.069 | 0.059 | 0.104 | 0.091 | 0.064 | 0.048 | 0.028 | 1 | 0.053 | 0.037 | 0.016 |
| 3 0.099 | 0.187 | 0.169 | 0.078 | 0.067 | 0.112 | 0.099 | 0.073 | 0.057 | 0.029 | 1 | 0.062 | 0.046 | 0.016 |
| 4 0.112 | 0.211 | 0.193 | 0.086 | 0.075 | 0.122 | 0.109 | 0.083 | 0.067 | 0.029 | 1 | 0.072 | 0.056 | 0.016 |
| 5 0.125 | 0.236 | 0.217 | 0.095 | 0.083 | 0.154 | 0.141 | 0.084 | 0.066 | 0.040 | 2 | 0.068 | 0.050 | 0.031 |
| 6 0.138 | 0.260 | 0.240 | 0.103 | 0.091 | 0.162 | 0.149 | 0.092 | 0.074 | 0.040 | 2 | 0.076 | 0.058 | 0.031 |
| 7 0.151 | 0.285 | 0.264 | 0.111 | 0.099 | 0.170 | 0.157 | 0.101 | 0.083 | 0.041 | 2 | 0.085 | 0.067 | 0.031 |
| 8 0.164 | 0.309 | 0.287 | 0.120 | 0.107 | 0.177 | 0.164 | 0.108 | 0.090 | 0.041 | 2 | 0.092 | 0.074 | 0.031 |
| 9 0.177 | 0.334 | 0.311 | 0.128 | 0.115 | 0.185 | 0.172 | 0.116 | 0.098 | 0.041 | 2 | 0.100 | 0.082 | 0.031 |
| 10 0.190 | 0.359 | 0.334 | 0.137 | 0.123 | 0.193 | 0.180 | 0.124 | 0.106 | 0.041 | 2 | 0.108 | 0.090 | 0.031 |
| 12 0.216 | 0.408 | 0.382 | 0.153 | 0.139 | 0.254 | 0.241 | 0.139 | 0.121 | 0.056 | 3 | 0.117 | 0.099 | 0.031 |
| 14 0.242 | 0.457 | 0.429 | 0.170 | 0.155 | 0.273 | 0.260 | 0.159 | 0.141 | 0.057 | 3 | 0.137 | 0.119 | 0.046 |
| 16 0.268 | 0.506 | 0.476 | 0.187 | 0.171 | 0.284 | 0.271 | 0.171 | 0.153 | 0.057 | 3 | 0.149 | 0.131 | 0.046 |
| 18 0.294 | 0.555 | 0.523 | 0.204 | 0.187 | 0.328 | 0.315 | 0.178 | 0.160 | 0.084 | 4 | 0.152 | 0.134 | 0.046 |
| 20 0.320 | 0.604 | 0.570 | 0.220 | 0.203 | 0.341 | 0.328 | 0.191 | 0.173 | 0.086 | 4 | 0.164 | 0.146 | 0.046 |
| 24 0.372 | 0.702 | 0.664 | 0.254 | 0.235 | 0.377 | 0.364 | 0.228 | 0.210 | 0.086 | 4 | 0.201 | 0.183 | 0.046 |

1 See Table 1 for dimensions applicable to thread and body features.
2 Where specifying nominal size in decimals, zeros preceding the decimal shall be omitted.

For additional requirements refer to General Data on Pages 2 and 3.



Copyright ASME International
Provided by IHS under license with ASME
No reproduction or networking permitted without license from IHS
Not for Resale

| APPENDIX | TYPE II RECESS |
|---|---|
| IV | ROUND |

## DIMENSIONS OF ROUND HEAD SCREWS (CONTINUED)

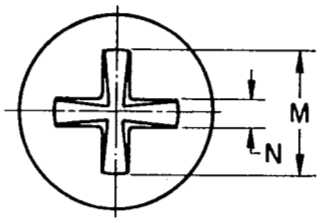


This type of recess consists of two intersecting slots with parallel sides converging to a slightly truncated apex at bottom of recess.

*– NON-PREFERRED FOR NEW DESIGNS –*
*– USE PAN HEAD –*

(See Paragraph 1.2.4 in Introductory Notes and Table 13)

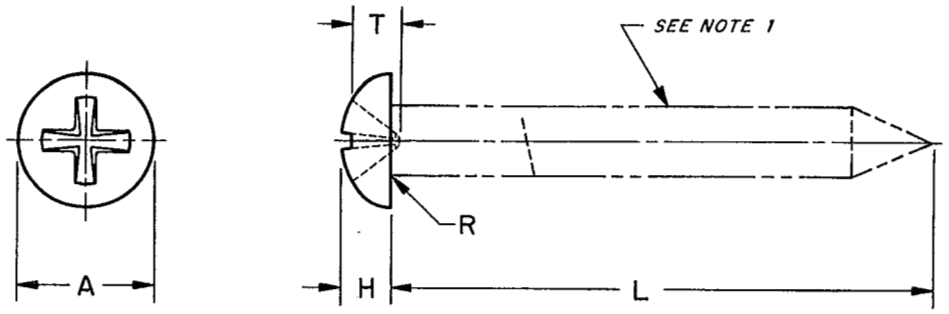


### Dimensions of Type II Cross Recessed Round Head Wood Screws

| Nominal Size [2] or Basic Screw Diameter | A | | H | | M | | T | | N | Driver Size | Recess Penetration Gaging Depth | | R |
|---|---|---|---|---|---|---|---|---|---|---|---|---|---|
| | Head Diameter | | Head Height | | Recess Diameter | | Recess Depth | | Recess Width | | | | Fillet Radius |
| | Max | Min | Max | Min | Max | Min | Max | Min | Min | | Max | Min | Max |
| 0 0.060 | 0.113 | 0.099 | 0.053 | 0.043 | 0.079 | 0.069 | 0.039 | 0.028 | 0.021 | Point same on all drivers | * | * | 0.016 |
| 1 0.073 | 0.138 | 0.122 | 0.061 | 0.051 | 0.097 | 0.085 | 0.051 | 0.038 | 0.023 | | * | * | 0.016 |
| 2 0.086 | 0.162 | 0.146 | 0.069 | 0.059 | 0.114 | 0.102 | 0.062 | 0.049 | 0.026 | | 0.036 | 0.024 | 0.016 |
| 3 0.099 | 0.187 | 0.169 | 0.078 | 0.067 | 0.131 | 0.118 | 0.073 | 0.060 | 0.028 | | 0.047 | 0.035 | 0.016 |
| 4 0.112 | 0.211 | 0.193 | 0.086 | 0.075 | 0.148 | 0.135 | 0.082 | 0.069 | 0.031 | | 0.058 | 0.046 | 0.016 |
| 5 0.125 | 0.236 | 0.217 | 0.095 | 0.083 | 0.165 | 0.152 | 0.094 | 0.080 | 0.033 | | 0.070 | 0.057 | 0.031 |
| 6 0.138 | 0.260 | 0.240 | 0.103 | 0.091 | 0.182 | 0.168 | 0.105 | 0.090 | 0.036 | | 0.081 | 0.067 | 0.031 |
| 7 0.151 | 0.285 | 0.264 | 0.111 | 0.099 | 0.199 | 0.185 | 0.116 | 0.102 | 0.038 | | 0.092 | 0.079 | 0.031 |
| 8 0.164 | 0.309 | 0.287 | 0.120 | 0.107 | 0.216 | 0.201 | 0.122 | 0.107 | 0.041 | | 0.103 | 0.089 | 0.031 |
| 9 0.177 | 0.334 | 0.311 | 0.128 | 0.115 | 0.234 | 0.218 | 0.133 | 0.118 | 0.043 | | 0.114 | 0.100 | 0.031 |
| 10 0.190 | 0.359 | 0.334 | 0.137 | 0.123 | 0.251 | 0.234 | 0.145 | 0.128 | 0.046 | | 0.126 | 0.110 | 0.031 |
| 12 0.216 | 0.408 | 0.382 | 0.153 | 0.139 | 0.286 | 0.267 | 0.167 | 0.150 | 0.051 | | 0.148 | 0.132 | 0.031 |
| 14 0.242 | 0.457 | 0.429 | 0.170 | 0.155 | 0.320 | 0.300 | 0.182 | 0.163 | 0.056 | | 0.171 | 0.153 | 0.046 |
| 16 0.268 | 0.506 | 0.476 | 0.187 | 0.171 | 0.354 | 0.333 | 0.204 | 0.185 | 0.061 | | 0.193 | 0.175 | 0.046 |
| 18 0.294 | 0.555 | 0.523 | 0.204 | 0.187 | 0.388 | 0.366 | 0.226 | 0.206 | 0.066 | | 0.215 | 0.196 | 0.046 |
| 20 0.320 | 0.604 | 0.570 | 0.220 | 0.203 | 0.423 | 0.399 | 0.249 | 0.228 | 0.071 | | 0.238 | 0.218 | 0.046 |
| 24 0.372 | 0.702 | 0.664 | 0.254 | 0.235 | 0.491 | 0.465 | 0.293 | 0.271 | 0.081 | | 0.282 | 0.261 | 0.046 |

1 See Table 1 for dimensions applicable to thread and body features.
2 Where specifying nominal size in decimals, zeros preceding the decimal shall be omitted.
* Not practical to gage.

For additional requirements refer to General Data on Pages 2 and 3.



Copyright ASME International
Provided by IHS under license with ASME
No reproduction or networking permitted without license from IHS
Not for Resale

## AMERICAN STANDARDS FOR SCREW THREADS, BOLTS, NUTS, RIVETS, SCREWS AND SIMILAR FASTENERS

Unified Screw Threads (UN and UNR Thread Form) . . . . . B1.1–1974
Nomenclature, Definitions, and Letter Symbols for Screw Threads . . . . . B1.7–1977
Baseless Inch Screw Threads 7°/45° Form With 0.6 Pitch Basic Height of Thread Engagement . . . . . B1.9–1973(R1979)
Unified Miniature Screw Threads . . . . . B1.10–1958
Microscope Objective Thread . . . . . B1.11–1958(R1978)
Class 5 Interference – Fit Thread . . . . . B1.12–1972
Small Solid Rivets . . . . . B18.1.1–1972(R1977)
Square and Hex Bolts and Screws, Inch Series . . . . . B18.2.1–1981
Square and Hex Nuts . . . . . B18.2.2–1972
Socket Cap, Shoulder and Set Screws, Inch Series . . . . . B18.3–1981
Round Head Bolts (Inch Series) . . . . . B18.5–1978
Wood Screws (Inch Series) . . . . . B18.6.1–1981
Slotted Head Cap Screws, Square Head Set Screws, and Slotted Headless Set Screws . . . . . B18.6.2–1972(R1977)
Machine Screws and Machine Screw Nuts . . . . . B18.6.3–1972(R1977)
Thread Forming and Thread Cutting Tapping Screws and Metallic Drive Screws (Inch Series) . . . . . B18.6.4–1981
General Purpose Semi-Tubular Rivets, Full Tubular Rivets, Split Rivets and Rivet Caps . . . . . B18.7–1972(R1980)
Plow Bolts . . . . . B18.9–1958(R1977)
Track Bolts and Nuts . . . . . B18.10–1963(R1975)
Miniature Screws . . . . . B18.11–1961(R1975)
Glossary of Terms for Mechanical Fasteners . . . . . B18.12–1962(R1981)
Screw and Washer Assemblies–Sems . . . . . B18.13–1965(R1975)
Lock Washers . . . . . B18.21.1–1972
Plain Washers . . . . . B18.22.1–1965(R1981)

Binders for holding standards are available.

A complete list of American Standards published by The American Society of Mechanical Engineers is obtainable upon request.

M00005

Copyright ASME International
Provided by IHS under license with ASME
No reproduction or networking permitted without license from IHS
Not for Resale