Erratum
to
ASME B18.5.2.1M-1996
Metric Round Head Short Square Neck Bolts

On page 5, Table 1 and figure to Table 1 revised. Revisions appear on the overleaf.

THE AMERICAN SOCIETY OF MECHANICAL ENGINEERS
Three Park Avenue, New York, NY 10016-5990

October 2001

L6496E

Copyright ASME International
Provided by IHS under license with ASME
No reproduction or networking permitted without license from IHS

Not for Resale

Copyright ASME International
Provided by IHS under license with ASME
No reproduction or networking permitted without license from IHS

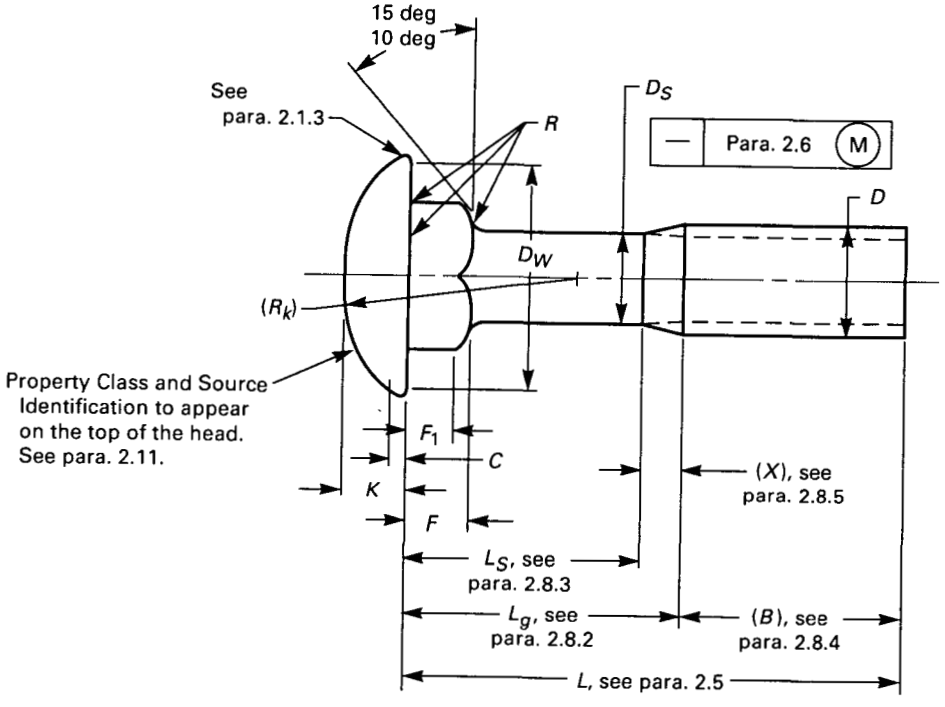

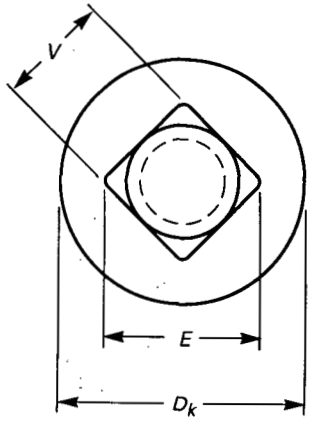

TABLE 1 DIMENSIONS OF ROUND HEAD SHORT SQUARE NECK BOLTS

DXP	D_s		D_k	D_w	K		C		E		V		F		F_1	(R_k)	R	
Nominal Bolt Size and Thread Pitch	Body Diameter		Head Diameter	Bearing Surface Diameter	Head Height		Head Edge Thickness		Square Width Across Corners		Square Width Across Flats		Square Depth		Square Corner Depth	Head Radius	Fillet Radius	
	max.	min.	max.	min.	max.	min.	max.	min.	max.	min.	max.	min.	max.	min.	min.	ref.	max.	min.
M 6 × 1	6.00	5.21	14.2	12.2	3.6	3.0	1.9	1.1	**9.16**	7.64	6.48	5.88	3.0	2.4	1.9	**10.7**	0.5	**0.25**
M 8 × 1.25	8.00	7.04	18.0	15.8	4.8	4.0	2.2	1.2	**12.13**	10.20	8.58	7.85	3.0	2.4	1.9	**12.5**	0.8	**0.4**
M 10 × 1.5	10.00	8.86	22.3	19.6	5.8	5.0	2.5	1.5	**14.96**	12.80	10.58	9.85	4.0	3.2	2.6	**15.5**	0.8	**0.4**
M 12 × 1.75	12.00	10.68	26.6	23.8	6.8	6.0	2.8	1.8	**17.96**	15.37	12.70	11.82	4.0	3.2	2.6	**19.0**	1.2	**0.6**
M 14 × 2	**14.00**	**12.50**	**30.5**	**27.6**	**7.9**	**7.0**	**3.3**	**2.1**	**20.79**	**17.97**	**14.70**	**13.82**	**4.0**	**3.2**	**2.6**	**21.9**	**1.2**	**0.6**
M 16 × 2	16.00	14.50	35.0	31.9	8.9	8.0	3.6	2.4	**23.62**	20.57	16.70	15.82	5.0	4.2	3.4	**25.5**	**1.2**	**0.6**
M 20 × 2.5	20.00	18.16	43.0	39.9	10.9	10.0	4.2	3.0	**29.47**	25.73	20.84	19.79	5.0	4.2	3.4	**31.9**	**1.6**	**0.8**
See Para.	2.4		2.1.3	2.1.3, 2.1.4	2.1.2, 2.11		2.13		2.2.2, 2.2.3				2.2.1		2.2.2, 2.2.3	2.1.1	2.3	

Not for Resale

STD.ASME B18.5.2.1M-ENGL 1996 ■ 0759670 0589681 627 ■

ASME B18.5.2.1M-1996

[Revision of ANSI B18.5.2.1M-1981 (R1995)]

METRIC ROUND HEAD SHORT SQUARE NECK BOLTS

AN AMERICAN NATIONAL STANDARD



The American Society of Mechanical Engineers

Copyright ASME International
Provided by IHS under license with ASME
No reproduction or networking permitted without license from IHS
Not for Resale



The American Society of Mechanical Engineers

AN AMERICAN NATIONAL STANDARD

METRIC ROUND HEAD SHORT SQUARE NECK BOLTS

ASME B18.5.2.1M-1996

[Revision of ANSI B18.5.2.1M-1981 (R1995)]

Copyright ASME International
Provided by IHS under license with ASME
No reproduction or networking permitted without license from IHS

Not for Resale

Date of Issuance: April 1, 1998

This Standard will be revised when the Society approves the issuance of a new edition. There will be no addenda or written interpretations of the requirements of this Standard issued to this edition.

ASME is the registered trademark of The American Society of Mechanical Engineers.

This code or standard was developed under procedures accredited as meeting the criteria for American National Standards. The Consensus Committee that approved the code or standard was balanced to assure that individuals from competent and concerned interests have had an opportunity to participate. The proposed code or standard was made available for public review and comment which provides an opportunity for additional public input from industry, academia, regulatory agencies, and the public-at-large.

ASME does not "approve," "rate," or "endorse" any item, construction, proprietary device, or activity.

ASME does not take any position with respect to the validity of any patent rights asserted in connection with any items mentioned in this document, and does not undertake to insure anyone utilizing a standard against liability for infringement of any applicable Letters Patent, nor assume any such liability. Users of a code or standard are expressly advised that determination of the validity of any such patent rights, and the risk of infringement of such rights, is entirely their own responsibility.

Participation by federal agency representative(s) or person(s) affiliated with industry is not to be interpreted as government or industry endorsement of this code or standard.

ASME accepts responsibility for only those interpretations issued in accordance with governing ASME procedures and policies which preclude the issuance of interpretations by individual volunteers.

No part of this document may be reproduced in any form,
in an electronic retrieval system or otherwise,
without the prior written permission of the publisher.

The American Society of Mechanical Engineers
345 E. 47th Street New York, NY 10017

Copyright © 1998 by
THE AMERICAN SOCIETY OF MECHANICAL ENGINEERS
All Rights Reserved
Printed in U.S.A.

Copyright ASME International
Provided by IHS under license with ASME
No reproduction or networking permitted without license from IHS

Not for Resale

FOREWORD

(This Foreword is not part of ASME B18.5.2.1M-1996.)

ASME Standards Committee B18 for the Standardization of Bolts, Nuts, Rivets, Screws, Washers, and Similar Fasteners (formerly American National Standards Committee B18), was originated in March 1922 as Sectional Committee B18 under the aegis of the American Engineering Standards Committee (later the American Standards Association, the United States of America Standards Institute and, as of October 6, 1969, the American National Standards Institute, Inc.) with the Society of Automotive Engineers and the American Society of Mechanical Engineers as joint sponsors. Subcommittees 2, 5, and 6 (later redesignated Subcommittee 9) were subsequently established and charged with the responsibilities for the technical content of standards for external drive bolts and nuts, round unslotted head bolts, and plow bolts and nuts, round unslotted head bolts, and plow bolts, respectively. Subcommittee 9 was merged into Subcommittee 5 in 1977.

In October 1978 drafting of this Standard was started. The draft was circulated for letter ballot of Subcommittee 5 and Committee B18 on March 27, 1980. Following approval by Subcommittee 5 and Committee B18, this Standard was approved by the secretariat and submitted to the American National Standards Institute for designation as an American National Standard. This was granted on August 14, 1981.

In December 1986, ASME Committee B18 agreed to combine Subcommittee 5 into Subcommittee 2, since the products addressed by the two Subcommittees were quite similar. Committee B18 further agreed the designations of the Subcommittee 2 and 5 documents not be changed, since such changes would adversely affect current references to these Standards.

Following approval by Subcommittee 2 and Committee B18, this revision was approved by the secretariat and submitted to the American National Standards Institute for approval as an American National Standard. This was granted on March 8, 1996.

Copyright ASME International
Provided by IHS under license with ASME
No reproduction or networking permitted without license from IHS
Not for Resale

ASME B18 STANDARDS COMMITTEE
Standardization of Bolts, Nuts, Rivets, Screws, Washers, and Similar Fasteners

(The following is the roster of the Committee at the time of approval of this Standard.)

OFFICERS

K. E. McCullough, *Chair*
D. A. Clever, *Vice Chair*
E. Schwartz, *Vice Chair*
A. M. Nickles, *Secretary*

COMMITTEE PERSONNEL

J. C. Akins, Safety Socket Screw Corporation
J. B. Belford, Lawson Products, Inc.
D. J. Bloomfield, Illinois Tool Works, Inc.
J. A. Buda, SPS Technologies, Inc.
R. M. Byrne, Trade Association Management, Inc.
A. P. Cockman, Ford Motor Co.
A. C. DiCola, Wrought Washer Manufacturing, Inc.
B. A. Dusina, Federal Screw Works
H. W. Ellison, Consultant
G. A. Gobb, Consulting Engineer
R. J. Harrington, Spirol International Corp.
A. Herskovitz, U.S. Army
A. C. Hood, ACH Technologies
F. W. Kern, Society of Automotive Engineers
W. H. Kopke, ITW Shakeproof Industrial Products
P. D. Korsmo, Consultant
J. G. Langenstein, Caterpillar, Inc.
M. Levinson, ITW Shakeproof Industrial Products
J. B. Levy, Consultant
D. J. Miley, Caterpillar, Inc.
M. D. Prasad, General Motors Corp.
W. Schevey, BGM Fastener Co., Inc.
R. M. Serabin, Bowman Distribution
R. D. Strong, General Motors Corp.
J. F. Sullivan, Accurate Fasteners, Inc.
R. L. Tennis, Caterpillar, Inc.
S. W. Vass, Lake Erie Screw Corp.
R. G. Weber, Fairfield University
C. J. Wilson, Industrial Fasteners Institute
R. B. Wright, Wright Tools Co.
J. G. Zeratsky, National Rivet & Manufacturing Co.

Copyright ASME International
Provided by IHS under license with ASME
No reproduction or networking permitted without license from IHS
Not for Resale

SUBCOMMITTEE 2 — EXTERNAL DRIVE FASTENERS

D. A. Clever, *Chair,* Deere & Co.
R. M. Byrne, Trade Association Management, Inc.
A. P. Cockman, Ford Motor Co.
R. J. Corbett, Huck International Industrial Fasteners
B. A. Dusina, Federal Screw Works
J. Greenslade, Greenslade & Co.
A. Herskovitz, U.S. Army
K. E. McCullough, Consultant
D. J. Miley, Caterpillar, Inc.
M. D. Prasad, General Motors Corp.
R. D. Strong, General Motors Corp.
R. L. Tennis, Caterpillar, Inc.
S. W. Vass, Lake Erie Screw Corp.
W. K. Wilcox, Naval Sea Systems Command
C. J. Wilson, Industrial Fasteners Institute

Copyright ASME International
Provided by IHS under license with ASME
No reproduction or networking permitted without license from IHS
Not for Resale

CONTENTS

Foreword iii
Committee Roster v

1 Introductory Notes 1
2 General Data 2

Tables

1 Dimension of Round Head Short Square Neck Bolts 5
2 Maximum Grip Lengths, L_g, and Minimum Body Lengths, L_s 6
3 Thread Lengths 7
4 Length Tolerances 7

Mandatory Appendices

I Gage and Gaging for Checking Bolt Straightness 9
II Recommended Clearance Holes for Metric Round Head Short Square Neck Bolts 10

Nonmandatory Appendix

A Government Standard Items and Part Numbering System 11

Copyright ASME International
Provided by IHS under license with ASME
No reproduction or networking permitted without license from IHS
Not for Resale

METRIC ROUND HEAD SHORT SQUARE NECK BOLTS

1 INTRODUCTORY NOTES

1.1 Scope

1.1.1 This Standard covers the general and dimensional data for metric series round head short square neck bolts recognized as "American National Standard" and intended primarily for applications in thin metals.

1.1.2 The inclusion of dimensional data in this Standard is not intended to imply that all sizes described are production stock items. Consumers should consult with suppliers concerning lists of stock production items.

1.1.3 Round head short square neck bolts purchased for government use shall conform to this Standard and, additionally, to the requirements of Appendix A.

1.2 Comparison With ISO 8678:1988

1.2.1 Steel bolts produced to this Standard are functionally interchangeable with bolts which conform to ISO 8678:1988, Cup head square neck bolts with small head and short neck — Product grade B. Differences between this Standard and ISO 8678 include: minor variations in tolerances; permissible swell, fin, or die seam on the body of bolts with nominal lengths longer than 150 mm; the inclusion of size M14; and the inclusion of materials other than steel. **Dimensional requirements in addition to, or different from ISO 8678 are shown in bold type in this Standard.**

1.2.2 Letter symbols designating dimensional characteristics are in accordance with ISO 225, Fasteners — Bolts, screws and studs — Symbols and designations of dimensions, and ISO 8678, except where capitals have been used instead of lowercase letters used in the ISO standards.

1.3 Terminology

For definitions of terms relating to fasteners or component features thereof used in this Standard, refer to ANSI B18.12, Glossary of Terms for Mechanical Fasteners.

1.4 Dimensions

1.4.1 All dimensions in this Standard are in millimeters (mm), and apply before any coating, unless stated otherwise.

1.4.2 Symbols specifying geometric characteristics are in accordance with ASME Y14.5M, Dimensioning and Tolerancing.

1.5 Clearance Holes

The recommended sizes of clearance holes in material to be assembled using round head short square neck bolts are the normal series given in Appendix II.

1.6 Designation

1.6.1 Round head short square neck bolts are designated by the following data, preferably in the sequence shown: product name and designation of the standard, nominal diameter and thread pitch, nominal length, steel property class or material identification, and protective coating, if required.

EXAMPLES:
Round head short square neck bolt B18.5.2.1M,
M10 × 1.5 × 50 - 9.8 - zinc plated per ASTM F 871M and ASTM B 633 Fe/Zn 5 type II.

Round head short square neck bolt B18.5.2.1.M,
M6 × 1 × 35, stainless steel class C1-50 ASTM F 738M.

NOTE: It is common practice in ISO standards to omit thread pitch from product size designations when screw threads are metric coarse thread series; e.g., M10 is M10 × 1.5.

1.6.2 The government part numbering system for metric round head short square neck bolts is given in Appendix A. This system may be used by any user needing a definitive part numbering system.

1.7 Referenced Standards

ANSI and ISO standards may be obtained from the American National Standards Institute, 11 West 42nd Street, New York, NY 10036-8002. Alternatively, ANSI, ANSI/ASME, ASME/ANSI or ASME B1, B18, or Y14 series standards may be obtained from the ASME Order

Copyright ASME International
Provided by IHS under license with ASME
No reproduction or networking permitted without license from IHS
Not for Resale

Department, 22 Law Drive, Box 2300, Fairfield, NJ 07007-2300.

ASTM standards may be obtained from ASTM, the American Society for Testing and Materials, 100 Barr Harbor Drive, West Conshohocken, PA 19428-2959.

SAE standards may be obtained from SAE, the Society of Automotive Engineers, Inc., 400 Commonwealth Drive, Warrendale, PA 15096-0001.

2 GENERAL DATA

2.1 Heads

2.1.1 Top of Head. The spherical top surface of the head may be underfilled within a circle equal to the nominal bolt diameter D concentric to the bolt axis providing the head height K is maintained.

2.1.2 Head Height. The head height is the distance, as measured parallel to the axis of the bolt, from the top of the head to the under head bearing surface. See para. 2.11.

2.1.3 Edge of Head. The edge of the head may be flat or rounded, and the periphery may be somewhat irregular, providing the limits for head diameter D_k, bearing surface diameter D_w, and head edge thickness C (measured at the minimum bearing surface diameter, D_w min) are maintained.

2.1.4 Bearing Surface. The bearing surface shall be reasonably flat and perpendicular within one degree to the axis of the bolt. **A 0.5 mm maximum height die seam fin across the bearing surface shall be permissible.**

2.2 Square Neck

2.2.1 Depth of Neck. The depth of the square neck is the distance, measured parallel to the axis, from the bearing surface to the plane where the corner chamfer would intersect the nominal bolt diameter.

2.2.2 Corner Depth. The corner depth is the distance, measured at a corner of the square, from the plane of the bearing surface to the last plane at which the width across corners E is within its specified limits.

2.2.3 Width Across Corners. The corners of the square neck may be rounded or underfilled to the extent allowed by the minimum width across corners E and the minimum corner depth F_1. **There may be a fin or die seam on the corners of the square not to exceed the maximum width across corners.**

2.3 Fillets

The radius of fillets at the junction of head and square neck and at the junction of square neck and shank shall be within the specified limits, **except for bolts produced from nonferrous and corrosion resistance materials, on which maximum fillets shall be subject to agreement between manufacturer and purchaser.**

2.4 Body Diameter

The body diameter for lengths up to 150 mm shall be within limits of Table 1. **For bolts longer than 150 mm, there may be reasonable swell, fin, or die seam not to exceed the nominal bolt diameter by the following:**

0.65 mm for M6
0.75 mm for M8 thru M14
1.25 mm for M16
1.50 mm for M20

2.5 Length

The length of the bolt shall be measured parallel to the axis of the bolt from the underside of head to the extreme end of the shank. Tolerances for bolt lengths are given in Table 4.

2.6 Straightness

Shanks of bolts shall be straight with a maximum camber **at maximum material condition** of 0.05 mm plus 0.0025 times bolt length ($0.05 + 0.002L$) for nominal sizes M8 and smaller, and within 0.05 mm plus 0.0025 times bolt length ($0.05 + 0.0025L$) for nominal sizes M10 and larger. A gage and gaging procedure for checking bolt straightness is given in Appendix I.

2.7 Screw Threads

2.7.1 Thread Series and Tolerance Class. Screw threads shall be coarse series general purpose external metric screw threads with tolerance class 6g conforming to ASME B1.13M, Metric Screw Threads — M Profile, unless otherwise specified by the purchaser. For bolts with additive finish, size limits for tolerance class 6g apply before plating or coating, and the thread profile after coating is subject to acceptance using a basic (tolerance position h) size GO thread gage and

Copyright ASME International
Provided by IHS under license with ASME
No reproduction or networking permitted without license from IHS
Not for Resale

tolerance class 6g thread gage for either minimum material, LO or NOT GO.

2.7.2 Thread Gaging. Unless otherwise specified, dimensional acceptability of screw threads shall be determined based on System 21, ASME B1.3M, Screw Thread Gaging Systems for Dimensional Acceptability — Inch and Metric Screw Threads (UN, UNR, UNJ, M and MJ).

2.8 Thread Length

2.8.1 The length of thread on bolts shall be controlled by the maximum grip length L_g and the minimum body length L_s as set forth in paras. 2.8.2 through 2.8.5.

2.8.2 Grip Length. The grip length L_g is the distance measured parallel to the axis of the bolt from the bearing surface to the face of a standard noncounterbored, noncountersunk GO-thread ring gage assembled by hand as far as the thread will permit.

For standard diameter–length combinations the values for L_g max are specified in Table 2. For diameter–length combinations not listed in Table 2, the maximum grip length shall be determined from Table 3 as follows:

(a) All bolts of nominal lengths equal to or shorter than L_1 specified in Table 3, shall be threaded full length. For bolts which are threaded full length, L_g max shall be as specified in Table 3.

(b) For bolts of nominal lengths longer than L_1, specified in Table 3, the maximum grip length shall be equal to the nominal bolt length L minus the basic thread length B, specified in Table 3 (L_g max = L - B).

2.8.3 Body Length. The body length L_s is the distance, measured parallel to the axis of the bolt, from the bearing surface to the last scratch of thread or top of the extrusion angle, whichever is closer to the head. For standard diameter–length combinations of bolts, the values of L_s min are specified in Table 2. For diameter–length combinations not listed in Table 2, the minimum body length shall be equal to the maximum grip length minus the maximum transition thread length as specified in Table 3 (L_s min = L_g max - X max).

2.8.4 Basic Thread Length. The basic thread length B, specified in Table 3, is a reference dimension, intended for calculation purposes only, and is the distance, measured parallel to the axis of the bolt, from the extreme end of the bolt to the last complete (full form) thread.

2.8.5 Transition Thread Length. The maximum transition thread length X, specified in Table 3, is a reference dimension intended for calculation purposes only. It includes the length of incomplete threads and tolerances on grip length and body length. The transition from full form thread to incomplete thread shall be smooth and uniform. **The major diameter of the incomplete threads shall not exceed the actual major diameter of the complete (full form) threads. For bolts of property class 10.9 and higher strength materials (tensile strength 1040 MPa and higher), the transition threads shall have a rounded root contour no radius of which shall be less the specified minimum root radius of the full form thread.**

2.9 Point

Bolts need not be pointed. The length from the end of the bolt to the first full formed thread at major diameter shall be no greater than two thread pitches, **as determined by the distance the end of the bolt enters into a cylindrical NOT GO major diameter ring gage.**

2.10 Materials and Mechanical Properties

2.10.1 Steel. Unless otherwise specified, steel bolts shall conform to the requirements of ASTM F 568, Specification for Carbon and Alloy Steel Externally Threaded Metric Fasteners, or SAE J1199, Mechanical and Material Requirements for Metric Externally Threaded Steel Fasteners.

2.10.2 Corrosion-Resistant Steel. Unless otherwise specified, corrosion-resistant steel bolts shall conform to the requirements of ASTM F 738M, Specification for Stainless Steel Metric Bolts, Screws, and Studs.

2.10.3 Nonferrous Metal. Unless otherwise specified, nonferrous bolts shall conform to the requirements of ASTM F 468M, Specification for Nonferrous Bolts, Hex Cap Screws, and Studs for General Use (Metric).

2.11 Identification Symbols

Markings shall be located on the top of the head and may be raised or recessed unless otherwise ordered by the purchaser. **When raised, markings shall project not less than 0.1 mm for M14 and smaller bolts, and 0.3 mm for M16 and larger bolts above the surface of the head, and total head height (head plus markings) shall not exceed the specified maximum head height plus 0.1 mm for M6 bolts, 0.2 mm for M8 and M10 bolts, 0.3 mm for M12 and M14 bolts, and 0.4 mm for M16 and larger bolts.**

Copyright ASME International
Provided by IHS under license with ASME
No reproduction or networking permitted without license from IHS
Not for Resale

2.11.1 Property Class Symbols. Each bolt shall be marked in accordance with the requirements of the applicable specification for its chemical and mechanical requirements. **Maximum height of property class symbols shall be 1.5 mm for M6 bolts, 2.3 mm for M8 and M10 bolts, 3.2 mm for M12 and M14 bolts, and 4.0 mm for M16 and larger bolts.**

2.11.2 Source Symbols. Each bolt shall be marked to identify its source (manufacturer or private label distributor).

2.12 Surface Condition

Bolts need not be finished on any surface except the threads.

2.13 Finish

Unless otherwise specified, the finish (surface) of the bolts shall be plain:

(a) natural (as processed), in a clean condition, and lightly oiled for steel bolts;

(b) cleaned or descaled, or both, and bright for bolts made of stainless steel or nonferrous metal.

2.14 Workmanship

Bolts shall be free from surface imperfections such as burrs, seams, laps, loose scale, and other surface irregularities which could affect their serviceability.

When control of surface discontinuities is required, the purchaser shall specify conformance to ASTM F 788/F 788M, Surface Discontinuities of Bolts, Screws, and Studs, Inch and Metric Series.

2.15 Inspection and Quality Assurance

Unless otherwise specified, acceptability of round head short square neck bolts shall be determined according to ASME B18.18.1M, Inspection and Quality Assurance for General Purpose Fasteners.

2.16 Dimensional Conformance

2.16.1 Unless otherwise specified, the following designated dimensional characteristics shall be inspected to the inspection levels shown according to ASME B18.18.2M, Inspection and Quality Assurance for High-Volume Machine Assembly Fasteners, and shall be within their specified limits.

Characteristic	Inspection Level
Thread Acceptability	C
Body Diameter, D_s	B
Square Depth, F	C
Square Width Across Corners, E	C
Grip Length, L_g max	B
Bolt Length, L	C
Visual Inspection[A]	C

[A]Visual inspection shall include property class marking, source marking, fillet, and workmanship.

If verifiable in-process inspection is used according to ASME B18.18.3M or ASME B18.18.4M, the final inspection level sample sizes of those respective standards shall apply.

2.16.2 For non-designated dimensional characteristics, ASME B18.18.1M shall apply. Should a non-designated dimensional characteristic be determined to be at variance, it shall be considered conforming to this Standard if the user who is the installer accepts the variance, based on form, fit, and function considerations.

Copyright ASME International
Provided by IHS under license with ASME
No reproduction or networking permitted without license from IHS
Not for Resale

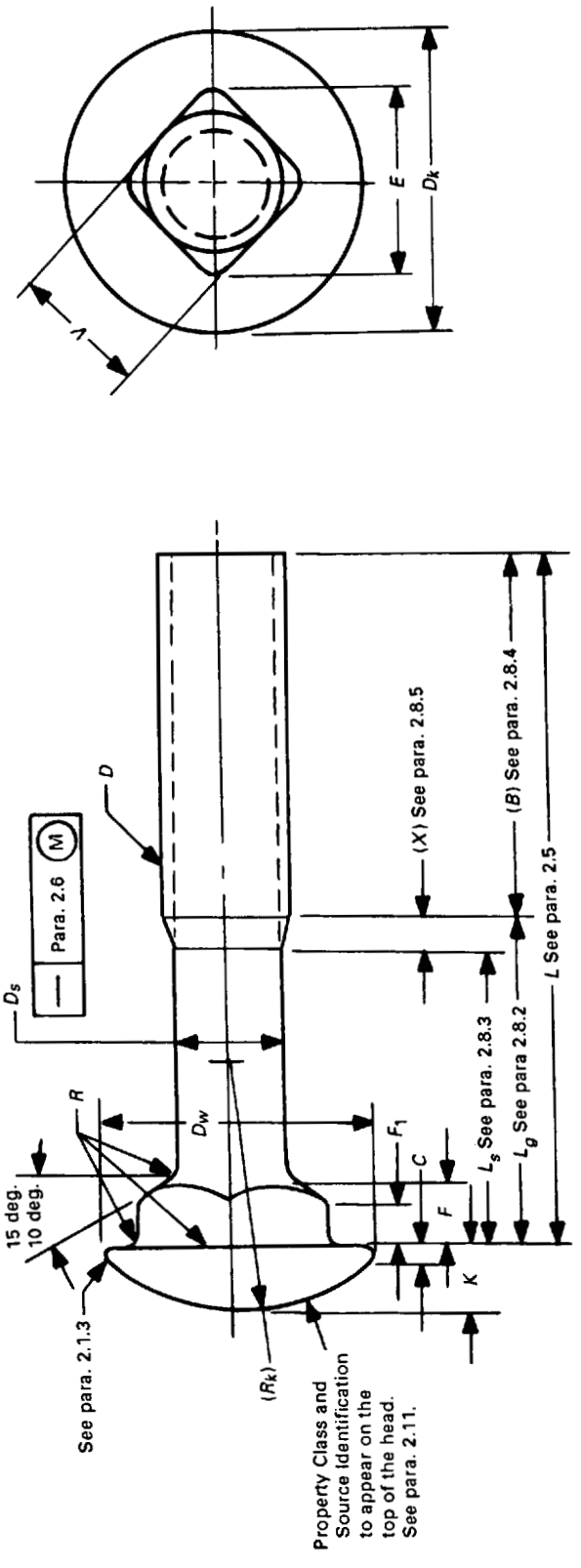

TABLE 1 DIMENSIONS OF ROUND HEAD SHORT SQUARE NECK BOLTS

DXP	*D_s*		*D_k*	*D_w*	*K*		*C*		*E*		*V*		*F*		*F_1*	*(R_k)*	*R*	
Nominal Bolt Size and Thread Pitch	Body Diameter		Head Diameter	Bearing Surface Diameter	Head Height		Head Edge Thickness		Square Width Across Corners		Square Width Across Flats		Square Depth		Square Corner Depth	Head Radius	Fillet Radius	
	max.	min.	max.	min.	max.	min.	max.	min.	max.	min.	max.	min.	max.	min.	min.	ref.	max.	min.
M 6 × 1	6.00	5.21	14.2	12.2	3.6	3.0	1.9	1.1	**9.16**	7.64	6.48	5.88	3.0	2.4	1.9	**10.7**	0.5	**0.25**
M 8 × 1.25	8.00	7.04	18.0	15.8	4.8	4.0	2.2	1.2	**12.13**	10.20	8.58	7.85	3.0	2.4	1.9	**12.5**	0.8	**0.4**
M 10 × 1.5	10.00	8.86	22.3	23.6	5.8	5.0	2.5	1.5	**14.96**	12.80	10.58	9.85	4.0	3.2	2.6	**15.5**	0.8	**0.4**
M 12 × 1.75	12.00	10.68	26.6	27.6	6.8	6.0	2.8	1.8	**17.96**	15.37	12.70	11.82	4.0	3.2	2.6	**19.0**	1.2	**0.6**
M 14 × 2	**14.00**	**12.50**	**30.5**	**27.6**	**7.9**	**7.0**	**3.3**	**2.1**	**20.79**	**17.97**	**14.70**	**13.82**	**4.0**	**3.2**	**2.6**	**21.9**	**1.2**	**0.6**
M 16 × 2	16.00	14.50	35.0	31.9	8.9	8.0	3.6	2.4	**23.62**	20.57	16.70	15.82	5.0	4.2	3.4	**25.5**	**1.2**	**0.6**
M 20 × 2.5	20.00	18.16	43.0	39.9	10.9	10.0	4.2	3.0	**29.47**	25.73	20.84	19.79	5.0	4.2	3.4	**31.9**	**1.6**	**0.8**
See Para.	2.4		2.1.3	2.1.3, 2.1.4	2.1.2, 2.11		2.13		2.2.2, 2.2.3				2.2.1		2.2.2, 2.2.3	2.1.1	2.3	

Copyright ASME International
Provided by IHS under license with ASME
No reproduction or networking permitted without license from IHS

Not for Resale

TABLE 2 MAXIMUM GRIP LENGTHS L_g AND MINIMUM BODY LENGTHS L_s

Nominal Diameter and Thread Pitch	M 6 x 1		M 8 x 1.25		M 10 x 1.5		M 12 x 1.75		M 14 x 2		M 16 x 2		M 20 x 2.5	
L Nominal Length	L_g, max.	L_s, min.	L_g, max.	L_s, min.	L_g, max.	L_s, min.	L_g, max.	L_s, min.	L_g, max.	L_s, min.	L_g, max.	L_s, min.	L_g, max.	L_s, min.
12	5.0													
16	5.0		5.5											
20	5.0		5.5		7.0		7.5							
25	5.0		5.5		7.0		7.5		8.0					
30	5.0		5.5		7.0		7.5		8.0		9.0			
35	5.0		5.5		7.0		7.5		8.0		9.0		10.0	
40	5.0		5.5		7.0		7.5		8.0		9.0		10.0	
45	5.0		5.5		7.0		7.5		8.0		9.0		10.0	
50	5.0		5.5		7.0		7.5		8.0		9.0		10.0	
55	37.0	32.0	33.0	26.75	29.0	21.5	25.0	16.25	8.0		9.0		10.0	
60	42.0	37.0	38.0	31.75	34.0	26.5	30.0	21.25	26.0	16.0	9.0		10.0	
65			43.0	36.75	39.0	31.5	35.0	26.25	31.0	21.0	27.0	17.0	10.0	
70			48.0	41.75	44.0	36.5	40.0	31.25	36.0	26.0	32.0	22.0	10.0	
80			58.0	51.75	54.0	46.5	50.0	41.25	46.0	36.0	42.0	32.0	34.0	21.5
90					64.0	56.5	60.0	51.25	56.0	46.0	52.0	42.0	44.0	31.5
100					74.0	66.5	70.0	61.25	66.0	56.0	62.0	52.0	54.0	41.5
110							80.0	71.25	76.0	66.0	72.0	62.0	64.0	51.5
120							90.0	81.25	86.0	76.0	82.0	72.0	74.0	61.5
130									90.0	80.0	86.0	76.0	78.0	65.5
140									100.0	90.0	96.0	86.0	88.0	75.5
150											106.0	96.0	98.0	85.5
160											116.0	106.0	108.0	95.5
180													128.0	115.5
200													148.0	135.5

GENERAL NOTES:
(a) L_g is grip length; L_s is body length. See paras. 2.8.2 and 2.8.3.
(b) Diameter–length combinations for which grip lengths L_g are shown are recommended. Standard lengths over 200 mm are in increments of 20 mm.
(c) Bolts with diameter–length combinations shown above the thick stepped line are threaded full length.
(d) For bolts with lengths not shown, see para. 2.8.2.

Copyright ASME International
Provided by IHS under license with ASME
No reproduction or networking permitted without license from IHS
Not for Resale

TABLE 3 THREAD LENGTHS

Nominal Bolt Diameter and Thread Pitch	(B) Basic Thread Length (ref) Bolt Lengths L $> L_1$ ≤ 125	(B) Basic Thread Length (ref) Bolt Lengths L > 125 ≤ 200	(B) Basic Thread Length (ref) Bolt Lengths L > 200	(X) Transition Thread Length max.	Bolts Threaded Full Length L_1 Bolt Lengths To and Including	Bolts Threaded Full Length L_g Grip Length max.
M 6 × 1	18	24	37	5.0	50	5.0
M 8 × 1.25	22	28	41	6.25	50	5.5
M 10 × 1.5	26	32	45	7.5	50	7.0
M 12 × 1.75	30	36	49	8.75	50	7.5
M 14 × 2	34	40	53	10.0	55	8.0
M 16 × 2	38	44	57	10.0	60	9.0
M 20 × 2.5	46	52	65	12.5	70	10.0

TABLE 4 LENGTH TOLERANCES

Nominal Length	Length Tolerance
Over 10 thru 18 mm	± 0.90
Over 18 thru 30 mm	± 1.05
Over 30 thru 50 mm	± 1.25
Over 50 thru 80 mm	± 1.50
Over 80 thru 120 mm	± 1.75
Over 120 thru 180 mm	± 2.00
Over 180 thru 250 mm	± 2.30
Over 250 thru 300 mm	± 2.60

Copyright ASME International
Provided by IHS under license with ASME
No reproduction or networking permitted without license from IHS Not for Resale

APPENDIX I
GAGE AND GAGING FOR CHECKING BOLT STRAIGHTNESS

(This Appendix is a part of ASME B18.5.2.1M-1996 and is placed after the main text for convenience.)

The conformance of bolts to shank straightness or camber limitations set forth in the bolt specifications may be checked by use of the typical gage illustrated below in accordance with the following procedure:

The allowable camber shall be calculated by applying the applicable formula to the length to be inspected, and shall be expressed as a two-place decimal. The camber thus derived shall be added to the specified maximum body diameter and the moveable rail of the gage shall be adjusted to provide a parallel space between the rails equal to this distance by obtaining common readings on both micrometer heads. The moveable rail shall then be locked in place by tightening the securing screws.

The bolt shall then be inserted between rails, excluding from the gage any permissible length of swell or fin under the head or neck. The bolt shall next be rotated by hand through a full 360 deg. Any interference occurring between the bolt and the gage which is sufficient to prevent rotation shall indicate excessive camber.

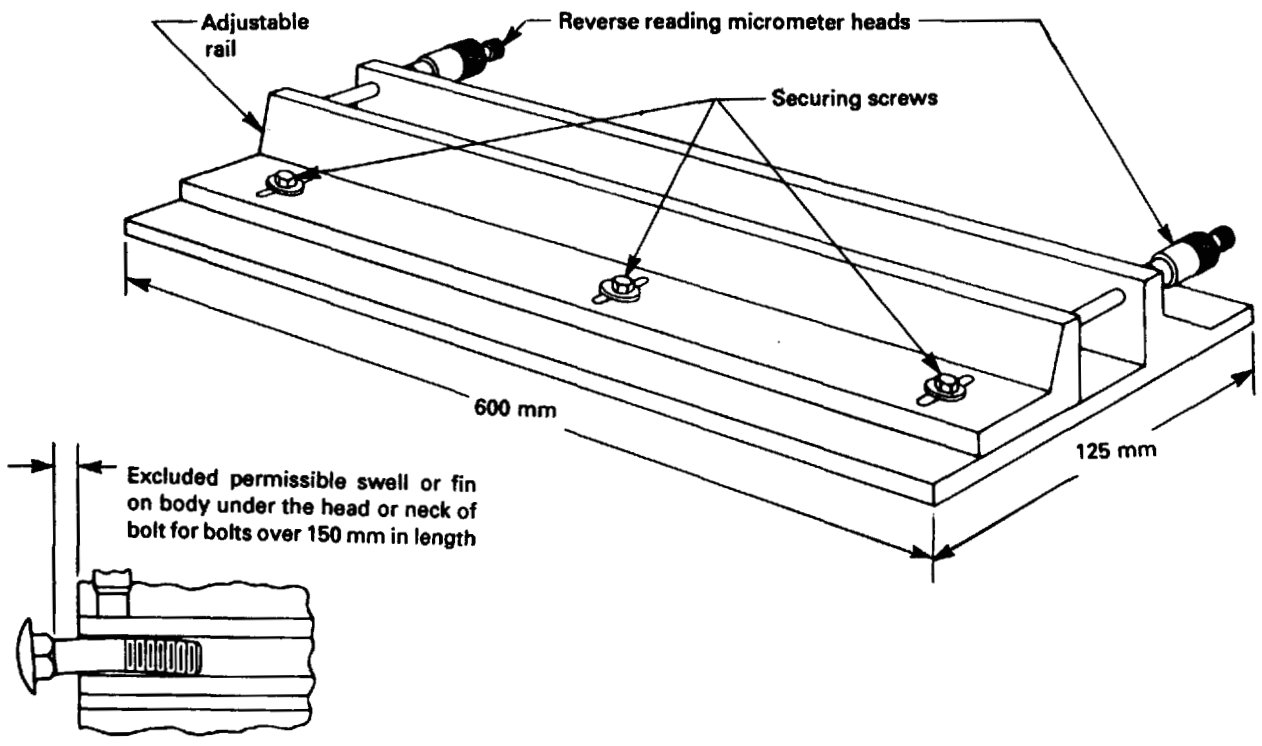

Copyright ASME International
Provided by IHS under license with ASME
No reproduction or networking permitted without license from IHS
Not for Resale

APPENDIX II
RECOMMENDED CLEARANCE HOLES FOR METRIC ROUND HEAD SHORT SQUARE NECK BOLTS

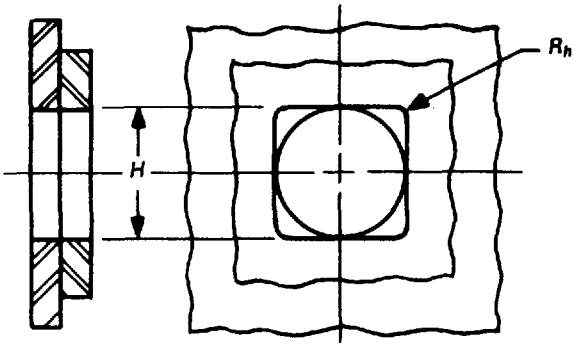

TABLE II.1 CLEARANCE HOLE SIZES

Nominal Bolt Diameter and Thread Pitch	H Clearance Hole Diameter or Width (Square) min. Close Clearance	H Clearance Hole Diameter or Width (Square) min. Normal Clearance (Preferred)	H Clearance Hole Diameter or Width (Square) min. Loose Clearance	R_h Corner Radius max.
M 6 × 1	...	6.6	7.0	0.3
M 8 × 1.25	...	9.0	10.0	0.4
M 10 × 1.5	...	11.0	12.0	0.4
M 12 × 1.75	13.0	13.5	14.5	0.6
M 14 × 2	15.0	15.5	16.5	0.6
M 16 × 2	17.0	17.5	18.5	0.6
M 20 × 2.5	21.0	22.0	24.0	0.8

GENERAL NOTES:

Close Clearance: Close clearance hole sizes should be specified only for square holes in very thin and/or soft material, for slots, or where conditions such as critical alignment of assembled parts, wall thickness, or other limitations necessitate use of a minimal hole.

Normal Clearance: Normal clearance hole sizes are preferred for general purpose applications, and should be specified unless special design considerations dictate the need for either a close or loose clearance hole.

Loose Clearance: Loose clearance hole sizes should be specified only for applications where maximum adjustment capability between components being assembled are necessary. Loose clearance square holes or slots may not prevent bolt turning during wrenching.

Copyright ASME International
Provided by IHS under license with ASME
No reproduction or networking permitted without license from IHS
Not for Resale

APPENDIX A
GOVERNMENT STANDARD ITEMS AND PART NUMBERING SYSTEM

(This Appendix is not part of ASME B18.5.2.1M-1996, and is provided here for information purposes only.)

NOTE: The government encourages the general use of this Appendix to achieve maximum parts standardization.

This Appendix, together with ASME B18.5.2.1M, establishes the standard for items for government application, selected from the possible variations of items within the scope of the standard, and provides a part numbering system for identification and application in engineering documents.

For non-government applications the user is not restricted to the options provided by the government part numbering system.

Variations. The following variations are standard:

(a) Diameter/Thread Pitch and Length Combinations as specified in Table A.1.

(b) Material — Steel, Property Class 10.9;

(c) Finish — Cadmium plating or zinc plating as coded in part numbering system;

(d) Special Features — drilled shank as specified.

The part number shall consist of the following element codes in the order shown:

(1) Document Identifier — ASME standard number less decimal points;

(2) Material and Finish;

(3) Nominal Diameter;

(4) Nominal Length;

(5) Special Features.

Packaging. Packaging shall be in accordance with ASTM D 3951 and cite the country of origin.

Copyright ASME International
Provided by IHS under license with ASME
No reproduction or networking permitted without license from IHS
Not for Resale

Copyright ASME International
Provided by IHS under license with ASME
No reproduction or networking permitted without license from IHS

PART NUMBERING SYSTEM COVERING STANDARD ITEMS FOR GOVERNMENT USE

NOTE: THE GOVERNMENT ENCOURAGES THE GENERAL USE OF THIS SYSTEM TO ACHIEVE MAXIMUM PARTS STANDARDIZATION.

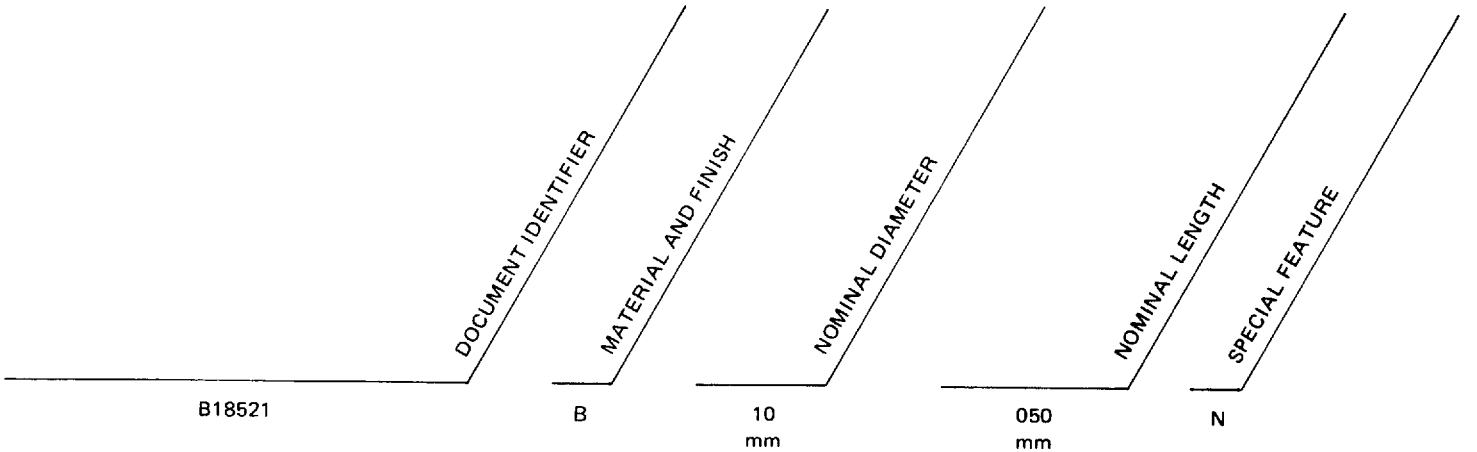

MATERIAL AND FINISH CODE

A — Steel w/cadmium plating per QQ-P-416, Type II, Class 3 (5.1μm Plating Thickness), Property Class 10.9

B — Steel w/zinc plating per ASTM B633, Fe/Zn 5 (5 μm Plating Thickness) Type II, Property Class 10.9

SPECIAL FEATURE CODE

N — None

D — Drilled Shank

EXAMPLE: B18521B10050N indicates a Bolt, Round Head, Short Square Neck — Metric made of zinc plated steel, property class 10.9, with M 10 x 1.5 thread, 50 mm in length, with no special features.

NOTE: For above codes A and B, zinc plated product is preferred unless cadmium plated product is deemed absolutely essential.

Not for Resale

TABLE A.1 GOVERNMENT STANDARD ITEMS AND PART NUMBERING SYSTEM

Nominal Length	Nominal Diameter and Thread Pitch						
	M 6 x 1	M 8 x 1.25	M 10 x 1.5	M 12 x 1.75	M 14 x 2	M 16 x 2	M 20 x 2.5
12	06012						
16		08016					
20			10020	12020			
25					14025		
30						16030	
35							20035
40							
45							
50							
55							
60			STANDARD				
65	06060						
70				DIAMETER			
80							
90		08080		AND			
100							
110			10100		LENGTH		
120							
130				12120		COMBINATIONS	
140							
150					14140		
160							
180						16160	
200							20200

Copyright ASME International
Provided by IHS under license with ASME
No reproduction or networking permitted without license from IHS
Not for Resale

AMERICAN NATIONAL STANDARDS FOR BOLTS, NUTS, RIVETS, SCREWS, WASHERS, AND SIMILAR FASTENERS

Small Solid Rivets ..... B18.1.1-1972(R1995)
Large Rivets ..... B18.1.2-1972(R1995)
Metric Small Solid Rivets ..... B18.1.3M-1983(R1995)
Square and Hex Bolts and Screws (Inch Series) B18.2.1-1996
Square and Hex Nuts (Inch Series) ..... B18.2.2-1987(R1993)
Metric Hex Cap Screws ..... B18.2.3.1M-1979(R1995)
Metric Formed Hex Screws ..... B18.2.3.2M-1979(R1995)
Metric Heavy Hex Screws ..... B18.2.3.3M-1979(R1995)
Metric Hex Flange Screws ..... B18.2.3.4M-1984(R1995)
Metric Hex Bolts ..... B18.2.3.5M-1979(R1995)
Metric Heavy Hex Bolts ..... B18.2.3.6M-1979(R1995)
Metric Heavy Hex Structural Bolts ..... B18.2.3.7M-1979(R1995)
Metric Hex Lag Screws ..... B18.2.3.8M-1981(R1991)
Metric Heavy Hex Flange Screws ..... B18.2.3.9M-1984(R1995)
Square Head Bolts (Metric Series) B18.2.3.10M-1996
Metric Hex Nuts, Style 1 ..... B18.2.4.1M-1996
Metric Hex Nuts, Style 2 ..... B18.2.4.2M-1979(R1995)
Metric Slotted Hex Nuts ..... B18.2.4.3M-1979(R1995)
Metric Hex Flange Nuts ..... B18.4.4.4M-1982(R1993)
Metric Hex Jam Nuts ..... B18.2.4.5M-1979(R1990)
Metric Heavy Hex Nuts ..... B18.2.4.6M-1979(R1990)
Fasteners for Use in Structural Applications B18.2.6-1996
Socket Cap, Shoulder and Set Screws — Inch Series ..... B18.3-1986(R1995)
Socket Head Cap Screws (Metric Series) ..... B18.3.1M-1986(R1993)
Metric Series Hexagon Keys and Bits ..... B18.3.2M-1979(R1990)
Hexagon Socket Head Shoulder Screws (Metric Series) ..... B18.3.3M-1986(R1993)
Hexagon Socket Button Head Cap Screws (Metric Series) ..... B18.3.4M-1986(R1993)
Hexagon Socket Flat Countersunk Head Cap Screws (Metric Series) ..... B18.3.5M-1986(R1993)
Metric Series Socket Set Screws ..... B18.3.6M-1986(R1993)
Round Head Bolts (Inch Series) B18.5-1990
Metric Round Head Short Square Neck Bolts B18.5.2.1M-1996
Metric Round Head Square Neck Bolts B18.5.2.2M-1982
Round Head Square Neck Bolts With Large Head (Metric Series) B18.5.2.3M-1990
Wood Screws (Inch Series) ..... B18.6.1-1981(R1991)
Slotted Head Cap Screws, Square Head Set Screws, and Slotted Headless Set Screws ..... B18.6.2-1972(R1993)
Machine Screws and Machine Screw Nuts ..... B18.6.3-1972(R1983)
Thread Forming and Thread Cutting Tapping Screws and Metallic Drive Screws (Inch Series) ..... B18.6.4-1981(R1991)
Metric Thread Forming and Thread Cutting Tapping Screws ..... B18.6.5M-1986(R1993)
Metric Machine Screws ..... B18.6.7M-1985(R1993)
General Purpose Semi-Tubular Rivets, Full Tubular Rivets, Split Rivets and Rivet Caps ..... B18.7-1972(R1992)
Metric General Purpose Semi-Tubular Rivets ..... B18.7.1M-1984(R1992)
Clevis Pins and Cotter Pins (Inch Series) B18.8.1-1994
Taper Pins, Dowel Pins, Straight Pins, Grooved Pins, and Spring Pins (Inch Series) B18.8.2-1995
Spring Pins — Coiled Type (Metric Series) B18.8.3M-1995
Spring Pins — Slotted (Metric Series) B18.8.4M-1994
Machine Dowel Pins — Hardened Ground (Metric Series) B18.8.5M-1994
Cotter Pins (Metric Series) B18.8.6M-1995
Headless Clevis Pins (Metric Series) B18.8.7M-1994
Headed Clevis Pins (Metric Series) B18.8.8M-1994
Plow Bolts (Inch Series) B18.9-1996
Track Bolts and Nuts ..... B18.10-1982(R1992)
Miniature Screws ..... B18.11-1961(R1992)
Glossary of Terms for Mechanical Fasteners ..... B18.12-1962(R1991)
Screw and Washer Assemblies — Sems (Inch Series) B18.13-1996
Screw and Washer Assemblies — Sems (Metric Series) B18.13.1M-1991
Forged Eyebolts ..... B18.15-1985(R1995)
Mechanical and Performance Requirements for Prevailing-Torque Type Steel Metric Hex Nuts and Hex Flange Nuts ..... B18.16.1M-1979(R1995)
Torque-Tension Test Requirements for Prevailing-Torque Type Steel Metric Hex Nuts and Hex Flange Nuts ..... B18.16.2M-1979(R1995)

Copyright ASME International
Provided by IHS under license with ASME
No reproduction or networking permitted without license from IHS
Not for Resale

Dimensional Requirements for Prevailing-Torque Type Steel Metric Hex Nuts and Hex Flange Nuts ..... B18.16.3M-1982(R1993)
Wing Nuts, Thumb Screws, and Wing Screws ..... B18.17-1968(R1983)
Inspection and Quality Assurance for General Purpose Fasteners ..... B18.18.1M-1987(R1993)
Inspection and Quality Assurance for High-Volume Machine Assembly Fasteners ..... B18.18.2M-1987(R1993)
Inspection and Quality Assurance for Special Purpose Fasteners ..... B18.18.3M-1987(R1993)
Inspection and Quality Assurance for Fasteners for Highly Specialized Engineered Applications ..... B18.18.4M-1987(R1993)
Lock Washers (Inch Series) B18.21.1-1994
Lock Washers (Metric Series) B18.21.2M-1994
Metric Plain Washers ..... B18.22M-1981(R1990)
Plain Washers ..... B18.22.1-1965(R1990)
Part Identifying Number (Pin) Code System Standard for B18 Externally Threaded Products B18.24.1-1996
Square and Rectangular Keys and Keyways B18.25.1M-1996
Woodruff Keys and Keyways B18.25.2M-1996
Helical Coil Screw Thread Inserts (Inch Series) B18.29.1-1993

The ASME Publications Catalog shows a complete list of all the Standards published by the Society. For a complimentary catalog, or the latest information about our publications, call 1-800-THE-ASME (1-800-843-2763).

Copyright ASME International
Provided by IHS under license with ASME
No reproduction or networking permitted without license from IHS
Not for Resale