STD.ASME B18.25.3M-ENGL 1998 ■ 0759670 0608338 47T ■

ASME B18.25.3M-1998

SQUARE AND RECTANGULAR KEYS AND KEYWAYS: WIDTH TOLERANCES AND DEVIATIONS GREATER THAN BASIC SIZE

AN AMERICAN NATIONAL STANDARD



The American Society of Mechanical Engineers

Copyright ASME International
Provided by IHS under license with ASME
No reproduction or networking permitted without license from IHS

Not for Resale

STD.ASME B18.25.3M-ENGL 1998 ■ 0759670 0608339 306 ■



The American Society of Mechanical Engineers

AN AMERICAN NATIONAL STANDARD

SQUARE AND RECTANGULAR KEYS AND KEYWAYS: WIDTH TOLERANCES AND DEVIATIONS GREATER THAN BASIC SIZE

ASME B18.25.3M-1998

Copyright ASME International
Provided by IHS under license with ASME
No reproduction or networking permitted without license from IHS

Not for Resale

Date of Issuance: January 29, 1999

This Standard will be revised when the Society approves the issuance of a new edition. There will be no addenda or written interpretations of the requirements of this Standard issued to this edition.

ASME is the registered trademark of The American Society of Mechanical Engineers.

This code or standard was developed under procedures accredited as meeting the criteria for American National Standards. The Standards committee that approved the code or standard was balanced to assure that individuals from competent and concerned interests have had an opportunity to participate. The proposed code or standard was made available for public review and comment which provides an opportunity for additional public input from industry, academia, regulatory agencies, and the public-at-large.

ASME does not "approve," "rate," or "endorse" any item, construction, proprietary device, or activity.

ASME does not take any position with respect to the validity of any patent rights asserted in connection with any items mentioned in this document, and does not undertake to insure anyone utilizing a standard against liability for infringement of any applicable Letters Patent, nor assume any such liability. Users of a code or standard are expressly advised that determination of the validity of any such patent rights, and the risk of infringement of such rights, is entirely their own responsibility.

Participation by federal agency representative(s) or person(s) affiliated with industry is not to be interpreted as government or industry endorsement of this code or standard.

ASME accepts responsibility for only those interpretations issued in accordance with governing ASME procedures and policies which preclude the issuance of interpretations by individual volunteers.

No part of this document may be reproduced in any form,
in an electronic retrieval system or otherwise,
without the prior written permission of the publisher.

The American Society of Mechanical Engineers
Three Park Avenue New York, NY 10016-5990

Copyright © 1999 by
THE AMERICAN SOCIETY OF MECHANICAL ENGINEERS
All Rights Reserved
Printed in U.S.A.

Copyright ASME International
Provided by IHS under license with ASME
No reproduction or networking permitted without license from IHS

Not for Resale

FOREWORD

(This Foreword is not part of ASME B18.25.3M-1998)

The ASME Subcommittee B18.25 was created in 1994. This subcommittee then assumed the responsibilities of ANSI Standards Committee B17.

The first endeavor of this subcommittee was to create U.S. standards for metric square and rectangular and Woodruff keys and keyways. ASME B18.25.1M covers square and rectangular keys and keyways based on the ISO standard with modifications to reflect U.S. manufacturing and user needs. ASME B18.25.2M covers Woodruff keys and keyways based on the ISO standard with modifications to reflect U.S. manufacturing and user needs. This Standard covers what would be referred to as a "commercial" grade of square and rectangular keys and keyways. There is no ISO standard for the keys and keyways covered by this Standard. The following document was balloted on March 6, 1998.

Following approval by ASME, the document was submitted to the American National Standards Institute. This Standard was approved by ANSI on June 17, 1998.

Copyright ASME International
Provided by IHS under license with ASME
No reproduction or networking permitted without license from IHS
Not for Resale

ASME STANDARDS COMMITTEE B18
Standardization of Bolts, Nuts, Rivets, Screws, Washers, and Similar Fasteners

(The following is the roster of the Committee at the time of approval of this Standard.)

OFFICERS

D. A. Clever, *Chair*
R. D. Strong, *Vice Chair*
S. W. Vass, *Vice Chair*
R. W. McGinnis, *Secretary*

COMMITTEE PERSONNEL

J. C. Akins, Safety Socket Screw Corp.
J. Altman, Rotor Clip Co.
J. B. Belford, Lawson Products, Inc.
J. A. Buda, SPS Technologies
D. A. Clever, Deere & Co.
A. P. Cookman, Ford Motor Co.
T. Collier, Cam-Tech Industries, Inc.
A. C. DiCola, Wrought Washer Manufacturer, Inc.
A. Dinh, Defense Industrial Supply Center
W. D. Downing, Black and Decker
B. A. Dusina, Federal Screw Works
D. S. George, Ford Motor Co.
B. Hasiuk, Defense Industrial Supply Center
A. C. Hood, ACH Technologies
J. Hubbard, Rockford Fastener, Inc.
F. W. Kern, Society of Automotive Engineers
W. H. Kopke, ITW Shakeproof Industrial Products
J. G. Langenstein, Consultant
M. Levinson, ITW Shakeproof Industrial Products
L. L. Lord, Caterpillar, Inc.
A. D. McCrindle, Genfast Manufacturing Co.
K. E. McCullough, Consultant
R. F. Novotny, Textron
M. D. Prasad, General Motors Corp.
J. H. Slass, Rotor Clip
W. Schevey, BGM Fastener Co.
J. F. Sullivan, National Fasteners Distribution Assoc.
R. L. Tennis, Caterpillar, Inc.
R. G. Weber, BEI School of Engineering
C. J. Wilson, Industrial Fasteners Institute

Copyright ASME International
Provided by IHS under license with ASME
No reproduction or networking permitted without license from IHS
Not for Resale

SUBCOMMITTEE 25 — KEYS AND KEYWAYS

J. G. Langenstein, *Chair,* Caterpillar, Inc.
D. A. Clever, Deere & Co.
A. Herskovitz, U. S. Army ARDEC
W. H. Kopke, ITW Shakeproof Industrial Products
K. E. McCullough, Consultant
R. S. Merrick, Jr., Standard Horse Nail Corp.
J. F. Sullivan, National Fasteners Distribution Assoc.
D. J. Trinko, ITW Medalist Leitzke
C. J. Wilson, Industrial Fasteners Institution

Copyright ASME International
Provided by IHS under license with ASME
No reproduction or networking permitted without license from IHS
Not for Resale

CORRESPONDENCE WITH B18 COMMITTEE

General. ASME Standards are developed and maintained with the intent to represent the consensus of concerned interests. As such, users of this Standard may interact with the Committee by requesting interpretations, proposing revisions, and attending Committee meetings. Correspondence should be addressed to:

Secretary, B18 Main Committee
The American Society of Mechanical Engineers
Three Park Avenue
New York, NY 10016-5990

Proposing Revisions. Revisions are made periodically to the Standard to incorporate changes that appear necessary or desirable, as demonstrated by the experience gained from the application of the Standard. Approved revisions will be published periodically.

The Committee welcomes proposals for revisions to this Standard. Such proposals should be as specific as possible, citing the paragraph number(s), the proposed wording, and a detailed description of the reasons for the proposal, including any pertinent documentation.

Interpretations. Upon request, the B18 Committee will render an interpretation of any requirement of the Standard. Interpretations can only be rendered in response to a written request sent to the Secretary of the B18 Main Committee.

The request for interpretation should be clear and unambiguous. It is further recommended that the inquirer submit his/her request in the following format:

Subject:	Cite the applicable paragraph number(s) and the topic of the inquiry.
Edition:	Cite the applicable edition of the Standard for which the interpretation is being requested.
Question:	Phrase the question as a request for an interpretation of a specific requirement suitable for general understanding and use, not as a request for an approval of a proprietary design or situation. The inquirer may also include any plans or drawings, which are necessary to explain the question; however, they should not contain proprietary names or information.

Requests that are not in this format may be rewritten in the appropriate format by the Committee prior to being answered, which may inadvertently change the intent of the original request.

ASME procedures provide for reconsideration of any interpretation when or if additional information that might affect an interpretation is available. Further, persons aggrieved by an interpretation may appeal to the cognizant ASME Committee or Subcommittee. ASME does not "approve," "certify," "rate," or "endorse" any item, construction, proprietary device, or activity.

Attending Committee Meetings. The B18 Main Committee regularly holds meetings, which are open to the public. Persons wishing to attend any meeting should contact the Secretary of the B18 Main Committee.

Copyright ASME International
Provided by IHS under license with ASME
No reproduction or networking permitted without license from IHS
Not for Resale

CONTENTS

Foreword iii
Standards Committee Roster v
Correspondence with B18 Committee vii

1 Introductory Notes 1
1.1 Scope 1
1.2 Comparison With ISO R773-1969 and 2491-1974 1
1.3 Dimensions 1
1.4 Tolerances 1
1.5 Terminology 1
1.6 Referenced Standards 1
1.7 Designation 1
1.8 Preferred Lengths and Tolerances 2

2 Requirements 2
2.1 Material 2
2.2 Dimensions and Tolerances 2

Tables
1 Dimensions for Square and Rectangular Parallel Keys 3
2 Dimensions and Tolerances for Keyways 5

Copyright ASME International
Provided by IHS under license with ASME
No reproduction or networking permitted without license from IHS
Not for Resale

SQUARE AND RECTANGULAR KEYS AND KEYWAYS: WIDTH TOLERANCES AND DEVIATIONS GREATER THAN BASIC SIZE

INTRODUCTORY NOTES

1.1 Scope

1.1.1 This Standard covers requirements for square and rectangular parallel keys and keyways intended for both alignment of shafts and hubs, and transmitting torque between shafts and hubs.

1.1.2 Keys covered by this Standard have a relatively loose width tolerance. All width tolerances are positive. Keys with minus width tolerances and a smaller tolerance range are covered by ASME B18.25.1M.

1.1.3 The inclusion of dimensional data in this Standard is not intended to imply that all sizes described are production stock items. Consumers should consult with suppliers concerning lists of stock items.

1.2 Comparison With ISO R773-1969 and 2491-1974

This Standard has greater tolerances than ISO Standards R773-1969 and 2491-1974. Product manufactured to this Standard is not interchangeable dimensionally with product manufactured to the ISO standards nor is product manufactured to the ISO standards dimensionally interchangeable with product manufactured to this Standard. ISO standards do not include hardened keys.

1.3 Dimensions

Unless otherwise specified, all dimensions in this Standard are in millimeters.

1.4 Tolerances

Many of the tolerances shown in Tables 1 and 2 are from ANSI B4.2 (ISO 286-1 and ISO 286-2). As a result, in addition to plus-minus tolerances which are common in the U.S., some are expressed as plus-plus deviations from the basic size. For further interpretation of these tolerances, refer to ANSI B4.2 or ISO 286.

1.5 Terminology

For definitions of terms related to fasteners or component fasteners used in this Standard, refer to ANSI B18.12.

1.6 Referenced Standards

ANSI B18.12, Glossary of Terms for Mechanical Fasteners

ASME B18.25.1M, Square and Rectangular Keys and Keyways

ISO Standard R773-69, Rectangular or Square Parallel Keys and Their Corresponding Keyways

ISO Standard 2491-1974, Thin Parallel Keys and Their Corresponding Keyways (Dimensions in millimeters)

ISO Standard 286-1-1988, ISO System of Limits and Fits — Bases of Tolerances, Deviations and Fits

ISO Standard 286-2-1988, ISO System of Limits and Fits — Tables of Standard Tolerance Grades and Limit Deviations for Holes and Shafts

Referenced ASME standards may be obtained from the American Society of Mechanical Engineers, 22 Law Drive, Box 2300, Fairfield, New Jersey 07007-2300

Referenced ANSI and ISO standards may be obtained from the American National Standards Institute, 11 West 42nd Street, New York, NY

1.7 Designation

Keys conforming to this Standard shall be designed by the following data, preferably in the sequence shown:

(a) ASME document number,

(b) product name,

(c) nominal size (width (b) x height (h) x length),

(d) style,

(e) hardness (if other than non-hardened) or optionally by ASME B18.24.1, Part Identification Number (PIN) Code System Standard for B18 Externally Threaded Products.

EXAMPLES:

(1) K253NAB003020302NNAA1

(2) K253NBF010040302NNAA1

Copyright ASME International
Provided by IHS under license with ASME
No reproduction or networking permitted without license from IHS
Not for Resale

STD.ASME B18.25.3M-ENGL 1998 ■ 0759670 0608347 482 ■

1.8 Preferred Lengths and Tolerances

Preferred lengths and tolerances of square and rectangular keys are shown below. Tolerances are JS16 from ANSI B4.2. To minimize problems due to lack of straightness, key length should be less than 10 times the key width.

Length	±Tolerances
6	0.375
8, 10	0.45
12, 14, 16, 18	0.55
20, 22, 25, 28	0.65
32, 36, 45, 50	0.80
56, 63, 70, 80	0.95
90, 100, 110	1.1
125, 140, 160, 180	1.25
200, 220, 250	1.45
280	1.6
320, 360, 400	1.8

2 REQUIREMENTS

2.1 Material

Standard steel keys shall have a hardness of 183 HV minimum. Hardened keys shall be alloy steel through hardened to a Vickers hardness of 390 to 510 HV. When other materials and properties are required, these shall be as agreed upon by the supplier and customer.

2.2 Dimensions and Tolerances

Dimensions and tolerances for square and rectangular keys are shown in Table 1. Recommended dimensions and tolerances for keyways are shown in Table 2.

Copyright ASME International
Provided by IHS under license with ASME
No reproduction or networking permitted without license from IHS
Not for Resale

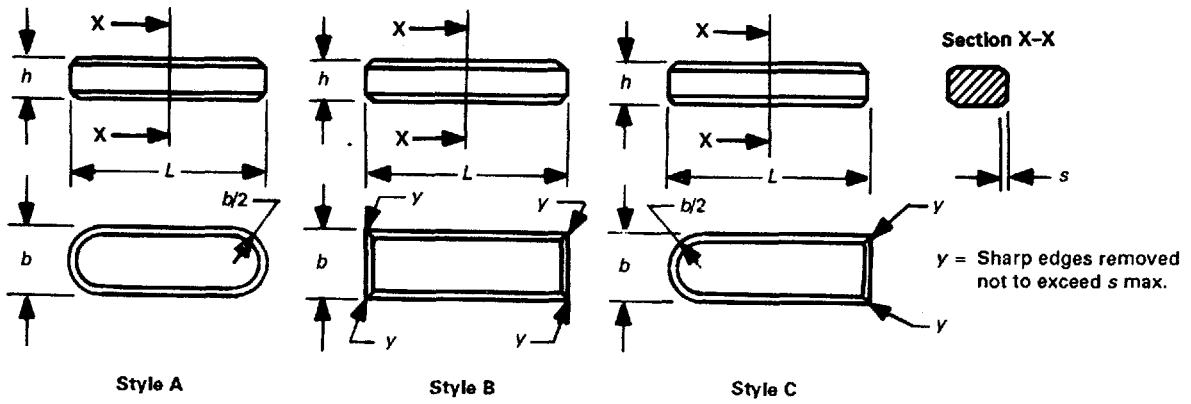

TABLE 1 DIMENSIONS FOR SQUARE AND RECTANGULAR PARALLEL KEYS

Width, *b*		Thickness, *h*		Chamfer or Radius, *s*		Range of Lengths	
Basic Size	Tolerance	Basic Size	Tolerance	Min.	Max.	From	To
Square Keys							
2	+0.040 -0.000	2	+0.040 -0.000	0.16	0.25	6	20
3		3				6	36 [Note (1)]
4	+0.045 -0.000	4				8	45 [Note (1)]
5		5	+0.045 -0.000	0.25	0.40	10	56 [Note (1)]
6		6				14	70 [Note (1)]
Rectangular Keys							
5	+0.045 -0.000	3	+0.160 -0.000	0.25	0.40	10	56 [Note (1)]
6		4	+0.175 -0.000			14	70 [Note (1)]
8	+0.050 -0.000	5				18	90 [Note (1)]
8		7	+0.190 -0.000				
10		6	+0.175 -0.000	0.40	0.60	22	110 [Note (1)]
10		8	+0.190 -0.000				

(Table 1 continues on next page)

Copyright ASME International
Provided by IHS under license with ASME
No reproduction or networking permitted without license from IHS
Not for Resale

TABLE 1 DIMENSIONS FOR SQUARE AND RECTANGULAR PARALLEL KEYS (CONT'D)

Width, *b*		Thickness, *h*		Chamfer or Radius, *s*		Range of Lengths	
Basic Size	Tolerance	Basic Size	Tolerance	Min.	Max.	From	To
Rectangular Keys							
12	+0.075 -0.000	6	+0.175 -0.000	0.40	0.60	28	140 [Note (1)]
12		8	+0.190 -0.000				
14		6	+0.175 -0.000			36	160 [Note (1)]
14		9	+0.190 -0.000			45	180 [Note (1)]
16		7					
16		10					
18		7				50	200 [Note (1)]
18		11	+0.210 -0.000				
20	+0.050 -0.033	8	+0.190 -0.000	0.60	0.80	56	220 [Note (1)]
20		12	+0.210 -0.000			63	260 [Note (1)]
22		6	+0.175 -0.000			70	280 [Note (1)]
22		14	+0.210 -0.000			80	320 [Note (1)]
25		9	+0.210 -0.000			90	360 [Note (1)]
25		14	+0.190 -0.000			100	400 [Note (1)]
28		10	+0.210 -0.000				
28		16	+0.280 -0.000				
32	+0.090 -0.000	11					
32		18					
36		12		1.00	1.20		
36		20	+0.280 -0.000				
40		22					
45		25					
50		28					
56	+0.125 -0.000	32	+0.310 -0.000	1.60	2.00		
63		32					
70		36					
80		40		2.50	3.00		
90	+0.135 -0.000	45					
100		50					

NOTE:
(1) See 1.8 for preferred maximum length of key.

Copyright ASME International
Provided by IHS under license with ASME
No reproduction or networking permitted without license from IHS Not for Resale

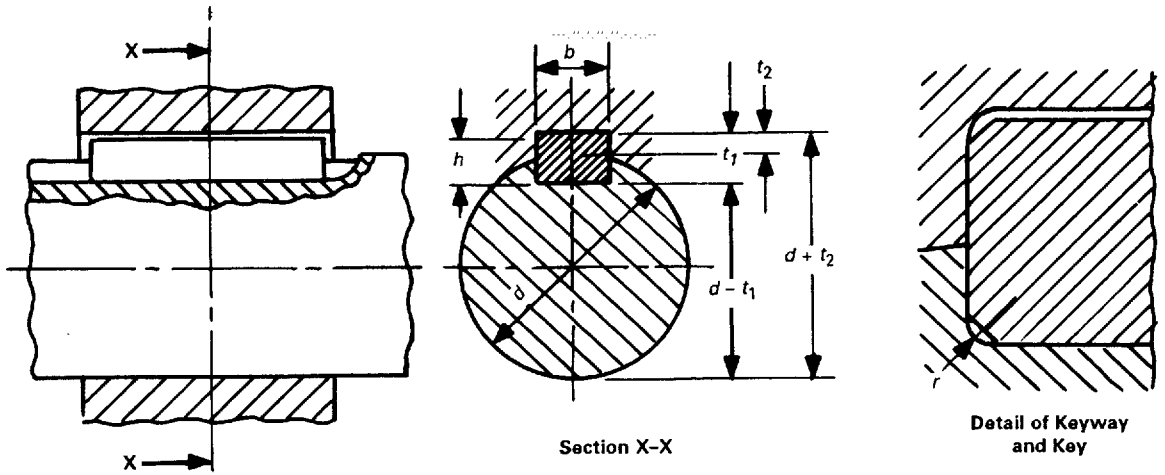

Section X–X

Detail of Keyway and Key

TABLE 2 DIMENSIONS AND TOLERANCES FOR KEYWAYS

Key Size, b×h	Keyway															
	Width											Depth				Radius, r
	Nominal	Tolerance and Resulting Fit [Note (1)]										Shaft, t_1		Hub, t_2		
		Normal Fit				Close Fit		Free Fit								
		Shaft		Hub		Shaft and Hub		Shaft		Hub						
		Tolerance	Fit	Tolerance	Fit	Tolerance	Fit	Tolerance	Fit	Tolerance	Fit	Nominal	Tolerance	Nominal	Tolerance	Max.
2×2	2	+0.040	0.040L	+0.050	0.050L	+0.034	0.034L	+0.066	0.066L	+0.086	0.086L	1.2		1		
3×3	3	+0.010	0.030T	+0.025	0.015T	-0.008	0.032T	+0.040	0T	+0.060	0.020L	1.8		1.4		0.16
4×4	4											2.5		1.8		
5×3	5											1.8	+0.1	1.4	+0.1	
5×5	5	+0.045	0.045L	+0.060	0.060L	+0.035	0.035L	+0.075	0.075L	+0.105	0.105L	3	0	2.8	0	
6×4	6	+0.015	0.030T	+0.015	0.015T	-0.005	0.040T	+0.045	0T	+0.075	0.030L	2.5		1.8		
6×6	6											3.5		2.8		0.25
8×5	8											3		2.8		
8×7	8	+0.055	0.055L	+0.075	0.075L	+0.040	0.040L	+0.090	0.090L	+0.130	0.130L	4	+0.2 0	3.3	+0.2 0	
10×6	10	+0.015	0.035T	+0.035	0.015T	-0.000	0.050T	+0.050	0T	+0.090	0.040L	3.5	+0.1 0	2.8	+0.1 0	0.6
10×8	10											5	+0.2 0	3.3	+0.2 0	

(Table 2 continues on next page)

Copyright ASME International
Provided by IHS under license with ASME
No reproduction or networking permitted without license from IHS
Not for Resale

Copyright ASME International
Provided by IHS under license with ASME
No reproduction or networking permitted without license from IHS

TABLE 2 DIMENSIONS AND TOLERANCES FOR KEYWAYS (CONT'D)

Key Size, bxh	Keyway															
	Width										Depth				Radius, r	
	Nominal	Tolerance and Resulting Fit [Note (1)]									Shaft, t_1		Hub, t_2			
		Normal Fit				Close Fit		Free Fit								
		Shaft		Hub		Shaft and Hub		Shaft		Hub		Nominal	Tolerance	Nominal	Tolerance	Max.	
		Tolerance	Fit	Tolerance	Fit	Tolerance	Fit	Tolerance	Fit	Tolerance	Fit						
12×6	12											3.5	+0.1 0	2.8	+0.1 0		
12×8	12											5	+0.2 0	3.3	+0.2 0		
14×6	14	+0.080	0.080L	+0.095	0.095L	+0.055	0.055L	+0.135	0.135L	+0.185	0.185L	3.5	+0.1 0	2.8	+0.1 0		
14×9	14	-0.030	0.045T	+0.055	0.020T	-0.015	0.060T	+0.075	0T	+0.125	0.050L	5.5		3.8			
16×7	16											4		3.3			
16×10	16											6		4.3			
18×7	18											4		3.3			0.6
18×11	18											7		4.4			
20×8	20											5		3.3			
20×12	10											7.5		4.9			
22×9	10											5.5	+0.2	3.8	+0.2		
22×14	22	+0.085	0.085L	+0.110	0.110L	+0.050	0.050L	+0.135	0.150L	+0.200	0.200L	9	0	5.4	0		
25×9	25	-0.035	0.050T	+0.060	0.025T	-0.010	0.075T	+0.085	0T	+0.110	0.065L	5.5		3.8			
25×14	25											9		5.4			
28×10	28											6		4.3			
28×16	28											10		6.4			
32×11	32											11		4.4			
32×18	32											18		7.4			
36×12	36	0	11.4	0													
56×32	56											20		12.4			
63×32	63	+0.110	0.110L	+0.170	0.170L	+0.090	0.090L	+0.200	0.225L	+0.300	0.300L	20		12.4			1.6
70×36	70	-0.050	0.075T	+0.090	0.035T	-0.020	0.105T	+0.125	0T	+0.225	0.100L	22		14.4			
80×40	80											25		15.4			
90×45	90	+0.130	0.130L	+0.180	0.180L	+0.095	0.095L	+0.225	0.225L	+0.340	0.340L	28		17.4			2.5
100×50	100	-0.050	0.085T	+0.090	0.045T	-0.015	0.120T	+0.135	0T	+0.255	0.120L	31		19.5			

NOTE:
(1) In columns labeled "Fit," an "L" indicates the maximum clearance between the key and the keyway; the "T" indicates the maximum interference between the key and the keyway.

Not for Resale

AMERICAN NATIONAL STANDARDS FOR BOLTS, NUTS, RIVETS, SCREWS WASHERS, AND SIMILAR FASTENERS

Small Solid Rivets ..... B18.1.1-1972(R1995)
Large Rivets ..... B18.1.2-1972(R1995)
Metric Small Solid Rivets ..... B18.1.3M-1983(R1995)
Square and Hex Bolts and Screws (Inch Series) B18.2.1-1996
Square and Hex Nuts (Inch Series) ..... B18.2.2-1987(R1993)
Metric Hex Cap Screws ..... B18.2.3.1M-1979(R1995)
Metric Formed Hex Screws ..... B18.2.3.2M-1979(R1995)
Metric Heavy Hex Screws ..... B18.2.3.3M-1979(R1995)
Metric Hex Flange Screws ..... B18.2.3.4M-1984(R1995)
Metric Hex Bolts ..... B18.2.3.5M-1979(R1995)
Metric Heavy Hex Bolts ..... B18.2.3.6M-1979(R1995)
Metric Heavy Hex Structural Bolts ..... B18.2.3.7M-1979(R1995)
Metric Hex Lag Screws ..... B18.2.3.8M-1981(R1991)
Metric Heavy Hex Flange Screws ..... B18.2.3.9M-1984(R1995)
Square Head Bolts (Metric Series) B18.2.3.10M-1996
Metric Hex Nuts, Style 1 ..... B18.2.4.1M-1996
Metric Hex Nuts, Style 2 ..... B18.2.4.2M-1979(R1995)
Metric Slotted Hex Nuts ..... B18.2.4.3M-1979(R1995)
Metric Hex Flange Nuts ..... B18.4.4.4M-1982(R1993)
Metric Hex Jam Nuts ..... B18.2.4.5M-1979(R1990)
Metric Heavy Hex Nuts ..... B18.2.4.6M-1979(R1990)
Fasteners for Use in Structural Applications B18.2.6-1996
Socket Cap, Shoulder, and Set Screws, Hex and Spline Keys (Inch Series) B18.3-1998
Socket Head Cap Screws (Metric Series) ..... B18.3.1M-1986(R1993)
Metric Series Hexagon Keys and Bits ..... B18.3.2M-1979(R1990)
Hexagon Socket Head Shoulder Screws (Metric Series) ..... B18.3.3M-1986(R1993)
Hexagon Socket Button Head Cap Screws (Metric Series) ..... B18.3.4M-1986(R1993)
Hexagon Socket Flat Countersunk Head Cap Screws (Metric Series) ..... B18.3.5M-1986(R1993)
Metric Series Socket Set Screws ..... B18.3.6M-1986(R1993)
Round Head Bolts (Inch Series) B18.5-1990
Metric Round Head Short Square Neck Bolts B18.5.2.1M-1996
Metric Round Head Square Neck Bolts B18.5.2.2M-1982
Round Head Square Neck Bolts With Large Head (Metric Series) B18.5.2.3M-1990
Wood Screws (Inch Series) ..... B18.6.1-1981(R1991)
Slotted Head Cap Screws, Square Head Set Screws, and Slotted Headless Set Screws ..... B18.6.2-1972(R1993)
Machine Screws and Machine Screw Nuts ..... B18.6.3-1972(R1983)
Thread Forming and Thread Cutting Tapping Screws and Metallic Drive Screws (Inch Series) ..... B18.6.4-1981(R1991)
Metric Thread Forming and Thread Cutting Tapping Screws ..... B18.6.5M-1986(R1993)
Metric Machine Screws ..... B18.6.7M-1985(R1993)
General Purpose Semi-Tubular Rivets, Full Tubular Rivets, Split Rivets and Rivet Caps ..... B18.7-1972(R1992)
Metric General Purpose Semi-Tubular Rivets ..... B18.7.1M-1984(R1992)
Clevis Pins and Cotter Pins (Inch Series) B18.8.1-1994
Taper Pins, Dowel Pins, Straight Pins, Grooved Pins, and Spring Pins (Inch Series) B18.8.2-1995
Spring Pins — Coiled Type (Metric Series) B18.8.3M-1995
Spring Pins — Slotted (Metric Series) B18.8.4M-1994
Machine Dowel Pins — Hardened Ground (Metric Series) B18.8.5M-1994
Cotter Pins (Metric Series) B18.8.6M-1995
Headless Clevis Pins (Metric Series) B18.8.7M-1994
Headed Clevis Pins (Metric Series) B18.8.8M-1994
Grooved Pins (Metric Series) B18.8.9M-1998
Plow Bolts (Inch Series) B18.9-1996
Track Bolts and Nuts ..... B18.10-1982(R1992)
Miniature Screws ..... B18.11-1961(R1992)
Glossary of Terms for Mechanical Fasteners ..... B18.12-1962(R1991)
Screw and Washer Assemblies — Sems (Inch Series) B18.13-1996
Screw and Washer Assemblies — Sems (Metric Series) B18.13.1M-1991
Forged Eyebolts ..... B18.15-1985(R1995)
Mechanical and Performance Requirements for Prevailing-Torque Type Steel Metric Hex Nuts and Hex Flange Nuts ..... B18.16.1M-1979(R1995)
Torque-Tension Test Requirements for Prevailing-Torque Type Steel Metric Hex Nuts and Hex Flange Nuts ..... B18.16.2M-1979(R1995)

Copyright ASME International
Provided by IHS under license with ASME
No reproduction or networking permitted without license from IHS

Not for Resale

Dimensional Requirements for Prevailing-Torque Type Steel
Metric Hex Nuts and Hex Flange Nuts ..... B18.16.3M-1982(R1993)
Wing Nuts, Thumb Screws, and Wing Screws ..... B18.17-1968(R1983)
Inspection and Quality Assurance for General Purpose Fasteners ..... B18.18.1M-1987(R1993)
Inspection and Quality Assurance for High-Volume Machine Assembly Fasteners ..... B18.18.2M-1987(R1993)
Inspection and Quality Assurance for Special Purpose Fasteners ..... B18.18.3M-1987(R1993)
Inspection and Quality Assurance for Fasteners for Highly Specialized
Engineered Applications ..... B18.18.4M-1987(R1993)
Inspection and Quality Assurance Plan Requiring In-Process Inspection and Controls B18.18.5M-1998
Quality Assurance Plan for Fasteners Produced in a Third Party Accreditation System B18.18.6M-1998
Quality Assurance Plan for Fasteners Produced in a Customer Approved Control Plan B18.18.7M-1998
Lock Washers (Inch Series) B18.21.1-1994
Lock Washers (Metric Series) B18.21.2M-1994
Metric Plain Washers ..... B18.22M-1981(R1990)
Plain Washers ..... B18.22.1-1965(R1990)
Part Identifying Number (Pin) Code System Standard for B18 Externally
Threaded Products B18.24.1-1996
Part Identifying Number (PIN) Code System Standard for B18 Nonthreaded Products B18.24.3-1998
Square and Rectangular Keys and Keyways B18.25.1M-1996
Woodruff Keys and Keyways B18.25.2M-1996
Square and Rectangular Keys and Keyways: Width Tolerances and
Deviations Greater Than Basic Size B18.25.3M-1998
Helical Coil Screw Thread Inserts (Inch Series) B18.29.1-1993

The ASME Publications Catalog shows a complete list of all the Standards published by the Society. For a complimentary catalog, or the latest information about our publications, call 1-800-THE-ASME (1-800-843-2763).

Copyright ASME International
Provided by IHS under license with ASME
No reproduction or networking permitted without license from IHS
Not for Resale