STD·ASME B18·2·6-ENGL 1996 0759670 0583071 849

ASME B18.2.6-1996

FASTENERS FOR USE IN STRUCTURAL APPLICATIONS

AN AMERICAN NATIONAL STANDARD

The American Society of Mechanical Engineers

Copyright ASME International
Provided by IHS under license with ASME
No reproduction or networking permitted without license from IHS

Not for Resale

STD.ASME B18.2.6-ENGL 1996 ■ 0759670 0583072 785 ■



The American Society of Mechanical Engineers

AN AMERICAN NATIONAL STANDARD

FASTENERS FOR USE IN STRUCTURAL APPLICATIONS

ASME B18.2.6-1996

Copyright ASME International
Provided by IHS under license with ASME
No reproduction or networking permitted without license from IHS

Not for Resale

Date of Issuance: July 28, 1997

The 1996 edition of this Standard is being issued with an automatic addenda subscription service. The use of an addenda allows revisions made in response to public review comments or committee actions to be published as necessary. The next edition of this standard is scheduled for publication in 1999.

ASME is the registered trademark of The American Society of Mechanical Engineers.

This code or standard was developed under procedures accredited as meeting the criteria for American National Standards. The Consensus Committee that approved the code or standard was balanced to assure that individuals from competent and concerned interests have had an opportunity to participate. The proposed code or standard was made available for public review and comment which provides an opportunity for additional public input from industry, academia, regulatory agencies, and the public-at-large.

ASME does not "approve," "rate," or "endorse" any item, construction, proprietary device, or activity.

ASME does not take any position with respect to the validity of any patent rights asserted in connection with any items mentioned in this document, and does not undertake to insure anyone utilizing a standard against liability for infringement of any applicable Letters Patent, nor assume any such liability. Users of a code or standard are expressly advised that the determination of the validity of any such patent rights, and the risk of infringement of such rights, is entirely their own responsibility.

Participation by federal agency representative(s) or person(s) affiliated with industry is not to be interpreted as government or industry endorsement of this code or standard.

ASME accepts responsibility for only those interpretations issued in accordance with governing ASME procedures and policies which preclude the issuance of interpretations by individual volunteers.

No part of this document may be reproduced in any form,
in an electronic retrieval system or otherwise,
without the prior written permission of the publisher.

The American Society of Mechanical Engineers
345 East 47th Street, New York, NY 10017

Copyright © 1997 by
THE AMERICAN SOCIETY OF MECHANICAL ENGINEERS
All Rights Reserved
Printed in U.S.A.

Copyright ASME International
Provided by IHS under license with ASME
No reproduction or networking permitted without license from IHS

Not for Resale

FOREWORD

(This Foreword is not part of ASME B18.2.6-1996.)

American National Standards Committee B18 for the standardization of bolts, screws, nuts, rivets, and similar fasteners was organized in March 1922, as Sectional Committee B18, under the aegis of the American Engineering Standards Committee (later the American Standards Association, then the United States of America Standards Institute and, as of October 6, 1969, the American National Standards Institute, Inc.), with the Society of Automotive Engineers and the American Society of Mechanical Engineers as joint sponsors. Subcommittee 2 was subsequently established and charged with the responsibility for technical content of standards covering wrench head bolts and nuts.

Subcommittee 2, after appraisal of the requirements of industry, developed a proposed standard series of bolt head and nut dimensions. This proposal was finally approved and designated a Tentative American Standard in February 1927.

A first revision of the document was designated as an American Standard in March 1933, and was followed by a second revision which was granted approval as an American Standard in January 1941.

Following reorganization of the B18 Committee in 1947, Subcommittee 2 was asked to expand the standard on head proportions into a complete product standard. A proposal covering square and hexagon head bolts, and nuts, hexagon head cap screws, and automotive hexagon head bolts was prepared and submitted to the B18 Committee in April 1950. While this draft was under consideration, the B18 Committee received a proposal from the British Standards Institution for unification of dimensions on products incorporating Unified screw threads. The Committee welcomed the opportunity of discussing the proposals and an American-British-Canadian Conference was held in New York, June 1–2, 1950.

It was agreed in the Conference that the essentials of unification could be accomplished by selection of mutually satisfactory across-the-flats dimensions, since this would permit the use of the same wrenches and because other features would rarely affect interchangeability. After due consideration, suitable existing across-the-flats dimensions were selected for the hexagon products affected.

In its meeting of October 13, 1950, Subcommittee 2 agreed to incorporate in the proposed standard the conference recommendations on $\frac{1}{4}$ in. hexagon head bolts, $\frac{5}{8}$ in. hexagon head cap screws and automotive hexagon head bolts, $\frac{5}{16}$ and $\frac{3}{8}$ in. regular hexagon and square nuts, and $\frac{7}{16}$ in. light and regular hexagon and square nuts. At a subsequent meeting of Subcommittee 2, further changes were adopted in order to combine the light and regular series of nuts and to combine the automotive hexagon head bolt, hexagon head cap screw, and regular hexagon head close tolerance bolt.

In view of the progress made in the United States and the urgency of standardization for mutual defense, the British Standards Institution sponsored a second Conference in London in April 1951, to complete the unification of certain hexagon bolts and nuts.

At a meeting on June 8, 1951, Subcommittee 2 reaffirmed its acceptance of the unified dimensions, which corresponded with those in the March 1951 draft, but attempted to select better nomenclature for the unified products. A final draft incorporating the nomenclature *Finished Hexagon Bolts and Nuts* and containing numerous editorial changes was submitted for letter

Copyright ASME International
Provided by IHS under license with ASME
No reproduction or networking permitted without license from IHS
Not for Resale

ballot in September 1951. Following approval by the B18 Committee and the sponsors, the proposal was presented to the American Standards Association for approval and designation as an American Standard. This was granted on March 24, 1952.

Recognizing the standard was in need of additional refinements, Subcommittee 2 began immediately to revise it, removing inconsistencies with respect to fillets, improving the length tolerances on heavy hexagon bolts, and incorporating numerous other corrections and clarifications. The most noteworthy editorial change was a decision to combine the coverage for hexagon cap screws and square head set screws from the B18.2 standard with the coverage for slotted head cap screws and slotted headless set screws from the B18.6 standard and publish them in a separate document. The requirements for the unified hexagon cap screws and finished hexagon bolts being identical in the overlapping sizes, this data would now be available in two publications. Following approvals by the B18 Committee and sponsor organizations, the proposal was submitted to the American Standards Association and declared an American Standard on February 2, 1955.

A revision of this document comprised of numerous editorial corrections and inclusion of an appendix for grade markings was duly approved and designated an American Standard on April 18, 1960.

At a meeting in February 1960, Subcommittee 2 approved a recommendation to reduce the head heights for heavy, heavy semi-finished, and heavy finished hexagon bolts which was subsequently approved by letter ballot of the B18 Committee on August 16, 1960. A proposed standard for heavy hexagon structural bolts submitted and accepted by Subcommittee 2 at its October 17, 1960 meeting was approved by letter ballot of the B18 Committee on May 9, 1961. To meet the urgent needs of the steel construction industry, it was considered necessary to publish the standard for the structural bolts immediately. Consequently, Appendix IV to ASA B18.2-1960 containing coverage for the revised heavy hexagon bolts and the new heavy hexagon structural bolts was released in 1962.

In October of 1961, Subcommittee 2 appointed a subgroup to review all product standards for square and hexagon bolts, screws, and nuts, and to recommend simplifications which would be compatible with technical, production, and distribution advances that had occurred over the prior several years. The subgroup presented its recommendations at a meeting of Subcommittee 2 in October of 1962. It was agreed that the internally and externally threaded products should be published in separate documents as suggested, and draft proposals for each were completed.

The proposed revision for square and hex bolts and screws incorporated the following subgroup recommendations: consolidation of hexagon head cap screws and finished hexagon bolts into a single product; consolidation of heavy semifinished hexagon bolts and heavy finished hexagon bolts into a single product; elimination of regular semifinished hexagon bolts; a new length toleranicing pattern for all bolts and screws; documentation of a positive identification procedure for determining whether an externally threaded product should properly be designated a bolt or a screw; and an abbreviated and purified set of product nomenclature reflecting application of the identification procedure. Letter ballot of this proposal to the B18 Committee in March 1964 resulted in several comments which were resolved to the satisfaction of the Committee in June of 1964. Following acceptance by the sponsor organizations, the revision was submitted to the American Standards Association and was designated American Standard ASA B18.2.1 on September 8, 1965.

Subcommittee 2 in 1992 recognized the values of having all structural products in a single standard. In a revision initiated for the B18.2.1 standard in that year, it was proposed to remove the Heavy Hex Structural Bolt from the B18.2.1 standard, the Heavy Hex Nut from the B18.2.2 standard and combine these with the dimensions of hardened steel washers from ASTM F 436 and the compressible-washer-type direct tension indicator dimensions of ASTM F 959. This new standard would then provide all standardized dimensions for the fasteners intended for use in structural applications. The first draft of this Standard was submitted to Subcommittee 2 at its May 1993 meeting.

ASME B18.2.6-1996 was approved by the American National Standards Institute (ANSI) on December 4, 1996.

Copyright ASME International
Provided by IHS under license with ASME
No reproduction or networking permitted without license from IHS
Not for Resale

ASME STANDARDS COMMITTEE B18
Standardization of Bolts, Nuts, Rivets, Screws, Washers, and Similar Fasteners

(The following is the roster of the Committee at the time of approval of this Standard.)

OFFICERS

K. E. McCullough, *Chair*
D. A. Clever, *Vice Chair*
E. Schwartz, *Vice Chair*
B. Biddinger, *Secretary*

COMMITTEE PERSONNEL

J. C. Akins, Safety Socket Screw Co.
J. B. Belford, Lawson Products, Inc.
B. Biddinger, The American Society of Mechanical Engineers
D. Broomfield, Illinois Tool Works, Inc.
J. A. Buda, SPS Technologies, Inc.
R. M. Byrne, Trade Association Management, Inc.
D. A. Clever, Deere & Co.
A. P. Cockman, Ford Motor Co.
T. Collier, CAM-TECH Industries, Inc.
A. C. DiCola, Wrought Washer Manufacturing, Inc.
B. A. Dusina, Federal Screw Works
G. A. Gobb, Consultant
R. J. Harrington, Spirol International Corp.
A. Herskovitz, U.S. Army
A. C. Hood, ACH Technologies
F. W. Kern, Society of Automotive Engineers
W. H. Kopke, ITW Shakeproof Industrial Products
P. D. Korsmo, Consultant
J. G. Langenstein, Consultant
M. Levinson, ITW Shakeproof Industrial Products
J. B. Levy, Consultant
A. D. McCrindle, Stelco Fasteners, Ltd.
K. E. McCullough, Consultant
D. J. Miley, Caterpillar, Inc.
M. D. Prasad, General Motors Corp.
W. Schevey, BGM Fastener Co., Inc.
E. Schwartz, Consultant
R. M. Serabin, Bowman Distribution
R. D. Strong, General Motors Corp.
J. F. Sullivan, National Fasteners Distribution Association
R. L. Tennis, Caterpillar, Inc.
S. W. Vass, Lake Erie Screw Corp.
R. G. Weber, Fairfield University
C. J. Wilson, Industrial Fasteners Institute
R. B. Wright, Wright Tool Co.
J. G. Zeratsky, National Rivet & Manufacturing Co.

Copyright ASME International
Provided by IHS under license with ASME
No reproduction or networking permitted without license from IHS
Not for Resale

MEMBERS OF SUBCOMMITTEE 2 — EXTERNAL DRIVE FASTENERS

D. A. Clever, *Chair,* Deere & Co.
C. J. Wilson, *Secretary,* Industrial Fasteners Institute
R. M. Byrne, Trade Association Management, Inc.
A. P. Cockman, Ford Motor Co.
R. J. Corbett, Huck International Industrial Fasteners
A. Dinh, Defense Industrial Supply Center
B. A. Dusina, Federal Screw Works
J. Greenslade, Greenslade & Co.
A. Herskovitz, U.S. Army
A. D. McCrindle, Stelco Fasteners Ltd.
K. E. McCullough, Consultant
D. J. Miley, Caterpillar, Inc.
M. D. Prasad, General Motors Corp.
R. D. Strong, General Motors Corp.
R. L. Tennis, Caterpillar, Inc.
S. W. Vass, Lake Erie Screw Corp.

Copyright ASME International
Provided by IHS under license with ASME
No reproduction or networking permitted without license from IHS
Not for Resale

CONTENTS

Foreword iii
Committee Roster v

1 Introductory Notes 1
2 Heavy Hex Structural Bolts 1
3 Heavy Hex Nuts 2
4 Hardened Steel Washers 3
5 Compressible Washer-Type Direct Tension Indicators 4

Tables
1 Dimensions of Heavy Hex Structural Bolts 6
2 Dimensions of Heavy Hex Nuts for Use With Structural Bolts 9
3 Dimensions for Hardened Steel Circular and Circular Clipped Washers 11
4 Dimensions of Hardened Beveled Washers With Slope or Taper in Thickness 1:6 12
5 Dimensions for Compressible Washer-Type Direct Tension Indicators 13

Copyright ASME International
Provided by IHS under license with ASME
No reproduction or networking permitted without license from IHS
Not for Resale

FASTENERS FOR USE IN STRUCTURAL APPLICATIONS

1 INTRODUCTORY NOTES

1.1 Scope

1.1.1 This Standard covers the complete general and dimensional data for four products in the inch series recognized as American National Standard. Heavy hex nut thickness formulas and those for width across flats and width across corners are found in the Appendix of ASME B18.2.2.

1.1.2 The inclusion of dimensional data in this Standard is not intended to imply that all products described herein are stock production sizes. Consumers should consult with manufacturers concerning lists of available stock production sizes.

1.1.3 Fasteners intended for use in structural applications and purchased for government use shall conform to this Standard.

1.2 Dimensions

All dimensions in this Standard are in inches unless stated otherwise, and apply to unplated or uncoated product. When plating or coating is specified, the finished product dimensions shall be as agreed upon between supplier and purchaser. Symbols specifying geometric characteristics are in accord with ASME Y14.5M, Dimensioning and Tolerancing.

1.3 Options

Options, where specified, shall be at the discretion of the manufacturer unless otherwise agreed upon by the purchaser with the manufacturer or distributor.

1.4 Terminology

For definitions of terms relating to fasteners or component features thereof used in this Standard, refer to ASME Glossary of Terms for Mechanical Fasteners ASME B18.12.

1.5 Related Standards

Dimensional Standards for other fasteners used in construction are published by ASME under separate covers such as B18.2.1 and B18.2.2.

Standards for chemical and mechanical requirements for structural bolts are included in ASTM A 325 and ASTM A 490. Heavy hex nuts are included in ASTM A 563. Hardened steel washers are included in ASTM F 436, and compressible-washer-type direct tension indicators in ASTM F 959.

1.6 Referenced Standards

Unless otherwise specified, the referenced standard shall be the most recent issue at the time of order placement.

Copies of referenced ASME Standards may be obtained from the American Society of Mechanical Engineers, 22 Law Drive, P.O. Box 2300, Fairfield, NJ 07007-2300.

Copies of referenced ASTM standards may be obtained from the American Society for Testing and Materials, 100 Barr Harbor Drive, West Conshohocken, PA 19428-2959.

Copies of the allowable stress design and load and resistance factor design specification for structural joints using ASTM A 325 or ASTM A 490 bolts approved by the Research Council on Structural Connections (RCSC) are available from the American Institute of Steel Construction, One East Wacker Drive, Suite 3100, Chicago, IL 60601-2001, or the Industrial Fasteners Institute, 1717 East Ninth Street, Suite 1105, Cleveland, Ohio 44114-2879.

2 HEAVY HEX STRUCTURAL BOLTS

2.1 Heads

2.1.1 Width Across Flats. The width across flats of heads shall be the distance measured perpendicular to the axis of product, overall between two opposite sides of the head in accordance with the notes in the dimensional table.

Copyright ASME International
Provided by IHS under license with ASME
No reproduction or networking permitted without license from IHS
Not for Resale

2.1.2 Head Height. The head height shall be that overall distance measured parallel to the axis of the product from the top of the head to the bearing surface and shall include the thickness of the washer face. Raised grade and manufacturer's identification are excluded from head height.

2.2 Bolt Length

The bolt length shall be the distance measured parallel to the axis of the product from the bearing surface of the head to the extreme end of the bolt including point.

2.3 Threads

Threads shall be cut or rolled in accordance with ASME B1.1. When specified, 8 thread series may be used on bolts over 1 in. in diameter. Structural bolts shall not be undersized to accommodate heavy coatings. Threads which have been hot-dipped or mechanically zinc coated shall meet the requirements specified in ASTM A 325.

2.4 Body Diameter

The body diameter limits are shown in Table 1.

2.5 Finish

Unless otherwise specified, bolts shall be supplied with a plain (as processed) finish. Bolts to ASTM A 490 shall not be metallic coated.

2.6 Materials

Chemical and mechanical properties of steel bolts shall conform to ASTM A 325 or ASTM A 490.

2.7 Workmanship

Bolts shall be free from burrs, seams, laps, loose scale, irregular surfaces, and any defects affecting serviceability. When control of surface discontinuities is required, the purchaser shall specify conformance to ASTM F 788/F 788M, Surface Discontinuities of Bolts, Screws, and Studs, Inch and Metric Series.

2.8 Designation

Heavy hex structural bolts shall be designated by the following data in the sequence shown: product name, nominal size (fractional or decimal equivalent), threads per inch, product length (fractional or two-place decimal equivalent), material (including specification and type where necessary), and protective finish (if required). See example below:

EXAMPLE:
Heavy Hex Structural Bolt, ¾–10 × 2¼, ASTM A 325, Type 1, Hot-Dipped Zinc Coated

2.9 Identification Symbols

2.9.1 Grade Symbols. Each bolt shall be marked in accordance with the requirements of the applicable specification; ASTM A 325 or ASTM A 490 and requirements of Table 1, Note (13).

2.9.2 Source Symbols. Each bolt shall be marked to identify its source (manufacturer, or private label distributor) accepting the responsibility for conformance to this and other applicable specifications.

2.10 Quality Assurance

Unless otherwise specified, products shall be furnished in accordance with ASME B18.18.1M and ASME B18.18.2M as noted in para. 2.11.

2.11 Dimensional Characteristics

Bolts shall conform to the dimensions indicated in Table 1. The designated characteristics defined in Table 1, Note (16) shall be inspected in accordance with ASME B18.18.2M. For nondesignated characteristics, the provisions of ASME B18.18.1M shall apply. Should a nondesignated dimension be determined to have a variance, it shall be deemed conforming to this Standard if the user, who is the installer, accepts the variance based on fit, form, and function considerations. Where verifiable in-process inspection is used in accordance with ASME B18.18.3M or ASME B18.18.4M, the final inspection level sample sizes of those respective standards shall apply.

3 HEAVY HEX NUTS

3.1 Width Across Flats

The width across flats of heavy hex nuts shall be the overall distance measured, perpendicular to the axis of the nut, between two opposite sides of the nut in accordance with the notes of Table 2. For milled-from-bar hex nuts, the nominal bar size used shall be the closest commercially available size to the specified basic width across flats of the nut.

Copyright ASME International
Provided by IHS under license with ASME
No reproduction or networking permitted without license from IHS
Not for Resale

3.2 Nut Thickness

The nut thickness shall be the overall distance measured parallel to the axis of nut, from the top of the nut to the bearing surface, and shall include the thickness of the washer face where provided.

3.3 Threads

Threads shall be in accordance with Table 2, Note (7).

3.3.1 Thread Gaging. Unless otherwise specified by the purchaser, gaging for screw thread dimensional acceptability shall be in accordance with Gaging System 21 as specified in ASME B1.3M Screw Thread Gaging Systems for Dimensional Acceptability—Inch and Metric Screw Threads (UN, UNR, UNJ, M, and MJ).

3.3.2 Overtapping. When nuts are zinc coated, they shall be overtapped after coating in accordance with the provisions of ASTM A 563.

3.4 Finish

Unless otherwise specified, nuts shall be supplied with a plain (as-processed) finish, unplated or uncoated.

3.5 Materials

Chemical and mechanical properties of heavy hex nuts shall conform to ASTM A 563.

3.6 Workmanship

Nuts shall be free from burrs, seams, laps, loose scale, irregular surfaces, and any defects affecting their serviceability. When control of surface discontinuities is required, the purchaser shall specify conformance to ASTM F 812/F 812M, Surface Discontinuities of Nuts—Inch and Metric Series.

3.7 Designation

Nuts shall be designated by the following data in sequence shown: product name, nominal size (fraction or decimal), threads per inch, material (including specification where necessary), protective finish (if required). See example below:

EXAMPLE:
Heavy Hex Nut, ½–13, ASTM A 563 Grade C, Plain Finish

3.8 Identification Symbols

3.8.1 Grade Symbols. Each nut shall be marked in accordance with the requirements of the applicable specification: ASTM A 563 or ASTM A 194.

3.8.2 Source Symbols. Each nut shall be marked to identify its source (manufacturer, or private label distributor) accepting the responsibility for conformance to this and other applicable specifications.

3.9 Quality Assurance

Unless otherwise specified, products shall be furnished in accordance with ASME B18.18.1M and ASME B18.18.2M as noted in para. 3.10.

3.10 Dimensional Characteristics

Products shall conform to the dimensions indicated for the heavy hex nut in Table 2. The designated characteristics defined in Table 2, Note (8) shall be inspected in accordance with ASME B18.18.2M. For nondesignated characteristics, the provision of B18.18.1M shall apply. Should a nondesignated dimension be determined to have a variance, it shall be deemed conforming to this Standard if the user, who is the installer, accepts the variance based on fit, form, and function considerations. Where verifiable in-process inspection is used in accordance with ASME B18.18.3M or ASME B18.18.4M, the final inspection level sample sizes of those respective standards shall apply.

4 HARDENED STEEL WASHERS

4.1 Flat Washers

4.1.1 Dimensions. All circular and circular clipped washers shall conform to the dimensions shown in Table 3.

4.1.2 Tolerances. Washer inside diameter, outside diameter, thickness, and edge distance shall be in accordance with Table 3. The deviation from flatness shall not exceed 0.010 in. as the maximum deviation from a straight edge placed on the cut side. Circular runout of the outside diameter with respect to the hole shall not exceed 0.030 FIM. Burrs shall not project above immediately adjacent washer surface more than 0.010 in.

4.1.3 Finish. Unless otherwise specified, washers shall be supplied with a plain (as processed) finish. If zinc coatings are required, they shall be in accordance with ASTM F 436.

Copyright ASME International
Provided by IHS under license with ASME
No reproduction or networking permitted without license from IHS
Not for Resale

4.1.4 Materials. Materials shall conform to the requirements established by ASTM F 436.

4.1.5 Workmanship. Washers shall be free from burrs, seams, laps, loose scale, irregular surfaces, and any defects affecting serviceability.

4.1.6 Designation. Washers shall be designated by the following data in the sequence shown: product name, nominal size (fraction or decimal), material specification, protective finish (if required). See example below:

EXAMPLE:
Hardened Steel Circular Washer, 1⅛ ASTM F 436, Hot-Dip Galvanized in Accordance with ASTM A 153 Class C

4.1.7 Identification Symbols. Grade and source marking and symbols shall conform to the requirements of ASTM F 436. The source marking is intended to identify the source accepting the responsibility for the conformance to this and other applicable specifications.

4.1.8 Quality Assurance. Unless otherwise specified, products shall be furnished in accordance with ASME B18.18.1M and ASME B18.18.2M as noted in para. 4.1.9.

4.1.9 Dimensional Characteristics. Washers shall conform to the dimensions indicated in Table 3. The designated characteristics defined in Table 3, Note (1) shall be inspected in accordance with ASME B18.18.2M. For nondesignated characteristics, the provisions of ASME B18.18.1M shall apply. Should a nondesignated dimension be determined to have a variance, it shall be deemed conforming to this Standard if the user, who is the installer, accepts the variance based on fit, form, and function considerations. Where verifiable in-process inspection is used in accordance with ASME B18.18.3M or ASME B18.18.4M, the final inspection level sample sizes of those respective standards shall apply.

4.2 Beveled Washers

4.2.1 Dimensions. All square beveled and clipped square beveled washers shall conform to the dimensions shown in Table 4.

4.2.2 Tolerances. Tolerances for inside diameter for beveled washers shall be in accordance with Table 4. The flatness shall not exceed 0.010 in. as the maximum deviation from a straight edge placed on the cut side. Burrs shall not project above immediately adjacent washer surface more than 0.010 in.

4.2.3 Finish. Unless otherwise specified, washers shall be supplied with a plain (as-processed) finish. If zinc coatings are required, they shall be in accordance with ASTM F 436.

4.2.4 Materials and Mechanical Properties. Materials and properties shall conform to the requirements established by ASTM F 436.

4.2.5 Workmanship. Washers shall be free from burrs, seams, laps, loose scale, irregular surfaces, and any defects affecting serviceability.

4.2.6 Designation. Washers shall be designated by the following data in the sequence shown: product name, nominal washer size (fraction or decimal), material specification, protective finish (if required). See example below:

EXAMPLE:
Square Beveled Washer, 1¼ ASTM F 436, Hot-Dip Galvanized in Accordance with ASTM A 153 Class C

4.2.7 Identification Symbols. Grade and source marking and symbols shall conform to the requirements of ASTM F 436. The source marking is intended to identify the source accepting the responsibility for conformance to this and other applicable specifications.

4.2.8 Quality Assurance. Unless otherwise specified, products shall be furnished in accordance with ASME B18.18.1M and ASME B18.18.2M as noted in para. 4.2.9.

4.2.9 Dimensional Characteristics. Washers shall conform to the dimensions specified in Table 4. The designated characteristics defined in Table 4, Note (1) shall be inspected in accordance with ASME B18.18.2M. For nondesignated characteristics, the provisions of ASME B18.18.1M shall apply. Should a nondesignated dimension be determined to have a variance, it shall be deemed conforming to this Standard if the user, who is the installer, accepts the variance based on fit, form, and function considerations. Where verifiable in-process inspection is used in accordance with ASME B18.18.3M or B18.18.4M, the final inspection level sample sizes of these respective standards shall apply.

5 COMPRESSIBLE WASHER-TYPE DIRECT TENSION INDICATORS

5.1 Dimensions

The dimensions for the two washer types of direct tension indicators, Type A 325 and A 490, shall be in accordance with Table 5.

Copyright ASME International
Provided by IHS under license with ASME
No reproduction or networking permitted without license from IHS
Not for Resale

5.2 Finish

Unless otherwise specified, direct tension indicators shall be supplied with a plain (as-processed) finish, unplated, or uncoated. If zinc coatings are required, they shall be in accordance with ASTM F 959.

5.3 Materials and Performance

Direct tension indicators shall conform to the requirements of ASTM F 959.

5.4 Workmanship

The workmanship shall be smooth and free of burrs, laps, seams, excess mill scale, and foreign material on bearing surfaces or in protrusion welds, or other defects which would make them unsuitable for intended application.

5.5 Designation

Compressible washer-type direct tension indicators shall be designated by the following data in the sequence shown: product name, nominal size (fractional or decimal equivalent), type (325 or 490), finish (plain, zinc, or epoxy). See example below:

EXAMPLE:
DTI, ½, Type 325, Plain Finish

5.6 Identification Symbols

Grade and source marking and symbols shall conform to the requirements of ASTM F 959.

5.6.1 Lot Number. Each direct tension indicator shall be marked with a lot number in accordance with ASTM F 959.

5.7 Quality Assurance

Unless otherwise specified, products shall be furnished in accordance with ASME B18.18.1M and ASME B18.18.2M as noted in para. 5.8.

5.8 Dimensional Characteristics

Direct tension indicators shall conform to the dimensions indicated in Table 5. The designated characteristics defined in Table 5, Note (1) shall be inspected in accordance with ASME B18.18.2M. For nondesignated characteristics, the provisions of ASME B18.18.1M shall apply. Should a nondesignated dimension be determined to have a variance, it shall be deemed conforming to this Standard if the user, who is the installer, accepts the variance based on fit, form, and function considerations. Where verifiable in-process inspection is used in accordance with ASME B18.18.3M or B18.18.4M, the final inspection level sample sizes of these respective standards shall apply.

Copyright ASME International
Provided by IHS under license with ASME
No reproduction or networking permitted without license from IHS
Not for Resale

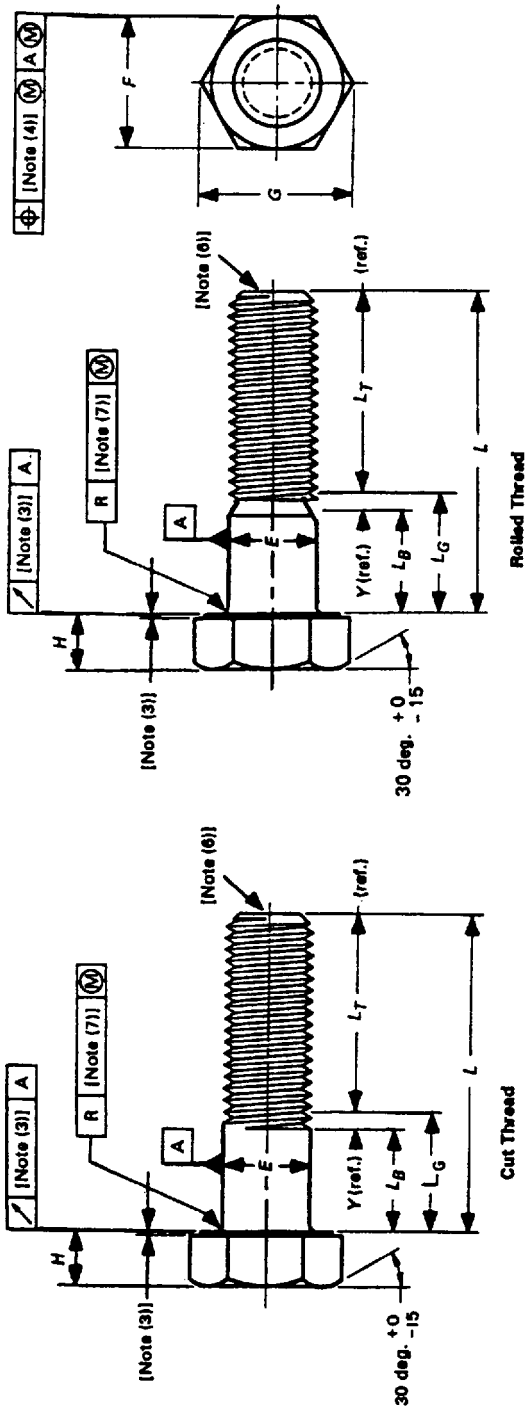

TABLE 1 DIMENSIONS OF HEAVY HEX STRUCTURAL BOLTS

Nominal Size or Basic Product Diameter		E		F		G	H		R		L_T	Y	Total Runout of Bearing Surface FIM
		Body Diameter [Note (5)]		Width Across Flats [Note (2)]		Width Across Corners	Head Height		Radius of Fillet		Thread Length [Note (10)]	Transition Thread Length [Note (10)]	[Note (3)]
[Note (15)]		Max.	Min.	Basic	Max.	Min.	Basic	Max.	Min.	Max.	Ref.	Max., Ref.	Max.
1/2	0.5000	0.515	0.482	7/8	0.875	0.850	1.010	0.969	5/16	0.323	0.302	0.031	0.009	1.00	0.19	0.016
5/8	0.6250	0.642	0.605	1 1/16	1.062	1.031	1.227	1.175	25/64	0.403	0.378	0.062	0.021	1.25	0.22	0.019
3/4	0.7500	0.768	0.729	1 1/4	1.250	1.212	1.443	1.383	15/32	0.483	0.455	0.062	0.021	1.38	0.25	0.022
7/8	0.8750	0.895	0.852	1 7/16	1.438	1.394	1.660	1.589	35/64	0.563	0.531	0.062	0.031	1.50	0.28	0.025
1	1.0000	1.022	0.976	1 5/8	1.625	1.575	1.876	1.796	39/64	0.627	0.591	0.093	0.062	1.75	0.31	0.028
1 1/8	1.1250	1.149	1.098	1 13/16	1.812	1.756	2.093	2.002	11/16	0.718	0.658	0.093	0.062	2.00	0.34	0.032
1 1/4	1.2500	1.277	1.223	2	2.000	1.938	2.309	2.209	25/32	0.813	0.749	0.093	0.062	2.00	0.38	0.035
1 3/8	1.3750	1.404	1.345	2 3/16	2.188	2.119	2.526	2.416	27/32	0.878	0.810	0.093	0.062	2.25	0.44	0.038
1 1/2	1.5000	1.531	1.470	2 3/8	2.375	2.300	2.742	2.622	15/16	0.974	0.902	0.093	0.062	2.25	0.44	0.041

Copyright ASME International
Provided by IHS under license with ASME
No reproduction or networking permitted without license from IHS
Not for Resale

Notes to Table 1:

NOTE: Additional requirements in Section 2.

(1) **Top of Head.** Top of head shall be full form and chamfered or rounded with the diameter of chamfer circle or start of rounding being equal to the maximum width across flats within a tolerance of minus 15%.

(2) **Head Taper.** Maximum width across flats shall not be exceeded. No transverse section through the head between 25% and 75% of actual head height, as measured from the bearing surface, shall be less than the minimum width across flats.

(3) **Bearing Surface.** Bearing surface shall be flat and washer faced. Diameter of washer face shall be equal to the maximum width across flats within a tolerance of minus 10%.

Thickness of the washer face shall be not less than 0.015 in. nor greater than 0.025 in. for bolt sizes 3/4 in. and smaller; and not less than 0.015 in. nor greater than 0.035 in. for sizes larger than 3/4 in.

The plane of the bearing surface shall be perpendicular to the axis of the body within the FIM limits specified for total runout. Measurement of FIM shall extend as close to the periphery of the bearing surface as possible while the bolt is being held in a collet or other gripping device at a distance of one bolt diameter from the underside of the head.

(4) **True Position of Head.** The axis of the head shall be located at true position with respect to the axis of the body (determined over a distance under the head equal to one diameter) within a tolerance zone having a diameter equivalent to 6% of the maximum width across flats at maximum material condition.

(5) **Body Diameter.** Any swell or fin under the head or any die seam on the body should not exceed the basic bolt diameter by the following:

0.030 in. for sizes 1/2 in.
0.050 in. for sizes 5/8 and 3/4 in.
0.060 in. for sizes over 3/4 in. to 1 1/4 in.
0.090 in. for sizes over 1 1/4 in.

(6) **Point.** Point shall be chamfered or rounded at the manufacturer's option from approximately 0.016 in. below the minor diameter of the thread. The first full formed thread at major diameter is located a distance no greater than 2 times the pitch measured from the end of the screw. This distance is to be determined by measuring how far the point enters into a cylindrical NOT GO major diameter ring gage (reference Gage 3.1, ASME B1.2).

(7) **Straightness.** Shanks of bolts shall be straight within the following limits at MMC; for bolts with nominal lengths to and including 12 in. the maximum camber shall be 0.006 in. per inch (0.006L) of bolt length, and for bolts with nominal lengths over 12 in. to and including 24 in. the maximum camber shall be 0.008 in. per inch (0.008L) of length. A suggested gage and gaging procedure for checking bolt straightness is given in Appendix II of B18.2.1, Square and Hex Bolts and Screws, Inch Series.

(8) **Bolt Length.** Bolts are normally supplied in 1/4 in. length increments, all lengths.

(9) **Length Tolerance.** Bolt length tolerances shall be as tabulated below:

Nominal Bolt Size	1/2	5/8	3/4 Through 1	1 1/8 Through 1 1/2
Nominal Bolt Length	Tolerance of Length			
Through 6 in.	−0.12	−0.12	−0.19	−0.25
Over 6 in.	−0.19	−0.25	−0.25	−0.25

(10) **Thread Length.** The length of thread on bolts shall be controlled by the grip gaging length, L_G, max., and the body length, L_B, min., as follows.

Grip gaging length, L_G, max., is the distance measured parallel to the axis of bolt from the underhead bearing surface to the face of a noncounterbored or noncountersunk standard GO thread ring gage assembled by hand as far as the thread will permit. It shall be used as the criterion for inspection. The maximum grip gaging length, as calculated and rounded to two decimal places for any bolt not threaded full length, shall be equal to the nominal bolt length minus the basic thread length (L_G, max. = L, nom. − L_T). For bolts which are threaded full length, L_G, max. defines the unthreaded length under the head and shall not exceed the length of 2.5 times the thread pitch for sizes up to and including 1 in., and 3.5 times the thread pitch for sizes larger than 1 in., L_G, max. represents the minimum design grip length of the bolt and may be used for determining thread availability when selecting bolt lengths even though useable threads may extend beyond this point.

Basic thread length, L_T, is a reference dimension, intended for calculation purposes only, which represents the distance from the extreme end of the bolt to the last complete (full form) thread.

Body length, L_B, min., is the distance measured parallel to the axis of bolt from the underhead bearing surface to the last scratch of thread or to the top of the extrusion angle. It shall be used as a criterion for inspection. The minimum body length, as calculated and rounded to two decimal places, shall be equal to the maximum grip gaging length minus the maximum transition thread length

Copyright ASME International
Provided by IHS under license with ASME
No reproduction or networking permitted without license from IHS
Not for Resale

(L_B, min. = L_G, max. − Y, max.). Bolts of nominal lengths which have a calculated L_B, min. length equal to or shorter than 2.5 times the thread pitch for sizes 1 in. and smaller, and 3.5 times the thread pitch for sizes larger than 1 in. shall be threaded for full length.

Transition thread length Y is a reference dimension, intended for calculation purposes only, which represents the length of incomplete threads and tolerance on grip gaging length.

(11) **Incomplete Thread Diameter.** The major diameter of incomplete thread shall not exceed the actual major diameter of the full form thread.

(12) **Threads.** Threads, when rolled, shall be in the Unified Inch coarse or 8 thread series (UNRC or 8 UNR Series), Class 2A. Threads produced by other methods may be Unified Inch coarse or 8 thread series (UNC or 8 UN Series), Class 2A. Acceptability of screw threads shall be determined based on System 21, ASME B1.3M, Screw Thread Gaging Systems for Dimensional Acceptability, unless otherwise specified.

(13) **Identification Symbols.** Identification marking symbols on the tops of heads for bolt sizes $^5/_8$ in. and smaller shall project not less than 0.005 in. above the surface nor more than 0.015 in. over the specified maximum head height. Bolt sizes larger than $^5/_8$ in. shall project not less than the equivalent in inches of 0.0075 times the basic bolt diameter above the surface nor more than 0.030 in. over the specified maximum head height.

(14) **Material.** Chemical and mechanical properties of steel bolts shall conform to ASTM A 325 or ASTM A 490.

(15) **Nominal Size.** Where specifying nominal size in decimals, zeros preceding the decimal and in the fourth decimal place shall be omitted.

(16) **Dimensional Conformance.** Heavy hex structural bolts shall have the following characteristics inspected to ASME B18.18.2M to the inspection levels shown.

Characteristic	Inspection Level
Threads	C
Width across corners	C
Head height	C
Grip length	C
Visual	C

If verifiable in-process inspection is used, see para. 2.11.

Copyright ASME International
Provided by IHS under license with ASME
No reproduction or networking permitted without license from IHS
Not for Resale

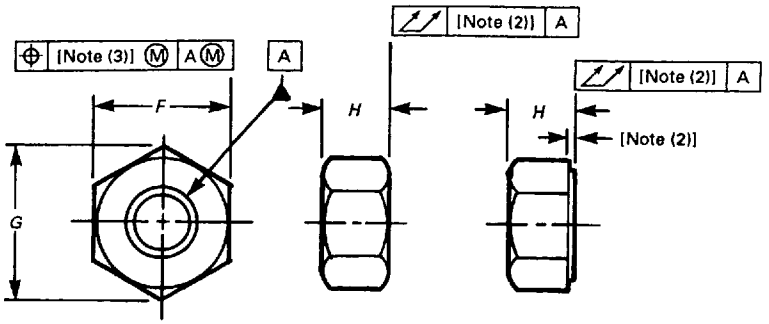

TABLE 2 DIMENSIONS OF HEAVY HEX NUTS FOR USE WITH STRUCTURAL BOLTS

Nominal Size or Basic Major Diameter of Thread		*F* Width Across Flats			*G* Width Across Corners		*H* Thickness			Runout of Bearing Face FIM, Heavy Hex Nuts, Specified Proof Load	
		Basic	Max.	Min.	Max.	Min.	Basic	Max.	Min.	Up to 150,000 psi	150,000 psi and Greater
1/2	0.5000	7/8	0.875	0.850	1.010	0.969	31/64	0.504	0.464	0.023	0.016
5/8	0.6250	1 1/16	1.062	1.031	1.227	1.175	39/64	0.631	0.587	0.025	0.018
3/4	0.7500	1 1/4	1.250	1.212	1.443	1.382	47/64	0.758	0.710	0.027	0.020
7/8	0.8750	1 7/16	1.438	1.394	1.660	1.589	55/64	0.885	0.833	0.029	0.022
1	1.0000	1 5/8	1.625	1.575	1.876	1.796	63/64	1.012	0.956	0.031	0.024
1 1/8	1.1250	1 13/16	1.812	1.756	2.093	2.002	1 7/64	1.139	1.079	0.033	0.027
1 1/4	1.2500	2	2.000	1.938	2.309	2.209	1 7/32	1.215	1.187	0.035	0.030
1 3/8	1.3750	2 3/16	2.188	2.119	2.526	2.416	1 11/32	1.378	1.310	0.038	0.033
1 1/2	1.5000	2 3/8	2.375	2.300	2.742	2.622	1 15/32	1.505	1.433	0.041	0.036
[Note (1)]		[Note (6)]			[Note (5)]					[Note (2)]	

Copyright ASME International
Provided by IHS under license with ASME
No reproduction or networking permitted without license from IHS
Not for Resale

Notes to Table 2:

NOTE: Additional requirements in Section 3. Complete table included in B18.2.2 Square and Hex Nuts (Inch Series)

(1) **Unification.** Only the $^{9}/_{16}$ size is not unified dimensionally with British and Canadian standards. Unification of fine thread products is limited to sizes 1 in. and under.

(2) **Tops and Bearing Surfaces of Nuts.** Nuts may be double chamfered or have washer faced bearing surface and chamfered top.

The diameter of chamfer circle on double chamfered nuts and diameter of washer face shall be within the limits of the maximum width across flats and 95% of the minimum width across flats.

The tops of washer faced nuts shall be flat and the diameter of chamfer circle shall be equal to the maximum width across flats within a tolerance of −15%. The length of chamfer at hex corners shall be 5% to 15% of the basic thread diameter. The surface of chamfer may be slightly convex or rounded.

Bearing surfaces shall be flat and, unless otherwise specified, shall be perpendicular to the axis of the threaded hole within the total runout (FIM) tabulated for the respective nut size, type, and strength level.

(3) **True Position of Tapped Hole.** At maximum material condition, the axis of nut body shall be located at true position with respect to the axis of the tapped hole within a tolerance zone having a diameter equivalent to 4% of the maximum width across flats for $1^{1}/_{2}$ in. nominal size nuts or smaller.

(4) **Countersink.** Tapped hole shall be countersunk on the bearing face or faces. The maximum countersink diameter shall be 1.08 times the thread basic (nominal) major diameter. No part of the threaded portion shall project beyond the bearing surface.

(5) **Corner Fill.** A rounding or lack of fill at junction of hex corners with chamfer shall be permissible provided the width across corners is within specified limits at and beyond a distance equal to 17.5% of the basic thread diameter from the chamfered faces.

(6) **Width Across Flats.** Maximum width across flats shall not be exceeded (see exception in para. 3.1, Width Across Flats). No transverse section through the nut between 25% and 75% of the actual nut thickness, as measured from the bearing surface, shall be less than the minimum width across flats. For milled-from-bar nuts, see statement in para. 3.1, Width Across Flats, pertaining to the nominal bar size to be used.

(7) **Threads.** Threads shall be UNC or 8 UN Class 2B in accordance with ASME B1.1, Unified Inch Screw Threads. When specified, 8 thread series may be used on nuts over 1 in. in diameter.

(8) **Dimensional Conformance.** Heavy hex nuts shall have the following characteristics inspected to ASME B18.18.2M to the inspection levels shown:

Characteristic	Inspection Level
Width across corners	C
Thickness	B
Visual	C

If verifiable in-process inspection is used, see para. 3.10.

Copyright ASME International
Provided by IHS under license with ASME
No reproduction or networking permitted without license from IHS
Not for Resale

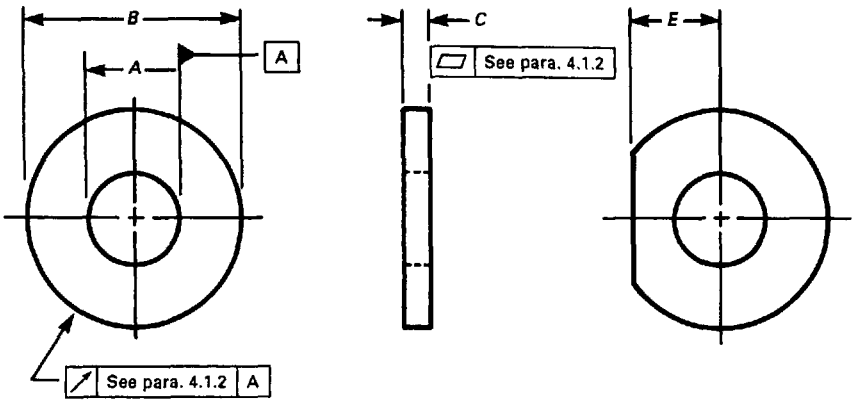

Circular Clipped Circular

TABLE 3 DIMENSIONS FOR HARDENED STEEL CIRCULAR AND CIRCULAR CLIPPED WASHERS

Bolt Size or Nominal Washer Size, In. [Note (2)]	Inside Diameter *A*			Outside Diameter *B*			Thickness *C*		Minimum Edge Distance *E*
	Basic	Tolerance			Tolerance				
	Washer	Plus	Minus	Basic	Plus	Minus	Min.	Max.	
1/2	0.531	0.0313	0	1.063	0.0313	0.0313	0.097	0.177	0.438
5/8	0.688	0.0313	0	1.313	0.0313	0.0313	0.122	0.177	0.547
3/4	0.813	0.0313	0	1.469	0.0313	0.0313	0.122	0.177	0.656
7/8	0.938	0.0313	0	1.750	0.0313	0.0313	0.136	0.177	0.766
1	1.125	0.0313	0	2.000	0.0313	0.0313	0.136	0.177	0.875
1 1/8	1.250	0.0313	0	2.250	0.0313	0.0313	0.136	0.177	0.984
1 1/4	1.375	0.0313	0	2.500	0.0313	0.0313	0.136	0.177	1.094
1 3/8	1.500	0.0313	0	2.750	0.0313	0.0313	0.136	0.177	1.203
1 1/2	1.625	0.0313	0	3.000	0.0313	0.0313	0.136	0.177	1.313

GENERAL NOTES:

(1) *Dimensional Conformance.* Circular and circular clipped washers shall have the following characteristics inspected to ASME B18.18.2M to the inspection levels shown:

Characteristic	Inspection Level
Inside diameter	B
Visual	C

If verifiable in-process inspection is used, see para. 4.1.9.

(2) Nominal washer sizes are intended for use with comparable nominal bolt diameters.

(3) Additonal requirements are in para. 4.2.

Copyright ASME International
Provided by IHS under license with ASME
No reproduction or networking permitted without license from IHS Not for Resale

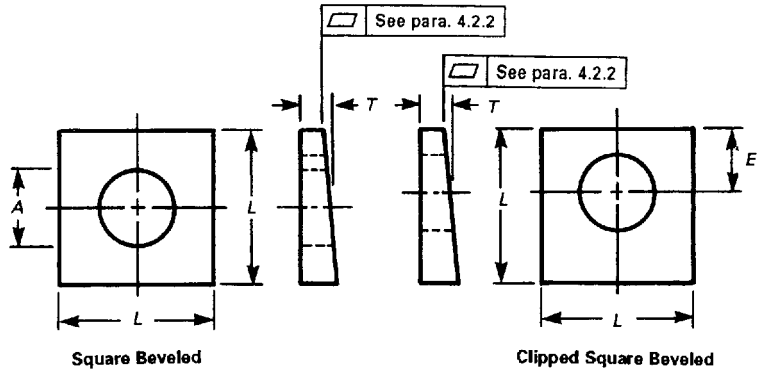

TABLE 4 DIMENSIONS OF HARDENED BEVELED WASHERS WITH SLOPE OR TAPER IN THICKNESS 1:6

Nominal Washer Size [Note (3)]		Inside Diameter *A*			Minimum Side Length *L*	Thickness *T*	Minimum Edge Distance *E*
			Tolerance				
		Basic	Plus	Minus			
1/2	0.500	0.531	0.0313	0	1.750	0.313	0.438
5/8	0.625	0.688	0.0313	0	1.750	0.313	0.547
3/4	0.750	0.813	0.0313	0	1.750	0.313	0.656
7/8	0.875	0.938	0.0313	0	1.750	0.313	0.766
1	1.000	1.125	0.0313	0	1.750	0.313	0.875
1 1/8	1.125	1.250	0.0313	0	2.250	0.313	0.984
1 1/4	1.250	1.375	0.0313	0	2.250	0.313	1.094
1 3/8	1.375	1.500	0.0313	0	2.250	0.313	1.203
1 1/2	1.500	1.625	0.0313	0	2.250	0.313	1.313

GENERAL NOTES:

(1) *Dimensional Conformance.* Beveled washers shall have the following characteristics inspected to ASME B18.18.2M to the inspection levels shown:

Characteristic	Inspection Level
Inside diameter	B
Visual	C

If verifiable in-process inspection is used, see para. 4.2.9.

(2) Nonclipped washers may be rectangular providing neither side dimension is less than *L*.

(3) Nominal washer sizes are intended for use with comparable nominal bolt diameters.

(4) Additional requirements are in para. 4.2.

Copyright ASME International
Provided by IHS under license with ASME
No reproduction or networking permitted without license from IHS
Not for Resale

Copyright ASME International
Provided by IHS under license with ASME
No reproduction or networking permitted without license from IHS

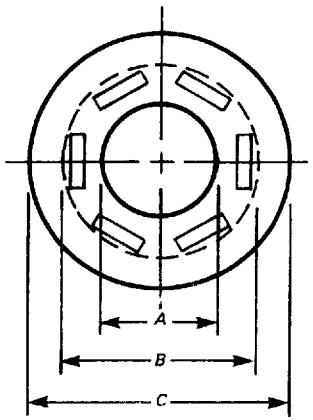

TABLE 5 DIMENSIONS FOR COMPRESSIBLE WASHER-TYPE DIRECT TENSION INDICATORS

	All Types			Type A 325					Type A 490				
	Inside Diameter, in. *A*		Protrusion Tangential Diameter, in. *B*	Outside Diameter, in. *C*		Number of Protrusions (Equally Spaced)	Thickness, in.		Outside Diameter, in. C		Number of Protrusions (Equally Spaced)	Thickness, in.	
Bolt Size, in.	Min.	Max.	Max.	Min.	Max.		Without Protrusion Min.	With Protrusion Max.	Min.	Max.		Without Protrusion Min.	With Protrusion Max.
1/2	0.523	0.527	0.788	1.167	1.187	4	0.104	0.180	1.355	1.375	5	0.104	0.180
5/8	0.654	0.658	0.956	1.355	1.375	4	0.126	0.220	1.605	1.625	5	0.126	0.220
3/4	0.786	0.790	1.125	1.605	1.825	5	0.126	0.230	1.730	1.750	6	0.142	0.240
7/8	0.917	0.921	1.294	1.855	1.875	5	0.142	0.240	1.980	2.000	6	0.158	0.260
1	1.048	1.052	1.463	1.980	2.000	6	0.158	0.270	2.230	2.250	7	0.158	0.270
1 1/8	1.179	1.183	1.631	2.230	2.250	6	0.158	0.270	2.480	2.500	7	0.158	0.280
1 1/4	1.311	1.315	1.800	2.480	2.600	7	0.158	0.270	2.730	2.750	8	0.158	0.280
1 3/8	1.442	1.446	1.969	2.730	2.750	7	0.158	0.270	2.980	3.000	8	0.158	0.280
1 1/2	1.573	1.577	2.138	2.980	3.000	8	0.158	0.270	3.230	3.260	9	0.158	0.280

GENERAL NOTES:

(1) *Dimensional Conformance.* Direct tension indicators shall have the following characteristics inspected to ASME B18.18.2M to the inspection levels shown:

Characteristic	Inspection Level
Inside diameter	B
Protrusion tangential diameter	B
Visual	C

If verifiable in-process inspection is used, see para. 5.8.

(2) Additional requirements are in Section 5.

Not for Resale

AMERICAN NATIONAL STANDARDS FOR BOLTS, NUTS, RIVETS, SCREWS, WASHERS, AND SIMILAR FASTENERS

Small Solid Rivets ..... B18.1.1-1972(R1995)
Large Rivets ..... B18.1.2-1972(R1995)
Metric Small Solid Rivets ..... B18.1.3M-1983(R1995)
Square and Hex Bolts and Screws (Inch Series) B18.2.1-1996
Square and Hex Nuts (Inch Series) ..... B18.2.2-1987(R1993)
Metric Hex Cap Screws ..... B18.2.3.1M-1979(R1995)
Metric Formed Hex Screws ..... B18.2.3.2M-1979(R1995)
Metric Heavy Hex Screws ..... B18.2.3.3M-1979(R1995)
Metric Hex Flange Screws ..... B18.2.3.4M-1984(R1995)
Metric Hex Bolts ..... B18.2.3.5M-1979(R1995)
Metric Heavy Hex Bolts ..... B18.2.3.6M-1979(R1995)
Metric Heavy Hex Structural Bolts ..... B18.2.3.7M-1979(R1995)
Metric Hex Lag Screws ..... B18.2.3.8M-1981(R1991)
letric Heavy Hex Flange Screws ..... B18.2.3.9M-1984(R1995)
quare Head Bolts (Metric Series) B18.2.3.10M-1996
Metric Hex Nuts, Style 1 ..... B18.2.4.1M-1996
Metric Hex Nuts, Style 2 ..... B18.2.4.2M-1979(R1995)
Metric Slotted Hex Nuts ..... B18.2.4.3M-1979(R1995)
Metric Hex Flange Nuts ..... B18.4.4.4M-1982(R1993)
Metric Hex Jam Nuts ..... B18.2.4.5M-1979(R1990)
Metric Heavy Hex Nuts ..... B18.2.4.6M-1979(R1990)
Fasteners for Use in Structural Applications B18.2.6-1996
Socket Cap, Shoulder and Set Screws — Inch Series ..... B18.3-1986(R1995)
Socket Head Cap Screws (Metric Series) ..... B18.3.1M-1986(R1993)
Metric Series Hexagon Keys and Bits ..... B18.3.2M-1979(R1990)
Hexagon Socket Head Shoulder Screws (Metric Series) ..... B18.3.3M-1986(R1993)
Hexagon Socket Button Head Cap Screws (Metric Series) ..... B18.3.4M-1986(R1993)
Hexagon Socket Flat Countersunk Head Cap Screws (Metric Series) ..... B18.3.5M-1986(R1993)
etric Series Socket Set Screws ..... B18.3.6M-1986(R1993)
ound Head Bolts (Inch Series) B18.5-1990
metric Round Head Short Square Neck Bolts B18.5.2.1M-1996
Metric Round Head Square Neck Bolts B18.5.2.2M-1982
Round Head Square Neck Bolts With Large Head (Metric Series) B18.5.2.3M-1990
Wood Screws (Inch Series) ..... B18.6.1-1981(R1991)
Slotted Head Cap Screws, Square Head Set Screws, and Slotted Headless Set Screws ..... B18.6.2-1972(R1993)
Machine Screws and Machine Screw Nuts ..... B18.6.3-1972(R1983)
Thread Forming and Thread Cutting Tapping Screws and
Metallic Drive Screws (Inch Series) ..... B18.6.4-1981(R1991)
Metric Thread Forming and Thread Cutting Tapping Screws ..... B18.6.5M-1986(R1993)
Metric Machine Screws ..... B18.6.7M-1985(R1993)
General Purpose Semi-Tubular Rivets, Full Tubular Rivets, Split Rivets
and Rivet Caps ..... B18.7-1972(R1992)
Metric General Purpose Semi-Tubular Rivets ..... B18.7.1M-1984(R1992)
Clevis Pins and Cotter Pins (Inch Series) B18.8.1-1994
iper Pins, Dowel Pins, Straight Pins, Grooved Pins, and Spring Pins (Inch Series) B18.8.2-1995
oring Pins — Coiled Type (Metric Series) B18.8.3M-1995
Spring Pins — Slotted (Metric Series) B18.8.4M-1994
Machine Dowel Pins — Hardened Ground (Metric Series) B18.8.5M-1994
Cotter Pins (Metric Series) B18.8.6M-1995
Headless Clevis Pins (Metric Series) B18.8.7M-1994
Headed Clevis Pins (Metric Series) B18.8.8M-1994
Plow Bolts (Inch Series) B18.9-1996
Track Bolts and Nuts ..... B18.10-1982(R1992)
Miniature Screws ..... B18.11-1961(R1992)
Glossary of Terms for Mechanical Fasteners ..... B18.12-1962(R1991)
Screw and Washer Assemblies — Sems (Inch Series) ..... B18.13-1987(R1993)
Screw and Washer Assemblies — Sems (Metric Series) B18.13.1M-1991
Forged Eyebolts ..... B18.15-1985(R1995)
Mechanical and Performance Requirements for Prevailing-Torque Type
Steel Metric Hex Nuts and Hex Flange Nuts ..... B18.16.1M-1979(R1995)
rque-Tension Test Requirements for Prevailing-Torque Type
Steel Metric Hex Nuts and Hex Flange Nuts ..... B18.16.2M-1979(R1995)

Copyright ASME International
Provided by IHS under license with ASME
No reproduction or networking permitted without license from IHS
Not for Resale

Dimensional Requirements for Prevailing-Torque Type Steel
Metric Hex Nuts and Hex Flange Nuts ..... B18.16.3M-1982(R1993)
Wing Nuts, Thumb Screws, and Wing Screws ..... B18.17-1968(R1983)
Inspection and Quality Assurance for General Purpose Fasteners ..... B18.18.1M-1987(R1993)
Inspection and Quality Assurance for High-Volume Machine Assembly Fasteners ..... B18.18.2M-1987(R1993)
Inspection and Quality Assurance for Special Purpose Fasteners ..... B18.18.3M-1987(R1993)
Inspection and Quality Assurance for Fasteners for Highly Specialized
Engineered Applications ..... B18.18.4M-1987(R1993)
Lock Washers (Inch Series) B18.21.1-1994
Lock Washers (Metric Series) B18.21.2M-1994
Metric Plain Washers ..... B18.22M-1981(R1990)
Plain Washers ..... B18.22.1-1965(R1990)
Part Identifying Number (Pin) Code System Standard for B18 Externally
Threaded Products B18.24.1-1996
Square and Rectangular Keys and Keyways B18.25.1M-1996
Woodruff Keys and Keyways B18.25.2M-1996
Helical Coil Screw Thread Inserts (Inch Series) B18.29.1-1993

The ASME Publications Catalog shows a complete list of all the Standards published by the Society. For a complimentary catalog, or the latest information about our publications, call 1-800-THE-ASME (1-800-843-2763).

Copyright ASME International
Provided by IHS under license with ASME
No reproduction or networking permitted without license from IHS
Not for Resale