ASME B18.2.3.9M-2001

[Revision of ANSI/ASME B18.2.3.9M-1984 (R1995)]

METRIC HEAVY HEX FLANGE SCREWS

AN AMERICAN NATIONAL STANDARD

The American Society of Mechanical Engineers

Copyright ASME International
Provided by IHS under license with ASME
No reproduction or networking permitted without license from IHS

Not for Resale



The American Society of Mechanical Engineers

AN AMERICAN NATIONAL STANDARD

METRIC HEAVY HEX FLANGE SCREWS

ASME B18.2.3.9M-2001

[Revision of ANSI/ASME B18.2.3.9M-1984 (R1995)]

Copyright ASME International
Provided by IHS under license with ASME
No reproduction or networking permitted without license from IHS
Not for Resale

Date of Issuance: September 17, 2001

This Standard will be revised when the Society approves the issuance of a new edition. There will be no addenda issued to this edition.

ASME will issue written replies to inquiries concerning interpretations of technical aspects of this Standard.

ASME is the registered trademark of The American Society of Mechanical Engineers.

This code or standard was developed under procedures accredited as meeting the criteria for American National Standards. The Standards Committee that approved the code or standard was balanced to assure that individuals from competent and concerned interests have had an opportunity to participate. The proposed code or standard was made available for public review and comment that provides an opportunity for additional public input from industry, academia, regulatory agencies, and the public-at-large.

ASME does not "approve," "rate," or "endorse" any item, construction, proprietary device, or activity.

ASME does not take any position with respect to the validity of any patent rights asserted in connection with any items mentioned in this document, and does not undertake to insure anyone utilizing a standard against liability for infringement of any applicable letters patent, nor assume any such liability. Users of a code or standard are expressly advised that determination of the validity of any such patent rights, and the risk of infringement of such rights, is entirely their own responsibility.

Participation by federal agency representative(s) or person(s) affiliated with industry is not to be interpreted as government or industry endorsement of this code or standard.

ASME accepts responsibility for only those interpretations of this document issued in accordance with the established ASME procedures and policies, which precludes the issuance of interpretations by individuals.

No part of this document may be reproduced in any form,
in an electronic retrieval system or otherwise,
without the prior written permission of the publisher.

The American Society of Mechanical Engineers
Three Park Avenue, New York, NY 10016-5990

Copyright © 2001 by
THE AMERICAN SOCIETY OF MECHANICAL ENGINEERS
All Rights Reserved
Printed in U.S.A.

Copyright ASME International
Provided by IHS under license with ASME
No reproduction or networking permitted without license from IHS
Not for Resale

FOREWORD

American National Standards Committee B18 for the standardization of bolts, screws, nuts, rivets, and similar fasteners was organized in March 1922 as Sectional Committee B18 under the aegis of the American Engineering Standards Committee (later the American Standards Association, then the United States of America Standards Institute and, as of October 6, 1969, the American National Standards Institute, Inc.), with the Society of Automotive Engineers and the American Society of Mechanical Engineers as joint sponsors. Subcommittee 2 was subsequently established and charged with the responsibility for technical content of standards covering wrench head bolts and nuts.

At its meeting on December 4, 1974, Committee B18 authorized preparation of a series of standards for metric fasteners. Subcommittee 2 was assigned responsibility for developing standards for metric hex bolts, screws, and nuts.

Following issuance of ANSI B18.2.3.4M-1979, interest developed in the farm equipment, heavy truck, and off-road vehicles industries for a second series of metric hex flange screws having a head widths across flats series equal to those of metric hex cap screws. During the analytical research study to optimize head proportions of hex flange screws (refer to the Foreword of ASME B18.2.3.4M-2000), this larger head series was also investigated, and appropriate values for the various head characteristics were established for screw sizes M10 through M20.

This new design of metric heavy hex flange screws was submitted by the United States of America/Canada to ISO/TC2 at its May 1982 meetings. TC2 accepted the proposal and authorized development of International Organization for Standardization (ISO) standards.

After these ISO decisions, Subcommittee 2 drafted this Standard.

This Standard was approved by letter ballot of the ASME B18 Standards Committee on April 18, 1983, and was subsequently approved by the American Society of Mechanical Engineers and submitted to the American National Standards Institute for designation as an American National Standard. This was granted on March 23, 1984. The Standard was reaffirmed in 1995. This draft revision was prepared based on revisions that were made in the metric hex cap screw standard in December 1998. This Standard was approved by the American National Standards Institute on March 9, 2001. The key revisions include the following:

(a) The heavy hex series is expanded to include sizes M5, M6, and M8 with head dimensions adopted by ISO/DIS 8102.

(b) All head heights *(K)* and wrenching heights *(K_w)* are increased to improve wrenchability.

(c) The position of head-to-shank is changed to maximum material condition (MMC) as described in para. 11 and Tables 2 and 5.

(d) The length tolerances are changed in Table 7 to agree with those of the draft of ASME B18.2.3.4M, Metric Hex Flange Screws.

(e) Straightness is specified at MMC, and a rail gage replaces the sleeve gage as specified in para. 18.

(f) The concavity angle of the conical bearing surface is now 0.75 deg ±0.50 deg to agree with that of ISO and to match B18.2.3.4M. The bearing face runout is to be measured on the actual bearing circle instead of the minimum bearing circle as specified in para. 13.

(g) The transition threads shall have a rounded root contour per para. 20.4. This replaces,

--`,`-`-`,,`,,`,`,,`---

Copyright ASME International
Provided by IHS under license with ASME
No reproduction or networking permitted without license from IHS
Not for Resale

"For screws of Property Class 10.9 and higher strength materials (tensile strength 1040 MPa and higher) the transition threads shall have a rounded root contour no radius of which shall be less than the specified minimum at the root of the full form thread."

(h) The position of body-to-thread previously required is deleted based on the B18 Subcommittee 2 decision of December 2, 1998.

(i) Appendix A is added to provide a detailed comparison with ISO/DIS 8102, with unpublished changes agreed upon in ISO/TC2/WG2. The current wrenching height formula in ISO 4759-1 would increase the wrenching heights even more. No support exists in North America for increases beyond those included herein.

--`-`-`,,`,,`,`,,`---

Copyright ASME International
Provided by IHS under license with ASME
No reproduction or networking permitted without license from IHS
Not for Resale

ASME B18 STANDARDS COMMITTEE
Standardization of Bolts, Nuts, Rivets, Screws, Washers, and Similar Fasteners

(The following is the roster of the Committee at the time of approval of this Standard.)

OFFICERS

D. A. Clever, *Chair*
R. D. Strong, *Vice Chair*
S. W. Vass, *Vice Chair*
R. L. Crane, *Secretary*

COMMITTEE PERSONNEL

J. Altman, Rotor Clip Co.
J. H. Slass, *Alternate,* Rotor Clip Co.
J. B. Belford, Lawson Products, Inc.
J. A. Buda, SPS Technologies
R. M. Byrne, Trade Association Management, Inc.
D. A. Clever, Deere and Co.
A. P. Cockman, Ford Motor Co.
T. Collier, Cam-Tech Industries, Inc.
R. L. Crane, The American Society of Mechanical Engineers
A. C. DiCola, Wrought Washer Co.
B. A. Dusina, Federal Screw Works
D. S. George, Ford Motor Co.
D. L. Drobnich, *Alternate,* Ford Motor Co.
J. Greenslade, Greenslade and Co.
B. Hasiuk, Defense Industrial Supply Center
A. Herskovitz, U.S. Army
J. Hubbard, Rockford Fastener, Inc.
D. F. Kattler, SPS Technologies
J. F. Koehl, Spirol International Corp.
W. H. Kopke, ITW Shakeproof Assembly Co.
M. Levinson, *Alternate,* ITW Shakeproof Assembly Co.
J. G. Langenstein, Consultant
D. Liesche, Defense Industrial Supply Center
L. L. Lord, Caterpillar, Inc.
R. L. Tennis, *Alternate,* Caterpillar, Inc.
D. B. Mantas, GE—Empis
A. D. McCrindle, Genfast Manufacturing Co.
K. E. McCullough, Consultant
R. B. Meade, Textron Fastening Systems
M. D. Prasad, General Motors Corp.
S. Savoji, ITW Medalist
W. Schevey, BGM Fastener Co., Inc.
R. D. Strong, General Motors Corp.
J. F. Sullivan, National Fasteners Distribution Association
R. Torres, Action Threaded Production
S. W. Vass, Industrial Fasteners Institute
C. B. Wackrow, MNP Corp.
R. G. Weber, Fairfield University

Copyright ASME International
Provided by IHS under license with ASME
No reproduction or networking permitted without license from IHS
Not for Resale

W. K. Wilcox, Naval Sea Systems
C. J. Wilson, Industrial Fasteners Institute
D. R. Akers, *Alternate,* Industrial Fasteners Institute
R. B. Wright, Wright Tool Co.
J. G. Zeratsky, Tubular and Machine Institute

SUBCOMMITTEE 2 — EXTERNALLY DRIVEN FASTENERS

S. W. Vass, *Chair,* Lake Erie Screw Corp./Industrial Fasteners Institute
R. L. Crane, *Secretary,* The American Society of Mechanical Engineers
H. S. Brenner, Almay Research and Testing
R. M. Byrne, Trade Association Management, Inc.
M. M. Chu, Nucor Fastener
D. A. Clever, Deere and Co.
A. P. Cockman, Ford Motor Co.
R. J. Corbett, Huck International
E. R. Cossairt, Hill Fastener Corp.
D. L. Drobnich, Ford Motor Co.
B. A. Dusina, Federal Screw Works
D. S. George, Ford Motor Co.
J. Greenslade, Greenslade and Co.
A. Herskovitz, Consultant
M. W. Holubecki, Electric Boat Corp.
J. Hubbard, Rockford Fastener, Inc.
D. F. Kattler, SPS Technologies
D. Liesche, Defense Industrial Supply Center
L. L. Lord, Caterpillar, Inc.
D. B. Mantas, GE—Empis
A. D. McCrindle, Genfast Manufacturing Co.
K. E. McCullough, Consultant
R. B. Meade, Textron Fastening Systems
S. Savoji, ITW Medalist
J. A. Schlink, Caterpillar, Inc.
D. F. Sharp, Turnasure LLC
W. R. Stevens, MacLean–Fogg Fastening
R. D. Strong, General Motors Corp.
J. F. Sullivan, National Fasteners Distribution Association
D. M. Sutula, Industrial Fasteners Institute
R. L. Tennis, Caterpillar, Inc.
R. Torres, Action Threaded Products
C. B. Wackrow, MNP Corp.
W. L. Wilcox, Naval Sea Systems
C. J. Wilson, Industrial Fasteners Institute

Copyright ASME International
Provided by IHS under license with ASME
No reproduction or networking permitted without license from IHS
Not for Resale

CORRESPONDENCE WITH B18 COMMITTEE

General. ASME Standards are developed and maintained with the intent to represent the consensus of concerned interests. As such, users of this Standard may interact with the Committee by requesting interpretations, proposing revisions, and attending Committee meetings. Correspondence should be addressed to:

Secretary, B18 Standards Committee
The American Society of Mechanical Engineers
Three Park Avenue
New York, NY 10016-5990

Proposing Revisions. Revisions are made periodically to the Standard to incorporate changes that appear necessary or desirable, as demonstrated by the experience gained from the application of the Standard. Approved revisions will be published periodically.

The Committee welcomes proposals for revisions to this Standard. Such proposals should be as specific as possible, citing the paragraph number(s), the proposed wording, and a detailed description of the reasons for the proposal, including any pertinent documentation.

Interpretations. Upon request, the B18 Committee will render an interpretation of any requirement of the Standard. Interpretations can only be rendered in response to a written request sent to the Secretary of the B18 Standards Committee.

The request for interpretation should be clear and unambiguous. It is further recommended that the inquirer submit his/her request in the following format:

Subject: Cite the applicable paragraph number(s) and the topic of the inquiry.

Edition: Cite the applicable edition of the Standard for which the interpretation is being requested.

Question: Phrase the question as a request for an interpretation of a specific requirement suitable for general understanding and use, not as a request for an approval of a proprietary design or situation. The inquirer may also include any plans or drawings which are necessary to explain the question; however, they should not contain proprietary names or information.

Requests that are not in this format will be rewritten in this format by the Committee prior to being answered, which may inadvertently change the intent of the original request.

ASME procedures provide for reconsideration of any interpretation when or if additional information that might affect an interpretation is available. Further, persons aggrieved by an interpretation may appeal to the cognizant ASME Committee or Subcommittee. ASME does not “approve,” “certify,” “rate,” or “endorse” any item, construction, proprietary device, or activity.

Attending Committee Meetings. The B18 Standards Committee regularly holds meetings, which are open to the public. Persons wishing to attend any meeting should contact the Secretary of the B18 Standards Committee.

Copyright ASME International
Provided by IHS under license with ASME
No reproduction or networking permitted without license from IHS
Not for Resale

CONTENTS

Foreword iii
Standards Committee Roster v
Correspondence With the B18 Committee vii

1 Scope 1
2 Comparison With ISO/DIS 8102 1
3 Referenced Standards 1
4 Terminology 2
5 Dimensions 2
6 Top of Head 2
7 Head Height 2
8 Wrenching Height 2
9 Corner Fill 2
10 Gaging of Heavy Hex Flange Head 2
11 Position of Head 2
12 Flange 2
13 Bearing Surface 2
14 Fillet 3
15 Body Diameter 3
16 Length 4
17 Points 4
18 Straightness 5
19 Threads 5
20 Thread Length 7
21 Materials and Mechanical Properties 9
22 Identification Symbols 9
23 Finish 10
24 Workmanship 10
25 Inspection and Quality Assurance 10
26 Dimensional Conformance 10

Copyright ASME International
Provided by IHS under license with ASME
No reproduction or networking permitted without license from IHS
Not for Resale

27 Clearance Holes 10

28 Designation 10

Tables

1 Gaging of Heavy Hex Flange Heads 3
2 Tolerance Zones 3
3 Dimensions of Type F Underhead Fillets 4
4 Dimensions of Type U Underhead Fillets 5
5 Dimensions of Heavy Hex Flange Screws 6
6 Dimensions of Reduced Body Diameter (Type R) 7
7 Length Tolerances 7
8 Dimensions of Points 7
9 Maximum Grip Gaging Lengths, L_g, and Minimum Body Lengths, L_s 8
10 Thread Lengths 9

Nonmandatory Appendices

A Comparison With ISO Standards 11
B Screw Straightness Gage and Gaging Procedure 13

--`,`-`-`,,`,,`,`,,`---

Copyright ASME International
Provided by IHS under license with ASME
No reproduction or networking permitted without license from IHS

Not for Resale

Copyright ASME International
Provided by IHS under license with ASME
No reproduction or networking permitted without license from IHS
Not for Resale

METRIC HEAVY HEX FLANGE SCREWS

1 SCOPE

(a) This Standard covers the complete dimensional and general data for metric series heavy hex flange screws recognized as American National Standard.

(b) The inclusion of dimensional data in this Standard is not intended to imply that all products described are stock production items. Consumers should consult with suppliers concerning availability of products.

2 COMPARISON WITH ISO/DIS 8102

(a) Heavy hex flange screws as presented in this standard are harmonized to the extent possible with the draft international standard ISO/DIS 8102, Hexagon Bolts With Flange—Heavy Series, and with revisions agreed to by ISO/TC2/WG2 in May 1989 in Zurich and later that have not been published in a revised draft. If it were published, the dimensional differences between this Standard and ISO/DIS 8102 would be few, relatively minor, and none would affect functional interchangeability of screws manufactured to the requirements of either.

This Standard specifies some requirements that are not included in ISO/DIS 8102. **Dimensional requirements shown in bold type are in addition to, or differ from, ISO/DIS 8102.** The technical differences between this standard and the ISO documents are described in Appendix A.

(b) Letter symbols designating dimensional characteristics are in accord with ISO 225, Fasteners—Bolts, Screws, Studs and Nuts—Symbols and Designations of Dimensions, and with ISO/DIS 8102, except where capitals have been used instead of lowercase letters used in the ISO standards.

3 REFERENCED STANDARDS

The following is a list of publications referenced in this Standard. Unless otherwise specified, the standard(s) referenced shall be the most recent issue at the time of order placement.

ASME B1.3M Screw Thread Gaging Systems for Dimensional Acceptability—Inch and Metric Threads (UN, UNR, UNJ, M, and MJ)

ASME B1.13M Metric Screw Threads—M Profile

ASME B18.2.8 Clearance Holes for Inch and Metric Bolts and Screws

ASME B18.12 Glossary of Terms for Mechanical Fasteners

ASME B18.18.1M Inspection and Quality Assurance for General Purpose Fasteners

ASME B18.18.2M Inspection and Quality Assurance for High-Volume Machine Assembly Fasteners

ASME B18.24.1 Part Identifying Number (PIN) Code System Standard for B18 Externally Threaded Fasteners

ASME Y14.5M Dimensioning and Tolerancing

Publisher: American Society of Mechanical Engineers (ASME International), Three Park Avenue, New York, NY 10016-5990; Order Department: 22 Law Drive, Box 2300, Fairfield, NJ 07007

ASTM F 468M Nonferrous Bolts, Hex Cap Screws, and Stands for General Use (Metric)

ASTM F 568M Carbon and Alloy Steel Externally Threaded Metric Fasteners

ASTM F 738M Stainless Steel Metric Bolts, Screws, and Studs

ASTM F 788/F 788M Surface Discontinuities of Bolts, Screws and Studs, Inch and Metric Series

Publisher: American Society for Testing and Materials (ASTM), 100 Barr Harbor Drive, West Conshohocken, PA 19428

ISO 225 Fasteners—Bolts, Screws, Studs and Nuts—Symbols and Designations of Dimensions[1]

ISO 3508 Thread Runouts for Fasteners With Thread in Accordance With ISO 261 and ISO 262[1]

ISO 4759-1 Tolerances for Fasteners—Part 1: Bolts, Screws and Nuts With Thread Diameters 1.6 to 150 mm and Product Grades A, B and C[1]

ISO/DIS 8102 Hexagon Bolts With Flange-Heavy Series[1]

[1] May also be obtained from American National Standards Institute, 11 West 42nd Street, New York, NY 10036.

Copyright ASME International
Provided by IHS under license with ASME
No reproduction or networking permitted without license from IHS
Not for Resale

Publisher: International Organization for Standardization (ISO), 1 rue de Varembé, Case Postale 56, CH-1211, Genève 20, Switzerland/Suisse

SAE J1199 Mechanical and Material Requirements for Metric Externally Threaded Steel Fasteners

Publisher: Society of Automotive Engineers (SAE), 400 Commonwealth Drive, Warrendale, PA 15096

4 TERMINOLOGY

For definitions of terms relating to fasteners or features thereof used in this standard, refer to ASME B18.12.

5 DIMENSIONS

(a) All dimensions in this standard are given in millimeters (mm), and apply before any coating, unless stated otherwise.

(b) Symbols specifying geometric characteristics are in accord with ASME Y14.5M.

6 TOP OF HEAD

The top of head shall be either full form or indented at manufacturer's option, and shall be either chamfered or rounded. The diameter of the chamfer circle or start of rounding shall be equal to the maximum width across flats, S maximum, within a tolerance of −15%. If the top of the head is indented, the periphery may be rounded.

7 HEAD HEIGHT

The head height, K, is the distance, parallel to the axis of the screw, from the plane of the bearing circle to the top of the head, not including any raised markings. See para. 22.

8 WRENCHING HEIGHT

The wrenching height, K_w, is the distance at a corner of the hexagon from the junction of hex head with the flange to the last plane of full-formed hexagon (i.e., the plane closest to the top of the head at which the width across corners, E, of the hexagon is within its specified limits).

9 CORNER FILL

The rounding due to lack of fill at the six corners of the head shall be reasonably uniform.

10 GAGING OF HEAVY HEX FLANGE HEAD

See Table 1. The head shall be gaged using two ring gages, A and B, to demonstrate the coincidental acceptability of wrenching height, corner fill, and width across corners. Gage A shall be placed over the head and shall seat on the flange. Gage B shall be placed on the top of the head normal to the screw axis. The two gages shall not be in contact.

11 POSITION OF HEAD

At maximum material condition, the axis of the hexagon of the head shall be within a positional tolerance zone of the diameter specified in Table 2 with respect to the axis of the shank over a distance under the head equal to the nominal screw diameter, D. The datum shall be as close to the head as practicable, but within $0.5D$ from the head, and shall be either wholly plain body or wholly the thread pitch diameter, not including the thread runout or the underhead fillet.

12 FLANGE

The top surface of the flange shall be conical or slightly rounded (convex). Radius, R_2, applies both at the corners and at the flats of the hexagon. The contour of edge at flange periphery, between the maximum flange diameter, D_c maximum, and the minimum bearing circle diameter, D_w minimum, shall be optional provided that the minimum flange edge thickness, C minimum, is maintained at the minimum bearing circle diameter, D_w minimum.

13 BEARING SURFACE

The bearing surface shall be conical, 0.75 ±0.50 deg concave from the plane formed by the bearing circle diameter. The plane formed by the bearing circle shall be perpendicular to the axis of the shank, over a length under the head equal to the nominal screw diameter, D, within the circular runout as specified in Table 2. The measurement of bearing face runout shall be made at the actual bearing circle (i.e., at the line of highest points on any radial line, e.g., by use of straight edge anvil). The datum shall be as close to the head as practical, and shall be either wholly plain body or

--`,`-`-`,,`,,`,`,,`---
Copyright ASME International
Provided by IHS under license with ASME
No reproduction or networking permitted without license from IHS
Not for Resale

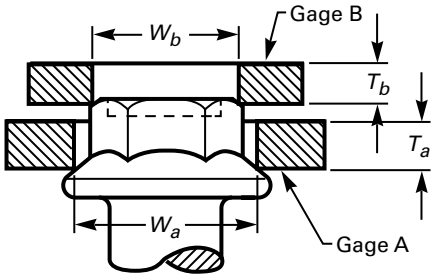

TABLE 1 GAGING OF HEAVY HEX FLANGE HEADS

Nominal Screw Diameter and Thread Pitch	Gage A				Gage B		
	Inside Diameter, W_a		Thickness, T_a		Inside Diameter, W_b		Thickness, T_b
	Max.	Min. [Note (1)]	Max. [Note (2)]	Min.	Max. [Note (3)]	Min.	Min.
M5 × 0.8	9.25	9.24	2.40	2.39	8.55	8.54	3.0
M6 × 1	11.56	11.55	2.70	2.69	10.79	10.78	3.0
M8 × 1.25	15.02	15.01	3.60	3.59	14.07	14.06	4.0
M10 × 1.5	17.33	17.32	4.60	4.59	16.31	16.30	4.0
M12 × 1.75	20.79	20.78	5.20	5.19	19.67	19.66	5.0
M14 × 2	24.26	24.25	6.30	6.29	22.57	22.56	5.0
M16 × 2	27.72	27.71	7.10	7.09	25.93	25.92	6.0
M20 × 2.5	34.65	34.64	8.80	8.79	32.65	32.64	6.0

GENERAL NOTES:
(a) Dimensions are in millimeters.
(b) Refer to para. 10.

NOTES:
(1) W_a min. equals theoretical maximum width across corners, E max.
(2) T_a max. equals minimum wrenching height, K_w min.
(3) W_b max. equals minimum width across corners, E min., –0.01 mm.

TABLE 2 TOLERANCE ZONES

Nominal Screw Diameter and Thread Pitch	Position of Head-to-Shank Tolerance Zone Diameter at MMC	Circular Runout of Bearing Circle to Shank FIM [Note (1)]
M5 × 0.8	0.44	**0.17**
M6 × 1	0.44	**0.21**
M8 × 1.25	0.54	**0.27**
M10 × 1.5	0.54	**0.34**
M12 × 1.75	0.54	**0.42**
M14 × 2	0.66	**0.48**
M16 × 2	0.66	**0.56**
M20 × 2.5	0.66	**0.70**

GENERAL NOTE: Dimensions are in millimeters.

NOTE:
(1) Circular runout of bearing circle to shank is based on 1 deg and the minimum bearing circle diameter, D_w min.

wholly thread pitch diameter, not including the thread runout or the underhead fillet.

14 FILLET

The fillet configuration at the junction of the head and shank shall conform to either Type F, as shown in Table 3, which also specifies limits, or Type U, as shown in Table 4, which also specifies limits, at the option of the manufacturer unless the fillet type is specified by the purchaser. The fillet shall be a smooth and continuous curve fairing smoothly into the underhead bearing surface and the shank within the limits specified. For Type F, no radius in the fillet contour shall be less than R_1 minimum specified in Table 3.

15 BODY DIAMETER

The diameter of the body, D_s, on screws that are not threaded full length shall be within the limits

Copyright ASME International
Provided by IHS under license with ASME
No reproduction or networking permitted without license from IHS
Not for Resale

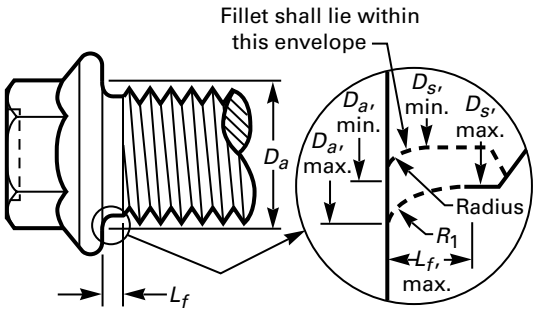

(a) Detail for Short Screws

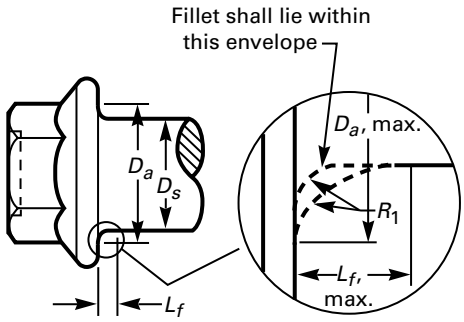

(b) Detail for Long Screws

TABLE 3 DIMENSIONS OF TYPE F UNDERHEAD FILLETS

Nominal Screw Diameter and Thread Pitch	Fillet Transition Diameter, D_a		Body Diameter, D_s [Note (2)]	Fillet Length, L_f		Fillet Radius, R_1
	For Short [Note (1)] and Long Screws	For Short [Note (1)] Screws	For Short [Note (1)] Screws	For Long Screws	For Short [Note (1)] Screws	For Short [Note (1)] and Long Screws
	Max.	Min.	Min.	Max.	Max.	Min.
M5 × 0.8	5.7	**5.1**	**4.36**	1.4	**0.7**	0.2
M6 × 1	6.8	**6.2**	**5.21**	1.6	**0.9**	0.25
M8 × 1.25	9.2	**8.3**	**7.04**	2.1	**1.1**	0.4
M10 × 1.5	11.2	**10.2**	**8.86**	2.1	**1.2**	0.4
M12 × 1.75	13.7	**12.2**	**10.68**	2.1	**1.3**	0.6
M14 × 2	15.7	**14.1**	**12.50**	2.1	**1.4**	0.6
M16 × 2	17.7	**16.5**	**14.50**	3.2	**1.6**	0.6
M20 × 2.5	22.4	**20.7**	**18.16**	4.2	**2.1**	0.8

GENERAL NOTES:
(a) Dimensions are in millimeters.
(b) Type F was formerly named Style A.

NOTES:
(1) Short screws are screws that are threaded full length.
(2) Values of D_s for long screws and D_s max. for short screws are specified in Table 5.

specified in Table 5, unless the purchaser specifies screws with reduced diameter body. For screws threaded full length, the diameter of the unthreaded shank under the head shall neither exceed the maximum body diameter, D_s maximum, specified in Table 5 nor be less than the minimum body diameter, D_s minimum, specified in Table 3 or 4.

Screws of nominal lengths equal to or greater than the shortest nominal lengths specified in Table 6 may be obtained with reduced diameter body, if so specified. Where reduced diameter body (or "Type R") is specified, the body diameter, D_2, shall be within the limits specified in Table 6. The screw shall have a shoulder under the head. The diameter, D_s, and length, L_2, of the shoulder shall be as specified in Table 6.

16 LENGTH

The length of the screw shall be measured parallel to the axis of the screw from the plane formed by the underhead bearing circle to the extreme end of the shank. Tolerances for screw lengths are specified in Table 7.

17 POINTS

The end of the screw shall be chamfered or rounded from a diameter equal to or slightly less than the thread root diameter. The length of the point to the first full-formed thread at major diameter, as determined by the distance the point enters into a cylindrical NOT GO

Copyright ASME International
Provided by IHS under license with ASME
No reproduction or networking permitted without license from IHS
Not for Resale

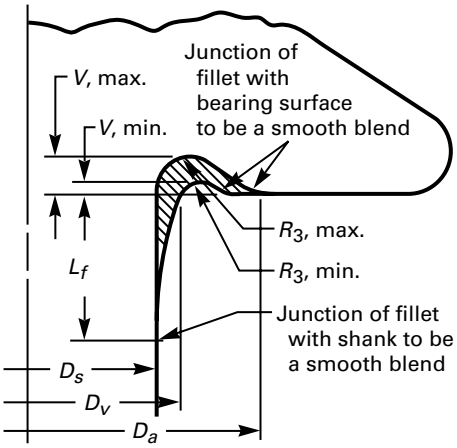

TABLE 4 DIMENSIONS OF TYPE U UNDERHEAD FILLETS

Nominal Screw Diameter and Thread Pitch	Undercut Diameter, D_a [Note (1)]	Fillet Diameter, D_v [Note (2)]	Body Diameter For Short Screws, D_s [Notes (3) and (4)]	Fillet Length, L_f	Undercut Radius, R_3		Undercut Depth, V	
	Max.	Max.	Min.	Max.	Max.	Min.	Max.	Min.
M5 × 0.8	6.2	5.5	**4.36**	1.4	0.25	0.10	0.15	0.05
M6 × 1	7.5	6.6	**5.21**	1.6	0.26	0.11	0.20	0.05
M8 × 1.25	10.0	8.8	**7.04**	2.1	0.36	0.16	0.25	0.10
M10 × 1.5	12.5	10.8	**8.86**	2.1	0.45	0.20	0.30	0.15
M12 × 1.75	15.2	12.8	**10.68**	2.1	0.54	0.24	0.35	0.15
M14 × 2	17.7	14.8	**12.50**	2.1	0.63	0.28	0.45	0.20
M16 × 2	20.5	17.2	**14.50**	3.2	0.72	0.32	0.50	0.25
M20 × 2.5	25.7	21.6	**18.16**	4.2	0.90	0.40	0.65	0.30

GENERAL NOTES:
(a) Dimensions are in millimeters.
(b) Type U was formerly named Style B.

NOTES:
(1) D_a was formerly D_u.
(2) D_v was formerly D_a.
(3) Values of D_s for long screws and D_s max. for short screws are specified in Table 5.
(4) Short screws are screws that are threaded full length.

major diameter ring gage, shall not exceed U maximum specified in Table 8. The end of the screw shall be reasonably square with the axis of the screw, and where pointed blanks are used, the slight rim or cup resulting from roll threading shall be permissible. **At the manufacturer's option, the end of the screw may have a rounded point of radius, R_e, as specified in Table 8.**

18 STRAIGHTNESS

At maximum material condition, the derived median line of the screw body and thread major diameter shall be within a straightness tolerance zone of a diameter equal to **0.006 times length, expressed as a two-place decimal.** A gage and gaging procedure for checking screw straightness are given in Appendix B.

19 THREADS

19.1 Thread Series and Tolerance Class

Screw threads shall be standard coarse pitch external metric screw threads with tolerance Class 6g conforming to ASME B1.13M, unless otherwise specified by the

Copyright ASME International
Provided by IHS under license with ASME
No reproduction or networking permitted without license from IHS
Not for Resale

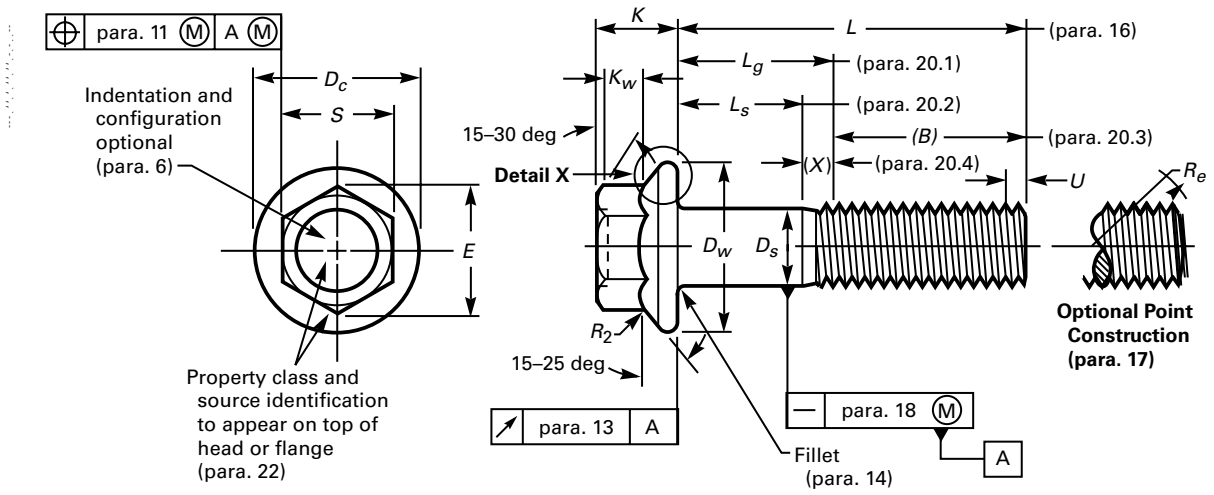

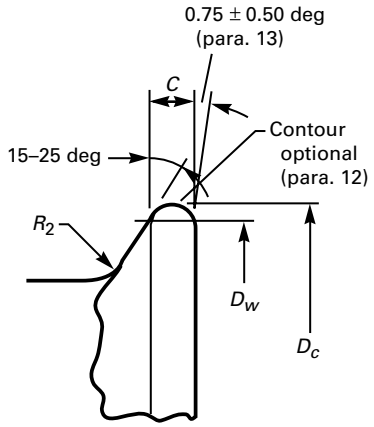

Detail X (paras. 12 and 13)

TABLE 5 DIMENSIONS OF HEAVY HEX FLANGE SCREWS

Nominal Screw Diameter and Thread Pitch	Body Diameter, D_s		Width Across Flats, S		Width Across Corners, E		Flange Diamter, D_c	Bearing Circle Diameter, D_w	Flange Edge Thickness, C	Head Height, K	Wrenching Height, K_w	Flange Top Fillet Radius, R_2
	Max.	Min.	Max.	Min.	Max.	Min.	Max.	Min.	Min.	Max.	Min.	Max.
M5 × 0.8	5.00	4.82	8.00	7.64	9.24	8.56	11.8	9.8	1.0	5.8	2.4	0.3
M6 × 1	6.00	5.82	10.00	9.64	11.55	10.80	14.2	12.2	1.1	6.6	2.7	0.4
M8 × 1.25	8.00	7.78	13.00	12.57	15.01	14.08	18.0	15.8	1.2	8.1	3.6	0.5
M10 × 1.5	10.00	9.78	15.00	14.57	17.32	16.32	22.3	19.6	1.5	10.4	4.6	0.6
M12 × 1.75	12.00	11.73	18.00	17.57	20.78	19.68	26.6	23.8	1.8	11.8	5.2	0.7
M14 × 2	14.00	13.73	21.00	20.16	24.25	22.58	30.5	27.6	2.1	13.7	6.3	0.9
M16 × 2	16.00	15.73	24.00	23.16	27.71	25.94	35.0	31.9	2.4	15.4	7.1	1.0
M20 × 2.5	20.00	19.67	30.00	29.16	34.64	32.66	43.0	39.9	3.0	18.9	8.8	1.2
See para.	15				8, 9, 10		12	12, 13	12	7, 22	8, 9, 10	12

GENERAL NOTE: Dimensions are in millimeters.

Copyright ASME International
Provided by IHS under license with ASME
No reproduction or networking permitted without license from IHS Not for Resale

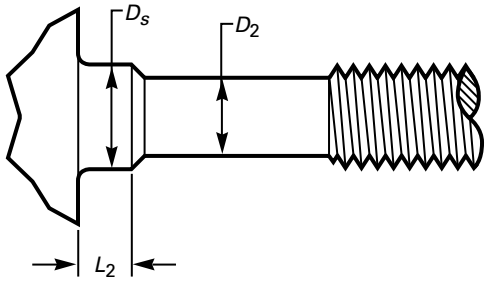

TABLE 6 DIMENSIONS OF REDUCED BODY DIAMETER (TYPE R)

Nominal Screw Diameter and Thread Pitch	Shortest Nominal Screw Length, *L*	Reduced Body Diameter, D_2		Shoulder Diameter, D_s [Note (1)]		Shoulder Length, L_2 [Note (1)]	
		Max.	Min.	Max.	Min.	Max.	Min.
M5 × 0.8	30	**4.54**	**4.36**	5.00	4.82	3.5	2.5
M6 × 1	35	**5.39**	**5.21**	6.00	5.82	4.0	3.0
M8 × 1.25	40	**7.26**	**7.04**	8.00	7.78	5.0	4.0
M10 × 1.5	45	**9.08**	**8.86**	10.00	9.78	6.0	5.0
M12 × 1.75	50	**10.95**	**10.68**	12.00	11.73	7.0	6.0
M14 × 2	55	**12.77**	**12.50**	14.00	13.73	8.0	7.0
M16 × 2	60	**14.77**	**14.50**	16.00	15.73	9.0	8.0
M20 × 2.5	70	**18.49**	**18.16**	20.00	19.67	11.0	10.0

GENERAL NOTE: Dimensions are in millimeters.
NOTE:
(1) Shoulder is mandatory. See para. 15.

TABLE 7 LENGTH TOLERANCES

Nominal Length, mm	Length Tolerance, mm
Over 6 to 10	±0.29
Over 10 to 18	±0.35
Over 18 to 30	±0.42
Over 30 to 50	±0.5
Over 50 to 80	±0.6
Over 80 to 120	±0.7
Over 120 to 180	±0.8
Over 180 to 250	±0.925
Over 250 to 300	±1.05

purchaser. For screws with additive finish, size limits for tolerance Class 6g apply before plating or coating, and the thread profile after coating is subject to acceptance using a 6h GO gage and tolerance Class 6g thread gage for either minimum material, LO or NOT GO.

19.2 Thread Gaging

Unless otherwise specified, dimensional acceptability of screw threads shall be determined based on System 21, ASME B1.3M.

TABLE 8 DIMENSIONS OF POINTS

Nominal Screw Diameter and Thread Pitch	Approximate Point Radius, R_e	Max. Point Length, *U*
M5 × 0.8	7.0	1.60
M6 × 1	8.4	2.00
M8 × 1.25	11.2	2.50
M10 × 1.5	14.0	3.00
M12 × 1.75	16.8	3.50
M14 × 2	19.6	4.00
M16 × 2	22.4	4.00
M20 × 2.5	28.0	5.00

GENERAL NOTES:
(a) Dimensions are in millimeters.
(b) R_e equals 1.4 times the nominal screw diameter, and conforms with ISO 4753.
(c) *U* max. equals two times the thread pitch.

20 THREAD LENGTH

The length of thread on screws is controlled by the maximum grip length, L_g maximum, and the minimum body length, L_s minimum, as set forth in paras. 20.1 through 20.4.

Copyright ASME International
Provided by IHS under license with ASME
No reproduction or networking permitted without license from IHS
Not for Resale

TABLE 9 MAXIMUM GRIP LENGTHS, L_g, AND MINIMUM BODY LENGTHS, L_s

	Nominal Diameter and Thread Pitch															
	M5 × 0.8		M6 × 1		M8 × 1.25		M10 × 1.5		M12 × 1.75		M14 × 2		M16 × 2		M20 × 2.5	
Nominal Length, L	L_g, Max.	L_s, Min.	L_g, Max.	L_s, Min.	L_g, Max.	L_s, Min.	L_g, Max.	L_s, Min.	L_g, Max.	L_s, Min.	L_g, Max.	L_s, Min.	L_g, Max.	L_s, Min.	L_g, Max.	L_s, Min.
8	**1.2**	. . .														
10	2.4	. . .	**1.5**	. . .												
12	2.4	. . .	3.0	. . .	**1.9**	. . .										
16	2.4	. . .	3.0	. . .	4.0	. . .	**2.2**	. . .								
20	2.4	. . .	3.0	. . .	4.0	. . .	4.5	. . .	**2.6**	. . .	**3.0**	. . .				
25	9.0	5.0	3.0	. . .	4.0	. . .	4.5	. . .	5.3	. . .	**3.0**	. . .	**3.0**	. . .		
30	14.0	10.0	12.0	7.0	4.0	. . .	4.5	. . .	5.3	. . .	6.0	. . .	**3.0**	. . .	**3.8**	. . .
35	19.0	15.0	17.0	12.0	13.0	6.75	4.5	. . .	5.3	. . .	6.0	. . .	6.0	. . .	**3.8**	. . .
40	24.0	20.0	22.0	17.0	18.0	11.75	14.0	6.5	5.3	. . .	6.0	. . .	6.0	. . .	7.5	. . .
45	29.0	25.0	27.0	22.0	23.0	16.75	19.0	11.5	15.0	6.25	6.0	. . .	6.0	. . .	7.5	. . .
50	34.0	30.0	32.0	27.0	28.0	21.75	24.0	16.5	20.0	11.25	16.0	6.0	6.0	. . .	7.5	. . .
55			37.0	32.0	33.0	26.75	29.0	21.5	25.0	16.25	21.0	11.0	17.0	7.0	7.5	. . .
60			42.0	37.0	38.0	31.75	34.0	26.5	30.0	21.25	26.0	16.0	22.0	12.0	7.5	. . .
65					43.0	36.75	39.0	31.5	35.0	26.25	31.0	21.0	27.0	17.0	19.0	6.5
70					48.0	41.75	44.0	36.5	40.0	31.25	36.0	26.0	32.0	22.0	24.0	11.5
80					58.0	51.75	54.0	46.5	50.0	41.25	46.0	36.0	42.0	32.0	34.0	21.5
90							64.0	56.5	60.0	51.25	56.0	46.0	52.0	42.0	44.0	31.5
100							74.0	66.5	70.0	61.25	66.0	56.0	62.0	52.0	54.0	41.5
110									80.0	71.25	76.0	66.0	72.0	62.0	64.0	51.5
120									90.0	81.25	86.0	76.0	82.0	72.0	74.0	61.5
130											90.0	80.0	86.0	76.0	78.0	65.5
140											100.0	90.0	96.0	86.0	88.0	75.5
150													106.0	96.0	98.0	85.5
160													116.0	106.0	108.0	95.5
180															128.0	115.5
200															148.0	135.5

GENERAL NOTES:
(a) Dimensions are in millimeters.
(b) Diameter–length combinations between the thin stepped lines are recommended.
(c) Screws with lengths above the solid thick stepped lines are threaded full length. See Table 10.
(d) For screws with longer lengths, L_g and L_s values shall be computed from formulas as given in para. 20.

20.1 Grip Length, L_g

The grip length, L_g, is the distance, measured parallel to the axis of the screw, from the plane of the bearing circle to the face of a noncounterbored, noncountersunk GO thread ring gage assembled by hand as far as the thread will permit. For standard diameter-length combinations of screws, the values for L_g maximum are specified in Table 9. For diameter-length combinations not listed in Table 9, the maximum grip length for long screws that are not threaded full length is equal to the nominal screw length, L, minus the reference thread length, *(B)*, as specified in Table 10: L_g maximum = L nominal − *(B)*.

For short screws of nominal lengths, L, that are shorter than the lengths specified in Table 10 for screws threaded full length, L_g maximum = A maximum as specified in Table 10.

Copyright ASME International
Provided by IHS under license with ASME
No reproduction or networking permitted without license from IHS Not for Resale

TABLE 10 THREAD LENGTHS

Noninal Screw Diameter and Thread Pitch	Thread Length, (*B*, Ref.)			Transition Thread Length (*X*, Ref.)	Screws Threaded Full Length				
	Screw Length, *L*, ≤125	Screw Length, *L*, >125 and ≤200	Screw Length, *L*, >200		Screw Length, *L*	Unthreaded Length Under Head, *A*	Screw Length, *L*		Unthreaded Length Under Head, *A*
					Under	Max.	At Least	Under	Max.
M5 × 0.8	16	22	35	4.0	10	**1.2**	10	25	2.4
M6 × 1	18	24	37	5.0	12	**1.5**	12	30	3.0
M8 × 1.25	22	28	41	6.25	16	**1.9**	16	35	4.0
M10 × 1.5	26	32	45	7.5	20	**2.2**	20	40	4.5
M12 × 1.75	30	36	49	8.75	24	**2.6**	24	45	5.3
M14 × 2	34	40	53	10.0	28	**3.0**	28	50	6.0
M16 × 2	38	44	57	10.0	32	**3.0**	32	55	6.0
M20 × 2.5	46	52	65	12.5	40	**3.8**	40	65	7.5

GENERAL NOTE: Dimensions are in millimeters.

20.2 Body Length, L_s

Body length, L_s, on long screws that are not threaded full length is the distance, parallel to the axis of the screw, from the plane of the bearing circle to the last scratch of thread or top of the extrusion angle, whichever is closer to the head. For standard diameter-length combinations of screws, the values for L_s minimum are specified in Table 9. For diameter-length combinations not listed in Table 9, the minimum body length on long screws that are not threaded full length is equal to the maximum grip length, as determined above, minus the reference transition thread length, *(X)*, as specified in Table 10: L_s minimum $= L_g$ maximum $-$ *(X)*.

20.3 Thread Length, *(B)*

The thread length, *(B)*, specified in Table 10, is a reference dimension intended for calculation purposes only, and is the distance, parallel to the axis of the screw, from the extreme end of the screw to the last complete (full-form) thread.

20.4 Transition Thread Length, *(X)*

The transition thread length, *(X)*, specified in Table 10, is a reference dimension intended for calculation purposes only. It includes the length of incomplete threads and tolerances on grip length and body length. The transition from full-form thread to incomplete thread shall be smooth and uniform. **The major diameter of the incomplete threads shall not exceed the actual major diameter of the complete (full-form) threads. The transition threads shall have a rounded root contour.**

21 MATERIALS AND MECHANICAL PROPERTIES

21.1 Steel

Unless otherwise specified, steel screws shall conform to the requirements for Property Class 9.8 (8.8 for size M20) or Property Class 10.9 as specified in ASTM F 568M, or SAE J1199.

21.2 Corrosion-Resistant Steels

Unless otherwise specified, corrosion-resistant steel screws shall conform to the requirements of ASTM F 738M.

21.3 Nonferrous Metals

Unless otherwise specified, nonferrous screws shall conform to the requirements of ASTM F 468M.

22 IDENTIFICATION SYMBOLS

Markings shall be raised or recessed on the top of the head **or raised on the top of the flange** unless otherwise specified by the purchaser. Markings shall be legible to the unaided eye with the exception of corrective lenses. **When raised, markings shall project not less than 0.1 mm for M14 and smaller screws, and 0.3 mm for M16 and M20 screws, above the**

Copyright ASME International
Provided by IHS under license with ASME
No reproduction or networking permitted without license from IHS
Not for Resale

top surface of the head or flange; and total head height (head plus markings) shall not exceed the specified maximum head height, *K* maximum, plus 0.1 mm for M5 and M6 screws, 0.2 mm for M8 and M10 screws, 0.3 mm for M12 and M14 screws, and 0.4 mm for M16 and M20 screws.

22.1 Property Class Symbols

Each screw shall be marked in accordance with the requirements of the applicable specification for its material and mechanical properties.

22.2 Source Symbols

Each screw shall be marked to identify its source (manufacturer or private label distributor).

23 FINISH

Unless otherwise specified, screws shall be supplied with a natural (as processed) finish, unplated or uncoated, in a clean condition, and lightly oiled.

24 WORKMANSHIP

Screws shall be free from surface imperfections such as burrs, seams, laps, loose scale, and other surface irregularities that could affect serviceability and shall conform to ASTM F 788/F 788M.

25 INSPECTION AND QUALITY ASSURANCE

Unless otherwise specified, acceptability of screws shall be determined in accordance with ASME B18.18.1M.

26 DIMENSIONAL CONFORMANCE

Products shall conform to the specified dimensions. Unless otherwise specified, the following provisions shall apply for inspection of dimensional characteristics:

(a) Unless otherwise specified, the following designated dimensional characteristics shall be inspected to the inspection levels shown according to ASME B18.18.2M.

Characteristic	Inspection Level
Thread acceptability	C
Body diameter, D_s	C
Gaging of hex flange head	C
Grip length, L_g max.	C
Screw length, L	C
Visual inspection [Note (1)]	C

NOTE:
(1) Visual inspection shall include property class marking, source marking, fillet, and workmanship.

If verifiable in-process inspection is used, inspection sample sizes and reporting shall be in accordance with the applicable ASME, ASTM, or SAE quality system consensus standard.

(b) For nondesignated dimensional characteristics, the provisions of ASME B18.18.1M shall apply. Should a nondesignated dimension be determined to be outside its specified limits, it shall be deemed conforming to this Standard if the user, who is the installer, accepts the dimension, based on form, fit, and function considerations.

27 CLEARANCE HOLES

The recommended sizes of clearance holes in material to be assembled using heavy hex flange screws are the normal series given in ASME B18.2.8.

28 DESIGNATION

(a) Heavy hex flange screws shall be designated by the following data, preferably in the sequence shown: product name and designation of the standard, nominal diameter and thread pitch, nominal length, steel property class or material identification, and protective coating, if required.

EXAMPLES:
(1) Heavy hex flange screw B18.2.3.9M, M10 × 1.5 × 50, Class 9.8, zinc plated per ASTM F 871M and ASTM B 633 Fe/Zn 5 Type II.
(2) Heavy hex flange screw B18.2.3.9M, M16 × 2 × 100, Class 10.9, phosphate/oil, ASTM F 1137 Grade I.
(3) Heavy hex flange screw B18.2.3.9M, reduced diameter body, fillet Type U, M16 × 2 × 80, Class 10.9 oiled.
(4) Heavy hex flange screw B18.2.3.9M, M16 × 1 × 30, corrosion resistant steel A1-70 ASTM F 738M.

NOTE: It is common practice in ISO standards to omit thread pitch from the nominal size designation when screw threads are the metric coarse thread series, e.g., M10 is M10 × 1.5.

(b) For a recommended part identifying number (PIN) system for metric heavy hex flange screws, see ASME B18.24.1.

Copyright ASME International
Provided by IHS under license with ASME
No reproduction or networking permitted without license from IHS
Not for Resale

NONMANDATORY APPENDIX A
COMPARISON WITH ISO STANDARDS

This Appendix describes the technical differences between ASME B18.2.3.9M-2001 and ISO/DIS 8102, with unpublished changes agreed upon in ISO/TC2/WG2, May 1989 and later, and related ISO standards.

A1 PRODUCT NAMES *BOLT* AND *SCREW*

Of the products named *hex flange screw* per B18.2.3.9M, those that are threaded full length would be named *hexagon screw with flange* per ISO 1891, but those that are not threaded full length are named *hexagon bolt with flange* per ISO 1891 and ISO/DIS 8102.

A2 MAXIMUM WIDTH ACROSS CORNERS

B18.2.3.9M Table 1 maximum width across corners is not specified in ISO 8102. Instead, ISO/DIS 4759-1: May 1998 would control the shape of the hexagon by zero positional tolerance at maximum material condition, which is not specified in B18.2.3.9M.

A3 GAGING OF HEX FLANGE HEAD

ISO/DIS 8102 would specify a gage C for gaging flange thickness, which is not included in B18.2.3.9M.

A4 POSITION OF HEAD

B18.2.3.9M para. 11 and Table 2 specify positional tolerance at maximum material condition, as in ISO/DIS 4759-1: May 1998, instead of regardless of feature size, as in ISO 4759/I-1978. ISO/DIS 4759-1: May 1998 also specifies position of the flange diameter with respect to the shank, which is not specified in B18.2.3.9M.

A5 BEARING SURFACE

B18.2.3.9M Table 2 values for circular runout of the bearing circle are greater than those in ISO 4759/I-1978 or ISO/DIS 4759-1: May 1998. ISO/DIS 4759-1: May 1998 specifies straightness of radial lines on the bearing surface, which is not specified in B18.2.3.9M.

A6 FILLETS

B18.2.3.9M Table 3 minimum fillet transition diameters and shorter maximum fillet lengths for screws threaded full length are not specified in ISO/DIS 8102. For Type U fillet, the radius of the fillet extension, r_4 reference in ISO/DIS 8102, is not specified in B18.2.3.9M.

A7 BODY DIAMETER FOR SCREWS THREADED FULL LENGTH

B18.2.3.9M Tables 3 and 4 minimum diameters of unthreaded shank for screws threaded full length are not specified in ISO/DIS 8102.

A8 REDUCED DIAMETER BODY

B18.2.3.9M Table 6 maximum and minimum diameters of reduced body differ from ISO 8102 "d_2 is approximately equal to the pitch diameter (rolling diameter)." The limits specified in B18.2.3.9M Table 6 were proposed to ISO/TC2/WG2 in May 1995, but ISO/TC2/WG2 was not willing to specify limits for the rolling diameter.

A9 POINT

B18.2.3.9M para. 17 and Table 5 optional rounded point is not in ISO/DIS 8102, but Table 8 agrees with ISO 4753.

A10 STRAIGHTNESS

B18.2.3.9M specifies straightness at maximum material condition, as in ISO/DIS 4759-I: May 1998, instead of regardless of feature size, as in ISO 4759/I-1978. The formula in B18.2.3.9M results in straightness tolerance zone diameters that are smaller for lengths 12 mm and shorter, and larger for lengths 16 mm and

Copyright ASME International
Provided by IHS under license with ASME
No reproduction or networking permitted without license from IHS
Not for Resale

longer, than those in ISO 4759/I-1978 or ISO/DIS 4759-1: May 1998.

A11 GRIP LENGTH FOR SCREWS THREADED FULL LENGTH

B18.2.3.9M Tables 9 and 10 maximum unthreaded lengths under the head of screws shorter than 2*D* differ from ISO 3508.

A12 TRANSITION THREADS

B18.2.3.9M para. 20.4 specification on root contour of transition threads is not in ISO/DIS 8102.

A13 POSITION OF BODY-TO-THREAD

Coaxiality or position of the body with respect to the thread, specified in ISO 4759/I or ISO/DIS 4759-1, is not specified in B18.2.3.9M.

A14 MARKING

B18.2.3.9M para. 22 allows markings on the top of the flange but not on the side of the head, as alternatives to markings on the top of the head, while ISO 898-1 allows markings on the side of the head but not on the top of the flange. B18.2.3.9M para. 22 dimensions of head markings are not specified in ISO/DIS 8102 or ISO 898-1.

A15 INSPECTION AND QUALITY ASSURANCE

B18.2.3.9M paras. 25 and 26 inspection and quality assurance provisions differ from those in ISO/DIS 8102.

Copyright ASME International
Provided by IHS under license with ASME
No reproduction or networking permitted without license from IHS
Not for Resale

NONMANDATORY APPENDIX B
SCREW STRAIGHTNESS GAGE AND GAGING PROCEDURE

The conformance of screws to shank straightness or camber limitations set forth in para. 18 may be checked by using the gage illustrated below in accordance with the following procedure:

(a) Allowable total camber on the product to be inspected shall be calculated in accordance with para. 18.

(b) The total camber thus derived shall be added to the specified maximum body diameter, and the movable rail of gage shall be adjusted to provide a parallel space between the rails equal to this distance by obtaining common readings on both micrometer heads.

(c) The movable rail shall then be locked in place by tightening securing screws.

(d) The product shall then be inserted between rails and shall be rotated by hand through full 360 deg. Any interference occurring between the product and the gage that is sufficient to prevent rotation shall indicate excessive camber.

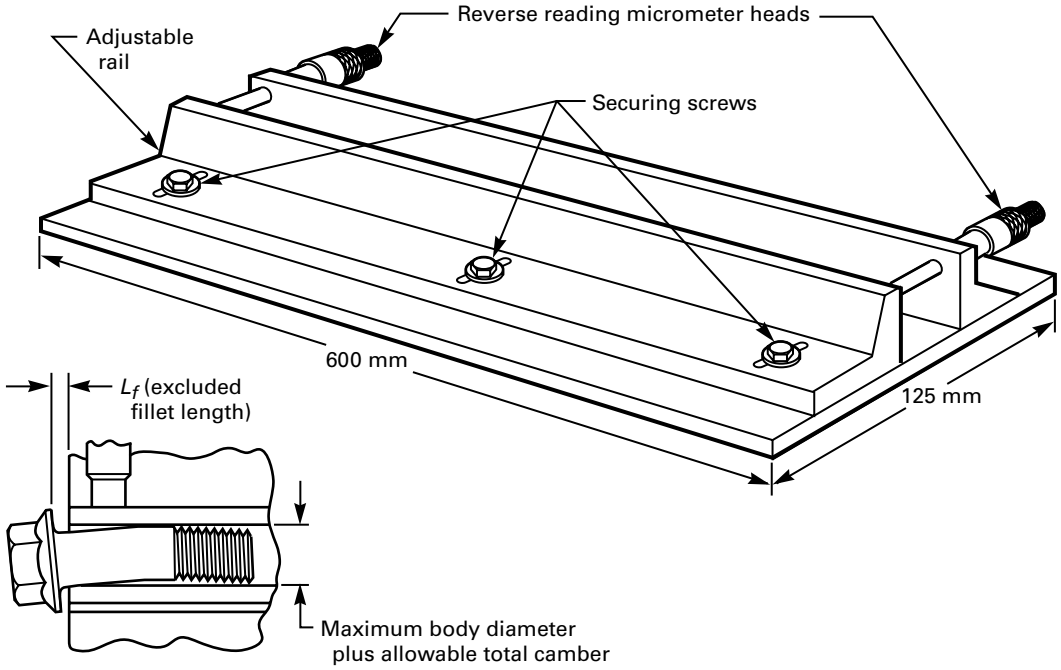

FIG. B1 TYPICAL STRAIGHTNESS GAGE

Copyright ASME International
Provided by IHS under license with ASME
No reproduction or networking permitted without license from IHS
Not for Resale

ASME Services

ASME is committed to developing and delivering technical information. At ASME's Information Central, we make every effort to answer your questions and expedite your orders. Our representatives are ready to assist you in the following areas:

ASME Press
Codes & Standards
Credit Card Orders
IMechE Publications
Meetings & Conferences
Member Dues Status
Member Services & Benefits
Other ASME Programs
Payment Inquiries
Professional Development
Short Courses
Publications
Public Information
Self-Study Courses
Shipping Information
Subscriptions/Journals/Magazines
Symposia Volumes
Technical Papers

How can you reach us? It's easier than ever!

There are four options for making inquiries* or placing orders. Simply mail, phone, fax, or E-mail us and an Information Central representative will handle your request.

Mail
ASME
22 Law Drive, Box 2900
Fairfield, New Jersey
07007-2900

Call Toll Free
US & Canada: 800-THE-ASME
(800-843-2763)
Mexico: 95-800-THE-ASME
(95-800-843-2763)
Universal: 973-882-1167

Fax—24 hours
973-882-1717
973-882-5155

E-Mail—
24 hours
Infocentral@asme.org

* Information Central staff are not permitted to answer inquiries about the technical content of this code or standard. Information as to whether or not technical inquiries are issued to this code or standard is shown on the copyright page. All technical inquiries must be submitted in writing to the staff secretary. Additional procedures for inquiries may be listed within.

--`,,`-`-`,,`,,`,`,,`---

Copyright ASME International
Provided by IHS under license with ASME
No reproduction or networking permitted without license from IHS

Not for Resale

ISBN 0-7918-2715-1



M13301

Copyright ASME International
Provided by IHS under license with ASME
No reproduction or networking permitted without license from IHS

Not for Resale