ACCEPTANCE NOTICE

This non-Government document was adopted on 26 March 1979 and is approved for use by the DoD and Federal Agencies. Metric heavy hex head screws shall conform to this document and Appendix III, which establishes standard items for Government application. Appendix III, Table 8 shall be used for item selection in accordance with the part numbering system and size information contained therein. The indicated industry group has furnished the clearances required by existing regulations. Copies of the document are stocked by DoD Single Stock Point, Naval Publications and Forms Center, Philadelphia, PA, 19120, for issue to DoD activities and Federal Agencies only. Contractors and industry groups must obtain copies directly from:

The American Society of Mechanical Engineers
United Engineering Center, 345 E. 47th Street
New York, NY 10017 or

The American National Standards Institute
1430 Broadway, New York, NY 10018

Title of Document:	Screw, Heavy Hex Head – Metric
ANSI Document No.:	ANSI B18.2.3.3M-1979
Date of Specific Issue Adopted:	26 March 1979
Releasing Industry Group:	The American Society of Mechanical Engineers

Custodians:
Army – AR
Navy – AS
Air Force – 99

Military Coordinating Activity
Army – AR

(Project 5305-1397)

Review Activities:
Army – AV, MI, ER
Navy – MC
DLA – IS
NSA – NS
Civil Agencies:
GSA-FSS

User Activities:
Army – ME, AT
Navy – SH

NOTICE: When reaffirmation, amendment, revision, or cancellation of this standard is initially proposed, the industry group responsible for this standard shall inform the Military Coordinating Activity of the proposed action and request their participation.

FSC 5305

No part of this document may be reproduced in any form, in an electronic retrieval system or otherwise, without the prior written permission of the publisher.

Date of Issuance: August 31, 1979

Copyright © 1979 by
THE AMERICAN SOCIETY OF MECHANICAL ENGINEERS
All Rights Reserved
Printed in U.S.A.

THIS DOCUMENT CONTAINS 1 PAGES.

Copyright ASME International
Provided by IHS under license with ASME
No reproduction or networking permitted without license from IHS
Not for Resale

ERRATA

to

ANSI B18.2.3.3M-1979
METRIC HEAVY HEX SCREWS

Page 3, Note 17, *change* B1.13 *to read* B1.13M

Page 6, Table 2, *for* Nominal Length 180, *under* M20 x 2.5 *change* 123.0 *to read* 128.0

Page 7, Table 3, *in first column under* B (Ref), *change to read* Screw Length ≤ 125

Page 7, Table 3, *in second column under* B (Ref), *change to read* Screw Lengths > 125 and ≤ 200

Page 7, Table 3, *in* X (Ref) *column, change to read* Transition Thread Length

Page 7, Table 4, *in first column heading, delete* D

Page 9, *in lowest illustration, change* CLASS 6h *to read* CLASS 6H

Page 12, *for* MATERIAL AND FINISH CODE A *and* B, *change* 0.005 mm *to read* 5.1 μm

THE AMERICAN SOCIETY OF MECHANICAL ENGINEERS
345 East 47th Street, New York, N.Y. 10017

April 1981

Copyright ASME International
Provided by IHS under license with ASME
No reproduction or networking permitted without license from IHS

Not for Resale

AMERICAN NATIONAL STANDARD

Metric Heavy Hex Screws

ANSI B18.2.3.3M - 1979

Government Key Words:
Screw, Heavy Hex Head — Metric

SECRETARIAT

SOCIETY OF AUTOMOTIVE ENGINEERS
THE AMERICAN SOCIETY OF MECHANICAL ENGINEERS

PUBLISHED BY

THE AMERICAN SOCIETY OF MECHANICAL ENGINEERS

United Engineering Center 345 East 47th Street New York, N. Y. 10017

Copyright ASME International
Provided by IHS under license with ASME
No reproduction or networking permitted without license from IHS

Not for Resale

ANSI B18.2.3.3M-79
26 MARCH 1979

ACCEPTANCE NOTICE

This non-Government document was adopted on 26 March 1979 and is approved for use by the DoD and Federal Agencies. Metric heavy hex head screws shall conform to this document and Appendix III, which establishes standard items for Government application. Appendix III, Table 8 shall be used for item selection in accordance with the part numbering system and size information contained therein. The indicated industry group has furnished the clearances required by existing regulations. Copies of the document are stocked by DoD Single Stock Point, Naval Publications and Forms Center, Philadelphia, PA, 19120, for issue to DoD activities and Federal Agencies only. Contractors and industry groups must obtain copies directly from:

The American Society of Mechanical Engineers
United Engineering Center, 345 E. 47th Street
New York, NY 10017 or

The American National Standards Institute
1430 Broadway, New York, NY 10018

Title of Document:	Screw, Heavy Hex Head – Metric
ANSI Document No.:	ANSI B18.2.3.3M-1979
Date of Specific Issue Adopted:	26 March 1979
Releasing Industry Group:	The American Society of Mechanical Engineers

Custodians:
Army – AR
Navy – AS
Air Force – 99

Military Coordinating Activity
Army – AR

(Project 5305-1397)

Review Activities:
Army – AV, MI, ER
Navy – MC
DLA – IS
NSA – NS

User Activities:
Army – ME, AT
Navy – SH

Civil Agencies:
GSA-FSS

NOTICE: When reaffirmation, amendment, revision, or cancellation of this standard is initially proposed, the industry group responsible for this standard shall inform the Military Coordinating Activity of the proposed action and request their participation.

FSC 5305

No part of this document may be reproduced in any form, in an electronic retrieval system or otherwise, without the prior written permission of the publisher.

Date of Issuance: August 31, 1979

Copyright © 1979 by
THE AMERICAN SOCIETY OF MECHANICAL ENGINEERS
All Rights Reserved
Printed in U.S.A.

Copyright ASME International
Provided by IHS under license with ASME
No reproduction or networking permitted without license from IHS

Not for Resale

FOREWORD

American National Standards Committee B18 for the standardization of bolts, screws, nuts, rivets and similar fasteners was organized in March 1922, as Sectional Committee B18 under the aegis of the American Engineering Standards Committee (later the American Standards Association, then the United States of American Standards Institute and, as of October 6, 1969, the American National Standards Institute, Inc.), with the Society of Automotive Engineers and the American Society of Mechanical Engineers as joint sponsors. Subcommittee 2 was subsequently established and charged with the responsibility for technical content of standards covering wrench head bolts and nuts.

At its meeting on December 4, 1974, Committee B18 authorized preparation of a series of standards for metric fasteners. Subcommittee 2 was assigned responsibility for developing standards for metric hex bolts, screws and nuts.

At a meeting on September 22, 1976, Subcommittee 2 organized the contents of a standard covering eight different hex head screw and bolt products. Actual drafting was postponed until ISO/TC2 could reach final decisions relating to basic dimensions and characteristics of hex bolts, screws and nuts. At ISO/TC2 meetings held in April 1977, final actions were taken. Committee B18 affirmed the TC2 decisions at a meeting on June 29, 1977 and drafting of this standard was started.

In February 1978, Committee B18 established a cooperative program with the Department of Defense to draft American National Standards for metric fasteners in such a way that they could be used directly by the Government for procurement purposes. The Department of Defense requested that each of the eight products be covered in separate standards, and Subcommittee 2 accepted this approach at its meeting on June 27, 1978.

This standard was approved by letter ballot of Committee B18 on September 15, 1978, and was subsequently approved by the secretariat and submitted to the American National Standards Institute for designation as an American National Standard. This was granted on March 26, 1979.

Copyright ASME International
Provided by IHS under license with ASME
No reproduction or networking permitted without license from IHS
Not for Resale

AMERICAN NATIONAL STANDARDS COMMITTEE B18
STANDARDIZATION OF BOLTS, NUTS, RIVETS, SCREWS, WASHERS AND SIMILAR FASTENERS

OFFICERS

R. P. Trowbridge, *Chairman*
J. B. Levy, *Vice-Chairman*
H. G. Muenchinger, *Vice-Chairman*
Richard McGinnis, *Secretary*

COMMITTEE PERSONNEL

AMERICAN CHAIN ASSOCIATION
L. E. Hampel, Moline Malleable Iron Company, St. Charles, Illinois

AMERICAN HARDWARE MANUFACTURERS ASSOCIATION
Donald Wanek, Wrought Washer Manufacturing Company, Milwaukee, Wisconsin

AMERICAN INSTITUTE OF INDUSTRIAL ENGINEERS
R. T. Kelly, Hitchcock Publishing Company, Wheaton, Illinois

AMERICAN SOCIETY OF AGRICULTURAL ENGINEERS
E. R. Friesth, Deere & Company, Moline, Illinois

AMERICAN SOCIETY OF MECHANICAL ENGINEERS, THE
A. R. Machell, Jr., Xerox Corporation, Rochester, New York
F. P. Tisch, Desert Hot Springs, California
R. P. Trowbridge, GM Technical Center, Warren, Michigan
C. R. Adams, Alternate, Newport News Shipbuilding & Dry Dock Company, Newport News, Virginia
K. E. McCullough, Alternate, SPS Technologies, Jenkintown, Pennsylvania

ANTI-FRICTION BEARING MANUFACTURERS ASSOCIATION
W. J. Derner, FMC Corporation, Indianapolis, Indiana

ENGINE MANUFACTURERS ASSOCIATION
K. F. Naylor, Cummins Engine Company, Columbus, Indiana

FARM & INDUSTRIAL EQUIPMENT INSTITUTE
E. R. Friesth, Deere & Company, Moline, Illinois

HAND TOOLS INSTITUTE
C. B. Ingersoll, J. H. Williams Company, Buffalo, New York

INDUSTRIAL FASTENERS INSTITUTE
R. B. Belford, Industrial Fasteners Institute, Cleveland, Ohio
A. R. Breed, The Lamson & Sessions Company, Cleveland, Ohio
D. A. Garrison, Russell, Burdsall & Ward, Inc. Rock Falls, Illinois
R. W. Groover, Bethlehem Steel Company, Lebanon, Pennsylvania
E. J. Heldman, Holo-Krome Company, West Hartford, Connecticut
Jack Shugart, Rockford Products Corporation, Rockford, Illinois
D. P. Wagner, Illinois Tool Works, Inc., Elgin, Illinois
D. D. Wheeler, Armco Steel Corporation, Kansas City, Missouri
N. W. Bellas, Alternate, Illinois Tool Works, Inc., Elgin, Illinois
R. M. Harris, Alternate, Bethlehem Steel Corporation, Lebanon, Pennsylvania
F. R. Ling, Alternate, Russell, Burdsall & Ward, Inc., Mentor, Ohio

METAL CUTTING TOOL INSTITUTE
D. J. Emanuelli, Greenfield Tap & Die, Greenfield, Massachusetts

Copyright ASME International
Provided by IHS under license with ASME
No reproduction or networking permitted without license from IHS
Not for Resale
PROBLEM HARD COPY

NATIONAL ELECTRICAL MANUFACTURERS ASSOCIATION
J. B. Levy, General Electric Company, Schenectady, New York
F. F. Weingruber, Westinghouse Electric Corporation, Pittsburgh, Pennsylvania
F. K. Kitzantides, Alternate, National Electrical Manufacturers Association, Washington, D.C.

NATIONAL ELEVATOR INDUSTRY, INC.
R. J. Cummings, Otis Elevator Company, Mahwah, New Jersey

SOCIETY OF AUTOMOTIVE ENGINEERS
H. W. Ellison, GM Corporation, Warren, Michigan
S. E. Mallen, Ford Motor Company, Dearborn, Michigan
R. S. Piotrowski, Mack Trucks, Inc., Allentown, Pennsylvania
C. F. Schaening, GM Engineering Standards Section, Warren, Michigan
R. R. Sjoberg, International Harvester Company, Hinsdale, Illinois
D. W. Vial, Chrysler Corporation, Detroit, Michigan

SOCKET SCREW PRODUCTS BUREAU
E. R. Carter, Jr., The Allen Manufacturing Company, Hartford, Connecticut
Jack Trilling, Great Lakes Screw, Chicago, Illinois

TELEPHONE GROUP
R. A. Agnew, Western Electric Company, Chicago, Illinois
R. Morse, Bell Laboratories, Columbus, Ohio
H. Haefeli, Alternate, Bell Laboratories, Columbus, Ohio

TUBULAR RIVET & MACHINE INSTITUTE
J. G. Zeratsky, National Rivet & Manufacturing Company, Waupun, Wisconsin

U.S. DEPARTMENT OF THE AIR FORCE
To be appointed

U.S. DEPARTMENT OF THE ARMY
M. E. Taylor, U.S. Army Armament R & D Command, Dover, New Jersey
Allen Herskovitz, Alternate, U.S. Army Armament R & D Command, Dover, New Jersey

U.S. DEPARTMENT OF DEFENSE
Eli Schwartz, Defense Industrial Supply Center, Philadelphia, Pennsylvania
Lewis Pieninck, Alternate, Defense Industrial Supply Center, Philadelphia, Pennsylvania

U.S. DEPARTMENT OF THE NAVY
J. R. Ruff, Department of the Navy, Washington, D.C.
M. S. Orysh, Alternate, Department of the Navy, Philadelphia, Pennsylvania

U.S. MACHINE CAP WOOD & TAPPING SCREW BUREAUS
S. C. Adamek, Pheoll Manufacturing Company, Chicago, Illinois
R. M. Byrne, U.S. Screw Service Bureau, New York, New York
T. J. Ferry, E.W. Ferry Screw Products Company, Inc., Cleveland, Ohio
Casey Gordon, Parker-Kalon, Campbellsville, Kentucky
H. G. Muenchinger, Continental Screw Company, New Bedford, Massachusetts
K. D. Ringland, Parker-Kalon, USM Corporation, Campbellsville, Kentucky
R. H. Seymour, Reed & Prince Manufacturing Company, Worcester, Massachusetts
Louis Zanin, Elco Industries, Inc., Rockford, Illinois
Paul Foytho, Alternate, Harvey Hubbel, Inc., Bridgeport, Connecticut

INDIVIDUAL COMPANIES
D. N. Badgley, Clark Equipment Company, Battle Creek, Michigan
R. W. Bertoia, The Ohio Nut & Washer Company, Mingo Junction, Ohio
E. D. Cowlin, Canton, Ohio
J. E. Eaton, Jr., IBM Corporation, Boulder, Colorado
J. F. Tornow, Microdot Inc., Troy, Michigan

INDIVIDUAL MEMBERS
C. O. Franklin, Valley Bolt Company, Marion, Iowa
F. E. Graves, Fairfield, Connecticut

Copyright ASME International
Provided by IHS under license with ASME
No reproduction or networking permitted without license from IHS
Not for Resale

PERSONNEL OF SUBCOMMITTEE NO. 2 – SQUARE AND HEX BOLTS AND NUTS

R. R. Sjoberg, Chairman, International Harvester Company, Hinsdale, Illinois
R. B. Belford, Secretary, Industrial Fasteners Institute, Cleveland, Ohio
S. C. Adamek, Pheoll Manufacturing Company, Chicago, Illinois
D. N. Badgley, Clark Equipment Company, Battle Creek, Michigan
A. G. Baustert, Federal Screw Works, Detroit, Michigan
A. R. Breed, The Lamson & Sessions Company, Cleveland, Ohio
R. M. Byrne, U.S. Screw Service Bureau, New York, New York
Art Clever, Deere & Company, Moline, Illinois
W. J. Derner, FMC Corporation, Indianapolis, Indiana
D. A. Garrison, Russell, Burdsall & Ward, Inc., Rock Falls, Illinois
F. E. Graves, Fairfield, Connecticut
R. M. Harris, Bethlehem Steel Corporation, Lebanon, Pennsylvania
J. B. Levy, General Electric Company, Schenectady, New York
D. T. Lipari, Bell Telephone Laboratories, Inc., Columbus, Ohio
A. R. Machell, Jr., Xerox Corporation, Rochester, New York
K. E. McCullough, SPS Technologies, Jenkintown, Pennsylvania
J. C. McMurray, Russell, Burdsall & Ward Inc., Mentor, Ohio
H. G. Muenchinger, Continental Screw Company, New Bedford, Massachusetts
J. F. Nagy, Ford Motor Company, Dearborn, Michigan
I. M. Park, The Steel Company of Canada, Ltd., Hamilton, Ontario, Canada
C. F. Schaening, General Motors Corporation, Warren, Michigan
Lou Strang, Caterpillar Tractor Company, East Peoria, Illinois
M. E. Taylor, U.S. Army Armament R & D Command, Dover, New Jersey
R. P. Trowbridge, General Motors Corporation, Warren, Michigan
P. A. Vacca, Defense Industrial Supply Center, Philadelphia, Pennsylvania
F. F. Weingruber, Westinghouse Electric Corporation, Pittsburgh, Pennsylvania
D. D. Wheeler, Armco Steel Corporation, Kansas City, Missouri
Tony Nebesney, Alternate, FMC Corporation, Indianapolis, Indiana
L. Pieninck, Alternate, Defense Industrial Supply Center, Philadelphia, Pennsylvania

Copyright ASME International
Provided by IHS under license with ASME
No reproduction or networking permitted without license from IHS
Not for Resale
PROBLEM HARD COPY

CONTENTS

Page

General Data 1

Tables

1. Dimensions of Heavy Hex Screws 5
2. Maximum Grip Gaging Lengths and Minimum Body Lengths 6
3. Thread Lengths 7
4. Tolerance Zone 7
5. Dimensions of Underhead Fillets 8
6. Length Tolerances 8
7. Dimensions of Points 8

Appendixes

Appendix I — Thread Runout and Screw Straightness Referee Gages and Gaging Procedure 9

Appendix II — Recommended Clearance Holes For Screws 10

Appendix III — Government Standard Items and Part Numbering System 11

Copyright ASME International
Provided by IHS under license with ASME
No reproduction or networking permitted without license from IHS

Not for Resale

AMERICAN NATIONAL STANDARD

METRIC HEAVY HEX SCREWS

GENERAL DATA

1. Scope

1.1 This standard covers the complete general and dimensional data for metric heavy hex screws recognized as American National Standard.

1.2 The inclusion of dimensional data in this standard is not intended to imply that all of the sizes in conjunction with the various options described herein are stock items. Consumers are requested to consult with manufacturers concerning lists of stock production heavy hex screws.

1.3 Heavy hex screws purchased for Government use shall conform to this standard, and additionally to the requirements of Appendix III.

2. Comparison With ISO Standards

2.1 ISO has not yet initiated development of an ISO standard for heavy hex screws. However, nominal diameters and thread pitches, body diameters, widths across flats, bearing surface diameters, head heights, thread lengths, thread dimensions and nominal lengths are in accord with ISO standards for related hex head screws and bolts.

2.2 Letter symbols designating dimensional characteristics are in accord with those used in ISO standards, except capitals have been used for data processing convenience instead of lower case letters used in ISO standards.

3. Dimensions

3.1 All dimensions in this standard are in millimeters, unless stated otherwise.

3.2 Symbols specifying geometric characteristics are in accord with American National Standard, Dimensioning and Tolerancing, ANSI Y14.5-1973.

4. Top of Head. The top of head shall be full form and chamfered or rounded. The diameter of the chamfer circle or the start of rounding shall be equal to the maximum width across flats within a tolerance of minus 15 percent.

5. Head Height. The head height is the distance, as measured parallel to the axis of the screw, from the top of the head to the plane of the bearing surface.

6. Wrenching Height. The wrenching height is the distance, measured at a corner of the hex, from the plane of the bearing surface to the last plane of full-formed hex, i.e., the plane closest to the top of head at which the width across corners of the hex is within its specified limits.

7. Corner Fill. The rounding due to lack of fill at the six corners of the head shall be reasonably uniform.

8. True Position of Head. The axis of the hex head shall be located at true position with respect to the axis of the screw (determined over a distance under the head equal to one screw diameter) within a tolerance zone of diameter specified in Table 4.

9. Bearing Surface. The bearing surface shall be flat and washer-faced. Diameter of bearing surface shall not exceed the width across flats nor be less than the specified minimum washer face diameter. For referee purposes, measurement of bearing surface diameter shall be taken at mid-thickness of the washer face. The plane of the bearing surface shall be perpendicular to the axis of the body within the total runout specified in Table 1. The measurement of bearing face runout shall be made as close to the periphery of the washer face as possible while the screw is held in a collet or other gripping device at a distance equal to one screw diameter from the underside of the head.

Copyright ASME International
Provided by IHS under license with ASME
No reproduction or networking permitted without license from IHS
Not for Resale

10. Fillet. The fillet configuration at the junction of the head and shank shall be as shown in Figures 1 and 2, and shall have limits as specified in Table 5. The fillet shall be a smooth and continuous curve fairing smoothly into the under head bearing surface and the shank within the limits specified. No radius in the fillet contour shall be less than R minimum.

11. Body Diameter. The diameter of the body on screws which are not threaded full length shall be within the limits specified in Table 1. For screws threaded full length, the diameter of the unthreaded shank under the head shall not exceed the specified maximum body diameter nor be less than the minimum body diameter specified in Table 4.

12. Length. The length of the screw shall be measured parallel to the axis of the screw from the under head bearing surface to the extreme end of the shank. Tolerances for screw lengths are given in Table 6.

13. Points. The end of the screw shall be chamfered from a diameter equal to or slightly less than the thread root diameter to produce a length of chamfer or incomplete thread within the limits for Z specified in Table 7. The end of the screw shall be reasonably square with the axis of the screw, and where pointed blanks are used, the slight rim or cup resulting from roll-threading shall be permissible. At the manufacturer's option, the end of the screw may have a rounded point of radius V as specified in Table 7.

14. Straightness. Shanks of screws shall be straight within a maximum camber of 0.006 mm/mm of screw length for screws having nominal lengths of 300 mm or shorter; and within 0.008 mm/mm of screw length for screws having nominal lengths over 300 mm to 600 mm. The referee gage and gaging procedure for checking screw straightness is given in Appendix I.

15. Thread Length.

15.1 The length of thread on screws shall be controlled by the maximum grip gaging length (Lg) and the minimum body length (Ls) as set forth in 15.2 thru 15.5.

15.2 Grip gaging length, Lg max, is the distance measured parallel to the axis of the screw, from the under head bearing surface to the face of a non-counterbored or non-countersunk standard GO thread ring gage assembled by hand as far as the thread will permit. For standard diameter-length combinations of screws, the values for Lg max are specified in Table 2. For diameter-length combinations not listed in Table 2, the maximum grip gaging length, as calculated and rounded to one decimal place, shall be equal to the nominal screw length, L, minus the basic thread length, B, as specified in Table 3 (Lg. max = L – B). Lg max shall be used as a criterion for inspection.

15.3 Body length, Ls min, is the distance, measured parallel to the axis of the screw, from the under head bearing surface to the last scratch of thread or top of the extrusion angle, whichever is closest to the head. For standard diameter-length combinations of screws, the values of Ls min are specified in Table 2. For diameter-length combinations not listed in Table 2, the minimum body length, as calculated and rounded to one decimal place, shall be equal to the maximum grip gaging length as computed minus the maximum transition thread length as specified in Table 3 (Ls min = Lg max – X max). Ls min shall be used as a criterion for inspection. Screws of nominal lengths which have a calculated Ls min value equal to or less than the length, Lu, as specified in Table 3 shall be threaded full length. For screws which are threaded full length, the distance from the under head bearing surface to the face of a non-counterbored or non-countersunk standard GO thread ring gage assembled by hand as far as the thread will permit shall not exceed the length, Lu, as specified in Table 3.

15.4 Basic thread length, B, as specified in Table 3 is a reference dimension intended for calculation purposes only, and is the distance, measured parallel to the axis of the screw, from the extreme end of the screw to the last complete (full form) thread.

15.5 Transition thread length, X max, as specified in Table 3 is a reference dimension intended for calculation purposes only. It includes the length of incomplete threads and tolerances on grip gaging length and body length. The transition from full thread to incomplete thread shall be smooth and uniform. The major diameter of the incomplete threads shall not exceed the actual major diameter of the complete (full form) threads. For screws of property class 10.9 and higher strength materials (tensile strength 1040 MPa and higher), the transition threads shall

Copyright ASME International
Provided by IHS under license with ASME
No reproduction or networking permitted without license from IHS

Not for Resale

PROBLEM HARD COPY

have a rounded root contour no radius of which shall be less than the specified minimum radius at the root of the full form thread.

16. Thread Runout. The runout of the thread with respect to the axis of the screw shank shall be within the limits specified in Table 4 when measured at a distance of one screw diameter from the last complete thread. The referee gage and gaging procedure for checking thread runout are given in Appendix I.

17. Thread Series. Threads shall be metric coarse thread series conforming to dimensions for general purpose external threads given in ANSI B1.13, unless otherwise specified by the purchaser. The class 6g tolerance shall apply to plain finish (unplated or uncoated) screws, and to plated or coated screws before plating or coating. For screws with additive finish, the 6g diameters may be exceeded by the amount of the allowance, i.e., the basic diameters shall apply to screws after plating or coating.

18. Material and Mechanical Properties. Unless otherwise specified, steel screws shall conform to the requirements specified in SAE J1199 or ASTM F568. Screws of other materials such as stainless steel, brass, bronze and aluminum alloys shall have properties as agreed upon by the manufacturer and the purchaser.

19. Finish. Unless otherwise specified, screws shall be supplied with a natural (as processed) finish, unplated or uncoated.

20. Identification Symbols. Steel screws shall be marked with the property class symbol and with the manufacturer's identification symbol. Minimum height of property class symbols shall be 3.2 mm for M12 and M14 screws, and 4.0 mm for M16 and larger screws. Markings shall be located on the top of the head and may be raised or recessed unless otherwise ordered by the purchaser. When raised, markings shall project not less than 0.1 mm for M12 and M14 screws, and 0.3 mm for M16 and larger screws above the surface of the head, and total head height (head plus markings) shall not exceed the specified maximum head height plus 0.3 mm for M12 and M14 screws, and 0.4 mm for M16 and larger screws.

21. Options. Options, where specified, shall be at the discretion of the manufacturer unless otherwise agreed upon by the manufacturer and the purchaser.

22. Terminology. For definitions of terms relating to fasteners or component features thereof used in this standard, refer to American National Standard, Glossary of Terms for Mechanical Fasteners, ANSI B18.12.

23. Workmanship. Screws shall not contain an excess of surface imperfections which might affect their serviceability, such as burrs, seams, laps, loose scale and other irregularities.

24. Clearance Holes. The recommended sizes of clearance holes in material to be assembled using heavy hex screws are the normal series given in Appendix II.

25. Designation

25.1 Heavy hex screws shall be designated by the following data, preferably in the sequence shown: product name, nominal diameter and thread pitch, nominal length, steel property class or material idenfication, and protective coating, if required.

Note

It is common practice in ISO standards to omit thread pitch from the product size designation when screw threads are the metric coarse thread series, e.g., M20 is M20 x 2.5.

Examples:

Heavy hex screw, M36 x 2 x 180, class 8.8, zinc plated

Heavy hex screw, M16 x 2 x 80, silicon bronze, ASTM F468M grade 651

25.2 The government part numbering system for metric heavy hex screws is given in Appendix III.

26. Referenced Standards

Copies of referenced ASTM standards may be obtained from the American Society for Testing and Materials, 1916 Race Street, Philadelphia, Pennsylvania 19103.

Copyright ASME International
Provided by IHS under license with ASME
No reproduction or networking permitted without license from IHS
Not for Resale

Copies of referenced SAE standards may be obtained from the Society of Automotive Engineers, Inc., 400 Commonwealth Drive, Warrendale, Pennsylvania 15096.

Copies of referenced ISO standards may be obtained from the American National Standards Institute, Inc., 1430 Broadway, New York, N.Y. 10018.

Copyright ASME International
Provided by IHS under license with ASME
No reproduction or networking permitted without license from IHS

Not for Resale

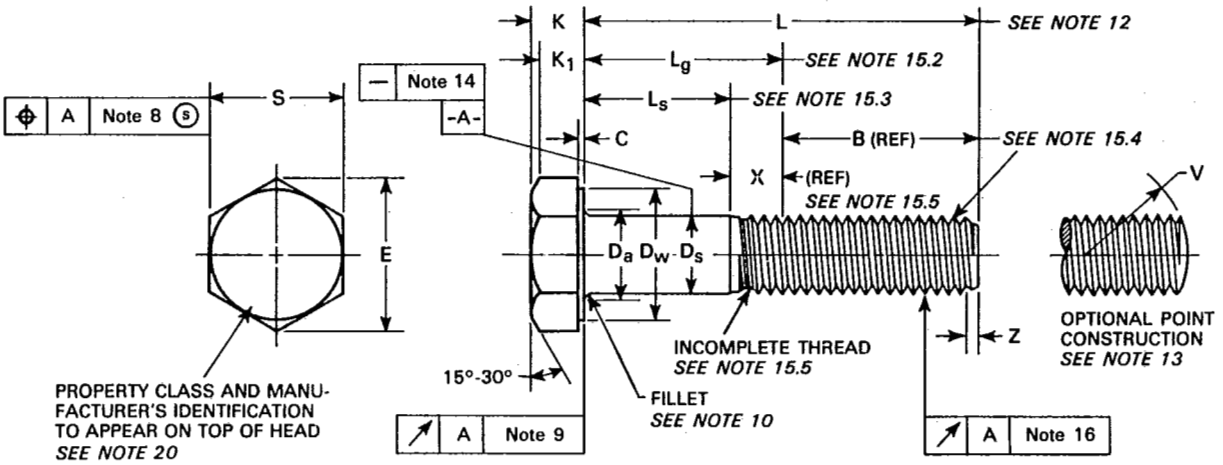

Table 1 Dimensions of Heavy Hex Screws

Nom Screw Dia and Thread Pitch	Ds		S		E		K		K_1	C		Dw	Runout of Bearing Surface FIM
	Body Diameter		Width Across Flats		Width Across Corners		Head Height		Wrenching Height	Washer Face Thickness		Washer Face Dia	
	Max	Min	Max	Min	Max	Min	Max	Min	Min	Max	Min	Min	Max
M12 x 1.75	12.00	11.73	21.00	20.67	24.25	23.35	7.76	7.24	5.2	0.6	0.3	19.6	0.39
M14 x 2	14.00	13.73	24.00	23.67	27.71	26.75	9.09	8.51	6.2	0.6	0.3	22.5	0.43
M16 x 2	16.00	15.73	27.00	26.67	31.18	30.14	10.32	9.68	7.0	0.8	0.4	25.3	0.48
M20 x 2.5	20.00	19.67	34.00	33.00	39.26	37.29	12.88	12.12	8.8	0.8	0.4	31.4	0.59
M24 x 3	24.00	23.67	41.00	40.00	47.34	45.20	15.44	14.56	10.5	0.8	0.4	38.0	0.70
M30 x 3.5	30.00	29.67	50.00	49.00	57.74	55.37	19.48	17.92	13.1	0.8	0.4	46.6	0.85
M36 x 4	36.00	35.61	60.00	58.80	69.28	66.44	23.38	21.72	15.8	0.8	0.4	55.9	1.01
See Notes	11				6.7		5		6	9		9	9

Copyright ASME International
Provided by IHS under license with ASME
No reproduction or networking permitted without license from IHS
Not for Resale

Table 2 Maximum Grip Gaging Lengths And Minimum Body Lengths

Nom Dia and Thd Pitch	M12 x 1.75		M14 x 2		M16 x 2		M20 x 2.5		M24 x 3		M30 x 3.5		M36 x 4	
L Nominal Length	Lg Max	Ls Min	Lg Max	Ls Min	Lg Max	Ls Min	Lg Max	Ls Min	Lg Max	Ls Min	Lg Max	Ls Min	Lg Max	Ls Min
20														
25														
30														
35														
40														
45	15.0	6.2												
50	20.0	11.2	16.0	6.0										
(55)	25.0	16.2	21.0	11.0	17.0	7.0								
60	30.0	21.2	26.0	16.0	22.0	12.0								
(65)	35.0	26.2	31.0	21.0	27.0	17.0	19.0	6.5						
70	40.0	31.2	36.0	26.0	32.0	22.0	24.0	11.5						
(75)	45.0	36.2	41.0	31.0	37.0	27.0	29.0	16.5						
80	50.0	41.2	46.0	36.0	42.0	32.0	34.0	21.5	26.0	11.0				
(85)	55.0	46.2	51.0	41.0	47.0	37.0	39.0	26.5	31.0	16.0				
90	60.0	51.2	56.0	46.0	52.0	42.0	44.0	31.5	36.0	21.0				
100	70.0	61.2	66.0	56.0	62.0	52.0	54.0	41.5	46.0	31.0	34.0	16.5		
110	80.0	71.2	76.0	66.0	72.0	62.0	64.0	51.5	56.0	41.0	44.0	26.5	32.0	12.0
120	90.0	81.2	86.0	76.0	82.0	72.0	74.0	61.5	66.0	51.0	54.0	36.5	42.0	22.0
130			90.0	80.0	86.0	76.0	78.0	65.5	70.0	55.0	58.0	40.5	46.0	26.0
140			100.0	90.0	96.0	86.0	88.0	75.5	80.0	65.0	68.0	50.5	56.0	36.0
150					106.0	96.0	98.0	85.5	90.0	75.0	78.0	60.5	66.0	46.0
160					116.0	106.0	108.0	95.5	100.0	85.0	88.0	70.5	76.0	56.0
(170)							118.0	105.5	110.0	95.0	98.0	80.5	86.0	66.0
180							123.0	115.5	120.0	105.0	108.0	90.5	96.0	76.0
(190)							138.0	125.5	130.0	115.0	118.0	100.5	106.0	86.0
200							148.0	135.5	140.0	125.0	128.0	110.5	116.0	96.0
220									147.0	132.0	135.0	117.5	123.0	103.0
240									167.0	152.0	155.0	137.5	143.0	123.0
260											175.0	157.5	163.0	143.0
280											195.0	177.5	183.0	163.0
300											215.0	197.5	203.0	183.0

NOTES:

1. Lg is grip gaging length; Ls is body length.
2. Diameter-length combinations between the dashed lines are recommended. Lengths in parentheses are not recommended.
3. Screws with lengths above the heavy solid line are threaded full length.
4. For screws with lengths longer than the lower dashed lines, Lg and Ls values shall be computed from formulas as given in Note 15 of General Data.

Copyright ASME International
Provided by IHS under license with ASME
No reproduction or networking permitted without license from IHS
Not for Resale

Table 3 Thread Lengths

Nom. Screw Dia and Thread Pitch	B (Ref)			X (Ref)	Lu				
	Thread Length Basic			Translation Thread Length	Unthreaded Length Under Head				
	Screw Lengths < 125	Screw Lengths > 125 and < 200	Screw Lengths > 200	Max	Screw Lengths To and Incl.	Max	Screw Lengths Over	Screw Lengths To and Incl.	Max
M12 x 1.75	30	36	49	8.8	24	2.6	24	40	4.4
M14 x 2	34	40	53	10.0	28	3.0	28	45	5.0
M16 x 2	38	44	57	10.0	32	3.0	32	50	5.0
M20 x 2.5	46	52	65	12.5	40	3.8	40	60	6.2
M24 x 3	54	60	73	15.0	–	–	–	75	7.5
M30 x 3.5	66	72	85	17.5	–	–	–	90	8.8
M36 x 4	78	84	97	20.0	–	–	–	100	10.0

Table 4 Tolerance Zone

D	Head True Position Tolerance Zone Diameter	Dsi	Circular Runout of Shank to Thread
Nominal Screw Dia and Thread Pitch		Minimum Body Dia For Prod Threaded to Head	
M12 x 1.75	0.84	10.68	0.70
M14 x 2	0.98	12.50	0.70
M16 x 2	1.12	14.50	0.70
M20 x 2.5	1.40	18.16	0.84
M24 x 3	1.68	21.80	0.84
M30 x 3.5	2.10	27.46	0.84
M36 x 4	2.52	33.12	1.00

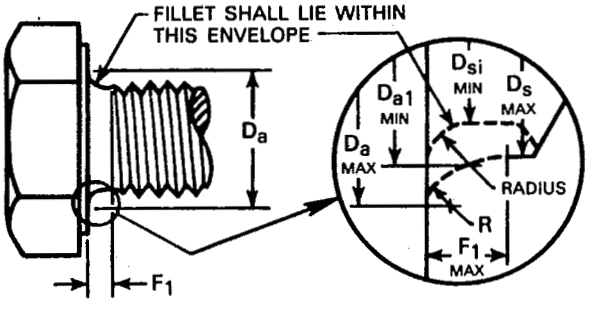

FIGURE 1 - FILLET DETAIL FOR SHORT SCREWS

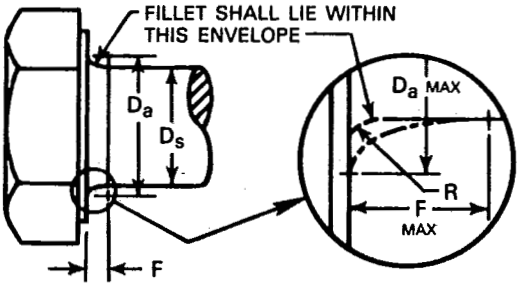

FIGURE 2 - FILLET DETAIL FOR LONG SCREWS

Copyright ASME International
Provided by IHS under license with ASME
No reproduction or networking permitted without license from IHS
Not for Resale

Table 5 Dimensions of Underhead Fillets

Nominal Screw Dia and Thread Pitch	Da_1	Da	F	F_1	R
	Fillet Transition Diameter		Fillet Length		Fillet Radius
	For Short Screws	For Short and Long Screws	For Long Screws	For Short Screws	For Short and Long Screws
	Min	Max	Max	Max	Min
M12 x 1.75	12.2	13.7	3.0	1.3	0.6
M14 x 2	14.1	15.7	3.0	1.4	0.6
M16 x 2	16.5	17.7	3.0	1.6	0.6
M20 x 2.5	20.7	22.4	4.0	2.1	0.8
M24 x 3	24.5	26.4	4.0	2.3	0.8
M30 x 3.5	30.8	33.4	6.0	3.0	1.0
M36 x 4	36.6	39.4	6.0	3.1	1.0

Notes: 1. Short screws are screws which are threaded full length.
2. Values of Dsi are given in Table 4.

Table 6 Length Tolerances

Nominal Length	Nominal Screw Diameter		
	M12 thru M16	M20 and M24	M30 and M36
to 10 mm	0.3	—	—
over 10 to 18 mm	0.4	—	—
over 18 to 30 mm	0.4	0.7	—
over 30 to 50 mm	0.8	1.3	1.5
over 50 to 80 mm	1.0	1.5	1.8
over 80 to 120 mm	1.1	1.8	2.0
over 120 to 180 mm	1.3	2.0	2.3
over 180 to 240 mm	2.3	2.3	3.0
over 240 mm	3.0	3.0	3.0

All tolerances are plus and minus

Table 7 Dimensions of Points

Nominal Screw Dia and Thread Pitch	V	Z	
	Point Radius	Point Length	
	Approx	Max	Min
M12 x 1.75	16.8	2.62	0.88
M14 x 2	19.6	3.00	1.00
M16 x 2	22.4	3.00	1.00
M20 x 2.5	28.0	3.75	1.25
M24 x 3	33.6	4.50	1.50
M30 x 3.5	42.0	5.25	1.75
M36 x 4	50.4	6.00	2.00

V equals 1.4 times thread major diameter.
Z max equals 1.5 times thread pitch.
Z min equals 0.5 times thread pitch.

Copyright ASME International
Provided by IHS under license with ASME
No reproduction or networking permitted without license from IHS
Not for Resale

APPENDIX I

THREAD RUNOUT AND SCREW STRAIGHTNESS REFEREE GAGES AND GAGING PROCEDURE

Referee gages for simultaneously checking thread runout and screw straightness are illustrated below.

Both constructions can accommodate different lengths of screws through the combination of various lengths of sleeves to build up the required length, L. When two or more sections are combined, care must be exercised to assure accurate alignment of the internal hole.

In the lower construction, GO thread ring gage A is centered on the sleeve B by means of positioning plug E and is secured in position by attachment screws C. The ring gage is set to class 6H maximum pitch diameter by use of the positioning plug E.

Diameter, Dh of counterbore or hole in sleeve(s), equals the normal clearance hole diameter specified for the screw diameter in Appendix II. The sleeve length, L, (either single sleeve or combination of sleeve sections) shall be equal to the nominal screw length minus one nominal screw diameter.

To insure adequate service life, gages and sleeve sections should be suitably hardened.

Failure of the product to enter the threads of the gage by hand for a minimum of two complete threads indicates excessive thread runout and/or out-of-straightness.

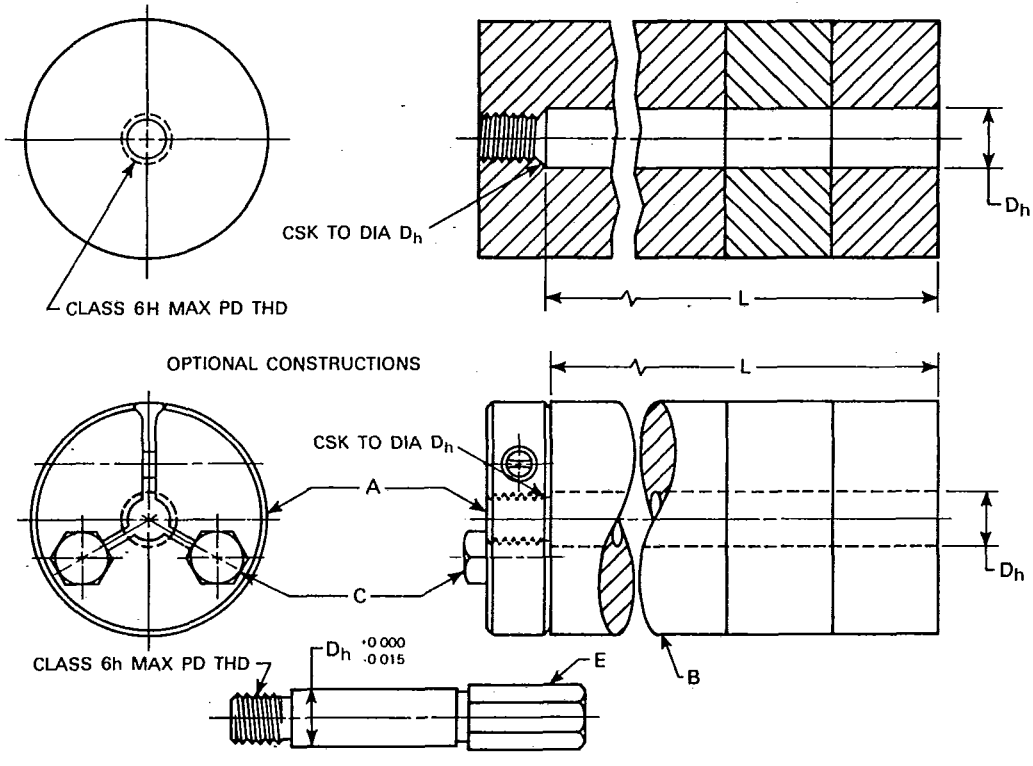

Copyright ASME International
Provided by IHS under license with ASME
No reproduction or networking permitted without license from IHS
Not for Resale

APPENDIX II

RECOMMENDED CLEARANCE HOLES FOR SCREWS

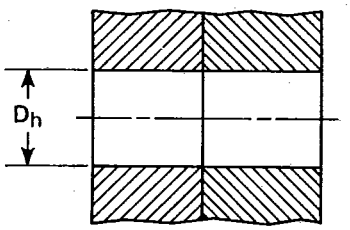

Clearance Holes for Screws

Nominal Screw Dia and Thread Pitch	Dh—Clearance Hole Diameter Basic		
	Close Clearance	Normal Clearance (Preferred)	Loose Clearance
M12 x 1.75	13.0	13.5	14.5
M14 x 2	15.0	15.5	16.5
M16 x 2	17.0	17.5	18.5
M20 x 2.5	21.0	22.0	24.0
M24 x 3	25.0	26.0	28.0
M30 x 3.5	31.0	33.0	35.0
M36 x 4	37.0	39.0	42.0

Notes:

1. **Normal Clearance.** Normal clearance hole sizes are preferred for general purpose applications, and should be specified unless special design considerations dictate the need for either a close or loose clearance hole.

2. **Close Clearance.** Close clearance hole sizes should be specified only where conditions such as critical alignment of assembled parts, wall thickness or other limitations necessitate use of a minimal hole. When close clearance holes are specified, special provision (e.g., countersinking) must be provided at the screw entry side to permit proper seating of the screw head.

3. **Loose Clearance.** Loose clearance hole sizes should be specified only for applications where maximum adjustment capability between components being assembled is necessary.

4. **Recommended Tolerances.** The clearance hole diameters given in the table are minimum sizes. Recommended tolerances are; plus 0.3 mm for screw diameters M12 thru M16; and plus 0.4 mm for screw diameters M20 thru M36; plus 0.5 mm for screw diameters M48 thru M72; and plus 0.6 mm for screw diameters M80 thru M100.

Copyright ASME International
Provided by IHS under license with ASME
No reproduction or networking permitted without license from IHS
Not for Resale

APPENDIX III

Government Standard Items and Part Numbering System

Note

The Government encourages the general use of this appendix to achieve maximum parts standardization.

This appendix establishes the standard items for Government application selected from the possible variations of items within the scope of the standard and provides a part numbering system for identification and application in engineering documents.

The following variations are standard:

a. Diameter/Thread Pitch and Length Combinations—as specified in Table 8.

b. Material—Steel, Property Class 10.9.

c. Finish—Cadmium plating or zinc plating as coded in Part Numbering System.

d. Special Features—drilled head or self-locking, as specified.

The part number shall consist of the following element codes in the order shown:

a. Document Identifier — ANSI Standard Number less decimal points

b. Material and Finish

c. Nominal Diameter

d. Nominal Length

e. Special Features

Note

The Part Numbering System may also be used for non-standard diameter and length combinations.

Quality Assurance Provisions: Quality assurance provisions shall be in accordance with FF-S-85 Screw, Cap, Slotted and Hexagon Head.

Packaging: Packaging shall be in accordance with PPP-H-1581, Hardware (Fasteners and Related Items), Packaging and Packing for Shipment and Storage of.

Copyright ASME International
Provided by IHS under license with ASME
No reproduction or networking permitted without license from IHS
Not for Resale

PART NUMBERING SYSTEM COVERING STANDARD ITEMS FOR GOVERNMENT USE

NOTE: THE GOVERNMENT ENCOURAGES THE GENERAL USE OF THIS SYSTEM TO ACHIEVE MAXIMUM PARTS STANDARDIZATION.

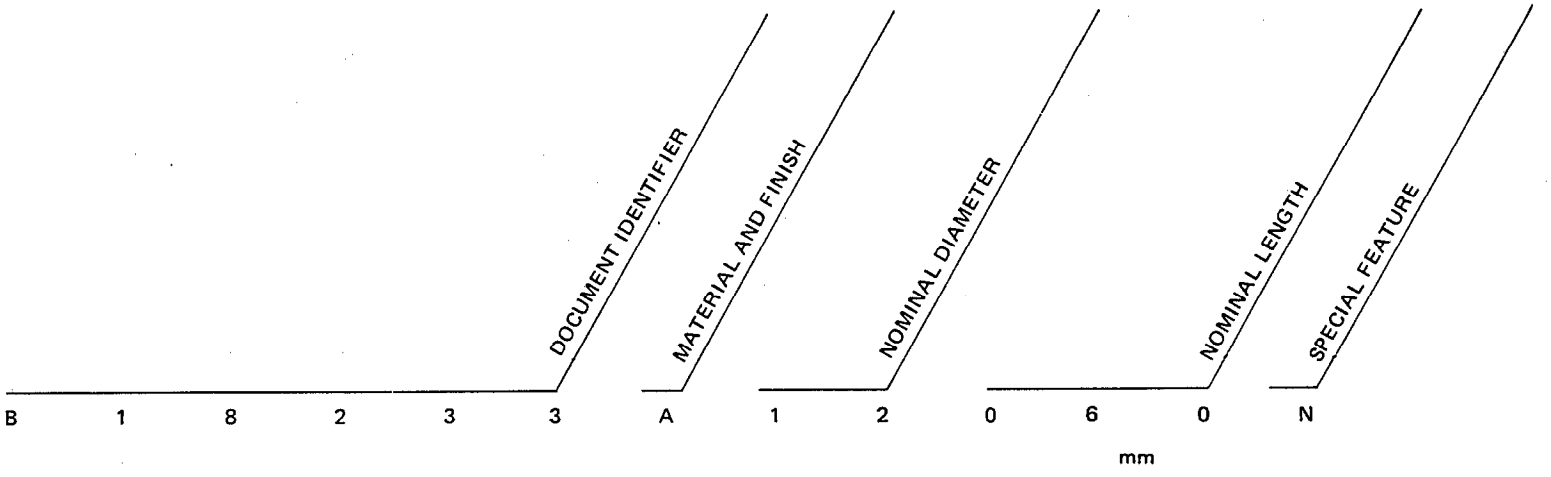

MATERIAL AND FINISH CODE

A — Steel w/Cadmium Plating per QQ-P-416, Type II, Class 3 (0.005 mm Plating Thickness), Property Class 10.9.

B — Steel w/Zinc Plating per QQ-Z-325, Type II, Class 3 (0.005 mm Plating Thickness), Property Class 10.9.

SPECIAL FEATURE CODE

N — NONE

D — Drilled Head*

L — Self-Locking*

C — Drilled Head and Self-Locking*

EXAMPLE: B18233A12060N indicates a screw, heavy, hex head-metric, made of cadmium plated steel, property class 10.9, 12 mm in diameter, 60 mm in length, with no special feature.

*Details will be provided when available.

ASME B18.2.3.3M 79 ■ 0759670 0043079 8 ■

Copyright ASME International
Provided by IHS under license with ASME
No reproduction or networking permitted without license from IHS
Not for Resale

Table 8 – Metric Heavy Hex Head Screws–Standard Sizes For Government Use

Nominal Length	Nominal Diameter and Thread Pitch						
	M12 x 1.75	M14 x 2	M16 x 2	M20 x 2.5	M24 x 3	M30 x 3.5	M36 x 4
20	12020	14020					
25			16025				
30				20030			
35					24035		
40						30040	
45							
50							36050
60		STANDARD					
70							
80		DIAMETER AND					
90			LENGTH				
100							
110					COMBINATION		
120	12120						
130							
140		14140					
150							
160			16160				
180							
200				20200			
220							
240					24240		
260							
280							
300						30300	36300

M00102

Copyright ASME International
Provided by IHS under license with ASME
No reproduction or networking permitted without license from IHS
Not for Resale