ASME B18.2.3.2M-2005
[Revision of ASME B18.2.3.2M-1979 (R1995)]

Metric Formed Hex Screws

AN AMERICAN NATIONAL STANDARD

The American Society of Mechanical Engineers

Copyright ASME International
Provided by IHS under license with ASME
No reproduction or networking permitted without license from IHS
Not for Resale

ASME B18.2.3.2M-2005

[Revision of ASME B18.2.3.2M-1979 (R1995)]

Metric Formed Hex Screws

AN AMERICAN NATIONAL STANDARD



The American Society of Mechanical Engineers

Three Park Avenue • New York, NY 10016

Copyright ASME International
Provided by IHS under license with ASME
No reproduction or networking permitted without license from IHS

Not for Resale

Date of Issuance: September 14, 2005

This Standard will be revised when the Society approves the issuance of a new edition. There will be no addenda issued to this edition.

ASME issues written replies to inquiries concerning interpretations of technical aspects of this Standard. Interpretations are published on the ASME Web site under the Committee Pages at http://www.asme.org/codes/ as they are issued.

ASME is the registered trademark of The American Society of Mechanical Engineers.

This code or standard was developed under procedures accredited as meeting the criteria for American National Standards. The Standards Committee that approved the code or standard was balanced to assure that individuals from competent and concerned interests have had an opportunity to participate. The proposed code or standard was made available for public review and comment that provides an opportunity for additional public input from industry, academia, regulatory agencies, and the public-at-large.

ASME does not "approve," "rate," or "endorse" any item, construction, proprietary device, or activity.

ASME does not take any position with respect to the validity of any patent rights asserted in connection with any items mentioned in this document, and does not undertake to insure anyone utilizing a standard against liability for infringement of any applicable letters patent, nor assumes any such liability. Users of a code or standard are expressly advised that determination of the validity of any such patent rights, and the risk of infringement of such rights, is entirely their own responsibility.

Participation by federal agency representative(s) or person(s) affiliated with industry is not to be interpreted as government or industry endorsement of this code or standard.

ASME accepts responsibility for only those interpretations of this document issued in accordance with the established ASME procedures and policies, which precludes the issuance of interpretations by individuals.

No part of this document may be reproduced in any form,
in an electronic retrieval system or otherwise,
without the prior written permission of the publisher.

The American Society of Mechanical Engineers
Three Park Avenue, New York, NY 10016-5990

Copyright © 2005 by
THE AMERICAN SOCIETY OF MECHANICAL ENGINEERS
All rights reserved
Printed in U.S.A.

Copyright ASME International
Provided by IHS under license with ASME
No reproduction or networking permitted without license from IHS

Not for Resale

CONTENTS

Foreword iv
Committee Roster v
Correspondence With the B18 Committee vi

1 Scope 1

2 Comparison With ISO Standards 1

3 Terminology 1

4 Referenced Standards 1

5 Dimensions 1

6 General Data 2

Figures

1 Formed Hex Screws 2
2 Fillet Details For Short Screws 3
3 Fillet Details For Long Screws 3
A1 Typical Straightness Gage 9
B1 Typical Gage 10

Tables

1 Dimensions of Formed Hex Screws 2
2 Tolerance Zone 3
3 Dimensions of Underhead Fillets 4
4 Dimensions of Reduced Body Diameter With Shoulder 4
5 Maximum Grip Gaging Lengths and Minimum Body Lengths 5
6 Length Tolerances 5
7 Dimensions of Points 6
8 Thread Lengths 6

Nonmandatory Appendices

A Screw Straightness Gage and Gaging Procedure 9
B Body Position Gages and Gaging Procedures 10
C Comparison With ISO Standards 11

Copyright ASME International
Provided by IHS under license with ASME
No reproduction or networking permitted without license from IHS
Not for Resale

FOREWORD

American National Standards Committee B18 for the standardization of bolts, screws, nuts, rivets, and similar fasteners was organized in March 1922 as Sectional Committee B18 under the aegis of the American Engineering Standards Committee (later the American Standards Association, then the United States of America Standards Institute and, as of October 6, 1969, the American National Standards Institute, Inc.), with the Society of Automotive Engineers and the American Society of Mechanical Engineers as joint sponsors. Subcommittee 2 was subsequently established and charged with the responsibility for technical content of standards covering wrench head bolts and nuts.

At its meeting on December 4, 1974, Committee B18 authorized preparation of a series of standards for metric fasteners. Subcommittee 2 was assigned responsibility for developing standards for metric hex bolts, screws, and nuts.

At a meeting on September 22, 1976, Subcommittee 2 organized the contents of a standard covering eight different hex head screw and bolt products. Actual drafting was postponed until ISO/TC2 could reach final decisions relating to basic dimensions and characteristics of hex bolts, screws, and nuts. At ISO/TC2 meetings held in April 1977, final actions were taken. Committee B18 affirmed the TC2 decisions at a meeting on June 29, 1977 and drafting of this Standard was started.

In February 1978, Committee B18 established a cooperative program with the Department of Defense to draft American National Standards for metric fasteners in such a way that they could be used directly by the Government for procurement purposes. The Department of Defense requested that each of the eight products be covered in separate standards, and Subcommittee 2 accepted this approach at its meeting on June 27, 1978.

The previous edition of this Standard was approved by letter ballot of Committee B18 on December 15, 1978, and was subsequently approved by the secretariat and submitted to the American National Standards Institute for designation as an American National Standard. This was granted on March 29, 1979. B18.2.3.2M was last reaffirmed without change in 1995.

This Standard was developed by the American Society of Mechanical Engineers B18 Standards Committee on Fasteners. This Standard was approved by the American National Standards Institute on April 29, 2005.

Copyright ASME International
Provided by IHS under license with ASME
No reproduction or networking permitted without license from IHS
Not for Resale

ASME B18 COMMITTEE
Standardization of Bolts, Nuts, Rivets, Screws, Washers, and Similar Fasteners

(The following is the roster of the Committee at the time of approval of this Standard.)

OFFICERS

D. A. Clever, *Chair*
R. D. Strong, *Vice Chair*
S. W. Vass, *Vice Chair*
R. L. Crane, *Secretary*

COMMITTEE PERSONNEL

J. Altman, Rotor Clip Co.
J. H. Slass, *Alternate,* Rotor Clip
J. B. Belford, Lawson Products, Inc.
V. Cartina, Aztech Locknut
D. A. Clever, Deere & Co.
A. P. Cockman, Ford Motor Co.
T. Collier, Cam-Tech Industries, Inc.
R. L. Crane, The American Society of Mechanical Engineers
A. C. DiCola, Wrought Washer Co.
B. A. Dusina, Federal Screw Works
J. S. Foote, *Corresponding Member,* Trade Association Management, Inc.
D. S. George, Ford Motor Co.
J. Greenslade, Greenslade & Co.
J. J. Grey, Fastener Consulting Services, Inc.
B. Hasiuk, Defense Supply Center Philadelphia
A. Herskovitz, Consultant
J. Hubbard, Rockford Fastener, Inc.
M. Keller, *Corresponding Member,* Paracad
J. F. Koehl, Spirol International Corp.
W. H. Kopke, ITW Shakeproof Assembly Components
M. Levinson, *Alternate,* ITW Shakeproof
J. G. Langenstein, *Emeritus Member,* Consultant
L. L. Lord, *Corresponding Member,* Consultant
W. J. Lutkus, Heli Coil Emhart
A. D. McCrindle, Canadian Fasteners Institute
K. E. McCullough, Consultant
M. D. Prasad, General Motors Corp.
J. A. Roley, *Corresponding Member,* Caterpillar, Inc.
W. L. Sakowski, Account Managers LLC
S. Savoji, ITW Medalist
W. Schevey, BGM Fastener Company, Inc.
W. R. Stevens, Ramco
R. D. Strong, General Motors Corp.
S. W. Vass, Nova Machine Products
C. B. Wackrow, MNP Corp.
R. G. Weber, Fairfield University
W. K. Wilcox, Consultant
C. J. Wilson, Industrial Fasteners Institute
R. B. Wright, Wright Tool Co.
J. G. Zeratsky, National Rivet & Manufacturing Co.

SUBCOMMITTEE 2—EXTERNALLY DRIVEN FASTENERS

S. W. Vass, *Chair,* Nova Machine Products
R. L. Crane, *Secretary,* The American Society of Mechanical Engineers
H. S. Brenner, Almay Research & Testing
D. A. Clever, Deere & Co.
A. P. Cockman, Ford Motor Co.
B. A. Dusina, Federal Screw Works
J. S. Foote, Trade Association Management, Inc.
D. S. George, Ford Motor Co.
J. Greenslade, Greenslade & Co.
A. Herskovitz, Consultant
M. W. Holubecki, Electric Boat Corp.
J. Hubbard, Rockford Fastener, Inc.
J. Jennings, *Corresponding Member,* Naval Surface Warfare Center
M. Keller, Paracad
L. L. Lord, *Corresponding Member,* Caterpillar, Inc.
A. D. McCrindle, Canadian Fasteners Institute
K. E. McCullough, Consultant
J. A. Roley, Caterpillar, Inc.
S. Savoji, ITW Medalist
G. M. Simpson, Semblex Corp.
W. R. Stevens, RAMCO
R. D. Strong, General Motors Corp.
C. B. Wackrow, MNP Corp.
W. K. Wilcox, Naval Sea Systems
C. J. Wilson, Industrial Fasteners Institute

Copyright ASME International
Provided by IHS under license with ASME
No reproduction or networking permitted without license from IHS
Not for Resale

CORRESPONDENCE WITH THE B18 COMMITTEE

General. ASME Standards are developed and maintained with the intent to represent the consensus of concerned interests. As such, users of this Standard may interact with the Committee by requesting interpretations, proposing revisions, and attending Committee meetings. Correspondence should be addressed to:

Secretary, B18 Standards Committee
The American Society of Mechanical Engineers
Three Park Avenue
New York, NY 10016-5990

Proposing Revisions. Revisions are made periodically to the Standard to incorporate changes that appear necessary or desirable, as demonstrated by the experience gained from the application of the Standard. Approved revisions will be published periodically.

The Committee welcomes proposals for revisions to this Standard. Such proposals should be as specific as possible, citing the paragraph number(s), the proposed wording, and a detailed description of the reasons for the proposal, including any pertinent documentation.

Interpretations. Upon request, the B18 Committee will render an interpretation of any requirement of the Standard. Interpretations can only be rendered in response to a written request sent to the Secretary of the B18 Standards Committee.

The request for interpretation should be clear and unambiguous. It is further recommended that the inquirer submit his/her request in the following format:

Subject:	Cite the applicable paragraph number(s) and the topic of the inquiry.
Edition:	Cite the applicable edition of the Standard for which the interpretation is being requested.
Question:	Phrase the question as a request for an interpretation of a specific requirement suitable for general understanding and use, not as a request for an approval of a proprietary design or situation. The inquirer may also include any plans or drawings that are necessary to explain the question; however, they should not contain proprietary names or information.

Requests that are not in this format will be rewritten in this format by the Committee prior to being answered, which may inadvertently change the intent of the original request.

ASME procedures provide for reconsideration of any interpretation when or if additional information that might affect an interpretation is available. Further, persons aggrieved by an interpretation may appeal to the cognizant ASME Committee or Subcommittee. ASME does not "approve," "certify," "rate," or "endorse" any item, construction, proprietary device, or activity.

Attending Committee Meetings. The B18 Standards Committee regularly holds meetings, which are open to the public. Persons wishing to attend any meeting should contact the Secretary of the B18 Standards Committee.

--`,,```,,,,````-`-`,,`,,`,`,,`---

Copyright ASME International
Provided by IHS under license with ASME
No reproduction or networking permitted without license from IHS

Not for Resale

METRIC FORMED HEX SCREWS

1 SCOPE

(a) This Standard covers the complete dimensional and general data for metric formed hex screws recognized as American National Standard. Formed hex screws are cold formed products with fully upset (non-trimmed) heads. Formed hex screws are standard only in sizes M5 thru M24, with lengths up to 150 mm, or 10 times nominal screw size, whichever is shorter.

(b) The inclusion of dimensional data in this Standard is not intended to imply that all of the sizes in conjunction with the various options described herein are stock items. Consumers should consult with suppliers concerning lists of stock production formed hex screws.

2 COMPARISON WITH ISO STANDARDS

(a) Because of numerous differences between this Standard and ISO 4015, a detailed summary is included in Appendix C.

(b) At its meeting in Varna, May 1977, ISO/TC2 studied several technical reports analyzing design considerations influencing determination of the best series of width across flats for hexagon bolts, screws, and nuts. A primary technical objective was to achieve a logical ratio between underhead (nut) bearing surface area (which determines the magnitude of the compressive stress on the bolted members) and the tensile stress area of the screw thread (which governs the clamping force that can be developed by tightening the fastener). Table 1 lists the sizes selected by ISO/TC2 to be ISO standard.

M10 screws with 15 mm width across flats are currently being produced and used in the U.S. and many other countries. This size, however, is not an ISO standard. Unless M10 screws with 15 mm width across flats are specifically ordered, M10 screws with 16 mm width across flats shall be furnished.

(c) Letter symbols designating dimensional characteristics are in accord with those used in ISO standards, except that capital letters have been used instead of the lower case letters used in ISO standards.

3 TERMINOLOGY

For definitions of terms relating to fasteners or component features thereof used in this Standard, refer to American National Standard ASME B18.12.

4 REFERENCED STANDARDS

The following is a list of publications referenced in this Standard.

ASME B1.3M, Screw Thread Gaging Systems for Dimensional Acceptability — Inch and Metric Screw Threads (UN, UNR, UNJ, M, and MJ)

ASME B1.13M, Metric Screw Threads — M Profile

ASME B18.2.8, Clearance Holes for Bolts, Screws and Studs

ASME B18.12, Glossary of Terms for Mechanical Fasteners

ASME B18.18.1, Inspection and Quality Assurance for General Purpose Fasteners

ASME B18.18.2, Inspection and Quality Assurance for High Volume Machine Assembly Fasteners

ASME B18.24.1, Part Identifying Number (PIN) Code System Standard for B18 Fasteners Externally Threaded Products

ASME Y 14.5M, Dimensioning and Tolerancing

Publisher: The American Society of Mechanical Engineers (ASME), Three Park Avenue, New York, NY 10016-5990; Order Department: 22 Law Drive, Box 2300, Fairfield, NJ 07007-2300

ASTM F 468M, Nonferrous Bolts, Hex Cap Screws and Studs for General Use (Metric)

ASTM F 568M, Carbon and Alloy Steel Externally Threaded Fasteners

ASTM F 738M, Stainless Steel Metric Bolts, Screws and Studs

ASTM F 788/F 788M, Surface Discontinuities of Bolts, Screws, and Studs — Inch and Metric Series

Publisher: The American Society for Testing and Materials (ASTM), 100 Barr Harbor Drive, West Conshohocken, PA 19428-2959.

ISO 4015, Hexagon Head Bolts — Product Grade B — Reduced Shank (shank diameter approximately equal to pitch diameter)

Publisher: International Organization for Standardization (ISO), Rue de Varembé, Case Postale 56, CH-1211, Geneve 20, Switzerland.

5 DIMENSIONS

(a) All dimensions in this Standard are given in millimeters (mm), and apply before coating, unless stated otherwise.

(b) Symbols specifying geometric characteristics are in accordance with ASME Y14.5M.

Copyright ASME International
Provided by IHS under license with ASME
No reproduction or networking permitted without license from IHS
Not for Resale

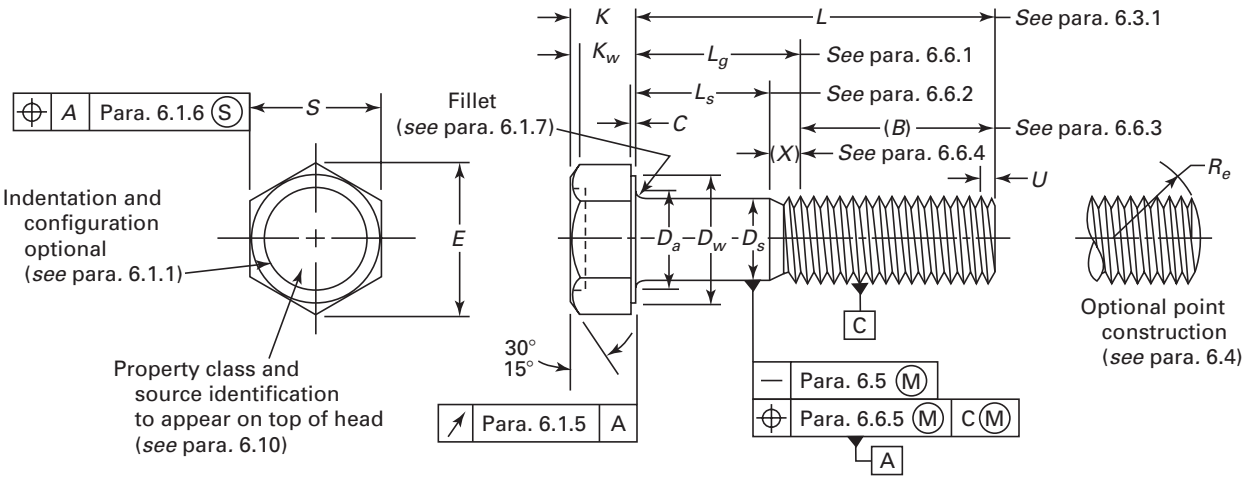

Fig. 1 Formed Hex Screws

Table 1 Dimensions of Formed Hex Screws

Nominal Screw Diameter and Thread Pitch, D	Body Diameter, D_s		Width Across Flats, S		Width Across Corners, E		Head Height, K		Wrenching Height, K_w	Washer Face Thickness, C		Washer Face Diameter, D_w	Runout of Bearing Surface FIM
	Max.	Min.	Max.	Min.	Max.	Min.	Max.	Min.	Min.	Max.	Min.	Min.	Max.
M5 × 0.8	5.00	4.82	8.00	7.64	9.24	8.56	3.65	3.35	2.4	0.5	0.2	6.9	0.22
M6 × 1	6.00	5.82	10.00	9.64	11.55	10.80	4.15	3.85	2.0	0.5	0.2	8.9	0.25
M8 × 1.25	8.00	7.78	13.00	12.57	15.01	14.08	5.50	5.10	3.7	0.6	0.3	11.6	0.28
M10 × 1.5	10.00	9.78	15.00	14.57	17.32	16.32	6.63	6.17	4.5	0.6	0.3	13.6	0.31
M10 × 1.5	10.00	9.78	16.00	15.57	18.48	17.43	6.63	6.17	4.5	0.6	0.3	14.6	0.32
M12 × 1.75	12.00	11.73	18.00	17.57	20.78	19.68	7.76	7.24	5.2	0.6	0.3	16.6	0.35
M14 × 2	14.00	13.73	21.00	20.16	24.25	22.58	9.09	8.51	6.2	0.6	0.3	19.6	0.39
M16 × 2	16.00	15.73	24.00	23.16	27.71	25.94	10.32	9.68	7.0	0.8	0.4	22.5	0.43
M20 × 2.5	20.00	19.67	30.00	29.16	34.64	32.66	12.88	12.12	8.8	0.8	0.4	27.7	0.53
M24 × 3	24.00	23.67	36.00	35.00	41.57	39.20	15.44	14.46	10.5	0.8	0.4	33.2	0.63
See para.	6.2		...		6.1.3, 6.1.4		6.1.2		6.1.3	...		6.1.6	6.1.6

GENERAL NOTE: See para. 6.2 of General Data.

6 GENERAL DATA

6.1 Heads

6.1.1 Top of Head. The head geometry shall be full-formed or indented at the manufacturer's option. The top of the head shall be chamfered or rounded. The diameter of the chamfer circle or start of rounding shall be equal to the maximum width across flats, S max., within a tolerance of −15%.

6.1.2 Head Height. The head height, K, is the distance, as measured parallel to the axis of the screw, from the top of the head to the plane of the bearing surface. (See para. 6.10.)

6.1.3 Wrenching Height. The wrenching height, K_w, is the distance, measured at a corner of the hex, from the plane of the bearing surface to the last plane of full formed hex (i.e., the plane closest to the top of the head at which the width across corners of the hex is within its specified limits). The width across corners, E, when measured within the wrenching height, K_w, shall be within the limits specified in Table 1.

6.1.4 Corner Fill. The rounding due to lack of fill at the six corners of the head shall be reasonably uniform.

6.1.5 True Position of the Head at Maximum Material Condition. At maximum material condition, the axis of the hexagon head shall be within a positional tol-

Copyright ASME International
Provided by IHS under license with ASME
No reproduction or networking permitted without license from IHS
Not for Resale

Table 2 Tolerance Zone

Nominal Screw Diameter and Thread Pitch	Position of Head-to-Shank Tolerance Zone Diameter at MMC	D_{si} Minimum Body Diameter for Product Threaded to Head [Note (1)]	Position of Body-to-Thread Tolerance Zone Diameter at MMC
M5 × 0.8	0.35	4.36	0.48
M6 × 1	0.44	5.21	0.58
M8 × 1.25	0.56	7.04	0.58
M10 × 1.5	0.70	8.86	0.58
M12 × 1.75	0.84	10.68	0.70
M14 × 2	0.98	12.50	0.70
M16 × 2	1.12	14.50	0.70
M20 × 2.5	1.40	18.16	0.84
M24 × 3	1.68	21.80	0.84

NOTE:
(1) D_{si} is the minimum pitch diameter.

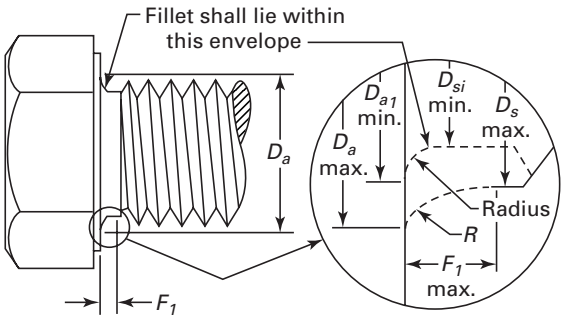

Fig. 2 Fillet Details for Short Screws

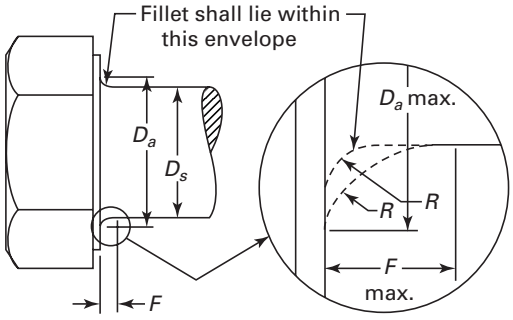

Fig. 3 Fillet Details for Long Screws

erance zone of the diameter specified in Table 2 with respect to the axis of the shank (derived median line) over a length under the head equal to the nominal screw diameter, D.

6.1.6 Bearing Surface. The bearing surface shall be flat and washer-faced. The diameter of the washer face, measured at 0.1 mm above the bearing surface, shall not exceed the actual width across flats, S, nor be less than the specified minimum washer face diameter, D_w min. The circular runout of the bearing surface with respect to the axis of the shank (derived median line) shall be within the full indicator movement (FIM) as specified in Table 1. The measurement of bearing surface runout shall be made as close to the periphery of the bearing surface as possible while the screw is held in a collet or other gripping device at the distance of one diameter under the head.

6.1.7 Underhead Fillet. The fillet configuration at the junction of the head and shank shall be as shown in Figs. 2 and 3, and shall have limits as specified in Table 3. The fillet shall be a smooth and continuous curve fairing smoothly into the bearing surface and the shank within the limits specified. No radius in the fillet contour shall be less than R minimum.

6.2 Body Diameter

(a) The diameter of the body on screws that are not threaded full length shall be within the limits of D_s, specified in Table 1, unless the purchaser specifies screws with *reduced diameter body*. For screws threaded full length, the diameter of the unthreaded shank under the head shall not exceed the specified maximum body diameter, D_s, nor be less than the minimum body diameter, D_{si}, given in Table 2.

(b) Screws may be obtained with reduced diameter body as specified in Table 4. The grip gaging length, L_g max. shall be as specified in Table 5. The diameter, D_s, and length, L_{sh}, of the shoulder shall be as specified in Table 4. Reduced diameter body screws with nominal lengths shorter than 4 times their nominal diameter are not recommended.

Copyright ASME International
Provided by IHS under license with ASME
No reproduction or networking permitted without license from IHS
Not for Resale

Table 3 Dimensions of Underhead Fillets

Nominal Screw Diameter and Thread Pitch	Fillet Transition Diameter		Fillet Length		Fillet Radius, R
	For Short Screws, D_{a1}	For Short and Long Screws, D_a	For Short Screws, F_1	For Long Screws, F	For Short and Long Screws
	Min.	Max.	Max.	Max.	Min.
M5 × 0.8	5.1	5.7	0.7	1.2	0.2
M6 × 1	6.2	6.8	0.9	1.4	0.3
M8 × 1.25	8.3	9.2	1.1	2.0	0.4
M10 × 1.5	10.2	11.2	1.2	2.0	0.4
M12 × 1.75	12.2	13.7	1.3	3.0	0.6
M14 × 2	14.1	15.7	1.4	3.0	0.6
M16 × 2	16.5	17.7	1.6	3.0	0.6
M20 × 2.5	20.7	22.4	2.1	4.0	0.8
M24 × 3	24.5	26.4	2.3	4.0	0.8

GENERAL NOTES:
(a) Short screws are screws that are threaded full length.
(b) Values of D_{si} are given in Table 2.

Table 4 Dimensions of Reduced Body Diameter With Shoulder

Screw Diameter and Thread Pitch	Shoulder Diameter, D_s		Body Diameter, D_{si}		Shoulder Length, L_{sh}	
	Max.	Min.	Max.	Min.	Max.	Min.
M5 × 0.8	5.00	4.82	4.46	4.36	3.5	2.5
M6 × 1	6.00	5.82	5.39	5.21	4.0	3.0
M8 × 1.25	8.00	7.78	7.26	7.04	5.0	4.0
M10 × 1.5	10.00	9.78	9.08	8.86	6.0	5.0
M12 × 1.75	12.00	11.73	10.95	10.68	7.0	6.0
M14 × 2	14.00	13.73	12.77	12.50	8.0	7.0
M16 × 2	16.00	15.73	14.77	14.50	9.0	8.0
M20 × 2.5	20.00	19.67	18.49	18.16	11.0	10.0
M24 × 3	24.00	23.67	22.13	21.80	13.0	12.0

GENERAL NOTE: Shoulder is mandatory.

6.3 Screw Length

The length, L, of the screw is the distance parallel to the axis of the screw from the underhead bearing surface to the extreme end of the shank. Standard screw lengths are specified in Table 2. Tolerances for screw lengths are given in Table 6.

6.4 Points

The screws shall be pointed. The point shall be either chamfered or rounded at the manufacturer's option. The length of the point to the first full formed thread at major diameter shall not exceed U max., specified in Table 7. A chamfered point shall be chamfered from a diameter equal to, or slightly less than, the thread root diameter, and the end of the screw shall be reasonably square with the axis of the screw, but the slight rim or cup resulting from roll-threading shall be permissible. A rounded point shall have a radius of approximately R_e, specified in Table 7.

6.5 Straightness

At maximum material condition, the axes of the screw body and thread major diameter (derived median line) shall be within a straightness tolerance diameter equal to $0.006L$. A gage and gaging procedure for checking straightness is given in Nonmandatory Appendix A.

Copyright ASME International
Provided by IHS under license with ASME
No reproduction or networking permitted without license from IHS Not for Resale

Table 5 Maximum Grip Gaging Lengths and Minimum Body Lengths

Nominal Diameter and Thread Pitch	M5 × 0.8		M6 × 1		M8 × 1.25		M10 × 1.5		M12 × 1.75		M14 × 2		M16 × 2		M20 × 2.5		M24 × 3	
L Nominal Length	L_g Max.	L_s Min.	L_g Max.	L_s Min.	L_g Max.	L_s Min.	L_g Max.	L_s Min.	L_g Max.	L_s Min.	L_g Max.	L_s Min.	L_g Max.	L_s Min.	L_g Max.	L_s Min.	L_g Max.	L_s Min.
8																		
10																		
12																		
14																		
16																		
20																		
25	9.0	5.0																
30	14.0	10.0	12.0	7.0														
35	19.0	15.0	17.0	12.0														
40	24.0	20.0	22.0	17.0	18.0	11.8												
45	29.0	25.0	27.0	22.0	23.0	16.8	19.0	11.5										
50	34.0	30.0	32.0	27.0	28.0	21.8	24.0	16.5	20.0	11.2								
(55)			37.0	32.0	33.0	26.8	29.0	21.5	25.0	16.2								
60			42.0	37.0	38.0	31.8	34.0	26.5	30.0	21.2	26.0	16.0						
(65)					43.0	36.8	39.0	31.5	35.0	26.2	31.0	21.0	27.0	17.0				
70					48.0	41.8	44.0	36.5	40.0	31.2	36.0	26.0	32.0	22.0				
80					58.0	51.8	54.0	46.5	50.0	41.2	46.0	36.0	42.0	32.0	34.0	21.5		
90							64.0	56.5	60.0	51.2	56.0	46.0	52.0	42.0	44.0	31.5	36.0	21.0
100							74.0	66.5	70.0	61.2	66.0	56.0	62.0	52.0	54.0	41.5	46.0	31.0
110									80.0	71.2	76.0	66.0	72.0	62.0	64.0	51.5	56.0	41.0
120									90.0	81.2	86.0	76.0	82.0	72.0	74.0	61.5	66.0	51.0
130											90.0	80.0	86.0	76.0	78.0	65.5	70.0	55.0
140											100.0	90.0	96.0	86.0	88.0	75.5	80.0	65.0
150													106.0	96.0	98.0	85.5	90.0	75.0

GENERAL NOTES:
(a) L_g is grip gaging length; L_s is body length.
(b) Diameter-length combinations between the thin stepped lines are recommended. Lengths in parentheses are not recommended.
(c) Screws with lengths above the heavy solid line are threaded full length.

Table 6 Length Tolerances

Nominal Length		Nominal Screw Diameter						
over	thru	M5	M6	M8	M10	M12	M14	M16-M24
6	10	± 0.29	± 0.29	± 0.29	± 0.29	. . .	. . .	. . .
10	18	± 0.35	± 0.35	± 0.35	± 0.35	± 0.35	± 0.35	± 0.35
18	30	± 0.42	± 0.42	± 0.42	± 0.42	± 0.42	± 0.42	± 0.42
30	50	± 0.50	± 0.50	± 0.50	± 0.50	± 0.50	± 0.50	± 0.50
50	60	± 1.50	± 0.60	± 0.60	± 0.60	± 0.60	± 0.60	± 0.60
60	80	± 1.50	± 1.50	± 0.60	± 0.60	± 0.60	± 0.60	± 0.60
80	100	± 1.75	± 1.75	± 1.75	± 0.70	± 0.70	± 0.70	± 0.70
100	120	± 1.75	± 1.75	± 1.75	± 1.75	± 0.70	± 0.70	± 0.70
120	140	± 2.00	± 2.00	± 2.00	± 2.00	± 2.00	± 0.80	± 0.80
140	150	± 2.00	± 2.00	± 2.00	± 2.00	± 2.00	± 2.00	± 0.80
150	180	± 2.00	± 2.00	± 2.00	± 2.00	± 2.00	± 2.00	± 2.00
180	250	± 2.30	± 2.30	± 2.30	± 2.30	± 2.30	± 2.30	± 2.30
250	315	± 2.60	± 2.60	± 2.60	± 2.60	± 2.60	± 2.60	± 2.60
315	400	± 2.85	± 2.85	± 2.85	± 2.85	± 2.85	± 2.85	± 2.85
400	500	± 3.15	± 3.15	± 3.15	± 3.15	± 3.15	± 3.15	± 3.15

GENERAL NOTE: All length tolerances are plus and minus (±).

--`,,```,,,,````-`-`,,`,,`,`,,`---

Copyright ASME International
Provided by IHS under license with ASME
No reproduction or networking permitted without license from IHS
Not for Resale

Table 7 Dimensions of Points

Nominal Screw Diameter and Thread Pitch	Point Radius, R_e Approx. [Note (1)]	Point Length, U Max. [Note (2)]
M5 × 0.8	7.0	1.60
M6 × 1	8.4	2.00
M8 × 1.25	11.2	2.50
M10 × 1.5	14.0	3.00
M12 × 1.75	16.8	3.50
M14 × 2	19.6	4.00
M16 × 2	22.4	4.00
M20 × 2.5	28.0	5.00
M24 × 3	33.6	6.00

NOTES:
(1) R_e approx. equals 1.4 times thread major diameter and agrees with ISO 4753.
(2) U max. equals two times the thread pitch.

6.6 Thread Length

The length of thread on screws shall be controlled by the maximum grip length, L_g, and the minimum body length, L_s, as set forth in this section.

6.6.1 Grip Gaging Length, L_g. The grip gaging length, L_g, is the distance, measured parallel to the axis of the screw, from the underhead bearing surface to the face of a noncounterbored or noncountersunk standard GO thread ring gage assembled by hand as far as the thread will permit. For standard diameter-length combinations of screws that are not threaded full length, the values for L_g max. are specified in Table 5. For diameter-length combinations not listed in Table 5, the maximum grip gaging length, as calculated and rounded to one decimal place, shall be equal to the nominal screw length, L, minus the reference nominal thread length, B, as specified in Table 8 (L_g max. = $L - B$). L_g max. shall be used as a criterion for inspection. For screws of nominal lengths, L, that are equal to or shorter than the lengths specified in Table 8 for screws threaded full length, L_g max. = L_u max. as specified in Table 8.

6.6.2 Body Length, L_s. Body length, L_s, is the distance, measured parallel to the axis of the screw, from the underhead bearing surface to the last scratch of thread or top of the extrusion angle, whichever is closest to the head. For standard diameter-length combinations of screws that are not threaded full length, the values of L_s min. are specified in Table 5. For diameter-length combinations not listed in Table 5, the minimum body length, as calculated and rounded to one decimal place, shall be equal to the maximum grip gaging length as computed, minus the transition thread length as specified in Table 8 (L_s min. = L_g max. − X ref.). L_s min. shall be used as a criterion for inspection. For screws that are threaded full length, the distance from the underhead bearing surface to the face of a noncounterbored or noncounter-sunk standard GO thread ring gage assembled by hand as far as the thread will permit shall not exceed the length, L_u, as specified in Table 8. For screws threaded full length, the last scratch of thread must not be within the maximum fillet length, F_1 max., as specified in Table 3: L_u min. = F_1 max.

6.6.3 Thread Length, B. Thread length, B, a reference dimension, as specified in Table 8, is intended for calculation purposes only, and is the distance, measured parallel to the axis of the screw, from the extreme end of the screw to the last complete (full form) thread.

6.6.4 Transition Thread Length, X. The transition thread length, X, as specified in Table 8, is a reference dimension intended for calculation purposes only. It includes the length of incomplete threads and tolerances

Table 8 Thread Lengths

Nominal Screw Diameter and Thread Pitch	Thread Length, B (Ref.)			Transition Thread Length, X (Ref.)	Unthreaded Length Under Head – for Short Screws, L_u				
	Screw Lengths ≤ 125	Screw Lengths > 125 and ≤ 200	Screw Lengths > 200		Screw Lengths Under	L_u Max.	Screw Lengths At Least	Screw Lengths Under	L_u Max.
M5 × 0.8	16	22	35	4.0	10	1.2	10	25	2.4
M6 × 1	18	24	37	5.0	12	1.5	12	30	3.0
M8 × 1.25	22	28	41	6.2	16	1.9	16	40	4.0
M10 × 1.5	26	32	45	7.5	20	2.2	20	45	4.5
M12 × 1.75	30	36	49	8.8	24	2.6	24	50	5.3
M14 × 2	34	40	53	10.0	28	3.0	28	60	6.0
M16 × 2	38	44	57	10.0	32	3.0	32	65	6.0
M20 × 2.5	46	52	65	12.5	40	3.8	40	80	7.5
M24 × 3	54	60	73	15.0	. . .	. . .	. . .	90	9.0

Copyright ASME International
Provided by IHS under license with ASME
No reproduction or networking permitted without license from IHS
Not for Resale

on grip gaging length and body length. The transition from full thread to incomplete thread shall be smooth and uniform. The major diameter of the incomplete threads shall not exceed the actual major diameter of the complete (full form) threads. The transition threads shall have a rounded root contour.

6.6.5 Position of Body-to-Thread. For products with cut threads, at maximum material condition, the axis of the screw body, D_s (derived median line), over a length equal to the nominal screw diameter from the last scratch of thread, shall be within the positional tolerance zone diameter specified in Table 2 with respect to the axis of the thread, over a length equal to the nominal screw diameter from the last complete thread. A gage and gaging procedure for checking body position is given in Nonmandatory Appendix B.

6.7 Screw Threads

6.7.1 Thread Series and Tolerance Class. Screw threads shall be general purpose metric screw threads with tolerance Class 6g conforming to ASME B1.13M, unless otherwise specified by the purchaser. For screws with additive finish, size limits for tolerance Class 6g apply prior to coating, and the thread after coating is subject to acceptance using a basic (tolerance position *h*) size GO thread gage and tolerance Class 6g thread gage for either minimum material LO or NOT GO.

6.7.2 Thread Gaging. Unless otherwise specified, dimensional acceptability of screw threads shall be based on System 21 of ASME B1.3M.

6.8 Materials and Mechanical Properties

6.8.1 Steel. Unless otherwise specified, steel screws shall conform to the requirements of ASTM F 568M.

6.8.2 Corrosion-Resistant Steels. Unless otherwise specified, screws made of corrosion-resistant steels shall conform to the requirements of ASTM F 738M.

6.8.3 Nonferrous Metals. Unless otherwise specified, nonferrous screws shall conform to the requirements of ASTM F 468M.

6.9 Finish

Unless otherwise specified, screws shall be supplied with a natural (as processed) finish, unplated or uncoated, in a clean condition and lightly oiled.

6.10 Identification Symbols

Identification marking symbols shall be on top of the screw heads and shall be raised or indented at the manufacturer's option, unless otherwise specified at the time of ordering. Marking shall be legible to the unaided eye with the exception of corrective lenses. When raised, markings shall project not less than 0.1 mm for M14 and smaller screws, and 0.3 mm for M16 and larger screws above the surface of the head, and the total head height (head plus markings) shall not exceed the specified maximum head height plus 0.1 mm for M5 and M6 screws, 0.2 mm for M8 and M10 screws, 0.3 mm for M12 and M14 screws, and 0.4 mm for M16 and larger screws. When indented, the depth of the marking shall not reduce the load carrying capability of the screw.

6.10.1 Property Class Symbols. Each screw shall be marked in accordance with the applicable specification for its chemical and mechanical requirements.

6.10.2 Source Symbols. Each screw shall be marked to identify its source (manufacturer or private label distributor).

6.11 Workmanship

Screws shall be free from surface imperfections such as burrs, seams, laps, loose scale, or other irregularities that could affect serviceability. When control of surface discontinuities is required, the purchaser shall specify conformance to ASTM F 788/F 788M.

6.12 Inspection and Quality Assurance

Unless otherwise specified, acceptability of screws shall be determined in accordance with ASME B18.18.1.

6.13 Dimensional Conformance

Products shall conform to the specified dimensions.

(a) Unless otherwise specified, the following provisions shall apply for inspection of dimensional characteristics. The designated characteristics are defined within the following table and shall be inspected in accordance with ASME B18.18.2 to the inspection level shown.

Characteristic	Inspection Level
Thread acceptability	C
Head width across corners, E	C
Grip length, L_g max.	C
Screw length, L	C
Visual inspection [Note (1)]	C

NOTE:

(1) Visual Inspection shall include property class marking, source marking, fillet, and workmanship.

If verifiable in-process inspection is used, inspection sample sizes and reporting shall be in accordance with the applicable ASME, ASTM, or SAE quality system consensus standard.

(b) For nondesignated characteristics, the provisions of ASME B18.18.1 shall apply. Should a nondesignated dimension be detemined to be outside its specified lim-

Copyright ASME International
Provided by IHS under license with ASME
No reproduction or networking permitted without license from IHS
Not for Resale

its, it shall be deemed conforming to this Standard if the user, who is the installer, accepts the dimension, based on fit, form, and function considerations.

6.14 Clearance Holes

The recommended sizes of clearance holes in material to be assembled using formed hex screws are the normal series given in ASME B18.2.8.

6.15 Designation

(a) Formed hex screws shall be designated by the following data, preferably in the sequence shown: product name; designation of the standard; nominal diameter and thread pitch; nominal length; reduced body, if required; 15 mm WAF for M10, if required; steel property class or material identification; and protective coating, if required.

NOTE: It is common practice in ISO standards to omit thread pitch from the product size designation when screw threads are the metric coarse thread series (e.g., M10 is M10 × 1.5).

EXAMPLES:

(1) Formed hex screw, ASME B18.2.3.2M, M10 × 1.5 × 50, class 9.8, zinc plated to ASTM F 1941M Fe/Zn5C
(2) Formed hex screw, ASME B18.2.3.2M, M6 × 1 × 35, silicon bronze, ASTM F 468M grade 651

(b) For a recommended part identifying number system, see ASME B18.24.

Copyright ASME International
Provided by IHS under license with ASME
No reproduction or networking permitted without license from IHS
Not for Resale

NONMANDATORY APPENDIX A
SCREW STRAIGHTNESS GAGE AND GAGING PROCEDURE

The conformance of screws to shank straightness or camber limitations set forth in para. 6.5 may be checked by using the gage illustrated below in accordance with the following procedure:

Allowable total camber on the product to be inspected is calculated in accordance with para. 6.5. The total camber thus derived is added to the specified maximum body diameter and the movable rail of gage is adjusted to provide a parallel space between the rails equal to this distance by obtaining common readings on both micrometer heads. The movable rail is then locked in place by tightening securing screws. The gage length is equal to or longer than the screw length.

The product is then inserted between rails and is rotated by hand through full 360 deg. Any interference occurring between the product and the gage that is sufficient to prevent rotation shall indicate excessive camber.

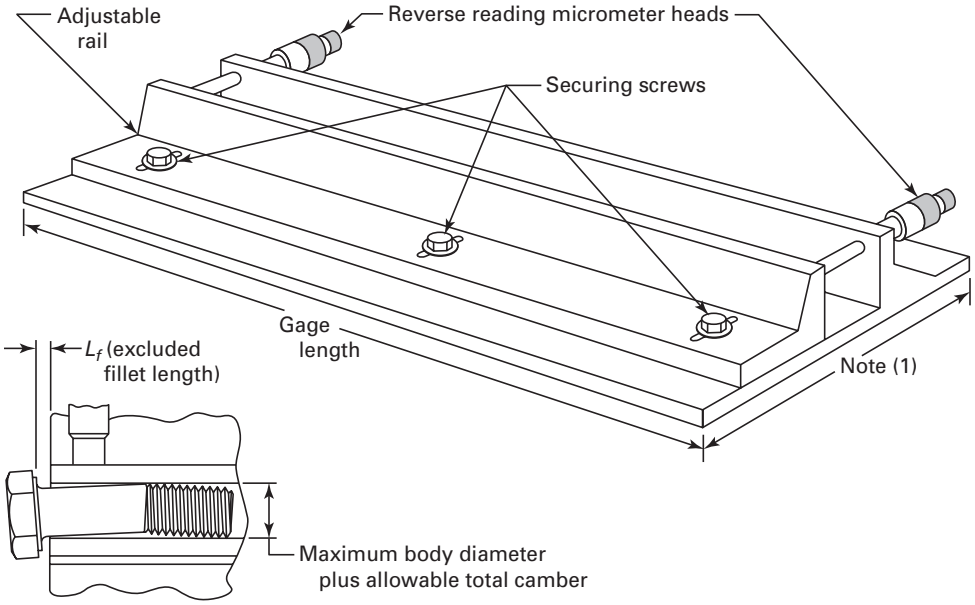

NOTE:
(1) The width of the gage must be adequate for the size of fastener being gaged.

Fig. A-1 Typical Straightness Gage

--`,,```,,,,````-`-`,,`,,`,`,,`---

Copyright ASME International
Provided by IHS under license with ASME
No reproduction or networking permitted without license from IHS

Not for Resale

NONMANDATORY APPENDIX B
BODY POSITION GAGES AND GAGING PROCEDURES

Gages that may be used for checking position of the screw body with respect to the thread are illustrated below.

In the lower construction, GO thread ring gage *A* is centered on sleeve *B* by means of the positioning plug, *E*, and is secured in position by attachment screws *C*. The ring gage is set to the maximum pitch diameter of the screw thread, Class 6h.

For position of body-to-thread per para. 6.6.5, gage length L_h, is equal to the nominal screw diameter, *D*, plus the transition thread length, *X*, i.e.,

$$L_h = D + X$$

Diameter D_h, of the counterbore or hole in sleeve(s), equals the nominal screw diameter, *D*, plus the positional tolerance, *T* (see Table 2), i.e.,

$$D_h = D + T$$

The screw is screwed by hand into the GO thread gage for the full length of the thread.

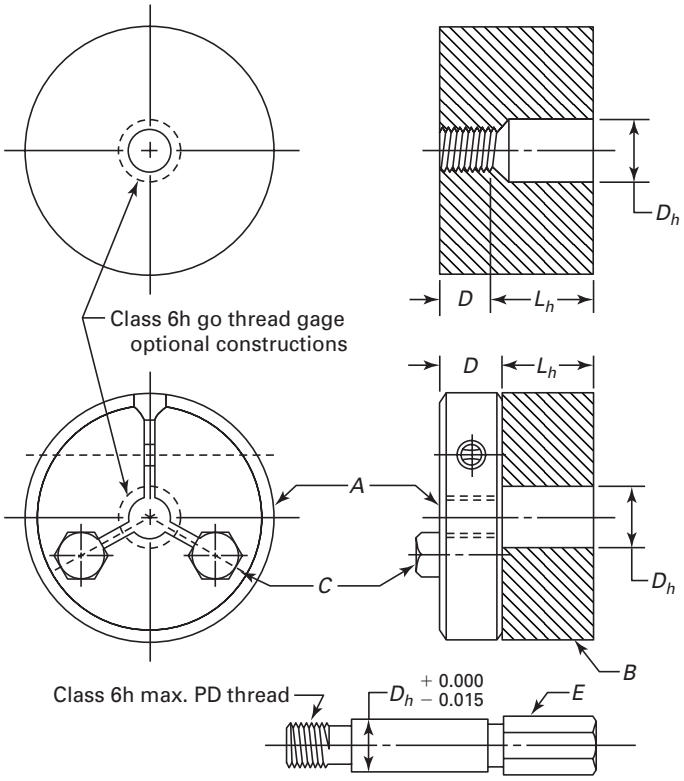

Fig. B-1 Typical Gage

Copyright ASME International
Provided by IHS under license with ASME
No reproduction or networking permitted without license from IHS
Not for Resale

NONMANDATORY APPENDIX C
COMPARISON WITH ISO STANDARDS

This Appendix summarizes the technical differences between ASME B18.2.3.2M-2005 and ISO 4015 and related ISO standards.

Formed hex screw characteristics, as presented in this standard, are harmonized, to the extent possible, with ISO 4015. However, ISO 4015 only includes products having a reduced body without a shoulder. This standard includes formed hex screws with full body or a reduced body with shoulder. Thus, the two standards do not offer interchangeable products. However, in the size range M5 through M20, certain characteristics are in agreement. They include

(a) diameters and thread pitches
(b) maximum fillet transition diameters
(c) widths across flats (see 6.2)
(d) bearing surface diameters
(e) nominal head heights
(f) thread lengths
(g) thread dimensions

Reduced body diameter limits specified in Table 4 are not the same as ISO 4015. ISO does not, however, include the M24 as standard and does include an M3 and M4. Other features not in agreement include the product name, washer face, maximum height of head, position of markings, straightness requirements, and other tolerances.

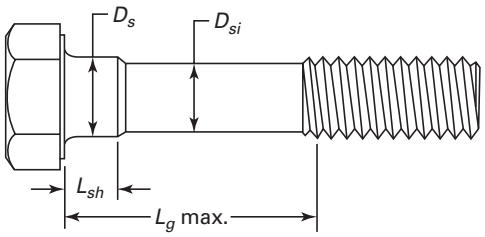

Cut Thread

Copyright ASME International
Provided by IHS under license with ASME
No reproduction or networking permitted without license from IHS
Not for Resale

Copyright ASME International
Provided by IHS under license with ASME
No reproduction or networking permitted without license from IHS
Not for Resale

B18 AMERICAN NATIONAL STANDARDS FOR BOLTS, NUTS, RIVETS, SCREWS, WASHERS, AND SIMILAR FASTENERS

Small Solid Rivets B18.1.1-1972 (R2001)
Large Rivets B18.1.2-1972 (R2001)
Metric Small Solid Rivets B18.1.3M-1983 (R2001)
Square and Hex Bolts and Screws (Inch Series) B18.2.1-1996
Square and Hex Nuts (Inch Series) B18.2.2-1987 (R1999)
Metric Hex Cap Screws B18.2.3.1M-1999
Metric Formed Hex Screws B18.2.3.2M-2005
Metric Heavy Hex Screws B18.2.3.3M-1979 (R2001)
Metric Hex Flange Screws B18.2.3.4M-2001
Metric Hex Bolts B18.2.3.5M-1979 (R2001)
Metric Heavy Hex Bolts B18.2.3.6M-1979 (R2001)
Metric Heavy Hex Structural Bolts B18.2.3.7M-1979 (R2001)
Metric Hex Lag Screws B18.2.3.8M-1981 (R1999)
Metric Heavy Hex Flange Screws B18.2.3.9M-2001
Square Head Bolts (Metric Series) B18.2.3.10M-1996 (R2003)
Metric Hex Nuts, Style 1 . . . . . B18.2.4.1M-2002
Metric Hex Nuts, Style 2 . . . . . B18.2.4.2M-2005
Metric Slotted Hex Nuts B18.2.4.3M-1979 (R2001)
Metric Hex Flange Nuts B18.2.4.4M-1982 (R1999)
Metric Hex Jam Nuts B18.2.4.5M-1979 (R2003)
Metric Heavy Hex Nuts B18.2.4.6M-1979 (R2003)
Fasteners for Use in Structural Applications B18.2.6-1996 (R2004)
Metric 12-Spline Flange Screws B18.2.7.1M-2002
Clearance Holes for Bolt, Screws, and Studs B18.2.8-1999
Socket Cap, Shoulder, and Set Screws, Hex and Spline Keys (Inch Series) B18.3-2003
Socket Head Cap Screws (Metric Series) B18.3.1M-1986 (R2002)
Metric Series Hexagon Keys and Bits B18.3.2M-1979 (R2003)
Hexagon Socket Head Shoulder Screws (Metric Series) B18.3.3M-1986 (R2002)
Hexagon Socket Button Head Cap Screws (Metric Series) B18.3.4M-1986 (R2002)
Hexagon Socket Flat Countersunk Head Cap Screws (Metric Series) B18.3.5M-1986 (R2002)
Metric Series Socket Set Screws B18.3.6M-1986 (R2002)
Round Head Bolts (Inch Series) B18.5-1990 (R2003)
Metric Round Head Short Square Neck Bolts B18.5.2.1M-1996 (R2003)
Metric Round Head Square Neck Bolts B18.5.2.2M-1982 (R2000)
Round Head Square Neck Bolts With Large Head (Metric Series) B18.5.2.3M-1990 (R2003)
Wood Screws (Inch Series) B18.6.1-1981 (R2003)
Slotted Head Cap Screws, Square Head Set Screws, and Slotted Headless Set Screws (Inch Series) B18.6.2-1998
Machine Screws and Machine Screw Nuts B18.6.3-2003
Thread Forming and Thread Cutting Tapping Screws and Metallic Drive Screws (Inch Series) B18.6.4-1998
Metric Thread-Forming and Thread-Cutting Tapping Screws B18.6.5M-2000
Metric Machine Screws B18.6.7M-1999
General Purpose Semi-Tubular Rivets, Full Tubular Rivets, Split Rivets and Rivet Caps B18.7-1972 (R2001)
Metric General Purpose Semi-Tubular Rivets B18.7.1M-1984 (R2000)
Clevis Pins and Cotter Pins (Inch Series) B18.8.1-1994 (R2000)
Taper Pins, Dowel Pins, Straight Pins, Grooved Pins, and Spring Pins (Inch Series) B18.8.2-2000
Spring Pins: Coiled Type, Spring Pins: Slotted, Machine Dowel Pins: Hardened Ground, and Grooved Pins (Metric Series) . . B18.8.100M-2000
Cotter Pins, Headless Clevis Pins, and Headed Clevis Pins (Metric Series) B18.8.200M-2000
Plow Bolts (Inch Series) B18.9-1996 (R2003)
Track Bolts and Nuts B18.10-1982 (R2000)
Miniature Screws B18.11-1961 (R2000)
Glossary of Terms for Mechanical Fasteners B18.12-2001
Screw and Washer Assemblies — Sems (Inch Series) B18.13-1996 (R2003)
Screw and Washer Assemblies: Sems (Metric Series) B18.13.1M-1998 (R2003)

Copyright ASME International
Provided by IHS under license with ASME
No reproduction or networking permitted without license from IHS
Not for Resale

Forged Eyebolts B18.15-1985 (R2003)
Metric Lifting Eyes B18.15M-1998 (R2004)
Prevailing-Torque Type Steel Metric Hex Nuts and Hex Flange Nuts B18.16M-2004
Inspection and Quality Assurance for General Purpose Fasteners B18.18.1M-1987 (R1999)
Inspection and Quality Assurance for High-Volume Machine Assembly Fasteners B18.18.2M-1987 (R1999)
Inspection and Quality Assurance for Special Purpose Fasteners B18.18.3M-1987 (R1999)
Inspection and Quality Assurance for Fasteners for Highly Specialized Engineered Applications B18.18.4M-1987 (R1999)
Inspection and Quality Assurance Plan Requiring In-Process Inspection and Controls B18.18.5M-1998 (R2003)
Quality Assurance Plan for Fasteners Produced in a Third Party Accreditation System B18.18.6M-1998 (R2003)
Quality Assurance Plan for Fasteners Produced in a Customer Approved Control Plan B18.18.7M-1998 (R2003)
Lock Washers (Inch Series) B18.21.1-1999
Lock Washers (Metric Series) B18.21.2M-1999
Metric Plain Washers B18.22M-1981 (R2000)
Plain Washers B18.22.1-1965 (R2003)
Part Identifying Number (PIN) Code System for B18 Fastener Products B18.24-2004
Square and Rectangular Keys and Keyways B18.25.1M-1996 (R2003)
Woodruff Keys and Keyways B18.25.2M-1996 (R2003)
Square and Rectangular Keys and Keyways: Width Tolerances and Deviations Greater Than Basic Size B18.25.3M-1998 (R2003)
Tapered and Reduced Cross Section Retaining Rings (Inch Series) B18.27-1998
Helical Coil Screw Thread Inserts) — Free Running and Screw Locking (Inch Series) B18.29.1-1993 (R2002)
Open-End Blind Rivets With Break Mandrels (Metric Series) B18.30.1M-2000

The ASME Publications Catalog shows a complete list of all the Standards published by the Society. For a complimentary catalog, or the latest information about our publications, call 1-800-THE-ASME (1-800-843-2763).

Copyright ASME International
Provided by IHS under license with ASME
No reproduction or networking permitted without license from IHS
Not for Resale

ASME B18.2.3.2M-2005

ISBN 0-7918-2967-7





M10105

--`,,```,,,,````-`-`,,`,,`,`,,`---

Copyright ASME International
Provided by IHS under license with ASME
No reproduction or networking permitted without license from IHS

Not for Resale