STD.ASME B18.2.3.1M-ENGL 1999 0759670 0614132 429

ASME B18.2.3.1M-1999
[Revision of ANSI B18.2.3.1M-1979 (R1995)]

METRIC HEX CAP SCREWS

AN AMERICAN NATIONAL STANDARD

The American Society of Mechanical Engineers

Copyright ASME International
Provided by IHS under license with ASME
No reproduction or networking permitted without license from IHS

Not for Resale



The American Society of Mechanical Engineers

AN AMERICAN NATIONAL STANDARD

METRIC HEX CAP SCREWS

ASME B18.2.3.1M-1999

[Revision of ANSI B18.2.3.1M-1979 (R1995)]

Copyright ASME International
Provided by IHS under license with ASME
No reproduction or networking permitted without license from IHS

Not for Resale

Date of Issuance: December 31, 1999

The 1998 edition of this Standard is being issued with an automatic addenda subscription service. The use of an addenda allows revisions made in response to public review comments or committee actions to be published as necessary. The next edition of this Standard is scheduled for publication in 2004.

ASME is the registered trademark of The American Society of Mechanical Engineers.

This code or standard was developed under procedures accredited as meeting the criteria for American National Standards. The Standards Committee that approved the code or standard was balanced to assure that individuals from competent and concerned interests have had an opportunity to participate. The proposed code or standard was made available for public review and comment that provides an opportunity for additional public input from industry, academia, regulatory agencies, and the public-at-large.

ASME does not "approve," "rate," or "endorse" any item, construction, proprietary device, or activity.

ASME does not take any position with respect to the validity of any patent rights asserted in connection with any items mentioned in this document, and does not undertake to insure anyone utilizing a standard against liability for infringement of any applicable letters patent, nor assume any such liability. Users of a code or standard are expressly advised that determination of the validity of any such patent rights, and the risk of infringement of such rights, is entirely their own responsibility.

Participation by federal agency representative(s) or person(s) affiliated with industry is not to be interpreted as government or industry endorsement of this code or standard.

ASME accepts responsibility for only those interpretations of this document issued in accordance with the established ASME procedures and policies, which precludes the issuance of interpretations by individuals.

No part of this document may be reproduced in any form,
in an electronic retrieval system or otherwise,
without the prior written permission of the publisher.

The American Society of Mechanical Engineers
Three Park Avenue, New York, NY 10016-5990

Copyright © 1999 by
THE AMERICAN SOCIETY OF MECHANICAL ENGINEERS
All Rights Reserved
Printed in U.S.A.

Copyright ASME International
Provided by IHS under license with ASME
No reproduction or networking permitted without license from IHS

Not for Resale

FOREWORD

American National Standards Committee B18 for the standardization of bolts, screws, nuts, rivets, and similar fasteners was organized in March of 1922, as Sectional Committee B18 under the aegis of the American Engineering Standards Committee (later the American Standards Association, then the United States of America Standards Institute and, as of October 6, 1969, the American National Standards Institute, Inc.), with the Society of Automotive Engineers and the American Society of Mechanical Engineers as joint sponsors. Subcommittee 2 was subsequently established and charged with the responsibility for technical content of standards covering wrench head bolts and nuts.

At its meeting on December 4, 1974, Committee B18 authorized preparation of a series of standards for metric fasteners. Subcommittee 2 was assigned responsibility for developing standards for metric hex bolts, screws, and nuts. On September 22, 1976, Subcommittee 2 organized the contents of a standard covering eight different hex head screw and bolt products. Actual drafting was postponed until ISO/TC2 could reach final decisions relating to the basic dimensions and characteristics of hex bolts, screws, and nuts. At ISO/TC2 meetings held in April of 1977, final actions were taken. Committee B18 affirmed the TC2 decisions at a meeting on June 29, 1977, and drafting of this Standard was started.

Committee B18, in February of 1978, established a cooperative program with the Department of Defense to draft American National Standards for metric fasteners in such a way that they could be used directly by the Government for procurement purposes. The Department of Defense requested that each of the eight products be covered in separate standards, and Subcommittee 2 accepted this approach at its meeting on June 27, 1978.

This Standard was approved by letter ballot of Committee B18 on September 15, 1978, and was subsequently approved by the secretariat and submitted to the American National Standards Institute for designation as an American National Standard. This was granted on April 26, 1979. B18.2.3.1M was subsequently reaffirmed in 1989 and again in 1995.

In 1997, a revision was intiated to try and align this Standard with its ISO counterpart. A letter ballot, which closed in November of 1998, was not approved and in early December of 1998, Subcommittee 2 met to resolve the negatives. As part of the resolution of these negatives, it was agreed to include in this Foreword a summary of key changes to this Standard. The following is that summary:

It was made clear in para. 1.4.1 that all dimensions in this Standard apply before any coating has been applied. The washer face diameter is now to be inspected a 0.1 mm above the bearing plane and not at midthickness as it was previously. The length of point was redefined, including a new method for checking an increased maximum point length defined in para. 2.5 and Table 5. Screw straightness, which formerly was checked with a sleeve gage, is now checked with a rail gage as established in para. 2.6. The position of body-to-thread, which is checked with a sleeve gage, now applies only to cut threads as established in para. 2.7.6, with new tolerance zone values shown in Table 1.

Grip length and body length were revised to correspond to the ISO standard. This results in the following standard diameter/length combinations being fully threaded and not partially threaded as they were previously:

Copyright ASME International
Provided by IHS under license with ASME
No reproduction or networking permitted without license from IHS
Not for Resale

M8 × 35	M20 × 70	M42 × 130	M64 × 200	M90 × 300
M10 × 40	M24 × 80	M42 × 120	M72 × 260	M90 × 280
M12 × 45	M30 × 100	M48 × 160	M72 × 240	M90 × 260
M14 × 50	M36 × 110	M48 × 150	M72 × 220	M100 × 340
M14 × 55	M36 × 120	M56 × 200	M80 × 280	M100 × 320
M16 × 55	M36 × 130	M56 × 180	M80 × 260	M100 × 300
M16 × 60	M42 × 150	M64 × 240	M80 × 240	M100 × 280
M20 × 65	M42 × 140	M64 × 220	M90 × 320	

For screws threaded full length, the grip length was increased approximately to 3 times pitch from 2.5 times pitch (see Table 6).

The previous requirement for a controlled root radius in the runout section of the thread on products of Property Class 10.9 or greater was replaced by a requirement for a rounded root contour included in para. 2.7.5. Quality assurance and dimensional conformance have been specified and included in paras. 2.13 and 2.14, respectively. Appendix IV provides a detailed comparison of product characteristics in this Standard as compared to those of ISO.

Users of this Standard are urged to review its contents carefully so that no confusion exists with the provisions of the previous editions of this Standard.

This revision was approved as an American National Standard on May 10, 1999.

Copyright ASME International
Provided by IHS under license with ASME
No reproduction or networking permitted without license from IHS
Not for Resale

ASME B18 STANDARDS COMMITTEE
Standardization of Bolts, Nuts, Rivets, Screws, Washers, and Similar Fasteners

(The following is the roster of the Committee at the time of approval of this Standard.)

OFFICERS

D. A. Clever, *Chair*
R. D. Strong, *Vice Chair*
S. W. Vass, *Vice Chair*
R. L. Crane, *Secretary*

COMMITTEE PERSONNEL

J. C. Akins, Safety Socket Screw Corp.
J. Altman, Rotor Clip Co.
J. H. Slass, *Alternate,* Rotor Clip
J. B. Belford, Lawson Products Inc.
D. Broomfield, Illinois Tool Works Inc.
J. A. Buda, SPS Technologies
D. A. Clever, Deere and Co.
T. Collier, Cam-Tech Industries Inc.
R. L. Crane, The American Society of Mechanical Engineers
A. C. DiCola, Wrought Washer Co.
A. Dinh, Defense Industrial Supply Center
W. D. Downing, Emhart Heli-Coil
B. A. Dusina, Federal Screw Works
D. S. George, Ford Motor Co.
D. L. Drobnich, *Alternate,* Ford Motor Co.
J. Greenslade, Greenslade & Co.
B. Hasiuk, Defense Industrial Supply Center
A. Herskovitz, Consultant
A. C. Hood, ACH Technologies
J. Hubbard, Rockford Fastener, Inc.
F. W. Kern, Consultant
J. F. Koehl, Spirol International Corp.
W. H. Kopke, ITW Shakeproof Assembly Corp.
J. G. Langenstein, Consultant
M. Levinson, ITW Shakeproof
L. L. Lord, Caterpillar, Inc.
A. D. McCrindle, Genfast Manufacturing Co.
K. E. McCullough, Consultant
R. F. Novotny, Camcar Decorah Operations
M. D. Prasad, General Motors Corp.
W. Schevey, BGM Fastener Co., Inc.
R. D. Strong, General Motors Corp.
J. F. Sullivan, National Fasteners Distribution Association
R. L. Tennis, Caterpillar, Inc.
S. W. Vass, Industrial Fasteners Institute
C. B. Wackrow, MNP Corp.
R. G. Weber, Fairfield University School of Engineering

Copyright ASME International
Provided by IHS under license with ASME
No reproduction or networking permitted without license from IHS
Not for Resale

W. K. Wilcox, Naval Sea Systems Command
C. J. Wilson, Industrial Fasteners Institute

SUBCOMMITTEE 2 — EXTERNAL DRIVE FASTENERS

S. W. Vass, *Chair,* Lake Erie Screw Corp.
R. L. Crane, *Secretary,* The American Society of Mechanical Engineers
D. Broomfield, Illinois Tool Works, Inc.
R. M. Byrne, Trade Assoc. Management, Inc.
D. A. Clever, Deere and Co.
A. P. Cockman, Ford Motor Co.
R. J. Corbett, Huck International Industrial Fasteners
A. Dinh, Defense Industrial Supply Center
D. S. George, Ford Motor Co.
J. Greenslade, Greenslade & Co.
A. Herskovitz, Consultant
M. W. Holubecki, Electric Boat Corp.
J. Hubbard, Rockford Fastener, Inc.
D. F. Kattler, SPS Technologies
L. L. Lord, Caterpillar, Inc.
A. D. McCrindle, Genfast Mannufacturing Co.
K. E. McCullough, Consultant
J. A. Schlink, Caterpillar, Inc.
R. L. Tennis, Caterpillar, Inc.
C. B. Wackrow, MNP Corp.
W. K. Wilcox, Naval Sea System Command
C. J. Wilson, Industrial Fasteners Institute

Copyright ASME International
Provided by IHS under license with ASME
No reproduction or networking permitted without license from IHS
Not for Resale

CORRESPONDENCE WITH THE B18 COMMITTEE

General. ASME Standards are developed and maintained with the intent to represent the consensus of concerned interests. As such, users of this Standard may interact with the Committee by requesting interpretations, proposing revisions, and attending Committee meetings. Correspondence should be addressed to:

Secretary, B18 Main Committee
The American Society of Mechanical Engineers
Three Park Avenue
New York, NY 10016-5990

Proposing Revisions. Revisions are made periodically to the Standard to incorporate changes that appear necessary or desirable, as demonstrated by the experience gained from the application of the Standard. Approved revisions will be published periodically.

The Committee welcomes proposals for revisions to this Standard. Such proposals should be as specific as possible, citing the paragraph number(s), the proposed wording, and a detailed description of the reasons for the proposal, including any pertinent documentation.

Interpretations. Upon request, the B18 Committee will render an interpretation of any requirement of the Standard. Interpretations can only be rendered in response to a written request sent to the Secretary of the B18 Main Committee.

The request for interpretation should be clear and unambiguous. It is further recommended that the inquirer submit his/her request in the following format:

Subject:	Cite the applicable paragraph number(s) and the topic of the inquiry.
Edition:	Cite the applicable edition of the Standard for which the interpretation is being requested.
Question:	Phrase the question as a request for an interpretation of a specific requirement suitable for general understanding and use, not as a request for an approval of a proprietary design or situation. The inquirer may also include any plans or drawings, which are necessary to explain the question; however, they should not contain proprietary names or information.

Requests that are not in this format may be rewritten in the appropriate format by the Committee prior to being answered, which may inadvertently change the intent of the original request.

ASME procedures provide for reconsideration of any interpretation when or if additional information that might affect an interpretation is available. Further, persons aggrieved by an interpretation may appeal to the cognizant ASME Committee or Subcommittee. ASME does not "approve," "certify," "rate," or "endorse" any item, construction, proprietary device, or activity.

Attending Committee Meetings. The B18 Main Committee regularly holds meetings, which are open to the public. Persons wishing to attend any meeting should contact the Secretary of the B18 Main Committee.

Copyright ASME International
Provided by IHS under license with ASME
No reproduction or networking permitted without license from IHS
Not for Resale

CONTENTS

Foreword iii
Standards Committee Roster v
Correspondence With the B18 Committee vii

1 Introductory Notes 1

2 General Data 2

Figures

1 Washer Face Detail 3
2 Fillet Detail for Short Screws 4
3 Fillet Detail for Long Screws 5

Tables

1 Tolerance Zones 3
2 Dimensions of Underhead Fillets 5
3 Dimensions of Hex Cap Screws 6
4 Thread Lengths 8
5 Dimensions of Points 8
6 Maximum Grip Gaging Lengths L_g and Minimum Body Lengths L_s 10
7 Thread Lengths 12

Nonmandatory Appendices

A Screw Straightness Gage and Gaging Procedure 13
B Body Position Gages and Gaging Procedures 15
C Recommended Clearance Holes for Screws 17
D Comparison With ISO Standards 19

Previous page is blank

Copyright ASME International
Provided by IHS under license with ASME
No reproduction or networking permitted without license from IHS
Not for Resale

METRIC HEX CAP SCREWS

1 INTRODUCTORY NOTES

1.1 Scope

1.1.1 This Standard covers the complete general and dimensional data for metric series hex cap screws recognized as American National Standard.

1.1.2 The inclusion of dimensional data in this Standard is not intended to imply that all of the sizes in conjunction with the various options described herein are stock items. Consumers should consult with suppliers concerning lists of stock production hex cap screws.

1.2 Comparison With ISO Standards

1.2.1 Hex cap screws, sizes M5 to M64, as presented in this Standard are harmonized to the extent possible with ISO 4014 or, for short screws threaded full length, with ISO 4017. Dimensional differences between this Standard and ISO 4014 or ISO 4017 are few, relatively minor, and none will affect the functional interchangeability of screws manufactured to the requirements of either.

The following functional characteristics of screws, sizes M5 through M14 with nominal lengths 2 times diameter through 10 times diameter, sizes M16 through M24 with nominal lengths 2 times diameter through 150 mm, and sizes M30 through M64 with nominal lengths 2 times diameter and longer, are in agreement between this Standard and ISO 4014 or ISO 4017, as applicable:

(a) nominal diameters and thread pitches,
(b) body diameters,
(c) widths across flats and corners (see para. 1.2.5),
(d) nominal head heights,
(e) nominal lengths and thread lengths, and
(f) thread dimensions.

This Standard omits sizes M1.6-M4, M18, M22, M27, M33, M39, M45, M52, and M60, which are included in ISO 4014 and ISO 4017. This Standard includes sizes M10 × 1.5 with 15 mm width across flats, M72 × 6, M80 × 6, M90 × 6, and M100 × 6, which are not in ISO 4014 or ISO 4017.

This Standard specifies some requirements that are not included in ISO 4014 or ISO 4017. **Dimensional requirements shown in bold type within the text and where noted within tables differ from, or are in addition to, ISO 4014 and/or ISO 4017, or, for sizes over M64, other relevant nonproduct ISO standards.** The technical differences between this Standard and the ISO standards are summarized in Appendix IV.

1.2.2 At its meeting in Varna in May of 1977, ISO/TC2 studied several technical reports analyzing design considerations influencing determination of the best series of width across flats for hexagon bolts, screws, and nuts. A primary technical objective was to achieve a logical ratio between the head or nut bearing surface area (which determines the magnitude of the compressive stress on the bolted members) and the tensile stress area of the screw thread (which governs the clamping force that can be developed by tightening the fastener).

M10 screws with 15 mm width across flats are currently being produced and used in the U.S. and many other countries of the world. This size, however, is not an ISO standard. Unless M10 screws with 15 mm width across flats are specifically ordered, M10 screws with 16 mm width across flats shall be furnished.

1.2.3 Letter symbols designating dimensional characteristics are in accord with ISO 225, ISO 4014, and ISO 4017, except where capitals have been used instead of the lower case letters used in the ISO standards.

1.3 Terminology

For definitions of terms relating to fasteners or component features thereof used in this Standard, refer to ASME B18.12.

1.4 Dimensions

1.4.1 All dimensions in this Standard are in millimeters (mm) and apply before any coating, unless stated otherwise.

Copyright ASME International
Provided by IHS under license with ASME
No reproduction or networking permitted without license from IHS
Not for Resale

1.4.2 Symbols specifying geometric characteristics are in accord with ASME Y14.5M.

1.5 References

The following is a list of publications referenced in this Standard. Unless otherwise specified, the referenced standard shall be the most recent issue at the time of order placement.

ASME B1.3M, Screw Thread Gaging Systems for Dimensional Acceptability — Inch and Metric Screw Threads (UN, UNR, UNJ, M, and MJ)
ASME B1.13M, Metric Screw Thread — M Profile
ASME B4.2, Preferred Metric Limits and Fits
ASME B18.12, Glossary of Terms for Mechanical Fasteners
ASME B18.18.1M, Inspection and Quality Assurance for General Purpose Fasteners
ASME B18.18.2M, Inspection and Quality Assurance for High-Volume Machine Assembly Fasteners
ASME B18.18.3M, Inspection and Quality Assurance for Special Purpose Fasteners
ASME B18.18.4M, Inspection and Quality Assurance for Fasteners for Highly Specialized Engineered Applications
ASME B18.18.5M, Inspection and Quality Assurance Plan Requiring In-Process Inspection and Controls
ASME B18.18.6M, Quality Assurance Plan for Fasteners Produced in a Third Party Accreditation System
ASME B18.18.7M, Quality Assurance Plan for Fasteners Produced in a Customer Approved Control Plan
ASME B18.24.1, Part Identifying Number (PIN) Code System Standard for B18 Externally Threaded Products
ASME Y14.5M, Dimensioning and Tolerancing

Publisher: The American Society of Mechanical Engineers (ASME), Three Park Avenue, New York, NY 10016-5990; Order Department: Box 2300, Fairfield, NJ 07007-2300.

ASTM B 633, Electrodeposited Coatings of Zinc on Iron and Steel
ASTM F 468M, Specification for Nonferrous Bolts, Hex Cap Screws, and Studs for General Use - Metric
ASTM F 568M, Specification for Carbon and Alloy Steel Externally Threaded Metric Fasteners
ASTM F 738M, Specification for Stainless Steel Metric Bolts, Screws, and Studs
ASTM F 788/F 788M, Surface Discontinuities of Bolts, Screws, and Studs, Inch and Metric Series
ASTM F 871M, Standard Specification for Electrodeposited Coatings on Threaded Components Metric
ASTM F 1137, Standard Specification for Phosphate/Oil and Phosphate/Organic Corrosion Protective Coatings for Fasteners
ASTM F 1470, Standard Guide for Fastener Sampling for Specified Mechanical Properties and Performance Inspection

Publisher: American Society for Testing and Materials (ASTM), 100 Barr Harbor Drive, West Conshohocken, PA 19428

ISO 225, Fasteners — Bolts, Screws and Studs — Symbols and Designations of Dimensions
ISO 4014: 1988, Hexagon Head Bolts — Product Grades A and B
ISO 4017: 1988, Hexagon Head Screws — Product Grades A and B
ISO 4753, Fasteners — Ends of Parts With External Metric ISO Thread

Publisher: International Organization for Standardization (ISO), 1 rue de Varembe, Case Postale 56, CH-1121, Geneve 20, Switzerland/Suisse

SAE J1061, Surface Discontinuities on General Application Bolts, Screws, and Studs
SAE J1199, Mechanical and Material Requirements for Metric Externally Threaded Steel Fasteners

Publisher: Society of Automotive Engineers (SAE), 400 Commonwealth Drive, Warrendale, PA 15096

2 GENERAL DATA

2.1 Heads

2.1.1 Top of Head. The top of head shall be full form and chamfered or rounded. The diameter of the chamfer circle or the start of rounding shall be equal to the maximum width across flats, S max., within a tolerance of minus 15 percent.

2.1.2 Head Height. The head height, K, is the distance, parallel to the axis of the screw, from the plane of the bearing surface to the top of the head, not including any raised markings (see para. 2.10).

2.1.3 Wrenching Height. The wrenching height, K_w, is the distance, measured at a corner of the hexagon, from the plane of the bearing surface to the last plane of full-formed hexagon, i.e., the plane closest to the top of head at which the hexagon width across corners, E, is within its specified limits.

Copyright ASME International
Provided by IHS under license with ASME
No reproduction or networking permitted without license from IHS
Not for Resale

TABLE 1 TOLERANCE ZONES

Nominal Screw Diameter and Thread Pitch	Position of Head-to-Shank Tolerance Zone Diameter at MMC [Note (1)]	Circular Runout of Bearing Surface-to-Shank FIM [Note (2)]	Position of Body-to-Thread Tolerance Zone Diameter at MMC [Note (3)]
M5 × 0.8	0.35	0.15	0.18
M6 × 1	0.44	0.15	0.18
M8 × 1.25	0.56	0.17	0.22
M10 × 1.5	0.70	0.21	0.22
M12 × 1.75	0.84	0.25	0.27
M14 × 2	0.98	0.29	0.27
M16 × 2	1.12	0.34	0.27
M20 × 2.5	1.40	0.42	0.33
M24 × 3	1.68	0.50	0.33
M30 × 3.5	2.10	0.63	0.52
M36 × 4	2.52	0.76	0.62
M42 × 4.5	2.94	0.44	0.62
M48 × 5	3.36	0.50	0.62
M56 × 5.5	3.92	0.59	0.74
M64 × 6	4.48	0.67	0.74
M72 × 6	5.04	0.75	0.74
M80 × 6	5.60	0.84	0.74
M90 × 6	6.30	0.94	0.87
M100 × 6	7.00	1.05	0.87

NOTES:
(1) See para. 2.1.5 and Appendix D, para. D8.
(2) See para. 2.1.6.
(3) See para. 2.7.6.

2.1.4 Corner Fill. The rounding due to lack of fill at the six corners of the head shall be reasonably uniform.

2.1.5 True Position of Head. At maximum material condition, the axis of the hexagon head shall be within a positional tolerance zone of the diameter specified in Table 1, with respect to the axis of the shank over a length under the head equal to the nominal screw diameter, D.

2.1.6 Bearing Surface. The bearing surface shall be flat and washer-faced. The diameter of the washer face, measured at 0.1 mm above the bearing surface, shall not exceed the actual width across flats, S, nor be less than the specified minimum washer face diameter, D_w min. (see Fig. 1). The circular runout of the bearing surface with respect to the axis of the shank shall be within the full indicator movement (FIM) as specified in Table 1. The measurement of bearing surface runout shall be made as close to the periphery of the bearing surface as possible, while the screw is held in a collet or other gripping device at a distance of one diameter under the head.

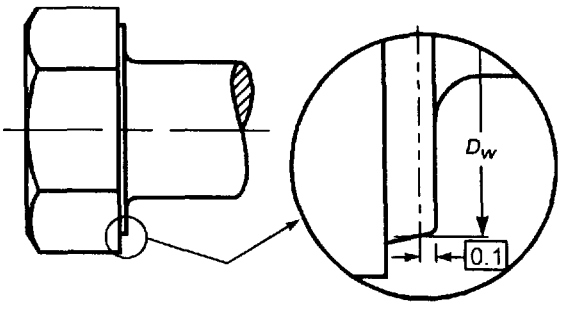

FIG. 1 WASHER FACE DETAIL

2.2 Underhead Fillet

The fillet configuration at the junction of the head and shank shall be as shown in Figs. 2 and 3, and shall have limits as specified in Table 2. The fillet shall be a smooth and continuous curve fairing smoothly

Copyright ASME International
Provided by IHS under license with ASME
No reproduction or networking permitted without license from IHS Not for Resale

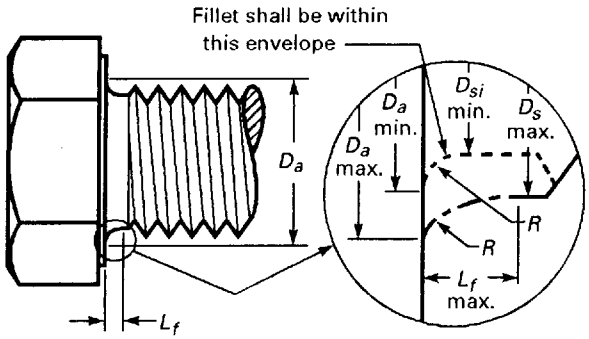

FIG. 2 FILLET DETAIL FOR SHORT SCREWS

into the bearing surface and the shank within the limits specified. No radius in the fillet contour shall be less than R min.

2.3 Body Diameter

The diameter of the body on screws that are not threaded full length shall be within the limits for D_s as specified in Table 3. For screws threaded full length, the diameter of the unthreaded shank under the head shall not exceed the specified maximum body diameter, D_s max., nor be less than the minimum body diameter, D_{si} min., specified in Table 2.

2.4 Screw Length

The length L of the screw is the distance, parallel to the axis of the screw, from the bearing surface to the extreme end of the shank. Tolerances for screw lengths are given in Table 4.

2.5 Points

The end of the screw shall be chamfered or rounded from a diameter equal to or slightly less than the thread root diameter. The length of the point to the first full formed thread at major diameter, as determined by the distance the point enters into a cylindrical NOT GO major diameter ring gage, shall not exceed U max., specified in Table 5. The end of the screw shall be reasonably square with the axis of the screw, but the slight rim or cup resulting from roll-threading shall be permissible. **At the manufacturer's option, the end of the screw may have a rounded point of radius, R_e, specified in Table 5.**

2.6 Straightness

At maximum material condition, the axes of the screw body and thread major diameter shall be within a straightness tolerance diameter equal to $0.006L$ for nominal lengths L of 300 mm or shorter, and $0.008L$ for screws having nominal lengths L of over 300 mm through 600 mm. A gage and gaging procedure for checking straightness is given in Appendix A.

2.7 Thread Length

2.7.1 The length of thread on screws shall be controlled by the maximum grip length, L_g, and the minimum body length, L_s, as set forth in paras. 2.7.2 through 2.7.5.

2.7.2 Grip gaging length L_g is the distance, measured parallel to the axis of the screw, from the underhead bearing surface to the face of a standard GO thread ring gage that is neither counterbored nor countersunk, assembled by hand as far as the thread will permit.

(a) For standard diameter-length combinations of screws, M5 to M36, the values for L_g max. are specified in Table 6. For diameter-length combinations not listed in Table 6, the maximum grip length of screws that are not threaded full length is equal to the nominal screw length, L nom., minus the basic thread length, B ref., as specified in Table 7, i.e.,

$$L_g \text{ max.} = L \text{ nom.} - B \text{ ref.}$$

(b) For short screws of nominal lengths, L, that are shorter than the lengths specified in Table 7 for screws threaded full length,

$$L_g \text{ max.} = A \text{ max.}$$

as specified in Table 7.

2.7.3 Body length L_s on screws that are not threaded full length is the distance parallel to the axis of the screw, from the bearing surface to the last scratch of thread or top of the extrusion angle, whichever is closer to the head.

(a) For standard diameter-length combinations of screws, M5 to M36, the values of L_s min. are specified in Table 6.

(b) For diameter-length combinations not listed in Table 6, the minimum body length on screws that are not threaded full length is equal to the maximum grip length, as determined above, minus the maximum transition thread length, X, specified in Table 7, i.e.,

Copyright ASME International
Provided by IHS under license with ASME
No reproduction or networking permitted without license from IHS
Not for Resale

TABLE 2 DIMENSIONS OF UNDERHEAD FILLETS

Nominal Screw Diameter and Thread Pitch	Fillet Transition Diameter, D_a [Note (1)]		Fillet Length, L_f		Fillet Radius for Short and Long Screws, R, Min. [Note (1)]	Body Diameter for Short Screws, D_{si}, Min. [Notes (1)–(3)]
	For Short Screws, Min. [Note (2)]	For Short and Long Screws, Max.	For Long Screws, Max.	For Short Screws, Max. [Notes (1), (2)]		
M5 × 0.8	5.1	5.7	1.2	0.7	0.2	4.36
M6 × 1	6.2	6.8	1.4	0.9	0.25	5.21
M8 × 1.25	8.3	9.2	2.0	1.1	0.4	7.04
M10 × 1.5	10.2	11.2	2.0	1.2	0.4	8.86
M12 × 1.75	12.2	13.7	3.0	1.3	0.6	10.68
M14 × 2	14.1	15.7	3.0	1.4	0.6	12.50
M16 × 2	16.5	17.7	3.0	1.6	0.6	14.50
M20 × 2.5	20.7	22.4	4.0	2.1	0.8	18.16
M24 × 3	24.5	26.4	4.0	2.3	0.8	21.80
M30 × 3.5	30.8	33.4	6.0	3.0	1.0	27.46
M36 × 4	36.6	39.4	6.0	3.1	1.0	33.12
M42 × 4.5	...	45.6	8.0	3.4	1.2	38.78
M48 × 5	...	52.6	10.0	4.0	1.6	44.43
M56 × 5.5	...	63.0	12.0	4.8	2.0	52.09
M64 × 6	...	71.0	13.0	5.0	2.0	59.74
M72 × 6	...	79.0	13.0 (2)	5.0	2.0	67.74
M80 × 6	...	87.0	13.0 (2)	5.0	2.0	75.74
M90 × 6	...	97.0	13.0 (2)	5.0	2.5	85.74
M100 × 6	...	107.0 (2)	13.0 (2)	5.5	2.5	95.72

NOTES:
(1) Short screws are screws that are threaded full length.
(2) See Appendix D, paras. D12 and D13.
(3) D_{si} is the minimum pitch diameter.

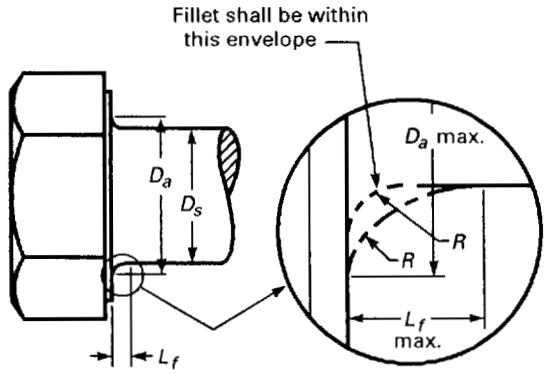

FIG. 3 FILLET DETAIL FOR LONG SCREWS

$$L_s \text{ min.} = L_g \text{ max.} - X \text{ ref.}$$

2.7.4 Basic thread length, B, specified in Table 7, is a reference dimension intended for calculation purposes only and is the distance, parallel to the axis of the screw, from the extreme end of the screw to the last complete (full form) thread.

2.7.5 Transition thread length, X ref., specified in Table 7, is a reference dimension intended for calculation purposes only. It includes the length of incomplete threads, extrusion angle where applicable, and tolerances on grip length and body length. **The transition from full thread to incomplete thread shall be smooth and uniform. The major diameter of the incomplete threads shall not exceed the actual major diameter of the complete (full form) threads. The transition threads shall have a rounded root contour.**

2.7.6 Position of Body-to-Thread. For products with cut threads at maximum material condition, the axis of the screw body, D_s, over a length equal to the nominal screw diameter from the last scratch of thread,

Copyright ASME International
Provided by IHS under license with ASME
No reproduction or networking permitted without license from IHS Not for Resale

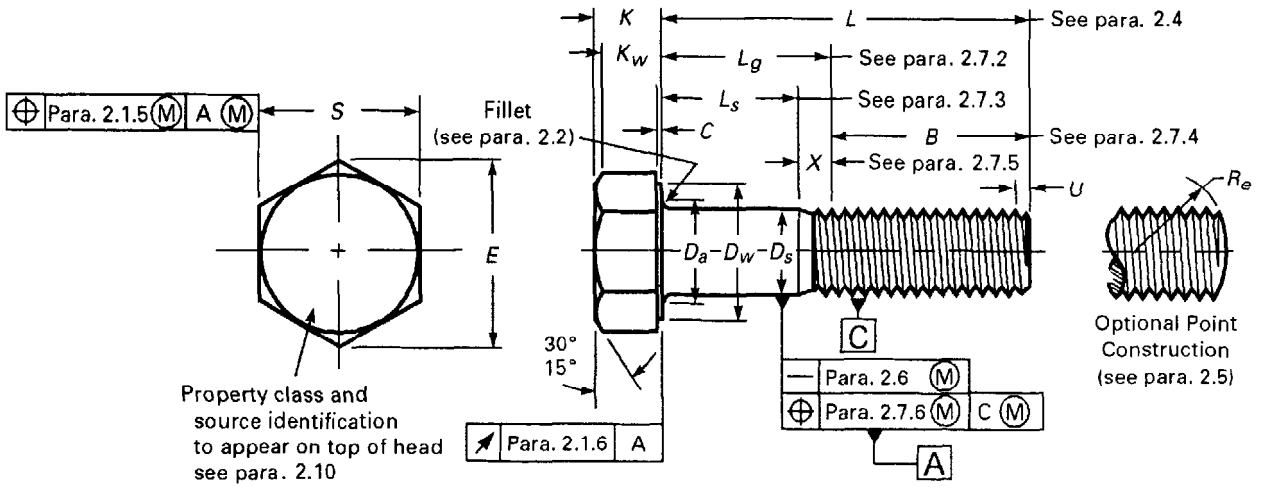

TABLE 3 DIMENSIONS OF HEX CAP SCREWS

Nominal Screw Diameter and Thread Pitch, *D*	Body Diameter, D_s [Note (1)]		Width Across Flats, *S*		Width Across Corners, *E* [Note (2)]		Head Height, *K* [Note (3)]		Wrenching Height, K_w, Min. [Note (4)]	Washer Face Thickness, *C* [Note (5)]		Washer Face Diameter, D_w, Min. [Note (6)]
	Min.	Max.	Min.	Max.	Min.	Max.	Min.	Max.		Min.	Max.	
M5 × 0.8	4.82	5.00	7.78	8.00	8.79	9.24	3.35	3.65	2.4	0.2	0.5	7.0
M6 × 1	5.82	6.00	9.78	10.00	11.05	11.55	3.85	4.15	2.8	0.2	0.5	8.9
M8 × 1.125	7.78	8.00	12.73	13.00	14.38	15.01	5.10	5.50	3.7	0.3	0.6	11.6
M10 × 1.5 (7)	9.78	10.00	14.73	15.00	16.64	17.32	6.17	6.63	4.5	0.3	0.6	13.6
M10 × 1.5 (7)	9.78	10.00	15.73	16.00	17.77	18.48	6.17	6.63	4.5	0.3	0.6	14.6
M12 × 1.75	11.73	12.00	17.73	18.00	20.03	20.78	7.24	7.76	5.2	0.3	0.6	16.6
M14 × 2	13.73	14.00	20.67	21.00	23.35	24.25	8.51	9.09	6.2	0.3	0.6	19.6
M16 × 2	15.73	16.00	23.67	24.00	26.75	27.71	9.68	10.32	7.0	0.4	0.8	22.49
M20 × 2.5	19.67	20.00	29.16 (8)	30.00	32.95 (8)	34.64	12.12	12.88	8.8	0.4	0.8	27.7
M24 × 3	23.67	24.00	35.00 (8)	36.00	39.55 (8)	41.57	14.46	15.44	10.5	0.4	0.8	33.2
M30 × 3.5	29.67 (8)	30.00	45.00	46.00	50.85	53.12	17.92	19.48	13.1	0.4	0.8	42.7
M36 × 4	35.61 (8)	36.00	53.80	55.00	60.79	63.51	21.62	23.38	15.8	0.4	0.8	51.1
M42 × 4.5	41.38	42.00	62.90 (8)	65.00	71.71 (8)	75.06	25.03	26.97	18.2	0.5	1.0	59.8
M48 × 5	47.38	48.00	72.60 (8)	75.00	82.76 (8)	86.60	28.93	31.07	21.0	0.5	1.0	69.0
M56 × 5.5	55.26	56.00	82.20 (8)	85.00	93.71 (8)	98.15	33.80	36.20	24.5	0.5	1.0	78.1

(continued)

Copyright ASME International
Provided by IHS under license with ASME
No reproduction or networking permitted without license from IHS
Not for Resale

TABLE 3 DIMENSIONS OF HEX CAP SCREWS (CONT'D)

Nominal Screw Diameter and Thread Pitch, *D*	Body Diameter, D_s [Note (1)]		Width Across Flats, *S*		Width Across Corners, *E* [Note (2)]		Head Height, *K* [Note (3)]		Wrenching Height, K_w, Min. [Note (4)]	Washer Face Thickness, *C* [Note (5)]		Washer Face Diameter, D_w, Min. [Note (6)]
	Min.	Max.	Min.	Max.	Min.	Max.	Min.	Max.		Min.	Max.	
M64 × 6	63.26	64.00	91.80 (8)	95.00	104.65 (8)	109.70	38.68	41.32	28.0	0.5	1.0	87.2
M72 × 6	71.26	72.00	101.40 (8)	105.00	115.60 (8)	121.24	43.55	46.45	31.5	0.6	1.2 (8)	96.3
M80 × 6	79.26	80.00	111.00 (8)	115.00	126.54 (8)	132.72	48.42	51.58	35.0	0.6	1.2 (8)	105.4
M90 × 6	89.13	90.00	125.50 (8)	130.00	143.07 (8)	150.11	54.26	57.75	39.2	0.6	1.2 (8)	119.2
M100 × 6	99.13	100.00	140.00 (8)	145.00	159.60 (8)	167.43	60.10	63.90	43.4	0.6	1.2 (8)	133.0

GENERAL NOTES:
(a) All sizes except the following are included in ISO 4014 and ISO 4017: M10 × 1.5 with 15 mm WAF, and M72 thru M100.
(b) M10 screws with 15 mm WAF are commonly produced in the USA and other countries. The WAF for all M10's should be specified.

NOTES:
(1) For D_s, see para. 2.3.
(2) For *E*, see paras. 2.1.3 and 2.1.4.
(3) For *K*, see para. 2.1.2. For *K*, except M5 × 0.8 and M6 × 1, see para. 1.2.1.
(4) For K_w, see paras. 1.2.1 and 2.1.3.
(5) For *C*, see para. 2.1.6. For *C*, Min., see para. 1.2.1.
(6) For D_w, see para. 2.1.6. For D_w, except M16 × 2, see para. 1.2.1.
(7) Unless M10 screws with 15 mm width across flats are specifically ordered, M10 screws with 16 mm width across flats shall be furnished (see para. 1.2.2).
(8) See Appendix D, paras. D4, D6, D7, D9, D10, and D13.

Copyright ASME International
Provided by IHS under license with ASME
No reproduction or networking permitted without license from IHS
Not for Resale

TABLE 4 LENGTH TOLERANCES

Nominal Length		Nominal Screw Diameter							
Over	Thru	M5	M6	M8	M10	M12	M14	M16-M24	>M24
6	10	±0.29	±0.29	±0.29	±0.29	...	...	...	...
10	18	±0.35	±0.35	±0.35	±0.35	±0.35	±0.35	±0.35	...
18	30	±0.42	±0.42	±0.42	±0.42	±0.42	±0.42	±0.42	±1.05
30	50	±0.50	±0.50	±0.50	±0.50	±0.50	±0.50	±0.50	±1.25
50	60	±1.50	±0.60	±0.60	±0.60	±0.60	±0.60	±0.60	±1.50
60	80	±1.50	±1.50	±0.60	±0.60	±0.60	±0.60	±0.60	±1.50
80	100	±1.75	±1.75	±1.75	±0.70	±0.70	±0.70	±0.70	±1.75
100	120	±1.75	±1.75	±1.75	±1.75	±0.70	±0.70	±0.70	±1.75
120	140	±2.00	±2.00	±2.00	±2.00	±2.00	±0.80	±0.80	±2.00
140	150	±2.00	±2.00	±2.00	±2.00	±2.00	±2.00	±0.80	±2.00
150	180	±2.00	±2.00	±2.00	±2.00	±2.00	±2.00	±2.00	±2.00
180	250	±2.30	±2.30	±2.30	±2.30	±2.30	±2.30	±2.30	±2.30
250	315	±2.60	±2.60	±2.60	±2.60	±2.60	±2.60	±2.60	±2.60
315	400	±2.85	±2.85	±2.85	±2.85	±2.85	±2.85	±2.85	±2.85
400	500	±3.15	±3.15	±3.15	±3.15	±3.15	±3.15	±3.15	±3.15

GENERAL NOTE: All tolerances are plus and minus.

TABLE 5 DIMENSIONS OF POINTS

Nominal Screw Diameter and Thread Pitch	Point Radius, R_e, Approx. [Note (1)]	Point Length, U, Max. [Note (2)]
M5 × 0.8	7.0	1.60
M6 × 1	8.4	2.00
M8 × 1.25	11.2	2.50
M10 × 1.5	14.0	3.00
M12 × 1.75	16.8	3.50
M14 × 2	19.6	4.00
M16 × 2	22.4	4.00
M20 × 2.5	28.0	5.00
M24 × 3	33.6	6.00
M30 × 3.5	42.0	7.00
M36 × 4	50.4	8.00
M42 × 4.5	58.8	9.00
M48 × 5	67.2	10.00
M56 × 5.5	78.4	11.00
M64 × 6	89.6	12.00
M72 × 6	100.8	12.00
M80 × 6	112.0	12.00
M90 × 6	126.0	12.00
M100 × 6	140.0	12.00

NOTES:
(1) R_e, approx., equals 1.4 times the nominal screw diameter, and agrees with ISO 4753.
(2) U, max., equals 2 times the thread pitch.

shall be within the positional tolerance zone diameter specified in Table 1, with respect to the axis of the thread, over a length equal to the nominal screw diameter from the last complete thread. A gage and gaging procedure for checking body position is given in Appendix B.

2.8 Screw Threads

2.8.1 Thread Series and Tolerance Class. Screw threads shall be general purpose metric screw threads with tolerance Class 6g conforming to ASME B1.13M, unless otherwise specified by the purchaser. For screws with additive finish, size limits for tolerance Class 6g apply prior to coating, and the thread after coating is subject to acceptance using a basic (tolerance position h) size GO thread gage and tolerance Class 6g thread gage for either minimum material, LO or NOT GO.

2.8.2 Thread Gaging. Unless otherwise specified, dimensional acceptability of screw threads shall be based on System 21 of ASME B1.3M.

2.9 Materials and Mechanical Properties

2.9.1 Steel. Unless otherwise specified, steel screws shall conform to the requirements of ASTM F 568M or SAE J1199.

Copyright ASME International
Provided by IHS under license with ASME
No reproduction or networking permitted without license from IHS
Not for Resale

2.9.2 Corrosion-Resistant Steels. Unless otherwise specified, screws made of corrosion-resistant steels shall conform to the requirements of ASTM F 738M.

2.9.3 Nonferrous Metals. Unless otherwise specified, nonferrous screws shall conform to the requirements of ASTM F 468M.

2.10 Identification Symbols

Identification marking symbols shall be on the top of screw heads and shall be raised or indented at the manufacturer's option unless otherwise specified at the time of ordering. Markings shall be legible to the unaided eye with the exception of corrective lenses.

(a) **When raised, markings shall project not less than 0.1 mm for M14 and smaller screws, and 0.3 mm for M16 and larger screws, above the surface of the head. The total head height (head plus markings) shall not exceed the specified maximum head height plus 0.1 mm for M5 and M6 screws, 0.2 mm for M8 and M10 screws, 0.3 mm for M12 and M14 screws, and 0.4 mm for M16 and larger screws.**

(b) When indented, the depth of the marking shall not reduce the load carrying capability of the screw.

2.10.1 Property Class Symbols. Each screw shall be marked in accordance with the requirements of the applicable specification for its chemical and mechanical requirements.

2.10.2 Source Symbols. Each screw shall be marked to identify its source (manufacturer or private label distributor).

2.11 Finish

Unless otherwise specified, screws shall be supplied with a natural (as processed) finish, unplated or uncoated, in a clean condition and lightly oiled.

2.12 Workmanship

Screws shall be free from surface imperfections such as burrs, seams, laps, loose scale, or other irregularities that could affect serviceability. When control of surface discontinuities is required, the purchaser shall specify conformance to ASTM F 788/F 788M or SAE J1061.

2.13 Inspection and Quality Assurance

Unless otherwise specified, acceptability of screws shall be determined in accordance with ASME B18.18.1M.

2.14 Dimensional Conformance

2.14.1 Products shall conform to the specified dimensions. Unless otherwise specified, the following provisions shall apply for inspection of dimensional characteristics. The designated characteristics are defined within the following table and shall be inspected in accordance with ASME B18.18.2M to the inspection level shown.

Characteristic	Inspection Level
Thread acceptability	C
Head width across corners, E	C
Grip length, L_g max.	C
Screw length, L_a	C
Visual inspection	C

NOTE: Visual inspection shall include property class marking, source marking, fillet, and workmanship.

If verifiable in-process inspection is used, inspection sample sizes and reporting shall be in accordance with the applicable ASME, ASTM, or SAE quality system consensus standard.

2.14.2 For nondesignated dimensional characteristics, the provisions of ASME B18.18.1M shall apply. Should a nondesignated dimension be determined to be outside its specified limits, it shall be deemed conforming to this standard if the user, who is the installer, accepts the dimension, based on fit, form, and function considerations.

2.15 Clearance Holes

The recommended sizes of clearance holes in material to be assembled using hex cap screws are the normal series given in Appendix C.

2.16 Designation

2.16.1 Hex cap screws shall be designated by the following data, preferably in the sequence shown: product name, nominal diameter and thread pitch, nominal length, steel property class or material identification, and protective coating, if required. For example:

Copyright ASME International
Provided by IHS under license with ASME
No reproduction or networking permitted without license from IHS
Not for Resale

TABLE 6 MAXIMUM GRIP GAGING LENGTHS L_g and MINIMUM BODY LENGTHS L_s

Nominal Length, L	Nominal Diameter and Thread Pitch											
	M5 × 0.8		M6 × 1		M8 × 1.25		M10 × 1.5		M12 × 1.75		M14 × 2	
	L_g Max.	L_s Min.	L_g Max.	L_s Min.	L_g Max.	L_s Min.	L_g Max.	L_s Min.	L_g Max.	L_s Min.	L_g Max.	L_s Min.
8	1.2 (1)	...	...	...	...	...	...	...	...	...	...	...
10	2.4	...	1.5 (1)	...	...	...	...	...	...	...	...	...
12	2.4	...	3.0	...	1.9 (1)	...	...	...	...	...	...	...
16	2.4	...	3.0	...	4.0	...	2.2 (1)	...	2.6 (1)	...	3.0 (1)	...
20	2.4	...	3.0	...	4.0	...	4.5	...	2.6 (1)	...	3.0 (1)	...
25	9.0	5.0	3.0	...	4.0	...	4.5	...	5.3	...	3.0 (1)	...
30	14.0	10.0	12.0	7.0	4.0	...	4.5	...	5.3	...	6.0	...
35	19.0	15.0	17.0	12.0	4.0	...	4.5	...	5.3	...	6.0	...
40	24.0	20.0	22.0	17.0	18.0	11.75	4.5	...	5.3	...	6.0	...
45	29.0	25.0	27.0	22.0	23.0	16.75	19.0	11.5	5.3	...	6.0	...
50	34.0	30.0	32.0	27.0	28.0	21.75	24.0	16.5	20.0	11.25	6.0	...
55	...	...	37.0	32.0	33.0	26.75	29.0	21.5	25.0	16.25	6.0	...
60	...	...	42.0	37.0	38.0	31.75	34.0	26.5	30.0	21.25	26.0	16.0
65	...	...	...	...	43.0	36.75	39.0	31.5	35.0	26.25	31.0	21.0
70	...	...	...	...	48.0	41.75	44.0	36.5	40.0	31.25	36.0	26.0
80	...	...	...	...	58.0	51.75	54.0	46.5	50.0	41.25	46.0	36.0
90	...	...	...	...	...	...	64.0	56.5	60.0	51.25	56.0	46.0
100	...	...	...	...	...	...	74.0	66.5	70.0	61.25	66.0	56.0
110	...	...	...	...	...	...	...	...	80.0	71.25	76.0	66.0
120	...	...	...	...	...	...	...	...	90.0	81.25	86.0	76.0
130	...	...	...	...	...	...	...	...	...	...	90.0	80.0
140	...	...	...	...	...	...	...	...	...	...	100.0	90.0
150	...	...	...	...	...	...	...	...	...	...	...	...
160	...	...	...	...	...	...	...	...	...	...	...	...
180	...	...	...	...	...	...	...	...	...	...	...	...
200	...	...	...	...	...	...	...	...	...	...	...	...
220	...	...	...	...	...	...	...	...	...	...	...	...
240	...	...	...	...	...	...	...	...	...	...	...	...
260	...	...	...	...	...	...	...	...	...	...	...	...
280	...	...	...	...	...	...	...	...	...	...	...	...
300	...	...	...	...	...	...	...	...	...	...	...	...

GENERAL NOTES:
(a) Diameter-length combinations between the thin stepped lines are recommended.
(b) Screws with lengths above the thick stepped line are threaded full length; see Table 7.
(c) For screws of larger sizes and/or with lengths longer than those below the lowest stepped line, L_2 and L_s values shall be computed from the formulas given in para. 2.7 of General Data.

NOTE:
(1) See Appendix D, para. D16.

EXAMPLE:
Hex cap screw, M10 × 1.5 × 50, Class 9.8, zinc plated per ASTM F 871M and ASTM B 633 Fe/Zn 5 Type II.

EXAMPLE:
Hex cap screw, M16 × 2 × 70, Class 10.9, Phosphate/Oil, ASTM F 1137 Grade I.

EXAMPLE:
Hex cap screw, M6 × 1 × 35, silicon bronze, ASTM F 468M Alloy 651.

EXAMPLE:
Hex cap screw, M8 × 1.25 × 45, Al-70 ASTM F 738M.

NOTE: It is common practice in ISO standards to omit thread pitch from the product size designation up to M64 when screw threads are the metric coarse thread series (e.g., M10 is M10 × 1.5).

2.16.2 For a recommended part identification numbering (PIN) system, see ASME B18.24.1.

Copyright ASME International
Provided by IHS under license with ASME
No reproduction or networking permitted without license from IHS
Not for Resale

TABLE 6 MAXIMUM GRIP GAGING LENGTHS L_g and MINIMUM BODY LENGTHS L_s (CONT'D)

Nominal Length, L	Nominal Diameter and Thread Pitch									
	M16 × 2		M20 × 2.5		M24 × 3		M30 × 3.5		M36 × 4	
	L_g Max.	L_s Min.	L_g Max.	L_s Min.	L_g Max.	L_s Min.	L_g Max.	L_s Min.	L_g Max.	L_s Min.
8	...	...	...	...	...	...	...	...	...	...
10	...	...	...	...	...	...	...	...	...	...
12	...	...	...	...	...	...	...	...	...	...
16	...	...	...	...	...	...	...	...	...	...
20	...	...	...	...	...	...	...	...	...	...
25	3.0 (1)	...	...	...	...	...	...	...	...	...
30	3.0 (1)	...	3.8 (1)	...	...	...	...	...	...	...
35	6.0	...	3.8 (1)	...	9.0	...	...	...	...	...
40	6.0	...	7.5	...	9.0	...	10.5	...	...	...
45	6.0	...	7.5	...	9.0	...	10.5	...	...	...
50	6.0	...	7.5	...	9.0	...	10.5	...	12.0	...
55	6.0	...	7.5	...	9.0	...	10.5	...	12.0	...
60	6.0	...	7.5	...	9.0	...	10.5	...	12.0	...
65	27.0	17.0	7.5	...	9.0	...	10.5	...	12.0	...
70	32.0	22.0	7.5	...	9.0	...	10.5	...	12.0	...
80	42.0	32.0	34.0	21.5	9.0	...	10.5	...	12.0	...
90	52.0	42.0	44.0	31.5	36.0	21.0	10.5	...	12.0	...
100	62.0	52.0	54.0	41.5	46.0	31.0	10.5	...	12.0	...
110	72.0	62.0	64.0	51.5	56.0	41.0	44.0	26.5	12.0	...
120	82.0	72.0	74.0	61.5	66.0	51.0	54.0	36.5	12.0	...
130	86.0	76.0	78.0	65.5	70.0	55.0	58.0	40.5	12.0	...
140	96.0	86.0	88.0	75.5	80.0	65.0	68.0	50.5	56.0	36.0
150	106.0	96.0	98.0	85.5	90.0	75.0	78.0	60.5	66.0	46.0
160	116.0	106.0	108.0	95.5	90.0	85.0	88.0	70.5	76.0	56.0
180	...	...	128.0	115.5	120.0	105.0	108.0	90.5	96.0	76.0
200	...	...	148.0	135.5	140.0	125.0	128.0	110.5	116.0	96.0
220	...	...	...	...	147.0	132.0	135.0	117.5	123.0	103.0
240	...	...	...	...	137.0	152.0	155.0	137.5	143.0	123.0
260	...	...	...	...	...	...	175.0	157.5	163.0	143.0
280	...	...	...	...	...	...	195.0	177.5	183.0	163.0
300	...	...	...	...	...	...	215.0	197.5	203.0	183.0

Copyright ASME International
Provided by IHS under license with ASME
No reproduction or networking permitted without license from IHS Not for Resale

TABLE 7 THREAD LENGTHS

Nominal Screw Diameter and Thread Pitch	Thread Length, *B*, Ref			Transition Thread Length, *X*, Ref	Screws Threaded Full Length				
	Screw Lengths, *L*, ≤ 125	Screw Lengths, *L*, ≤ 125 & ≤ 200	Screw Lengths, *L*, > 200		Screw Lengths, *L*, Under	Unthreaded Length Under Head, *A*, Max. [Note (1)]	Screw Lengths, *L* At Least	Screw Lengths, *L* Under	Unthreaded Length Under Head, *A*, Max.
M5 × 0.8	16	22	35	4.0	10	1.2	10	25	2.4
M6 × 1	18	24	37	5.0	12	1.5	12	30	3.0
M8 × 1.25	22	28	41	6.25	16	1.9	16	40	4.0
M10 × 1.5	26	32	45	7.5	20	2.2	20	45	4.5
M12 × 1.75	30	36	49	8.75	24	2.6	24	50	5.3
M14 × 2	34	40	53	10.0	28	3.0	28	60	6.0
M16 × 2	38	44	57	10.0	32	3.0	32	65	6.0
M20 × 2.5	46	52	65	12.5	40	3.8	40	80	7.5
M24 × 3	54	60	73	15.0	...	...	...	90	9.0
M30 × 3.5	66	72	85	17.5	...	...	...	110	10.5
M36 × 4	...	84	97	20.0	...	...	...	140	12.0
M42 × 4.5	...	96	109	22.5	...	...	...	160	13.5
M48 × 5	...	108	121	25.0	...	...	...	180	15.0
M56 × 5.5	...	...	137	27.5	...	...	...	220	16.5
M64 × 6	...	...	153	30.0	...	...	...	260	18.0
M72 × 6	...	...	169	30.0	...	...	...	280	18.0
M80 × 6	...	...	185	30.0	...	...	...	300	18.0
M90 × 6	...	...	205	30.0	...	...	...	340	18.0
M100 × 6	...	...	225	30.0	...	...	...	360	18.0

NOTE:
(1) See Appendix D, para. D16.

Copyright ASME International
Provided by IHS under license with ASME
No reproduction or networking permitted without license from IHS
Not for Resale

NONMANDATORY APPENDIX A
SCREW STRAIGHTNESS GAGE AND GAGING PROCEDURE

The conformance of screws to shank straightness or camber limitations, set forth in para. 2.6, shall be checked by using the gage, illustrated in Fig. A1, in accordance with the following procedure:

Allowable total camber on the product to be inspected shall be calculated in accordance with para. 2.6. The total camber thus derived shall be added to the specified maximum body diameter and the movable rail of gage shall be adjusted to provide a parallel space between the rails equal to this distance by obtaining common readings on both micrometer heads. The movable rail shall then be locked in place by tightening securing screws.

The product shall then be inserted between rails, and shall be rotated by hand through full 360 deg. Any interference occurring between the product and the gage that is sufficient to prevent rotation shall indicate excessive camber.

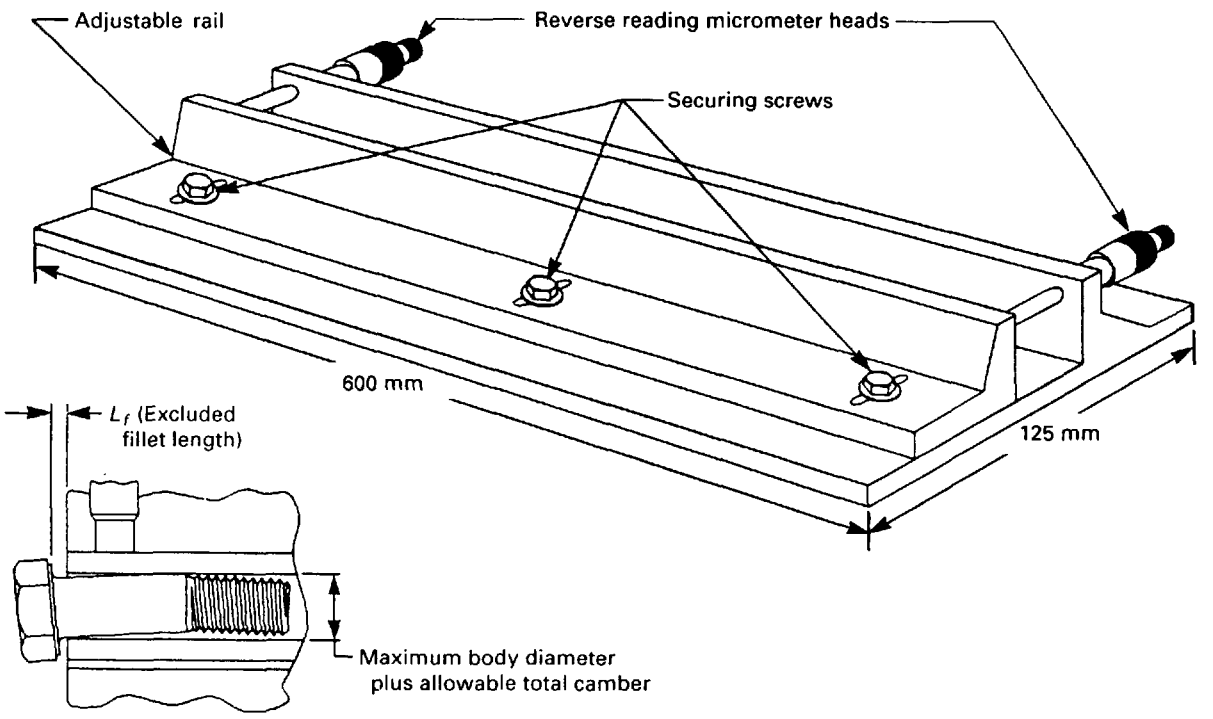

FIG. A1 TYPICAL STRAIGHTNESS GAGE

Copyright ASME International
Provided by IHS under license with ASME
No reproduction or networking permitted without license from IHS
Not for Resale

NONMANDATORY APPENDIX B
BODY POSITION GAGES AND GAGING PROCEDURES

Gages that may be used for checking position of the screw body with respect to the thread are illustrated below in Fig. B1.

In the lower construction, GO thread ring gage *A* is centered on sleeve *B* by means of the positioning plug *E*, and is secured in position by attachment screws *C*. The ring gage is set to the maximum pitch diameter of the screw thread, Class 6h.

For position of body-to-thread per para. 2.7.6, gage length, L_h, is equal to the nominal screw diameter, *D*, plus the transition thread length, *X*, i.e.

$$L_h = D + X$$

Diameter D_h, of the counterbore or hole in sleeve(s), equals the nomial screw diameter, *D*, plus the positional tolerance, T_2 (see Table 1), i.e.

$$D_h = D + T_2$$

The screw is screwed by hand into the GO thread gage for the full length of the thread.

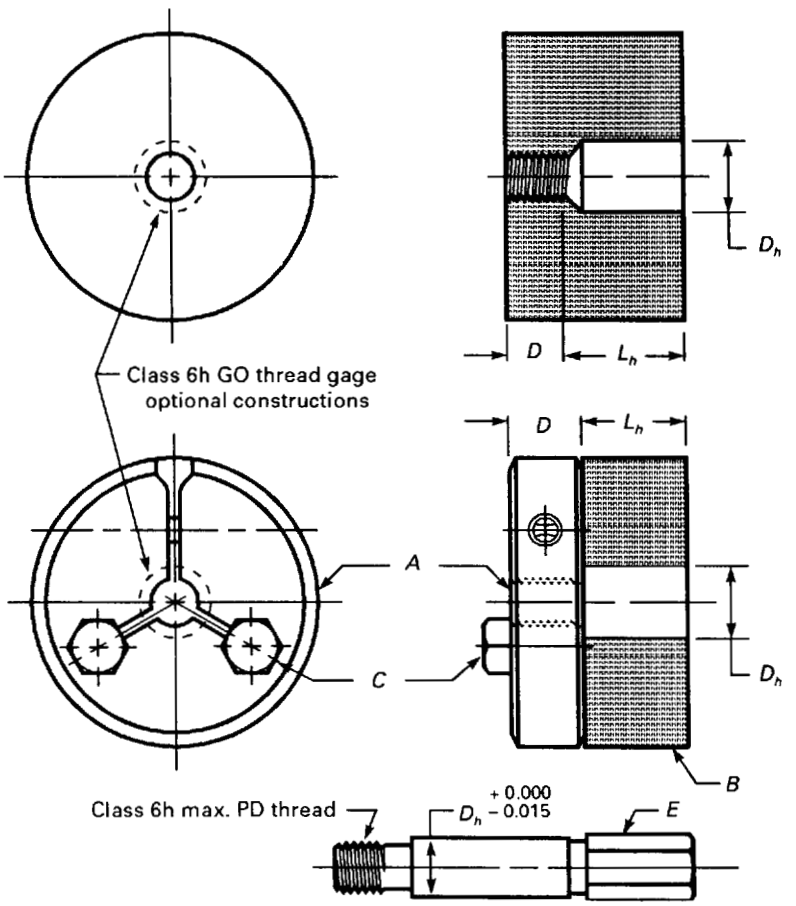

FIG. B1 TYPICAL GAGE

Previous page is blank

Copyright ASME International
Provided by IHS under license with ASME
No reproduction or networking permitted without license from IHS
Not for Resale

NONMANDATORY APPENDIX C
RECOMMENDED CLEARANCE HOLES FOR SCREWS

The recommended sizes of clearance holes in material to be assembled using hex cap screws are the normal series, given below in Table C1.

TABLE C1 CLEARANCE HOLES FOR SCREWS

Nominal Screw Diameter and Thread Pitch	Clearance Hole Diameter, D_h [Note (1)]		
	Normal Clearance Preferred [Note (2)]	Close Clearance [Note (3)]	Loose Clearance [Note (4)]
M5 × 0.8	5.5	5.3	5.8
M6 × 1	6.6	6.4	7.0
M8 × 1.25	9.0	8.4	10.0
M10 × 1.5	11.0	10.5	12.0
M12 × 1.75	13.5	13.0	14.5
M14 × 2	15.5	15.0	16.5
M16 × 2	17.5	17.0	18.5
M20 × 2.5	22.0	21.0	24.0
M24 × 3	26.0	25.0	28.0
M30 × 3.5	33.0	31.0	35.0
M36 × 4	39.0	37.0	42.0
M42 × 4.5	45.0	43.0	48.0
M48 × 5	52.0	50.0	56.0
M56 × 5.5	62.0	58.0	66.0
M64 × 6	70.0	66.0	74.0
M72 × 6	78.0	74.0	82.0
M80 × 6	86.0	82.0	91.0
M90 × 6	96.0	93.0	101.0
M100 × 6	107.0	104.0	112.0

NOTES:
(1) The clearance hole diameters given in the table are minimum sizes. Recommended tolerances from ANSI B4.2 are H12 for close clearance holes, H13 for normal clearance holes, and H14 for loose clearance holes.
(2) Normal clearance hole sizes are preferred for general purpose applications, and should be specified unless special design considerations dictate the need for either a close or loose clearance hole.
(3) Close clearance hole sizes should be specified only where conditions, such as critical alignment of assembled parts, wall thickness, or other limitations, necessitate use of a minimal hole. When close clearance holes are specified, special provision (e.g., countersinking) may be needed at the screw entry side to permit proper seating of the screw head.
(4) Loose clearance hole sizes should be specified only for applications where maximum adjustment capability between components being assembled is necessary.

Previous page is blank

Copyright ASME International
Provided by IHS under license with ASME
No reproduction or networking permitted without license from IHS
Not for Resale

NONMANDATORY APPENDIX D
COMPARISON WITH ISO STANDARDS

D1 SCOPE

This Appendix summarizes the technical differences between ASME B18.2.3.1M-1998 and ISO 4014: 1988, ISO 4017: 1988, and related ISO standards.

D2 PRODUCT NAMES "BOLT" AND "SCREW"

Of the products named "hex cap screw" per B18.2.3.1M, those that are threaded full length are named "hexagon screw" per ISO 1891 or "hexagon head screw" per ISO 4017, but those that are not threaded full length are named "hexagon bolt" per ISO 1891 or "hexagon head bolt" per ISO 4014.

D3 SIZES

B18.2.3.1M omits ISO 4014 and ISO 4017 sizes M1.6-M4, M18, M22, M27, M33, M39, M45, M52, and M60. B18.2.3.1M size M10 with 15 mm width across flats, and sizes M72 × 6, M80 × 6, M90 × 6, and M100 × 6 are not included in ISO 4014 and ISO 4017, nor in ISO 8676 and ISO 8765.

D4 WIDTH ACROSS FLATS, *S*, AND WIDTH ACROSS CORNERS, *E*

Except for M10 with 15 mm width across flats, the maximum widths across flats, *S* max., specified in B18.2.3.1M Table 3, agree with ISO 4014 and ISO 4017 for M5-M64, and with ISO 272 for M5-M100.

For M5-M14 of nominal lengths over 10D, and M16 of nominal lengths over 150 mm, the minimum widths across flats and corners, *S* min. and *E* min., specified in B18.2.3.1M Table 3, are greater than those per ISO 4014 or ISO 4017.

For M20 and M24 of nominal lengths 150 mm or less, and for M42-M64, the minimum widths across flats and corners, *S* min. and *E* min., specified in B18.2.3.1M Table 3, are smaller than those per ISO 4014 or ISO 4017. For M72-M100, the minimum widths across flats and corners, *S* min. and *E* min., specified in B18.2.3.1M Table 3, are smaller than those per ISO 4759/1 for Product Grade B.

The maximum width across corners, *E* max., specified in B18.2.3.1M Table 3, is not specified in ISO 4014 or ISO 4017. Instead, the draft revision of ISO 4759-1 would control the shape of the hexagon by zero positional tolerance at maximum material condition, which is not specified in B18.2.3.1M.

D5 TOP OF HEAD

The diameter limits for the chamfer circle or start of rounding on top of the head specified in B18.2.3.1M para. 2.1.1 are not specified in ISO 4014, ISO 4017, or ISO 4759/1.

D6 HEAD HEIGHT, *K*

For M8-M64, the maximum head heights, *K* max., specified in B18.2.3.1M Table 3, are greater, and the minimum head heights, *K* min., specified in B18.2.3.1M Table 3, are less than those per ISO 4014 or ISO 4017. For M72-M100, the limits for head heights, *K*, specified in B18.2.3.1M Table 3, include greater tolerances than those per ISO 4759/1 for Product Grade B.

D7 WRENCHING HEIGHT, K_w

For M5-M64, the minimum wrenching heights, K_w min., specified in B18.2.3.1M Table 3, are greater than those per ISO 4014 and ISO 4017. For M72 and M80, the minimum wrenching heights, K_w min., specified in B18.2.3.1M Table 3, are greater. For M80 and M100, the minimum wrenching heights, K_w min., specified in B18.2.3.1M Table 3, are less than those per ISO 4759/1.

D8 TRUE POSITION OF HEAD

The position of head-to-shank tolerance zone diameters at maximum material condition specified in B18.2.3.1M Table 1 are:

(a) for M5 of all lengths, and M6-M14 of lengths over 10D, less than those per ISO 4014 and ISO 4017;

Previous page is blank

Copyright ASME International
Provided by IHS under license with ASME
No reproduction or networking permitted without license from IHS
Not for Resale

(b) for M8-M14 of lengths under 10D, and M16-M64 of all lengths, greater than those per ISO 4014 and ISO 4017; and

(c) for M72-M100, greater than those per ISO 4759/I for Product Grade B.

Position at maximum material condition, specified in B18.2.3.1M, agrees with a draft revision of ISO 4759-1, but differs from ISO 4759/1-1978, which specifies concentricity regardless of feature size.

D9 WASHER FACE THICKNESS, *C*

The minimum washer face thicknesses, *C* min., specified in B18.2.3.1M Table 3, are thicker than those per ISO 4014 and ISO 4017 for M5-M64, and thicker than those per ISO 4759-1 for M72-M100.

The maximum washer face thicknesses, *C* max., specified in B18.2.3.1M Table 3, are thicker than those per ISO 4759/I for M80-M100.

D10 WASHER FACE DIAMETER, D_w

For M5-M14 and M20-M64, the minimum washer face diameters, D_w min., specified in B18.2.3.1M Table 3, are different, larger or smaller, than those specified in ISO 4014 and ISO 4017. For M72-M100, the minimum washer face diameters, D_w min., specified in B18.2.3.1M Table 3, are smaller than those per ISO 4759/I.

D11 RUNOUT OR PERPENDICULARITY OF BEARING SURFACE-TO-SHANK

B18.2.3.1M para. 2.1.6 specifies circular runout, measured as close to the periphery of the bearing surface as possible, while ISO 4759/I specifies perpendicularity, i.e., total runout, of the bearing surface from the fillet transition diameter to a diameter equal to 0.8*S*, or, in the draft revision, 1.2*D*.

D12 FILLET

For screws threaded full length, the minimum fillet transition diameters, D_a min., and shorter maximum fillet lengths, L_f max., specified in B18.2.3.1M Fig. 2 and Table 2, are not specified in ISO 4017.

For size M100 × 6, the maximum fillet transition diameter, D_a max., specified in B18.2.3.1M Table 2, is 107 mm, vs 108 mm per ISO 885.

For sizes over M64, the maximum fillet lengths, L_f max., specified in B18.2.3.1M Table 2, are not given in ISO standards.

D13 BODY DIAMETER, D_s AND D_{si}

For M5-M14 of nominal lengths over 10D, M16-M24 of nominal lengths over 150 mm, M30 and M36, the minimum body diameters, D_s min., specified in B18.2.3.1M Table 3, are greater than those per ISO 4014.

For screws threaded full length, B18.2.3.1M Table 2 specifies minimum diameters of unthreaded shank, D_{si} min., which are equal to the minimum pitch diameter, while ISO 4017 specifies "$d_s \approx$ pitch diameter."

D14 POINTS

The optional rounded point per B18.2.3.1M para. 2.5 is not in ISO 4014 or ISO 4017, but Table 5 agrees with ISO 4753.

D15 STRAIGHTNESS

The straightness tolerances specified in B18.2.3.1M para. 2.6 are:

(a) for lengths up to 12 mm, less than those per ISO 4014 and ISO 4017, and

(b) for lengths 16 mm and longer, greater than those per ISO 4014 and ISO 4017.

D16 GRIP GAGING LENGTH, L_g, AND UNTHREADED LENGTH UNDER HEAD, *A*, OF SCREWS THREADED FULL LENGTH

For M5-M20 screws shorter than 2D, the maximum grip gaging lengths, L_g max., specified in B18.2.3.1M Table 6, and the maximum unthreaded lengths under head, *A* max., specified in B18.2.3.1M Table 4, are shorter than those per ISO 4017.

The minimum unthreaded lengths under the head, *A* min., of screws threaded full length specified in ISO 4017 are not specified in B18.2.3.1M.

D17 ROOT CONTOUR OF TRANSITION THREADS

The rounded root contour of the transition threads, specified in B18.2.3.1M para. 2.7.5, is not specified in ISO 4014, ISO 4017, or ISO 965-1.

D18 POSITION OF BODY-TO-THREAD

For M5-M14 of lengths over 10D, and M16-M24 of lengths over 150 mm, the tolerance zone diameters

Copyright ASME International
Provided by IHS under license with ASME
No reproduction or networking permitted without license from IHS
Not for Resale

for position of the body with respect to the thread, specified in B18.2.3.1M para. 2.7.6 and Table 1, are less than those per ISO 4014 and ISO 4017. Position at maximum material condition, specified in B18.2.3.1M, agrees with a draft revision of ISO 4759-1, but differs from ISO 4759/I-1978, which specifies concentricity regardless of feature size.

D19 MARKING

B18.2.3.1M para. 2.10 requires marking on the top of the head, while ISO 898-1 requires marking on either the top or the side of the head.

The maximum heights of markings above the maximum head heights specified in B18.2.3.1M para. 2.10 are not specified in ISO 4014 and ISO 4017, nor in ISO 898-1.

D20 INSPECTION, QUALITY ASSURANCE, DIMENSIONAL CONFORMANCE, AND ACCEPTABILITY

The inspection, quality assurance, and dimensional conformance provisions in B18.2.3.1M para. 2.13 and 2.14 differ from the acceptability provision in ISO 4014 or ISO 4017.

Copyright ASME International
Provided by IHS under license with ASME
No reproduction or networking permitted without license from IHS

Not for Resale

ASME Services

ASME is committed to developing and delivering technical information. At ASME's Information Central, we make every effort to answer your questions and expedite your orders. Our representatives are ready to assist you in the following areas:

ASME Press
Codes & Standards
Credit Card Orders
IMechE Publications
Meetings & Conferences
Member Dues Status
Member Services & Benefits
Other ASME Programs
Payment Inquiries
Professional Development
Short Courses
Publications
Public Information
Self-Study Courses
Shipping Information
Subscriptions/Journals/Magazines
Symposia Volumes
Technical Papers

How can you reach us? It's easier than ever!

There are four options for making inquiries* or placing orders. Simply mail, phone, fax, or E-mail us and an Information Central representative will handle your request.

Mail
ASME
22 Law Drive, Box 2900
Fairfield, New Jersey
07007-2900

Call Toll Free
US & Canada: 800-THE-ASME
(800-843-2763)
Mexico: 95-800-THE-ASME
(95-800-843-2763)
Universal: 973-882-1167

Fax-24 hours
973-882-1717
973-882-5155

E-Mail-24 hours
Infocentral
@asme.org

* Information Central staff are not permitted to answer inquiries about the technical content of this code or standard. Information as to whether or not technical inquiries are issued to this code or standard is shown on the copyright page. All technical inquiries must be submitted in writing to the staff secretary. Additional procedures for inquiries may be listed within.

Copyright ASME International
Provided by IHS under license with ASME
No reproduction or networking permitted without license from IHS
Not for Resale

STD.ASME B18.2.3.1M-ENGL 1999 0759670 0614160 393

ISBN 0-7918-2601-5

9 790791 826019

M10099

Copyright ASME International
Provided by IHS under license with ASME
No reproduction or networking permitted without license from IHS

Not for Resale