STD.ASME B18.2.2-ENGL 1987 ■ 0759670 0619705 442 ■

AN AMERICAN NATIONAL STANDARD

Square and Hex Nuts (Inch Series)

ASME/ANSI B18.2.2-1987

REAFFIRMED 1993

FOR CURRENT COMMITTEE PERSONNEL
PLEASE SEE ASME MANUAL AS-11

REAFFIRMED 1999

FOR CURRENT COMMITTEE PERSONNEL
PLEASE SEE ASME MANUAL AS-11

SPONSORED AND PUBLISHED BY

THE AMERICAN SOCIETY OF MECHANICAL ENGINEERS

United Engineering Center 345 East 47th Street New York, N. Y. 10017

Copyright ASME International
Provided by IHS under license with ASME
No reproduction or networking permitted without license from IHS

Not for Resale

Date of Issuance: August 15, 1987

This Standard will be revised when the Society approves the issuance of a new edition. There will be no addenda or written interpretations of the requirements of this Standard issued to this edition.

This code or standard was developed under procedures accredited as meeting the criteria for American National Standards. The Consensus Committee that approved the code or standard was balanced to assure that individuals from competent and concerned interests have had an opportunity to participate. The proposed code or standard was made available for public review and comment which provides an opportunity for additional public input from industry, academia, regulatory agencies, and the public-at-large.

ASME does not "approve," "rate," or "endorse" any item, construction, proprietary device, or activity.

ASME does not take any position with respect to the validity of any patent rights asserted in connection with any items mentioned in this document, and does not undertake to insure anyone utilizing a standard against liability for infringement of any applicable Letters Patent, nor assume any such liability. Users of a code or standard are expressly advised that determination of the validity of any such patent rights, and the risk of infringement of such rights, is entirely their own responsibility.

Participation by federal agency representative(s) or person(s) affiliated with industry is not to be interpreted as government or industry endorsement of this code or standard.

ASME accepts responsibility for only those interpretations issued in accordance with governing ASME procedures and policies which preclude the issuance of interpretations by individual volunteers.

No part of this document may be reproduced in any form,
in an electronic retrieval system or otherwise,
without the prior written permission of the publisher.

Copyright © 1987 by
THE AMERICAN SOCIETY OF MECHANICAL ENGINEERS
All Rights Reserved
Printed in U.S.A.

Copyright ASME International
Provided by IHS under license with ASME
No reproduction or networking permitted without license from IHS

Not for Resale

FOREWORD

(This Foreword is not part of ASME/ANSI B18.2.2-1987.)

American National Standards Committee B18 for the standardization of bolts, screws, nuts, rivets, and similar fasteners was organized in March 1922 as Sectional Committee B18 under the aegis of the American Engineering Standards Committee (later the American Standards Association, then the United States of America Standards Institute and, as of October 6, 1969, the American National Standards Institute, Inc.) with the Society of Automotive Engineers and the American Society of Mechanical Engineers as joint sponsors. Subcommittee 2 was subsequently established and charged with the responsibility for technical content of standards covering wrench head bolts and nuts.

Subcommittee 2, after appraisal of the requirements of industry, developed a proposed standard series of bolt head and nut dimensions. This proposal was finally approved and designated a Tentative American Standard in February 1927.

A first revision of the document was designated as an American Standard in March 1933 and was followed by a second revision which was granted approval as an American Standard in January 1941.

Following reorganization of the B18 Committee in 1947, Subcommittee 2 was asked to expand the standard on head proportions into a complete product standard. A proposal covering square and hexagon head bolts and nuts, hexagon head cap screws, and automotive hexagon head bolts was prepared and submitted to the B18 Committee in April 1950. While this draft was under consideration, the B18 Committee received a proposal from the British Standards Institution for unification of dimensions on products incorporating unified screw threads. The Committee welcomed the opportunity of discussing the proposals and an American-British-Canadian Conference was held in New York on June 1 and 2, 1950.

It was agreed in the conference that the essentials of unification could be accomplished by selection of mutually satisfactory across-the-flats dimensions, since this would permit the use of the same wrenches and because other features would rarely affect interchangeability. After due consideration, suitable existing across-the-flats dimensions were selected for the hexagon products affected.

In its meeting of October 13, 1950, Subcommittee 2 agreed to incorporate in the proposed standard the conference recommendations on ¼ in. hexagon head bolts, ⅝ in. hexagon head cap screws and automotive hexagon head bolts, 5/16 in. and ⅜ in. regular hexagon and square nuts, and 7/16 in. light and regular hexagon and square nuts. At a subsequent meeting of Subcommittee 2, further changes were adopted in order to combine the light and regular series of nuts, and to combine the automotive hexagon head bolt, hexagon head cap screw, and regular hexagon head close tolerance bolt.

In view of the progress made in the United States and the urgency of standardization for mutual defense, the British Standards Institution sponsored a second Conference in London in April 1951 to complete the unification of certain hexagon bolts and nuts.

At a meeting on June 8, 1951, Subcommittee 2 reaffirmed its acceptance of the unified dimensions which correspond with those in the March 1951 draft, but attempted to select better nomenclature for the unified products. A final draft incorporating the nomenclature

Copyright ASME International
Provided by IHS under license with ASME
No reproduction or networking permitted without license from IHS
Not for Resale

"Finished Hexagon Bolts and Nuts" and containing numerous editorial changes was submitted for letter ballot in September 1951. Following approval by the B18 Committee and the sponsors, the proposal was presented to the American Standards Association for approval and designation as an American Standard. This was granted on March 24, 1952.

It being recognized that the standard was in need of additional refinements, Subcommittee 2 began work immediately to eliminate these shortcomings. A proposed revision removing inconsistencies with respect to fillets, improving the length tolerances on heavy hexagon bolts, and incorporating numerous other corrections and clarifications of an editorial nature, resulted. The most noteworthy editorial change was a decision to combine the coverage for hexagon cap screws and square head set screws from the B18.2 standard with the coverage for slotted head cap screws and slotted headless set screws from the B18.6 standard for publication in a separate document. The requirements for the unified hexagon cap screws and finished hexagon bolts being identical in the overlapping sizes, the data would now be available in two publications. Following approvals by the B18 Committee and sponsor organizations, the proposal was submitted to the American Standards Association and declared an American Standard on February 2, 1955.

A revision of this document comprised of numerous editorial corrections and inclusion of an appendix for grade markings was duly approved and designated an American Standard on April 18, 1960.

At a meeting in February 1960, Subcommittee 2 approved a recommendation to reduce the head heights for heavy, heavy semi-finished, and heavy finished hexagon bolts which was subsequently approved by letter ballot of the B18 Committee on August 16, 1960. A proposed standard for heavy hexagon structural bolts submitted and accepted by Subcommittee 2 at its October 17, 1960 meeting was approved by letter ballot of the B18 Committee on May 9, 1961. To meet the urgent needs of the steel construction industry it was considered necessary to publish the standard for the structural bolts immediately. Consequently, Appendix IV to ASA B18.2-1960 containing coverage for the revised heavy hexagon bolts and the new heavy hexagon structural bolts was released in 1962.

In October of 1961, Subcommittee 2 appointed a subgroup to review all product standards for square and hexagon bolts, screws, and nuts, and to recommend simplifications which would be compatible with technical, production, and distribution advances that had occurred over the prior several years. The subgroup presented its recommendations at a meeting of Subcommittee 2 in October of 1962. It being agreed that the internally and externally threaded products should be published in separate documents as suggested, draft proposals for each were completed.

The proposed revision for square and hex nuts incorporated the following subgroup recommendations: discontinuation of regular semi-finished nuts; elimination of regular hexagon and heavy hexagon nuts in sizes ¼ in. through 1 in.; elimination of finished hexagon nuts in sizes larger than 1½ in.; elimination of the washer face semi-finished style on finished series nuts in sizes ⅝ in. and smaller and heavy series nuts in sizes 7/16 in. and smaller; removal of machine screw nuts (these nuts now contained in B18.6.3); and adoption of an abbreviated product nomenclature. Letter ballot of this proposal to the B18 Committee resulted in approval. Following acceptance by the sponsor organizations the revision was submitted to the American Standards Association and designated ASA B18.2.2 on September 8, 1965.

Subcommittee 2 continued to further develop refinements initiated by the simplification subgroup and study changes suggested by consumer interests. This work culminated in Subcommittee acceptance of a 1970 proposal incorporating, in addition to numerous editorial changes, revisions to the requirements on angularity of bearing face and countersink diameters for the various hex nuts and heavy hex nuts, and inclusion of an appendix covering the gaging of slots in slotted nuts. The proposed revision, after approval by letter ballot of the B18 Committee in March 1970, was subsequently approved by the sponsors and submitted

Copyright ASME International
Provided by IHS under license with ASME
No reproduction or networking permitted without license from IHS
Not for Resale

to the American National Standards Institute for designation as an American National Standard. This was granted on January 18, 1972.

A proposed revision of the standard agreed upon by Subcommittee 2 incorporated a provision to enable consumers to specify heavy hex nuts and heavy hex jam nuts with close bearing face angularity, when required; clarified intent with regard to width across flats on nuts produced from bar stock; deleted coverage for hex castle nuts from the appendices; and included numerous editorial refinements. This proposal was formally approved by letter ballot of the subcommittee and the B18 Committee. Following its acceptance by the sponsor organizations the revision was referred to the American National Standards Institute and granted recognition as an American National Standard on February 27, 1987.

Copyright ASME International
Provided by IHS under license with ASME
No reproduction or networking permitted without license from IHS
Not for Resale

ASME STANDARDS COMMITTEE B18
Standardization of Bolts, Nuts, Rivets, Screws, Washers, and Similar Fasteners

(The following is the roster of the Committee at the time of approval of this Standard.)

OFFICERS

J. B. Levy, *Chairman*
H. W. Ellison, *Vice Chairman*
E. Schwartz, *Vice Chairman*
R. W. McGinnis, *Secretary*

COMMITTEE PERSONNEL

AMERICAN SOCIETY OF AGRICULTURAL ENGINEERS
E. R. Friesth, Don E. Williams Co., Rock Island, Illinois

AMERICAN SOCIETY OF MECHANICAL ENGINEERS
A. R. Machell, Webster, New York
K. E. McCullough, SPS Technologies Inc., Jenkintown, Pennsylvania

ENGINE MANUFACTURERS ASSOCIATION
G. A. Russ, Cummins Engine Co., Columbus, Indiana

FARM & INDUSTRIAL EQUIPMENT INSTITUTE
D. A. Clever, Deere & Co., Moline, Illinois

HAND TOOL INSTITUTE
R. B. Wright, Wright Tool Co., Barberton, Ohio

INDUSTRIAL FASTENERS INSTITUTE
D. J. Broomfield, Illinois Tool Works Inc., Elgin, Illinois
D. A. Garrison, Russell, Burdsall & Ward Corp., Rock Falls, Illinois
R. M. Harris, Bethlehem Steel Corp., Lebanon, Pennsylvania
D. Littell, Greensburg, Pennsylvania
J. C. McMurray, *Alternate*, Russell, Burdsall & Ward Inc., Cleveland, Ohio
J. S. Orlando, Chicago, Illinois
E. Sterling, Emhart Corp., Campbellsville, Kentucky
J. A. Trilling, Holo-Krome Co., West Hartford, Connecticut
S. W. Vass, Lake Erie Screw Corp., Cleveland, Ohio
C. J. Wilson, Industrial Fasteners Institute, Cleveland, Ohio

METAL CUTTING TOOL INSTITUTE
D. Emanuelli, TRW — Greenfield Tap & Die, Greenfield, Massachusetts

NATIONAL ELECTRICAL MANUFACTURERS ASSOCIATION
J. B. Levy, Scotia, New York
W. F. Montavon, *Alternate*, National Electrical Manufacturers Association, Washington, D.C.
F. F. Weingruber, Westinghouse Electric Corp., Pittsburgh, Pennsylvania

NATIONAL FASTENERS DISTRIBUTORS ASSOCIATION
J. F. Sullivan, Accurate Fasteners, Inc., South Boston, Massachusetts

Copyright ASME International
Provided by IHS under license with ASME
No reproduction or networking permitted without license from IHS
Not for Resale

SOCIETY OF AUTOMOTIVE ENGINEERS
H. W. Ellison, General Motors Corp., Warren, Michigan
R. S. Piotrowski, Mack Trucks Inc., Allentown, Pennsylvania

TUBULAR & MACHINE INSTITUTE
R. M. Byrne, Trade Association Management Inc., Tarrytown, New York
J. G. Zeratsky, National Rivet & Manufacturing Co., Waupun, Wisconsin

U. S. DEPARTMENT OF THE ARMY
M. E. Taylor, U. S. Army Armament, Munitions & Chemical Command, Dover, New Jersey
A. Herskovitz, *Alternate,* U. S. Army Armament, Munitions & Chemical Command, Dover, New Jersey
J. E. Long, *Alternate,* U. S. Army Tank Command, Warren, Michigan

U. S. DEPARTMENT OF DEFENSE
E. Schwartz, Defense Industrial Supply Center, Philadelphia, Pennsylvania
L. Pieninck, *Alternate,* Defense Industrial Supply Center, Philadelphia, Pennsylvania

U. S. DEPARTMENT OF THE NAVY
J. E. Hass, Department of the Navy, Washington, D.C.
M. S. Orysh, *Alternate,* Department of the Navy, Philadelphia, Pennsylvania

INDIVIDUAL MEMBERS
A. R. Breed, Lakewood, Ohio
R. A. Flor, Chrysler Corp., Detroit, Michigan
G. A. Gobb, Ford Motor Co., Dearborn, Michigan
F. E. Graves, F. E. Graves Assoc., Fairfield, Connecticut
J. J. Naesset, Clark Equipment Co., Battle Creek, Michigan

SUBCOMMITTEE 2 — SQUARE AND HEX BOLTS AND NUTS

S. C. Adamek, Pheoll Mfg. Co., Chicago, Illinois
A. R. Breed, Lakewood, Ohio
R. M. Byrne, Tarrytown, New York
D. A. Clever, Deere & Co., Moline, Illinois
W. J. Derner, FMC Corp., Indianapolis, Indiana
D. A. Garrison, Russell, Burdsall & Ward Corp., Rock Falls, Illinois
F. E. Graves, Fairfield, Connecticut
R. M. Harris, Bethlehem Steel Corp., Lebanon, Pennsylvania
J. B. Levy, Scotia, New York
A. R. Machell, Webster, New York
K. E. McCullough, SPS Technologies, Jenkintown, Pennsylvania
J. C. McMurray, Russell, Burdsall & Ward Corp., Cleveland, Ohio
A. Nebesny, *Alternate,* FMC Corp., Indianapolis, Indiana
I. M. Park, Stelco Wire Products, Ontario, Canada
L. Pieninck, *Alternate,* Defense Industrial Supply Center, Philadelphia, Pennsylvania
R. L. Tennis, Caterpillar Tractor Co., Peoria, Illinois
S. W. Vass, Lake Erie Screw Corp., Cleveland, Ohio
F. F. Weingruber, Westinghouse Electric Corp., Pittsburgh, Pennsylvania
C. J. Wilson, Industrial Fasteners Institute, Cleveland, Ohio

Copyright ASME International
Provided by IHS under license with ASME
No reproduction or networking permitted without license from IHS
Not for Resale

CONTENTS

Foreword iii
Standards Committee Roster vii

1 Introductory Notes 1
2 General Data 1

Tables

1 Dimensions of Square Nuts 3
2 Dimensions of Hex Flat Nuts and Hex Flat Jam Nuts 5
3 Dimensions of Hex Nuts and Hex Jam Nuts 7
4 Dimensions of Hex Slotted Nuts 9
5 Dimensions of Hex Thick Nuts 11
6 Dimensions of Hex Thick Slotted Nuts 13
7 Dimensions of Heavy Square Nuts 15
8 Dimensions of Heavy Hex Flat Nuts and Heavy Hex Flat Jam Nuts 17
9 Dimensions of Heavy Hex Nuts and Heavy Hex Jam Nuts 20
10 Dimensions of Heavy Hex Slotted Nuts 24

Appendices

I Slot Gages and Gaging for Slotted Nuts 27
II Formulas for Nut Dimensions 29
III Wrench Openings Applicable to Square and Hex Nuts 33

Copyright ASME International
Provided by IHS under license with ASME
No reproduction or networking permitted without license from IHS
Not for Resale

SQUARE AND HEX NUTS (INCH SERIES)

1 INTRODUCTORY NOTES

1.1 Scope

1.1.1 This Standard is intended to cover the complete general and dimensional data for the various types of inch series square and hex nuts recognized as "American National Standard." Also included are appendices covering gaging of slots in slotted nuts, wrench openings for nuts, and formulas on which dimensional data are based. It should be understood, however, that where questions arise concerning acceptance of product, the dimensions in the Tables shall govern over recalculation by formula.

1.1.2 The inclusion of dimensional data in this Standard is not intended to imply that all of the products described herein are stock production sizes. Consumers are requested to consult with manufacturers concerning lists of stock production sizes.

1.2 Dimensions

All dimensions in this Standard are in inches, unless stated otherwise.

1.3 Options

Options, where specified, shall be at the discretion of the manufacturer unless otherwise agreed upon by the manufacturer and the purchaser.

1.4 Terminology

For definitions of terms relating to fasteners or component features thereof used in this standard, refer to ANSI B18.12, Glossary of Terms for Mechanical Fasteners.

1.5 Referenced Standards

Copies of referenced ASTM standards may be obtained from ASTM, 1916 Race Street, Philadelphia, Pennsylvania 19103.

Copies of referenced SAE standards may be obtained from the Society of Automotive Engineers, Inc., 400 Commonwealth Drive, Warrendale, PA 15096

2 GENERAL DATA

2.1 Width Across Flats

The width across flats of nut shall be the distance measured, perpendicular to the axis of nut, overall between two opposite sides of the nut in accordance with the notes on respective dimensional tables. For milled-from-bar hex nuts, the nominal bar size used shall be the closest commercially available size to the specified basic width across flats of the nut. For milled-from-bar nonferrous nuts, the tabulated maximum (basic) width across flats dimensions may be exceeded to conform with the commercial tolerances of drawn or rolled bar stock material.

2.2 Nut Thickness

The nut thickness shall be the overall distance, measured parallel to the axis of nut, from the top of the nut to the bearing surface and shall include the thickness of the washer face where provided.

2.3 Threads

Threads shall be Unified Standard, Class 2B, of the series specified in the notes on respective dimensional tables, in accordance with Unified Inch Screw Threads (UN and UNR Thread Form), ANSI B1.1.

2.3.1 Thread Gaging. Unless otherwise specified by the purchaser, gaging for screw thread dimensional acceptability shall be in accordance with Gaging System 21 as specified in ANSI/ASME B1.3M, Screw Thread Gaging Systems for Dimensional Acceptability.

Copyright ASME International
Provided by IHS under license with ASME
No reproduction or networking permitted without license from IHS

Not for Resale

2.4 Finish

Unless otherwise specified, nuts shall be supplied with a natural (as-processed) finish, unplated or uncoated.

2.5 Workmanship

Nuts shall be free from burrs, seams, laps, loose scale, irregular surfaces, and any defects affecting their serviceability.

2.6 Designation

Nuts shall be designated by the following data in the sequence shown: nominal size (fraction or decimal); threads per inch; product name; material (including specification, where necessary); protective finish, if required.

EXAMPLES:

1/2 — 13 Square Nut, Steel, Zinc Plated

3/4 — 16 Hex Nut, SAE J995 Grade 5, Steel

1.000 — 8 Hex Thick Slotted Nut, ASTM F594 (Alloy Group 1) Corrosion Resistant Steel

Copyright ASME International
Provided by IHS under license with ASME
No reproduction or networking permitted without license from IHS

Not for Resale

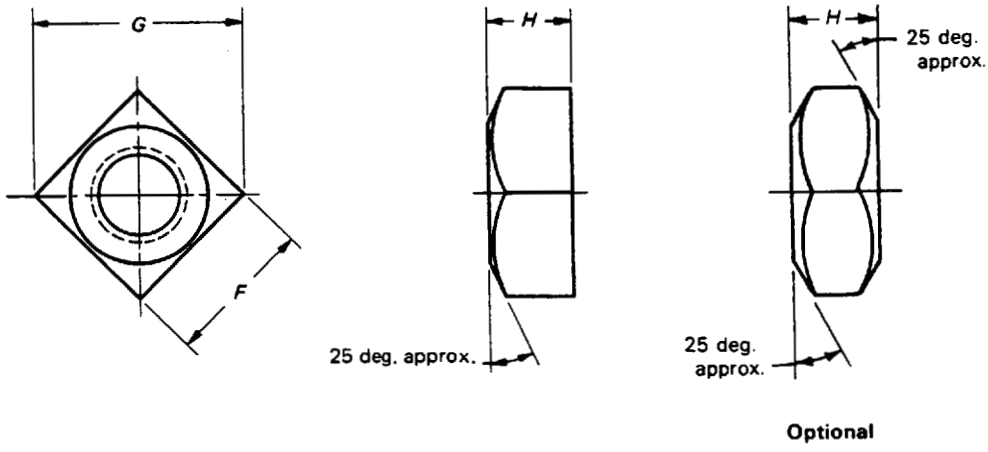

TABLE 1 DIMENSIONS OF SQUARE NUTS

Nominal Size or Basic Major Diam. of Thread		F			G		H		
		Width Across Flats			Width Across Corners		Thickness		
		Basic	Max.	Min.	Max.	Min.	Basic	Max.	Min.
1/4	0.2500	7/16	0.438	0.425	0.619	0.554	7/32	0.235	0.203
5/16	0.3125	9/16	0.562	0.547	0.795	0.721	17/64	0.283	0.249
3/8	0.3750	5/8	0.625	0.606	0.884	0.802	21/64	0.346	0.310
7/16	0.4375	3/4	0.750	0.728	1.061	0.970	3/8	0.394	0.356
1/2	0.5000	13/16	0.812	0.788	1.149	1.052	7/16	0.458	0.418
5/8	0.6250	1	1.000	0.969	1.414	1.300	35/64	0.569	0.525
3/4	0.7500	1 1/8	1.125	1.088	1.591	1.464	21/32	0.680	0.632
7/8	0.8750	1 5/16	1.312	1.269	1.856	1.712	49/64	0.792	0.740
1	1.0000	1 1/2	1.500	1.450	2.121	1.961	7/8	0.903	0.847
1 1/8	1.1250	1 11/16	1.688	1.631	2.386	2.209	1	1.030	0.970
1 1/4	1.2500	1 7/8	1.875	1.812	2.652	2.458	1 3/32	1.126	1.062
1 3/8	1.3750	2 1/16	2.062	1.994	2.917	2.708	1 13/64	1.237	1.169
1 1/2	1.5000	2 1/4	2.250	2.175	3.182	2.956	1 5/16	1.348	1.276
See Note			1						

(For additional requirements refer to Notes on p. 4 and General Data on pp. 1 and 2.)

Copyright ASME International
Provided by IHS under license with ASME
No reproduction or networking permitted without license from IHS Not for Resale

TABLE 1 (CONT'D)

GENERAL NOTES:

(a) Unification. Bolt type indicates products unified dimensionally with British and Canadian standards.

(b) Tops of Nuts. Tops of nuts shall be flat and chamfered or washer crowned. Diameter of the chamfer circle shall be equal to the maximum width across flats within a tolerance of −15%. The surface of the chamfer may be slightly convex or rounded.

(c) Bearing Surface. Bearing surface shall be perpendicular to the axis of the threaded hole within a tolerance of 3 deg. for 1 in. nominal size nuts or smaller, and 2 deg. for nuts larger than 1 in.

(d) True Position of Tapped Hole. The axis of tapped hole shall be located at true position with respect to the axis of nut body within a tolerance zone having a diameter equivalent to 10% of the maximum width across flats, regardless of feature size.

(e) Threads. Threads shall be unified coarse thread series (UNC series), Class 2B.

(f) Material. Unless otherwise specified, chemical and mechanical properties of steel nuts shall conform with Grade A of ASTM A 563, Carbon and Alloy Steel Nuts. Nuts of other materials such as corrosion resistant (stainless) steel, brass, bronze, and aluminum alloys shall have properties as agreed upon between the manufacturer and purchaser. The properties for nuts of several grades of corrosion resistant steel alloys are covered in ASTM F 594, and of several nonferrous materials in ASTM F 467.

NOTE:

(1) Width Across Flats. Maximum width across flats shall not be exceeded (see exception in General Data). No transverse section through the nut between 25% and 75% of the actual nut thickness as measured from the bearing surface shall be less than the minimum width across flats.

Copyright ASME International
Provided by IHS under license with ASME
No reproduction or networking permitted without license from IHS Not for Resale

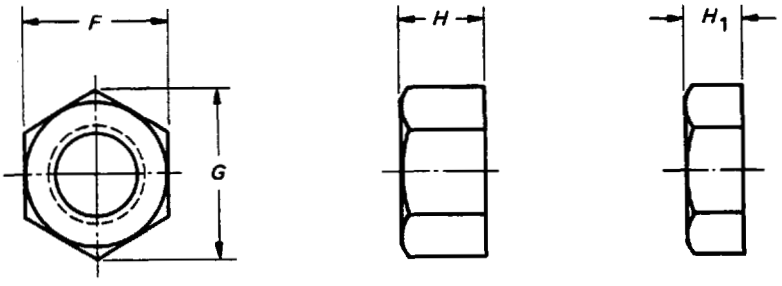

TABLE 2 DIMENSIONS OF HEX FLAT NUTS AND HEX FLAT JAM NUTS

Nominal Size or Basic Major Diam. of Thread		F			G		H			H_1		
		Width Across Flats			Width Across Corners		Thickness Hex Flat Nuts			Thickness Hex Flat Jam Nuts		
		Basic	Max.	Min.	Max.	Min.	Basic	Max.	Min.	Basic	Max.	Min.
1 1/8	1.1250	1 11/16	1.688	1.631	1.949	1.859	1	1.030	0.970	5/8	0.655	0.595
1 1/4	1.2500	1 7/8	1.875	1.812	2.165	2.066	1 3/32	1.126	1.062	3/4	0.782	0.718
1 3/8	1.3750	2 1/16	2.062	1.994	2.382	2.273	1 13/64	1.237	1.169	13/16	0.846	0.778
1 1/2	1.5000	2 1/4	2.250	2.175	2.598	2.480	1 5/16	1.348	1.276	7/8	0.911	0.839
See Notes			1			2						

(For additional requirements refer to Notes on p. 6 and General Data on pp. 1 and 2.)

Copyright ASME International
Provided by IHS under license with ASME
No reproduction or networking permitted without license from IHS
Not for Resale

TABLE 2 (CONT'D)

GENERAL NOTES:

(a) Unification. Bold type indicates products unified dimensionally with British and Canadian standards.

(b) Smaller Sizes. For sizes ¼ in. through 1 in., the nuts specified in Table 3 are recommended.

(c) Tops of Nuts. Tops of nuts shall be flat and chamfered. Diameter of the chamfer circle shall be equal to the maximum width across flats within a tolerance of −15%. The length of chamfer at hex corners shall be from 5% to 15% of the basic thread diameter. The surface of chamfer may be slightly convex or rounded.

(d) Bearing Surface. Bearing surface shall be flat and perpendicular to the axis of the threaded hole within a tolerance of 2 deg.

(e) True Position of Tapped Hole. The axis of tapped hole shall be located at true position with respect to the axis of nut body within a tolerance zone having a diameter equivalent to 4% of the maximum width across flats, regardless of feature size.

(f) Threads. Threads shall be unified coarse thread series (UNC series), Class 2B.

(g) Material. Unless otherwise specified, chemical and mechanical properties of steel nuts shall conform with Grade A of ASTM A 563, Carbon and Alloy Steel Nuts. Nuts of other materials such as corrosion resistant (stainless) steel, brass, bronze, and aluminum alloys shall have properties as agreed upon between the manufacturer and purchaser. The properties for nuts of several grades of corrosion resistant steel alloys are covered in ASTM F 594, and of several nonferrous materials in ASTM F 467.

NOTES:

(1) Width Across Flats. Maximum width across flats shall not be exceeded (see exception in General Data). No transverse section through the nut between 25% and 75% of the actual nut thickness as measured from the bearing surface shall be less than the minimum width across flats. For milled-from-bar nuts, see statement in General Data pertaining to the nominal bar size to be used.

(2) Corner Fill. A rounding or lack of fill at junction of hex corners with chamfer shall be permissible provided the width across corners is within specified limits at and beyond a distance equal to 17.5% of the basic thread diameter from the chamfered face.

Copyright ASME International
Provided by IHS under license with ASME
No reproduction or networking permitted without license from IHS Not for Resale

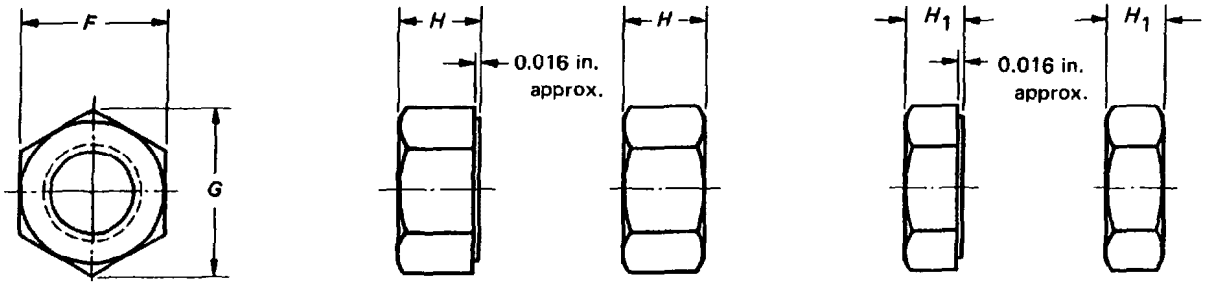

TABLE 3 DIMENSIONS OF HEX NUTS AND HEX JAM NUTS

Nominal Size or Basic Major Diam. of Thread		F			G		H			H_1			Runout of Bearing Face FIM		
													Hex Nuts		Hex Jam Nuts
													Specified Proof Load		
		Width Across Flats			Width Across Corners		Thickness Hex Nuts			Thickness Hex Jam Nuts			Up to 150,000 psi	150,000 psi and Greater	All Strength Levels
		Basic	Max.	Min.	Max.	Min.	Basic	Max.	Min.	Basic	Max.	Min.	Max.		
1/4	0.2500	7/16	0.438	0.428	0.505	0.488	7/32	0.226	0.212	5/32	0.163	0.150	0.015	0.010	0.015
5/16	0.3125	1/2	0.500	0.489	0.577	0.557	17/64	0.273	0.258	3/16	0.195	0.180	0.016	0.011	0.016
3/8	0.3750	9/16	0.562	0.551	0.650	0.628	21/64	0.337	0.320	7/32	0.227	0.210	0.017	0.012	0.017
7/16	0.4375	11/16	0.688	0.675	0.794	0.768	3/8	0.385	0.365	1/4	0.260	0.240	0.018	0.013	0.018
1/2	0.5000	3/4	0.750	0.736	0.866	0.840	7/16	0.448	0.427	5/16	0.323	0.302	0.019	0.014	0.019
9/16	0.5625	7/8	0.875	0.861	1.010	0.982	31/64	0.496	0.473	5/16	0.324	0.301	0.020	0.015	0.020
5/8	0.6250	15/16	0.938	0.922	1.083	1.051	35/64	0.559	0.535	3/8	0.387	0.363	0.021	0.016	0.021
3/4	0.7500	1 1/8	1.125	1.088	1.299	1.240	41/64	0.665	0.617	27/64	0.446	0.398	0.023	0.018	0.023
7/8	0.8750	1 5/16	1.312	1.269	1.516	1.447	3/4	0.776	0.724	31/64	0.510	0.458	0.025	0.020	0.025
1	1.0000	1 1/2	1.500	1.450	1.732	1.653	55/64	0.887	0.831	35/64	0.575	0.519	0.027	0.022	0.027
1 1/8	1.1250	1 11/16	1.688	1.631	1.949	1.859	31/32	0.999	0.939	39/64	0.639	0.579	0.030	0.025	0.030
1 1/4	1.2500	1 7/8	1.875	1.812	2.165	2.066	1 1/16	1.094	1.030	23/32	0.751	0.687	0.033	0.028	0.033
1 3/8	1.3750	2 1/16	2.062	1.994	2.382	2.273	1 11/64	1.206	1.138	25/32	0.815	0.747	0.036	0.031	0.036
1 1/2	1.5000	2 1/4	2.250	2.175	2.598	2.480	1 9/32	1.317	1.245	27/32	0.880	0.808	0.039	0.034	0.039
See Notes			1		2								3		

(For additional requirements refer to Notes on p. 8 and General Data on pp. 1 and 2.)

Copyright ASME International
Provided by IHS under license with ASME
No reproduction or networking permitted without license from IHS
Not for Resale

TABLE 3 (CONT'D)

GENERAL NOTES:

(a) Unification. Bold type indicates products unified dimensionally with British and Canadian standards. Unification of fine thread nuts is limited to sizes 1 in. and smaller.

(b) True Position of Tapped Hole. The axis of tapped hole shall be located at true position with respect to the axis of nut body within a tolerance zone having a diameter equivalent to 4% of the maximum width across flats, regardless of feature size.

(c) Countersink. Tapped hole shall be countersunk on the bearing face or faces. The maximum countersink diameter shall be the thread basic (nominal) major diameter plus 0.030 in. for 3/8 in. nominal size nuts and smaller, and 1.08 times the basic major diameter for nuts larger than 3/8 in. No part of the threaded portion shall project beyond the bearing surface.

(d) Threads. Threads shall be unified coarse, fine, or 8 thread series (UNC, UNF or 8 UN series), Class 2B.

(e) Material. Unless otherwise specified, chemical and mechanical properties of steel nuts shall conform with Grade A of ASTM A 563, Carbon and Alloy Steel Nuts; or Grade 2 of SAE J995, Mechanical and Material Requirements for Steel Nuts. Nuts of other materials such as corrosion resistant (stainless) steel, brass, bronze, and aluminum alloys shall have properties as agreed upon between the manufacturer and purchaser. The properties for nuts of several grades of corrosion resistant steel alloys are covered in ASTM F 594, and of several nonferrous materials in the ASTM F 467.

NOTES:

(1) Width Across Flats. Maximum width across flats shall not be exceeded (see exception in General Data). No transverse action through the nut between 25% and 75% of the actual nut thickness as measured from the bearing surface shall be less than the minimum width across flats. For milled-from-bar nuts, see statement in General Data pertaining to the nominal bar size to be used.

(2) Corner Fill. A rounding or lack of fill at junction of hex corners with chamfer shall be permissible provided the width across corners is within specified limits at and beyond a distance equal to 17.5% of the basic thread diameter from the chamfered faces.

(3) Tops and Bearing Surfaces of Nuts. Nuts in sizes 5/8 in. nominal size and smaller shall be double chamfered. Larger size nuts shall be double chamfered or have washer faced bearing surface and chamfered top.

The diameter of chamfer circle on double chamfered nuts and diameter of washer face shall be within the limits of the maximum width across flats and 95% of the minimum width across flats.

The tops of washer faced nuts shall be flat and the diameter of chamfer circle shall be equal to the maximum width across flats within a tolerance of – 15%. The length of chamfer at hex corners shall be from 5% to 15% of the basic thread diameter. The surface of chamfer may be slightly convex or rounded.

Bearing surfaces shall be flat and perpendicular to the axis of the threaded hole within the FIM limits specified for the respective nut type and strength level.

Copyright ASME International
Provided by IHS under license with ASME
No reproduction or networking permitted without license from IHS Not for Resale

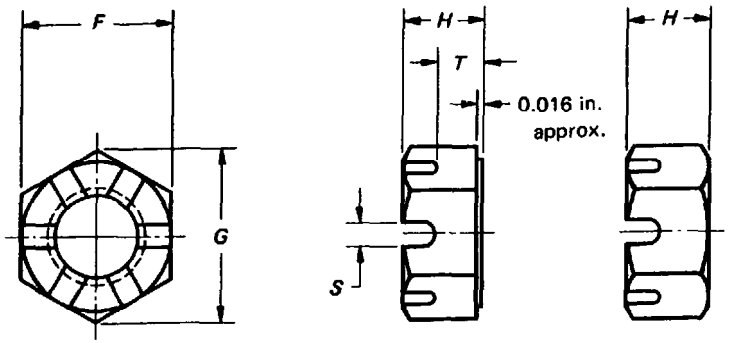

TABLE 4 DIMENSIONS OF HEX SLOTTED NUTS

Nominal Size or Basic Major Diam. of Thread		F			G		H			T		S		Runout of Bearing Surface FIM
		Width Across Flats			Width Across Corners		Thickness			Unslotted Thickness		Width of Slot		
		Basic	Max.	Min.	Max.	Min.	Basic	Max.	Min.	Max.	Min.	Max.	Min.	Max.
1/4	0.2500	7/16	0.438	0.428	0.505	0.488	7/32	0.226	0.212	0.14	0.12	0.10	0.07	0.015
5/16	0.3125	1/2	0.500	0.489	0.577	0.557	17/64	0.273	0.258	0.18	0.16	0.12	0.09	0.016
3/8	0.3750	9/16	0.562	0.551	0.650	0.628	21/64	0.337	0.320	0.21	0.19	0.15	0.12	0.017
7/16	0.4375	11/16	0.688	0.675	0.794	0.768	3/8	0.385	0.365	0.23	0.21	0.15	0.12	0.018
1/2	0.5000	3/4	0.750	0.736	0.866	0.840	7/16	0.448	0.427	0.29	0.27	0.18	0.15	0.019
9/16	0.5625	7/8	0.875	0.861	1.010	0.982	31/64	0.496	0.473	0.31	0.29	0.18	0.15	0.020
5/8	0.6250	15/16	0.938	0.922	1.083	1.051	35/64	0.559	0.535	0.34	0.32	0.24	0.18	0.021
3/4	0.7500	1 1/8	1.125	1.088	1.299	1.240	41/64	0.665	0.617	0.40	0.38	0.24	0.18	0.023
7/8	0.8750	1 5/16	1.312	1.269	1.516	1.447	3/4	0.776	0.724	0.52	0.49	0.24	0.18	0.025
1	1.0000	1 1/2	1.500	1.450	1.732	1.653	55/64	0.887	0.831	0.59	0.56	0.30	0.24	0.027
1 1/8	1.1250	1 11/16	1.688	1.631	1.949	1.859	31/32	0.999	0.939	0.64	0.61	0.33	0.24	0.030
1 1/4	1.2500	1 7/8	1.875	1.812	2.165	2.066	1 1/16	1.094	1.030	0.70	0.67	0.40	0.31	0.033
1 3/8	1.3750	2 1/16	2.062	1.994	2.382	2.273	1 11/64	1.206	1.138	0.82	0.78	0.40	0.31	0.036
1 1/2	1.5000	2 1/4	2.250	2.175	2.598	2.480	1 9/32	1.317	1.245	0.86	0.82	0.46	0.37	0.039
See Notes		1			2					3		3		4

(For additional requirements refer to Notes on p. 10 and General Data on pp. 1 and 2.)

Copyright ASME International
Provided by IHS under license with ASME
No reproduction or networking permitted without license from IHS
Not for Resale

TABLE 4 (CONT'D)

GENERAL NOTES:

(a) Unification. Bold type indicates products unified dimensionally with British and Canadian standards. Unification of fine thread nuts is limited to sizes 1 in. and under.

(b) True Position of Tapped Hole. The axis of tapped hole shall be located at true position with respect to the axis of nut body within a tolerance zone having a diameter equivalent to 4% of the maximum width across flats, regardless of feature size.

(c) Countersink. Tapped hole shall be countersunk on the bearing face. The maximum countersink diameter shall be the thread basic (nominal) major diameter plus 0.030 in. for 3/8 in. nominal size nuts and smaller, and 1.08 times the basic major diameter for nuts larger than 3/8 in. No part of the threaded portion shall project beyond the bearing surface.

(d) Threads. Threads shall be unified coarse, fine, or 8 thread series (UNC, UNF or 8 UN series), Class 2B.

(e) Material. Unless otherwise specified, chemical and mechanical properties of steel nuts shall conform with Grade A of ASTM A 563, Carbon and Alloy Steel Nuts; or Grade 2 of SAE J995, Mechanical and Material Requirements for Steel Nuts. Nuts of other materials such as corrosion resistant (stainless) steel, brass, bronze, and aluminum alloys shall have properties as agreed upon between the manufacturer and purchaser. The properties for nuts of several grades of corrosion resistant steel alloys are covered in ASTM F 594, and of several nonferrous materials in ASTM F 467.

NOTES:

(1) Width Across Flats. Maximum width across flats shall not be exceeded (see exception in General Data). No transverse section through the nut between 25% and 75% of the actual nut thickness as measured from the bearing surface shall be less than the minimum width across flats. For milled-from-bar nuts, see statement in General Data pertaining to the nominal bar size to be used.

(2) Corner Fill. A rounding or lack of fill at junction of hex corners with chamfer shall be permissible provided the width across corners is within specified limits at and beyond a distance equal to 17.5% of the basic thread diameter from the chamfered faces.

(3) Slots. Slots shall be normal to nut flats. Contour of bottom of slots shall be at manufacturer's option. Requirements for gaging slots are in Appendix I.

(4) Tops and Bearing Surfaces of Nuts. Nuts in sizes 5/8 in. nominal size and smaller shall be double chamfered. Larger size nuts shall be double chamfered or have washer faced bearing surface and chamfered top.

The diameter of chamfer circle on double chamfered nuts and diameter of washer face shall be within the limits of the maximum width across flats and 95% of the minimum width across flats.

The top of washer faced nuts shall be flat and the diameter of chamfer circle shall be equal to the maximum width across flats within a tolerance of −15%. The length of chamfer at hex corners shall be from 5% to 15% of the basic thread diameter. The surface of chamfer may be slightly convex or rounded.

Bearing surface shall be flat and perpendicular to the axis of the threaded hole within the specified FIM limit.

Copyright ASME International
Provided by IHS under license with ASME
No reproduction or networking permitted without license from IHS Not for Resale

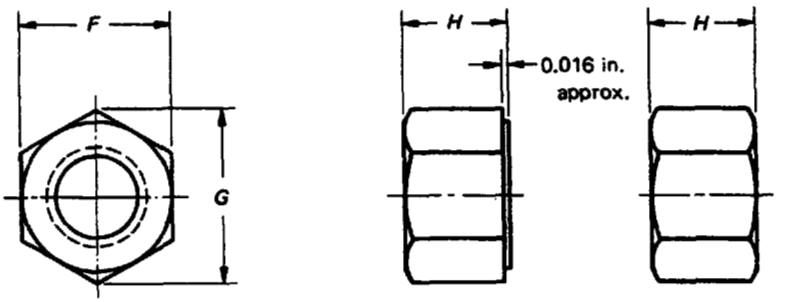

TABLE 5 DIMENSIONS OF HEX THICK NUTS

Nominal Size or Basic Major Diam. of Thread		F			G		H			Runout of Bearing Face FIM	
										Specified Proof Load	
		Width Across Flats			Width Across Corners		Thickness			Up to 150,000 psi	150,000 psi and Greater
		Basic	Max.	Min.	Max.	Min.	Basic	Max.	Min.	Max.	
1/4	0.2500	7/16	0.438	0.428	0.505	0.488	9/32	0.288	0.274	0.015	0.010
5/16	0.3125	1/2	0.500	0.489	0.577	0.557	21/64	0.336	0.320	0.016	0.011
3/8	0.3750	9/16	0.562	0.551	0.650	0.628	13/32	0.415	0.398	0.017	0.012
7/16	0.4375	11/16	0.688	0.675	0.794	0.768	29/64	0.463	0.444	0.018	0.013
1/2	0.5000	3/4	0.750	0.736	0.866	0.840	9/16	0.573	0.552	0.019	0.014
9/16	0.5625	7/8	0.875	0.861	1.010	0.892	39/64	0.621	0.598	0.020	0.015
5/8	0.6250	15/16	0.938	0.922	1.083	1.051	23/32	0.731	0.706	0.021	0.016
3/4	0.7500	1 1/8	1.125	1.088	1.299	1.240	13/16	0.827	0.798	0.023	0.018
7/8	0.8750	1 5/16	1.312	1.269	1.516	1.447	29/32	0.922	0.890	0.025	0.020
1	1.0000	1 1/2	1.500	1.450	1.732	1.653	1	1.018	0.982	0.027	0.022
1 1/8	1.1250	1 11/16	1.688	1.631	1.949	1.859	1 5/32	1.176	1.136	0.030	0.025
1 1/4	1.2500	1 7/8	1.875	1.812	2.165	2.066	1 1/4	1.272	1.228	0.033	0.028
1 3/8	1.3750	2 1/16	2.062	1.994	2.382	2.273	1 3/8	1.399	1.351	0.036	0.031
1 1/2	1.5000	2 1/4	2.250	2.175	2.598	2.480	1 1/2	1.526	1.474	0.039	0.034
See Notes		1			2					3	

(For additional requirements refer to Notes on p. 12 and General Data on pp. 1 and 2.)

Copyright ASME International
Provided by IHS under license with ASME
No reproduction or networking permitted without license from IHS Not for Resale

TABLE 5 (CONT'D)

GENERAL NOTES:

(a) True Position of Tapped Hole. The axis of tapped hole shall be located at true position with respect to the axis of nut body within a tolerance zone having a diameter equivalent to 4% of the maximum width across flats, regardless of feature size.

(b) Countersink. Tapped hole shall be countersunk on the bearing face or faces. The maximum countersink diameter shall be the thread basic (nominal) major diameter plus 0.030 in. for 3/8 in. nominal size nuts and smaller, and 1.08 times the basic major diameter for nuts larger than 3/8 in. No part of the threaded portion shall project beyond the bearing surface.

(c) Threads. Threads shall be unified coarse, fine, or 8 thread series (UNC, UNF or 8 UN series), Class 2B.

(d) Material. Unless otherwise specified, chemical and mechanical properties of steel nuts shall conform with Grade A of ASTM A 563, Carbon and Alloy Steel Nuts; or Grade 2 of SAE J995, Mechanical and Material Requirements for Steel Nuts. Nuts of other materials such as corrosion resistant (stainless) steel, brass, bronze, and aluminum alloys shall have properties as agreed upon between the manufacturer and purchaser. The properties for nuts of several grades of corrosion resistant steel alloys are covered in ASTM F 594, and of several nonferrous materials in ASTM F 467.

NOTES:

(1) Width Across Flats. Maximum width across flats shall not be exceeded (see exception in General Data). No transverse section through the nut between 25% and 75% of the actual nut thickness as measured from the bearing surface shall be less than the minimum width across flats. For milled-from-bar nuts, see statement in General Data pertaining to the nominal bar size to be used.

(2) Corner Fill. A rounding or lack of fill at junction of hex corners with chamfer shall be permissible provided the width across corners is within specified limits at and beyond a distance equal to 17.5% of the basic thread diameter from the chamfered faces.

(3) Tops and Bearing Surfaces of Nuts. Nuts in sizes 5/8 in. nominal size and smaller shall be double chamfered. Larger size nuts shall be double chamfered or have washer faced bearing surface and chamfered top.

The diameter of chamfer circle on double chamfered nuts and diameter of washer face shall be within the limits of the maximum width across flats and 95% of the minimum width across flats.

The tops of washer faced nuts shall be flat and the diameter of chamfer circle shall be equal to the maximum width across flats within a tolerance of −15%. The length of chamfer at hex corners shall be from 5% to 15% of the basic thread diameter. The surface of chamfer may be slightly convex or rounded.

Bearing surfaces shall be flat and perpendicular to the axis of the threaded hole within the FIM limits specified for the respective strength level.

Copyright ASME International
Provided by IHS under license with ASME
No reproduction or networking permitted without license from IHS Not for Resale

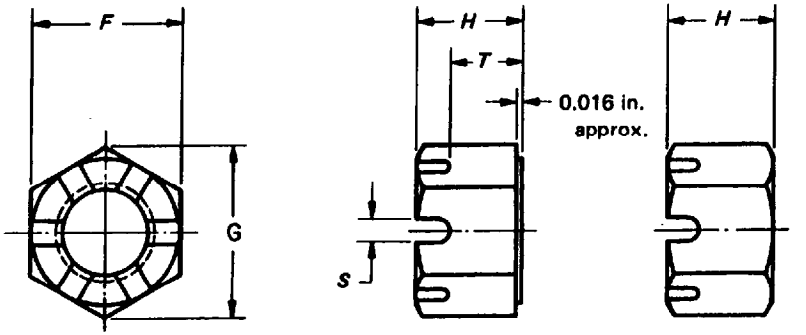

TABLE 6 DIMENSIONS OF HEX THICK SLOTTED NUTS

Nominal Size or Basic Major Diam. of Thread		F			G		H			T		S		Runout of Bearing Surface FIM
		Width Across Flats			Width Across Corners		Thickness			Unslotted Thickness		Width of Slot		
		Basic	Max.	Min.	Max.	Min.	Basic	Max.	Min.	Max.	Min.	Max.	Min.	Max.
1/4	0.2500	7/16	0.438	0.428	0.505	0.488	9/32	0.288	0.274	0.20	0.18	0.10	0.07	0.015
5/16	0.3125	1/2	0.500	0.489	0.577	0.557	21/64	0.336	0.320	0.24	0.22	0.12	0.09	0.016
3/8	0.3750	9/16	0.562	0.551	0.650	0.628	13/32	0.415	0.398	0.29	0.27	0.15	0.12	0.017
7/16	0.4375	11/16	0.688	0.675	0.794	0.768	29/64	0.463	0.444	0.31	0.29	0.15	0.12	0.018
1/2	0.5000	3/4	0.750	0.736	0.866	0.840	9/16	0.573	0.552	0.42	0.40	0.18	0.15	0.019
9/16	0.5625	7/8	0.875	0.861	1.010	0.982	37/64	0.621	0.598	0.43	0.41	0.18	0.15	0.020
5/8	0.6250	15/16	0.938	0.922	1.083	1.051	23/32	0.731	0.706	0.51	0.49	0.24	0.18	0.021
3/4	0.7500	1 1/8	1.125	1.088	1.299	1.240	13/16	0.827	0.798	0.57	0.55	0.24	0.18	0.023
7/8	0.8750	1 5/16	1.312	1.269	1.516	1.447	29/32	0.922	0.890	0.67	0.64	0.24	0.18	0.025
1	1.0000	1 1/2	1.500	1.450	1.732	1.653	1	1.018	0.982	0.73	0.70	0.30	0.24	0.027
1 1/8	1.1250	1 11/16	1.688	1.631	1.949	1.859	1 5/32	1.176	1.136	0.83	0.80	0.33	0.24	0.030
1 1/4	1.2500	1 7/8	1.875	1.812	2.165	2.066	1 1/4	1.272	1.228	0.89	0.86	0.40	0.31	0.033
1 3/8	1.3750	2 1/16	2.062	1.994	2.382	2.273	1 3/8	1.399	1.351	1.02	0.98	0.40	0.31	0.036
1 1/2	1.5000	2 1/4	2.250	2.175	2.598	2.480	1 1/2	1.526	1.474	1.08	1.04	0.46	0.37	0.039
See Notes			1		2					3		3		4

(For additional requirements refer to Notes on p. 14 and General Data on pp. 1 and 2.)

Copyright ASME International
Provided by IHS under license with ASME
No reproduction or networking permitted without license from IHS

Not for Resale

TABLE 6 (CONT'D)

GENERAL NOTES:

(a) Unification. Bold type indicates products unified dimensionally with British and Canadian standards. Unification of fine thread products is limited to sizes 1 in. and under.

(b) True Position of Tapped Hole. The axis of tapped hole shall be located at true position with respect to the axis of nut body within a tolerance zone having a diameter equivalent to 4% of the maximum width across flats, regardless of feature size.

(c) Countersink. Tapped hole shall be countersunk on the bearing face. The maximum countersink diameter shall be the thread basic (nominal) major diameter plus 0.030 in. for 3/8 in. nominal size nuts and smaller, and 1.08 times the basic major diameter for nuts larger than 3/8 in. No part of the threaded portion shall project beyond the bearing surface.

(d) Threads. Threads shall be unified coarse, fine, or 8 thread series (UNC, UNF or 8 UN series), Class 2B.

(e) Material. Unless otherwise specified, chemical and mechanical properties of steel nuts shall conform with Grade A of ASTM A 563, Carbon and Alloy Steel Nuts; or Grade 2 of SAE J995, Mechanical and Material Requirements for Steel Nuts. Nuts of other materials such as corrosion resistant (stainless) steel, brass, bronze, and aluminum alloys shall have properties as agreed upon between the manufacturer and purchaser. The properties for nuts of several grades of corrosion resistant steel alloys are covered in ASTM F 594, and of several nonferrous materials in ASTM F 467.

NOTES:

(1) Width Across Flats. Maximum width across flats shall not be exceeded (see exception in General Data). No transverse section through the nut between 25% and 75% of the actual nut thickness as measured from the bearing surface shall be less than the minimum width across flats. For milled-from-bar nuts, see statement in General Data pertaining to the nominal bar size to be used.

(2) Corner Fill. A rounding or lack of fill at junction of hex corners with chamfer shall be permissible provided the width across corners is within specified limits at and beyond a distance equal to 17.5% of the basic thread diameter from the chamfered faces.

(3) Slots. Slots shall be normal to nut flats. Contour of bottom of slots shall be at manufacturer's option. Requirements for gaging slots are in Appendix I.

(4) Tops and Bearing Surfaces of Nuts. Nuts in sizes 5/8 in. nominal size and smaller shall be double chamfered. Larger size nuts shall be double chamfered or have washer faced bearing surface and chamfered top.

The diameter of chamfer circle on double chamfered nuts and diameter of washer face shall be within the limits of the maximum width across flats and 95% of the minimum width across flats.

The top of washer faced nuts shall be flat and the diameter of chamfer circle shall be equal to the maximum width across flats within a tolerance of −15%. The length of chamfer at hex corners shall be from 5% to 15% of the basic thread diameter. The surface of chamfer may be slightly convex or rounded.

Bearing surface shall be flat and perpendicular to the axis of the threaded hole within the FIM limits specified for the respective strength level.

Copyright ASME International
Provided by IHS under license with ASME
No reproduction or networking permitted without license from IHS Not for Resale

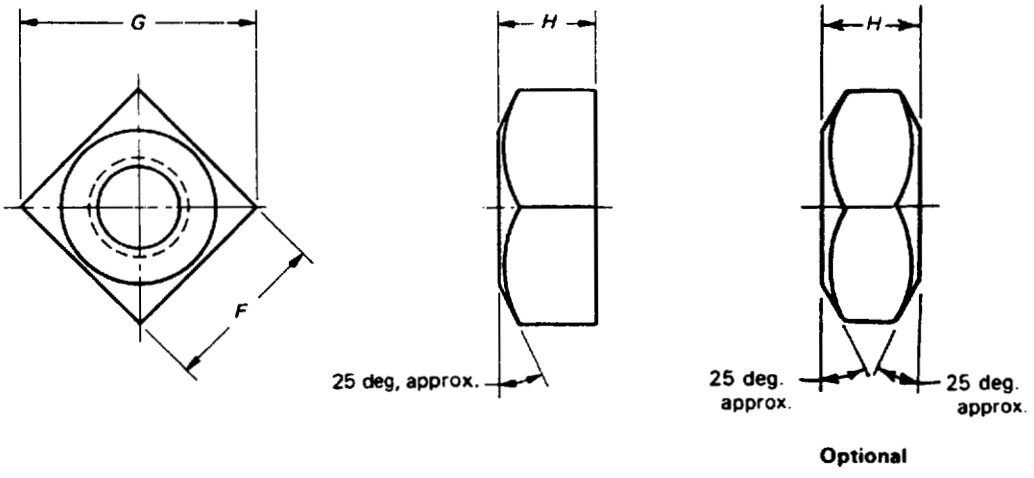

TABLE 7 DIMENSIONS OF HEAVY SQUARE NUTS

Nominal Size or Basic Major Diam. of Thread		F			G		H		
		Width Across Flats			Width Across Corners		Thickness		
		Basic	Max.	Min.	Max.	Min.	Basic	Max.	Min.
1/4	0.2500	1/2	0.500	0.488	0.707	0.640	1/4	0.266	0.218
5/16	0.3125	9/16	0.562	0.546	0.795	0.720	5/16	0.330	0.280
3/8	0.3750	11/16	0.688	0.669	0.973	0.889	3/8	0.393	0.341
7/16	0.4375	3/4	0.750	0.728	1.060	0.970	7/16	0.456	0.403
1/2	0.5000	7/8	0.875	0.850	1.237	1.137	1/2	0.520	0.464
5/8	0.6250	1 1/16	1.062	1.031	1.503	1.386	5/8	0.647	0.587
3/4	0.7500	1 1/4	1.250	1.212	1.768	1.635	3/4	0.771	0.710
7/8	0.8750	1 7/16	1.438	1.394	2.033	1.884	7/8	0.901	0.833
1	1.0000	1 5/8	1.625	1.575	2.298	2.132	1	1.028	0.956
1 1/8	1.1250	1 13/16	1.812	1.756	2.563	2.381	1 1/8	1.155	1.079
1 1/4	1.2500	2	2.000	1.938	2.828	2.631	1 1/4	1.282	1.187
1 3/8	1.3750	2 3/16	2.188	2.119	3.094	2.879	1 3/8	1.409	1.310
1 1/2	1.5000	2 3/8	2.375	2.300	3.359	3.128	1 1/2	1.536	1.433
See Note		1							

(For additional requirements refer to Notes on p. 16 and General Data on pp. 1 and 2.)

Copyright ASME International
Provided by IHS under license with ASME
No reproduction or networking permitted without license from IHS Not for Resale

TABLE 7 (CONT'D)

GENERAL NOTES:

(a) Tops of Nuts. Tops of nuts shall be flat and chamfered or washer crowned. Diameter of the chamfer circle shall be equal to the maximum width across flats within a tolerance of −15%. The surface of chamfer may be slightly convex or rounded.

(b) Bearing Surface. Bearing surface shall be perpendicular to the axis of the threaded hole within a tolerance of 3 deg. for 1 in. nominal size nuts and smaller, and 2 deg. for nuts larger than 1 in.

(c) True Position of Tapped Hole. The axis of tapped hole shall be located at true position with respect to the axis of nut body within a tolerance zone having a diameter equivalent to 10% of the maximum width across flats, regardless of feature size.

(d) Threads. Threads shall be unified coarse thread series (UNC series), Class 2B.

(e) Material. Unless otherwise specified, chemical and mechanical properties of steel nuts shall conform with Grade A of ASTM A 563, Carbon and Alloy Steel Nuts. Nuts of other materials such as corrosion resistant (stainless) steel, brass, bronze, and aluminum alloys shall have properties as agreed upon between the manufacturer and purchaser. The properties for nuts of several grades of corrosion resistant steel alloys are covered in ASTM F 594, and of several nonferrous materials in ASTM F 467.

NOTE:

(1) Width Across Flats. Maximum width across flats shall not be exceeded (see exception in General Data). No transverse section through the nut between 25% and 75% of the actual nut thickness as measured from the bearing surface shall be less than the minimum width across flats.

Copyright ASME International
Provided by IHS under license with ASME
No reproduction or networking permitted without license from IHS Not for Resale

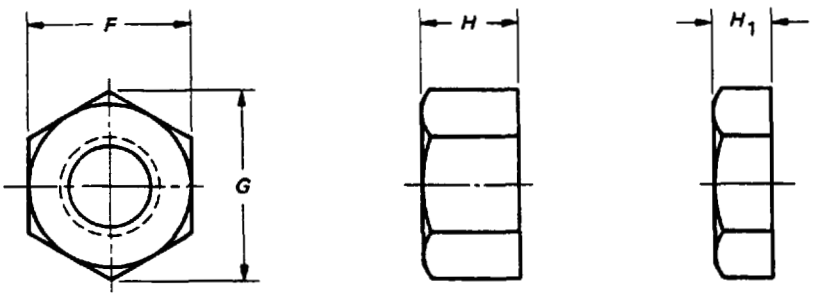

TABLE 8 DIMENSIONS OF HEAVY HEX FLAT NUTS AND HEAVY HEX FLAT JAM NUTS

Nominal Size or Basic Major Diam. of Thread		F			G		H			H_1		
		Width Across Flats			Width Across Corners		Thickness Heavy Hex Flat Nuts			Thickness Heavy Hex Flat Jam Nuts		
		Basic	Max.	Min.	Max.	Min.	Basic	Max.	Min.	Basic	Max.	Min.
1 1/8	1.1250	1 13/16	1.812	1.756	2.093	2.002	1 1/8	1.155	1.079	5/8	0.655	0.579
1 1/4	1.2500	2	2.000	1.938	2.309	2.209	1 1/4	1.282	1.187	3/4	0.782	0.687
1 3/8	1.3750	2 3/16	2.188	2.119	2.526	2.416	1 3/8	1.409	1.310	13/16	0.846	0.747
1 1/2	1.5000	2 3/8	2.375	2.300	2.742	2.622	1 1/2	1.536	1.433	7/8	0.911	0.808
1 3/4	1.7500	2 3/4	2.750	2.662	3.175	3.035	1 3/4	1.790	1.679	1	1.040	0.929
2	2.0000	3 1/8	3.125	3.025	3.608	3.449	2	2.044	1.925	1 1/8	1.169	1.050
2 1/4	2.2500	3 1/2	3.500	3.388	4.041	3.862	2 1/4	2.298	2.155	1 1/4	1.298	1.155
2 1/2	2.5000	3 7/8	3.875	3.750	4.474	4.275	2 1/2	2.552	2.401	1 1/2	1.552	1.401
2 3/4	2.7500	4 1/4	4.250	4.112	4.907	4.688	2 3/4	2.806	2.647	1 5/8	1.681	1.522
3	3.0000	4 5/8	4.625	4.475	5.340	5.102	3	3.060	2.893	1 3/4	1.810	1.643
3 1/4	3.2500	5	5.000	4.838	5.774	5.515	3 1/4	3.314	3.124	1 7/8	1.939	1.748
3 1/2	3.5000	5 3/8	5.375	5.200	6.207	5.928	3 1/2	3.568	3.370	2	2.068	1.870
3 3/4	3.7500	5 3/4	5.750	5.562	6.640	6.341	3 3/4	3.822	3.616	2 1/8	2.197	1.990
4	4.0000	6 1/8	6.125	5.925	7.073	6.755	4	4.076	3.862	2 1/4	2.326	2.112
See Notes		1			2							

(For additional requirements refer to Notes on p. 18 and General Data on pp. 1 and 2.)

Copyright ASME International
Provided by IHS under license with ASME
No reproduction or networking permitted without license from IHS Not for Resale

TABLE 8 (CONT'D)

GENERAL NOTES:

(a) Unification. Bold type indicates products unified dimensionally with British and Canadian standards.

(b) Smaller Sizes. For sizes ¼ in. through 1 in., the nuts specified in Table 9 are recommended.

(c) Tops of Nuts. Tops of nuts shall be flat and chamfered. Diameter of the chamfer circle shall be equal to the maximum width across flats within a tolerance of −15%. The length of chamfer at hex corners shall be from 5% to 15% of the basic thread diameter. The surface of chamfer may be slightly convex or rounded.

(d) Bearing Surface. Bearing surface shall be flat and perpendicular to the axis of the threaded hole within a tolerance of 2 deg.

(e) True Position of Tapped Hole. The axis of tapped hole shall be located at true position with respect to the axis of nut body within a tolerance zone having a diameter equivalent to 4% of the maximum width across flats for 1½ in. nominal size nuts or smaller and 6% of the maximum width across flats for nuts larger than 1½ in., regardless of feature size.

(f) Threads. Threads shall be unified coarse thread series (UNC series), Class 2B.

(g) Material. Unless otherwise specified, chemical and mechanical properties of steel nuts shall conform with Grade A of ASTM A 563, Carbon and Alloy Steel Nuts. Nuts of other materials such as corrosion resistant (stainless) steel, brass, bronze, and aluminum alloys shall have properties as agreed upon between the manufacturer and purchaser. The properties for nuts of several grades of corrosion resistant steel alloys are covered in ASTM F 594, and of several nonferrous materials in ASTM F 467.

NOTES:

(1) Width Across Flats. Maximum width across flats shall not be exceeded (see exception in General Data). No transverse section through the nut between 25% and 75% of the actual nut thickness as measured from the bearing surface shall be less than the minimum width across flats. For milled-from-bar nuts, see statement in General Data pertaining to the nominal bar size to be used.

(2) Corner Fill. A rounding or lack of fill at junction of hex corners with chamfer shall be permissible provided the width across corners is within specified limits at and beyond a distance equal to 17.5% of the basic thread diameter from the chamfered face.

Copyright ASME International
Provided by IHS under license with ASME
No reproduction or networking permitted without license from IHS Not for Resale

(Table 9 begins on following page.)

Copyright ASME International
Provided by IHS under license with ASME
No reproduction or networking permitted without license from IHS Not for Resale

TABLE 9

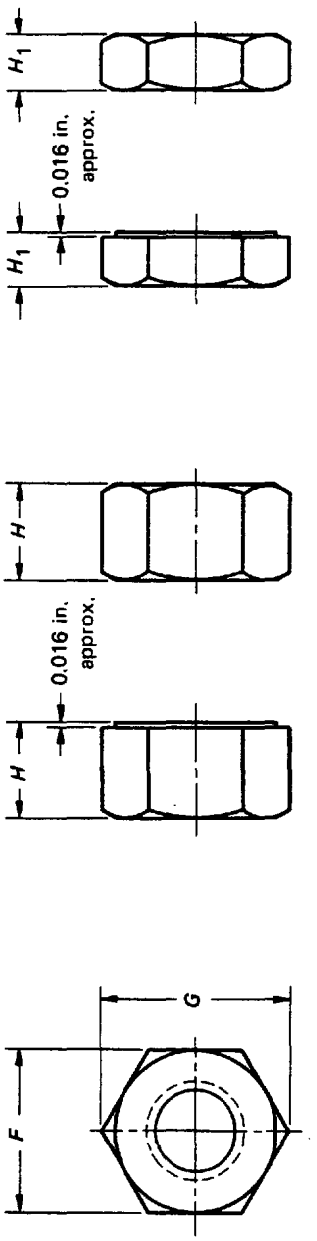

Not for Resale

Copyright ASME International
Provided by IHS under license with ASME
No reproduction or networking permitted without license from IHS

TABLE 9 DIMENSIONS OF HEAVY HEX NUTS AND HEAVY HEX JAM NUTS

Nominal Size or Basic Major Diam. of Thread		*F* Width Across Flats			*G* Width Across Corners		*H* Thickness Heavy Hex Nuts			*H*$_1$ Thickness Heavy Hex Jam Nuts			Runout of Bearing Face FIM		
													Heavy Hex Nuts		Heavy Hex Jam Nuts
													Specified Proof Load		
													Up to 150,000 psi	150,000 psi and Greater	All Strength Levels
		Basic	Max.	Min.	Max.	Min.	Basic	Max.	Min.	Basic	Max.	Min.	Max.		
1/4	0.2500	1/2	0.500	0.488	0.577	0.556	15/64	0.250	0.218	11/64	0.188	0.156	0.017	0.011	0.017
5/16	0.3125	9/16	0.562	0.546	0.650	0.622	19/64	0.314	0.280	13/64	0.220	0.186	0.020	0.012	0.020
3/8	0.3750	11/16	0.688	0.669	0.794	0.763	23/64	0.377	0.341	15/64	0.252	0.216	0.021	0.014	0.021
7/16	0.4375	3/4	0.750	0.728	0.866	0.830	27/64	0.441	0.403	17/64	0.285	0.247	0.022	0.015	0.022
1/2	**0.5000**	7/8	**0.875**	**0.850**	**1.010**	**0.969**	31/64	**0.504**	**0.464**	19/64	**0.317**	**0.277**	0.023	0.016	0.023
9/16	0.5625	15/16	0.938	0.909	1.083	1.037	35/64	0.568	0.526	21/64	0.349	0.307	0.024	0.017	0.024
5/8	**0.6250**	1 1/16	**1.062**	**1.031**	**1.227**	**1.175**	39/64	**0.631**	**0.587**	23/64	**0.381**	**0.337**	0.025	0.018	0.025
3/4	**0.7500**	1 1/4	**1.250**	**1.212**	**1.443**	**1.382**	47/64	**0.758**	**0.710**	27/64	**0.446**	**0.398**	0.027	0.020	0.027
7/8	**0.8750**	1 7/16	**1.438**	**1.394**	**1.660**	**1.589**	55/64	**0.885**	**0.833**	31/64	**0.510**	**0.458**	0.029	0.022	0.029
1	**1.0000**	1 5/8	**1.625**	**1.575**	**1.876**	**1.796**	63/64	**1.012**	**0.956**	35/64	**0.575**	**0.519**	0.031	0.024	0.031
1 1/8	**1.1250**	1 13/16	**1.812**	**1.756**	**2.093**	**2.002**	1 7/64	**1.139**	**1.079**	39/64	**0.639**	**0.579**	0.033	0.027	0.033
1 1/4	**1.2500**	2	**2.000**	**1.938**	**2.309**	**2.209**	1 7/32	**1.251**	**1.187**	23/32	**0.751**	**0.687**	0.035	0.030	0.035
1 3/8	**1.3750**	2 3/16	**2.188**	**2.119**	**2.526**	**2.416**	1 11/32	**1.378**	**1.310**	25/32	**0.815**	**0.747**	0.038	0.033	0.038
1 1/2	**1.5000**	2 3/8	**2.375**	**2.300**	**2.742**	**2.622**	1 15/32	**1.505**	**1.433**	27/32	**0.880**	**0.808**	0.041	0.036	0.041
1 5/8	1.6250	2 9/16	2.562	2.481	2.959	2.828	1 19/32	1.632	1.556	29/32	0.944	0.868	0.044	0.038	0.044
1 3/4	**1.7500**	2 3/4	**2.750**	**2.662**	**3.175**	**3.035**	1 23/32	**1.759**	**1.679**	31/32	**1.009**	**0.929**	0.048	0.041	0.048
1 7/8	1.8750	2 15/16	2.938	2.844	3.392	3.242	1 27/32	1.886	1.802	1 1/32	1.073	0.989	0.051	0.044	0.051
2	**2.0000**	3 1/8	**3.125**	**3.025**	**3.608**	**3.449**	1 31/32	**2.013**	**1.925**	1 3/32	**1.138**	**1.050**	0.055	0.047	0.055
2 1/4	2.2500	3 1/2	3.500	3.388	4.041	3.862	2 13/64	2.251	2.155	1 13/64	1.251	1.155	0.061	0.052	0.061
2 1/2	2.5000	3 7/8	3.875	3.750	4.474	4.275	2 29/64	2.505	2.401	1 29/64	1.505	1.401	0.068	0.058	0.068
2 3/4	2.7500	4 1/4	4.250	4.112	4.907	4.688	2 45/64	2.759	2.647	1 37/64	1.634	1.522	0.071	0.064	0.074
3	3.0000	4 5/8	4.625	4.475	5.340	5.102	2 61/64	3.013	2.893	1 45/64	1.763	1.643	0.081	0.070	0.081
3 1/4	3.2500	5	5.000	4.838	5.774	5.515	3 3/16	3.252	3.124	1 13/16	1.876	1.748	0.087	0.075	0.087
3 1/2	3.5000	5 3/8	5.375	5.200	6.207	5.928	3 7/16	3.506	3.370	1 15/16	2.006	1.870	0.094	0.081	0.094
3 3/4	3.7500	5 3/4	5.750	5.562	6.640	6.341	3 11/16	3.760	3.616	2 1/16	2.134	1.990	0.100	0.087	0.100
4	4.0000	6 1/8	6.125	5.925	7.073	6.755	3 15/16	4.014	3.862	2 3/16	2.264	2.112	0.107	0.093	0.107
See Notes			1		2								3		

(For additional requirements refer to Notes on p. 22 and General Data on pp. 1 and 2.)

Copyright ASME International
Provided by IHS under license with ASME
No reproduction or networking permitted without license from IHS
Not for Resale

TABLE 9 (CONT'D)

GENERAL NOTES:

(a) Unification. Bold type indicates products unified dimensionally with British and Canadian standards. Unification of fine thread products is limited to sizes 1 in. and under.

(b) True Position of Tapped Hole. The axis of tapped hole shall be located at true position with respect to the axis of nut body within a tolerance zone having a diameter equivalent to 4% of the maximum width across flats for 1 ½ in. nominal size nuts or smaller, and 6% of the maximum width across flats for nuts larger than 1 ½ in., regardless of feature size.

(c) Countersink. Tapped hole shall be countersunk on the bearing face or faces. The maximum countersink diameter shall be the thread basic (nominal) major diameter plus 0.030 in. for ⅜ in. nominal size nuts and smaller, and 1.08 times the basic major diameter for nuts larger than ⅜ in. No part of the threaded portion shall project beyond the bearing surface.

(d) Threads. Threads shall be unified coarse, fine, or 8 thread series (UNC, UNF or 8 UN series), Class 2B. Unless otherwise specified, coarse thread series shall be furnished.

(e) Material. Unless otherwise specified, chemical and mechanical properties of steel nuts shall conform with Grade A of ASTM A 563, Carbon and Alloy Steel Nuts; or Grade 2 of SAE J995, Mechanical and Material Requirements for Steel Nuts. Nuts of other materials such as corrosion resistant (stainless) steel, brass, bronze, and aluminum alloys shall have properties as agreed upon between the manufacturer and purchaser. The properties for nuts of several grades of corrosion resistant steel alloys are covered in ASTM F 594, and of several nonferrous materials in the ASTM F 467.

NOTES:

(1) Width Across Flats. Maximum width across flats shall not be exceeded (see exception in General Data). No transverse action through the nut between 25% and 75% of the actual nut thickness as measured from the bearing surface shall be less than the minimum width across flats. For milled-from-bar nuts, see statement in General Data pertaining to the nominal bar size to be used.

(2) Corner Fill. A rounding or lack of fill at junction of hex corners with chamfer shall be permissible provided the width across corners is within specified limits at and beyond a distance equal to 17.5% of the basic thread diameter from the chamfered faces.

(3) Tops and Bearing Surfaces of Nuts. Nuts in sizes 7/16 in. nominal size and smaller shall be double chamfered. Larger size nuts shall be double chamfered or have washer faced bearing surface and chamfered top.

The diameter of chamfer circle on double chamfered nuts and diameter of washer face shall be within the limits of the maximum width across flats and 95% of the minimum width across flats.

The tops of washer faced nuts shall be flat and the diameter of chamfer circle shall be equal to the maximum width across flats within a tolerance of −15%. The length of chamfer at hex corners shall be from 5% to 15% of the basic thread diameter. The surface of chamfer may be slightly convex or rounded.

Bearing surfaces shall be flat and, unless otherwise specified, shall be perpendicular to the axis of the threaded hole within the FIM limits tabulated for the respective nut size, type, and strength level. Where purchaser specifies close runout of bearing face style heavy hex or heavy hex jam nuts in nominal sizes 2 in. through 4 in., nuts shall be so processed as to have a maximum bearing face runout of 0.010 in. FIM.

Copyright ASME International
Provided by IHS under license with ASME
No reproduction or networking permitted without license from IHS Not for Resale

(Table 10 begins on following page.)

Copyright ASME International
Provided by IHS under license with ASME
No reproduction or networking permitted without license from IHS
Not for Resale

TABLE 10

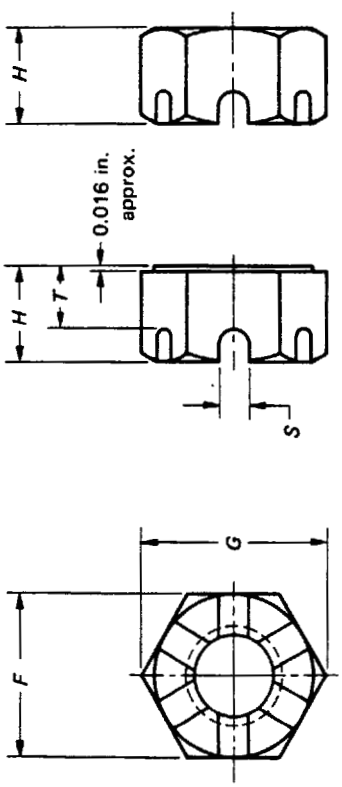

Copyright ASME International
Provided by IHS under license with ASME
No reproduction or networking permitted without license from IHS
Not for Resale

TABLE 10 DIMENSIONS OF HEAVY HEX SLOTTED NUTS

Nominal Size or Basic Major Diam. of Thread		F			G		H			T		S		Runout of Bearing Surface FIM
		Width Across Flats			Width Across Corners		Thickness			Unslotted Thickness		Width of Slot		
		Basic	Max.	Min.	Max.	Min.	Basic	Max.	Min.	Max.	Min.	Max.	Min.	Max.
1/4	0.2500	1/2	0.500	0.488	0.577	0.556	15/64	0.250	0.218	0.15	0.13	0.10	0.07	0.017
5/16	0.3125	9/16	0.562	0.546	0.650	0.622	19/64	0.314	0.280	0.21	0.19	0.12	0.09	0.020
3/8	0.3750	11/16	0.688	0.669	0.794	0.763	23/64	0.377	0.341	0.24	0.22	0.15	0.12	0.021
7/16	0.4375	3/4	0.750	0.728	0.866	0.830	27/64	0.441	0.403	0.28	0.26	0.15	0.12	0.022
1/2	0.5000	7/8	0.875	0.850	1.010	0.969	31/64	0.504	0.464	0.34	0.32	0.18	0.15	0.023
9/16	0.5625	15/16	0.938	0.909	1.083	1.037	35/64	0.568	0.526	0.37	0.35	0.18	0.15	0.024
5/8	0.6250	1 1/16	1.062	1.031	1.227	1.175	39/64	0.631	0.587	0.40	0.38	0.24	0.18	0.025
3/4	0.7500	1 1/4	1.250	1.212	1.443	1.382	47/64	0.758	0.710	0.49	0.47	0.24	0.18	0.027
7/8	0.8750	1 7/16	1.438	1.394	1.660	1.589	55/64	0.885	0.833	0.62	0.59	0.24	0.18	0.029
1	1.0000	1 5/8	1.625	1.575	1.876	1.796	63/64	1.012	0.956	0.72	0.69	0.30	0.24	0.031
1 1/8	1.1250	1 13/16	1.812	1.756	2.093	2.002	1 7/64	1.139	1.079	0.78	0.75	0.33	0.24	0.033
1 1/4	1.2500	2	2.000	1.938	2.309	2.209	1 7/32	1.251	1.187	0.86	0.83	0.40	0.31	0.035
1 3/8	1.3750	2 3/16	2.188	2.119	2.526	2.416	1 11/32	1.378	1.310	0.99	0.95	0.40	0.31	0.038
1 1/2	1.5000	2 3/8	2.375	2.300	2.742	2.622	1 15/32	1.505	1.433	1.05	1.01	0.46	0.37	0.041
1 3/4	1.7500	2 3/4	2.750	2.662	3.175	3.035	1 23/32	1.759	1.679	1.24	1.20	0.52	0.43	0.048
2	2.0000	3 1/8	3.125	3.025	3.608	3.449	1 31/32	2.013	1.925	1.43	1.38	0.52	0.43	0.055
2 1/4	2.2500	3 1/2	3.500	3.388	4.041	3.862	2 13/64	2.251	2.155	1.67	1.62	0.52	0.43	0.061
2 1/2	2.5000	3 7/8	3.875	3.750	4.474	4.275	2 29/64	2.505	2.401	1.79	1.74	0.64	0.55	0.068
2 3/4	2.7500	4 1/4	4.250	4.112	4.907	4.688	2 45/64	2.759	2.647	2.05	1.99	0.64	0.55	0.074
3	3.0000	4 5/8	4.625	4.475	5.340	5.102	2 61/64	3.013	2.893	2.23	2.17	0.71	0.62	0.081
3 1/4	3.2500	5	5.000	4.838	5.774	5.515	3 3/16	3.252	3.124	2.47	2.41	0.71	0.62	0.087
3 1/2	3.5000	5 3/8	5.375	5.200	6.207	5.928	3 7/16	3.506	3.370	2.72	2.65	0.71	0.62	0.094
3 3/4	3.7500	5 3/4	5.750	5.562	6.640	6.341	3 11/16	3.760	3.616	2.97	2.90	0.71	0.62	0.100
4	4.0000	6 1/8	6.125	5.925	7.073	6.755	3 15/16	4.014	3.862	3.22	3.15	0.71	0.62	0.107
See Notes		1			2					3		3		4

(For additional requirements refer to Notes on p. 26 and General Data on pp. 1 and 2.)

Copyright ASME International
Provided by IHS under license with ASME
No reproduction or networking permitted without license from IHS
Not for Resale

TABLE 10 (CONT'D)

GENERAL NOTES:

(a) Unification. Bold type indicates products unified dimensionally with British and Canadian standards. Unification of fine thread products is limited to sizes 1 in. and under.

(b) True Position of Tapped Hole. The axis of tapped hole shall be located at true position with respect to the axis of nut body within a tolerance zone having a diameter equivalent to 4% of the maximum width across flats for 1½ in. nominal size nuts or smaller, and 6% of the maximum width across flats for nuts larger than 1½ in., regardless of feature size.

(c) Countersink. Tapped hole shall be countersunk on the bearing face. The maximum countersink diameter shall be the thread basic (nominal) major diameter plus 0.030 in. for ⅜ in. nominal size nuts and smaller, and 1.08 times the basic major diameter for nuts larger than ⅜ in. No part of the threaded portion shall project beyond the bearing surface.

(d) Threads. Threads shall be unified coarse, fine, or 8 thread series (UNC, UNF or 8 UN series), Class 2B. Unless otherwise specified, coarse thread series shall be furnished.

(e) Material. Unless otherwise specified, chemical and mechanical properties of steel nuts shall conform with Grade A of ASTM A 563, Carbon and Alloy Steel Nuts; or Grade 2 of SAE J995, Mechanical and Material Requirements for Steel Nuts. Nuts of other materials such as corrosion resistant (stainless) steel, brass, bronze, and aluminum alloys shall have properties as agreed upon between the manufacturer and purchaser. The properties for nuts of several grades of corrosion resistant steel alloys are covered in ASTM F 594, and of several nonferrous materials in ASTM F 467.

NOTES:

(1) Width Across Flats. Maximum width across flats shall not be exceeded (see exception in General Data). No transverse section through the nut between 25% and 75% of the actual nut thickness as measured from the bearing surface shall be less than the minimum width across flats. For milled-from-bar nuts, see statement in General Data pertaining to the nominal bar size to be used.

(2) Corner Fill. A rounding or lack of fill at junction of hex corners with chamfer shall be permissible provided the width across corners is within specified limits at and beyond a distance equal to 17.5% of the basic thread diameter from the chamfered faces.

(3) Slots. Slots shall be normal to nut flats. Contour of bottom of slots shall be at manufacturer's option. Requirements for gaging slots are in Appendix I.

(4) Tops and Bearing Surfaces of Nuts. Nuts in sizes 7/16 in. nominal size and smaller shall be double chamfered. Larger size nuts shall be double chamfered or have washer faced bearing surface and chamfered top.

The diameter of chamfer circle on double chamfered nuts and diameter of washer face shall be within the limits of the maximum width across flats and 95% of the minimum width across flats.

The top of washer faced nuts shall be flat and the diameter of chamfer circle shall be equal to the maximum width across flats within a tolerance of −15%. The length of chamfer at hex corners shall be from 5% to 15% of the basic thread diameter. The surface of chamfer may be slightly convex or rounded.

Bearing surface shall be flat and perpendicular to the axis of the threaded hole within the FIM limits specified for the respective strength level.

Copyright ASME International
Provided by IHS under license with ASME
No reproduction or networking permitted without license from IHS Not for Resale

APPENDIX I
SLOT GAGES AND GAGING FOR SLOTTED NUTS

(This Appendix is not part of ASME/ANSI B18.2.2-1987, and is included for information purposes only.)

The gages specified below shall be used to determine the acceptability of the alignment and bottom contours of the slots in slotted nuts in accordance with the following procedure.

The gaging for slot alignment provides for equal variations in the location of the cotter pin hole in the bolt and the location of the slots in the nut.

To inspect the nut, the slotted end of the gage shall be inserted through the threaded hole from the bearing surface of the nut. The gage pin shall then be inserted into both the gage slot and the nut slots through three adjacent faces of the nut, consecutively. Slot alignment shall be considered satisfactory if the gage pin fits into the slots without interference at all three gaging positions. The bottom contour shall be acceptable if the gage pin contacts the bottom surfaces of opposite slots during the alignment gaging at all three positions.

Some deviations from the specified gage plug diameters D may be necessary to compensate for variations in the nut thread minor diameter due to differences in manufacturing practices.

To insure adequate service life, gages and gage pins shall be suitably hardened.

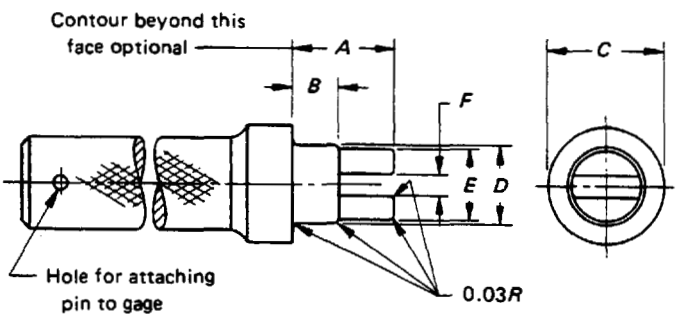

Gage

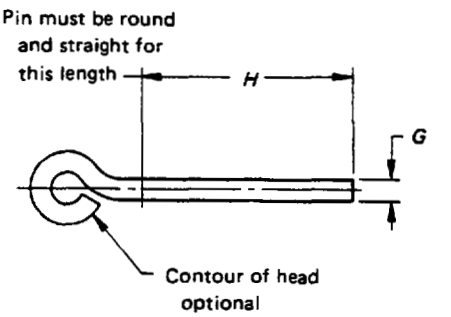

Gage Pin

DIMENSIONS OF SLOT GAGES AND GAGE PINS

Nominal Size or Basic Major Diam. of Thread		A	B	C	D [Note (1)]		E	F	G	H
		Gage Pilot Length	Gage Plug Length	Gage Face Diameter	Gage Plug Diameter		Gage Pilot Diameter	Gage Slot Width	Gage Pin Diameter	Gage Pin Length
					Coarse Thread	Fine Thread				
		Min.	Max.	Min.	+0.000 −0.001	+0.000 −0.001	±0.005	+0.002 −0.000	+0.000 −0.002	Min.
1/4	0.2500	0.288	0.110	0.375	0.196	0.211	0.181	0.065	0.065	1.00
5/16	0.3125	0.316	0.150	0.406	0.252	0.267	0.237	0.085	0.085	1.06
3/8	0.3750	0.415	0.180	0.500	0.307	0.330	0.292	0.115	0.115	1.19
7/16	0.4375	0.463	0.200	0.562	0.360	0.383	0.345	0.115	0.115	1.25

(Table continues on next page)

Copyright ASME International
Provided by IHS under license with ASME
No reproduction or networking permitted without license from IHS
Not for Resale

DIMENSIONS OF SLOT GAGES AND GAGE PINS (CONT'D)

Nominal Size or Basic Major Diam. of Thread		A	B	C	D [Note (1)]		E	F	G	H
		Gage Pilot Length	Gage Plug Length	Gage Face Diameter	Gage Plug Diameter		Gage Pilot Diameter	Gage Slot Width	Gage Pin Diameter	Gage Pin Length
					Coarse Thread	Fine Thread				
		Min.	Max.	Min.	+0.000 −0.001	+0.000 −0.001	±0.005	+0.002 −0.000	+0.000 −0.002	Min.
1/2	0.5000	0.573	0.260	0.625	0.417	0.446	0.402	0.145	0.145	1.38
9/16	0.5625	0.621	0.280	0.703	0.472	0.502	0.457	0.145	0.145	1.44
5/8	0.6250	0.731	0.310	0.781	0.527	0.565	0.512	0.175	0.175	1.56
3/4	0.7500	0.827	0.370	0.938	0.642	0.682	0.627	0.175	0.175	1.75
7/8	0.8750	0.922	0.480	1.109	0.755	0.798	0.740	0.175	0.175	1.94
1	1.0000	1.018	0.550	1.250	0.865	0.910	0.850	0.235	0.235	2.12
1 1/8	1.1250	1.176	0.600	1.406	0.970	1.035	0.955	0.235	0.235	2.31
1 1/4	1.2500	1.272	0.660	1.562	1.095	1.160	1.080	0.305	0.305	2.50
1 3/8	1.3750	1.399	0.770	1.718	1.195	1.285	1.180	0.305	0.305	2.69
1 1/2	1.5000	1.526	0.810	1.875	1.320	1.410	1.305	0.365	0.365	2.88
1 3/4	1.7500	1.759	1.190	2.188	1.534	...	1.519	0.425	0.425	3.25
2	2.0000	2.013	1.370	2.500	1.759	...	1.744	0.425	0.425	3.62
2 1/4	2.2500	2.251	1.610	2.818	2.009	...	1.994	0.425	0.425	4.00
2 1/2	2.5000	2.505	1.730	3.125	2.229	...	2.214	0.545	0.545	4.38
2 3/4	2.7500	2.759	1.980	3.438	2.479	...	2.464	0.545	0.545	4.75
3	3.0000	3.013	2.160	3.750	2.729	...	2.714	0.615	0.615	5.12
3 1/4	3.2500	3.252	2.400	4.062	2.979	...	2.964	0.615	0.615	5.50
3 1/2	3.5000	3.506	2.640	4.375	3.229	...	3.214	0.615	0.615	5.88
3 3/4	3.7500	3.760	2.890	4.688	3.479	...	3.464	0.615	0.615	6.25
4	4.0000	4.014	3.140	5.000	3.729	...	3.714	0.615	0.615	6.62

NOTE:
(1) Diameters tabulated are equivalent to the minimum minor diameters of Class 2B threads. If the nuts are not threaded with unified coarse (UNC) or fine (UNF) threads, the diameter of gage shall be the same as the diameter of the GO thread plug gage for the bore.

Copyright ASME International
Provided by IHS under license with ASME
No reproduction or networking permitted without license from IHS
Not for Resale

APPENDIX II
FORMULAS FOR NUT DIMENSIONS

(This Appendix is not part of ASME/ANSI B18.2.2-1987, and is included for information purposes only.)

(Table begins on following page.)

Copyright ASME International
Provided by IHS under license with ASME
No reproduction or networking permitted without license from IHS
Not for Resale

APPENDIX II

Nut Type	Nut Size [Note (1)]	Width Across Flats		Nut Thickness		Width Across Corners
		Basic	Tolerance (Minus)	Basic [Note (2)]	Tolerance (Plus or Minus)	Limits
Square	1/4 through 5/8	$F = 1.500D + 0.062$	$0.050D$	$H = 0.875D$	$0.016D + 0.012$	Max. $G = 1.4142$ (Max. F) Min. $G = 1.373$ (Min. F) $- 0.030$
	3/4 through 1 1/2	$F = 1.500D$	$0.050D$	$H = 0.875D$	$0.016D + 0.012$	
Hex Flat	1 1/8 through 1 1/2	$F = 1.500D$	$0.050D$	$H = 0.875D$	$0.016D + 0.012$	Max. $G = 1.1547$ (Max. F) Min. $G = 1.14$ (Min. F)
Hex Flat Jam	1 1/8	$F = 1.500D$	$0.050D$	$H = 0.500D + 0.062$	$0.016D + 0.012$	Max. $G = 1.1547$ (Max. F) Min. $G = 1.14$ (Min. F)
	1 1/4 through 1 1/2	$F = 1.500D$	$0.050D$	$H = 0.500D + 0.125$	$0.016D + 0.012$	
Hex and Hex Slotted	1/4	$F = 1.500D + 0.062$	$0.015D + 0.006$	$H = 0.875D$	$0.015D + 0.003$	Max. $G = 1.1547$ (Max. F) Min. $G = 1.14$ (Min. F)
	5/16 through 5/8	$F = 1.500D$	$0.015D + 0.006$	$H = 0.875D$	$0.015D + 0.003$	
	3/4 through 1 1/8	$F = 1.500D$	$0.050D$	$H = 0.875D - 0.016$	$0.016D + 0.012$	
	1 1/4 through 1 1/2	$F = 1.500D$	$0.050D$	$H = 0.875D - 0.031$	$0.016D + 0.012$	
Hex Jam	1/4	$F = 1.500D + 0.062$	$0.015D + 0.006$	$H =$ See Table	$0.015D + 0.003$	Max. $G = 1.1547$ (Max. F) Min. $G = 1.14$ (Min. F)
	5/16 through 5/8	$F = 1.500D$	$0.015D + 0.006$	$H =$ See Table	$0.015D + 0.003$	
	3/4 through 1 1/8	$F = 1.500D$	$0.050D$	$H = 0.500D + 0.047$	$0.016D + 0.012$	
	1 1/4 through 1 1/2	$F = 1.500D$	$0.050D$	$H = 0.500D + 0.094$	$0.016D + 0.012$	
Hex Thick and Hex Thick Slotted	1/4	$F = 1.500D + 0.062$	$0.015D + 0.006$	$H =$ See Table	$0.015D + 0.003$	Max. $G = 1.1547$ (Max. F) Min. $G = 1.14$ (Min. F)
	5/16 through 5/8	$F = 1.500D$	$0.015D + 0.006$	$H =$ See Table	$0.015D + 0.003$	
	3/4 through 1 1/2	$F = 1.500D$	$0.050D$	$H =$ See Table	$0.015D + 0.003$	
Heavy Square	1/4 through 1 1/2	$F = 1.500D + 0.125$	$0.050D$	$H = 1.000D$	$0.016D + 0.012$ [Note (3)]	Max. $G = 1.4142$ (Max. F) Min. $G = 1.373$ (Min. F) $- 0.030$
Heavy Hex Flat	1 1/8 through 4	$F = 1.500D + 0.125$	$0.050D$	$H = 1.000D$	$0.016D + 0.012$ [Note (3)]	Max. $G = 1.1547$ (Max. F) Min. $G = 1.14$ (Min. F)

STD·ASME B18·2·2-ENGL 1987 ■ 0759670 0619742 31T ■

Copyright ASME International
Provided by IHS under license with ASME
No reproduction or networking permitted without license from IHS
Not for Resale

Nut Type	Nut Size (Note (1))	Width Across Flats		Nut Thickness		Width Across Corners
		Basic	Tolerance (Minus)	Basic (Note (2))	Tolerance (Plus or Minus)	Limits
Heavy Hex Flat Jam	1/4 through 1 1/8	$F = 1.500D + 0.125$	$0.050D$	$H = 0.500D + 0.062$	$0.016D + 0.012$ (Note (4))	Max. $G = 1.1547$ (Max. F) Min. $G = 1.14$ (Min. F)
	1 1/4 through 2 1/4	$F = 1.500D + 0.125$	$0.050D$	$H = 0.500D + 0.125$	$0.016D + 0.012$ (Note (4))	
	2 1/2 through 4	$F = 1.500D + 0.125$	$0.050D$	$H = 0.500D + 0.250$	$0.016D + 0.012$ (Note (4))	
Heavy Hex and Heavy Hex Slotted	1/4 through 1 1/8	$F = 1.500D + 0.125$	$0.050D$	$H = 1.000D - 0.016$	$0.016D + 0.012$	Max. $G = 1.1547$ (Max. F) Min. $G = 1.14$ (Min. F)
	1 1/4 through 2	$F = 1.500D + 0.125$	$0.050D$	$H = 1.000D - 0.031$	$0.016D + 0.012$	
	2 1/4 through 3	$F = 1.500D + 0.125$	$0.050D$	$H = 1.000D - 0.047$	$0.016D + 0.012$	
	3 1/4 through 4	$F = 1.500D + 0.125$	$0.050D$	$H = 1.000D - 0.062$	$0.016D + 0.012$	
Heavy Hex Jam	1/4 through 1 1/8	$F = 1.500D + 0.125$	$0.050D$	$H = 0.500D + 0.047$	$0.016D + 0.012$	Max. $G = 1.1547$ (Max. F) Min. $G = 1.14$ (Min. F)
	1 1/4 through 2	$F = 1.500D + 0.125$	$0.050D$	$H = 0.500D + 0.094$	$0.016D + 0.012$	
	2 1/4	$F = 1.500D + 0.125$	$0.050D$	$H = 0.500D + 0.078$	$0.016D + 0.012$	
	2 1/2 through 3	$F = 1.500D + 0.125$	$0.050D$	$H = 0.500D + 0.203$	$0.016D + 0.012$	
	3 1/4 through 4	$F = 1.500D + 0.125$	$0.050D$	$H = 0.500D + 0.188$	$0.016D + 0.012$	

NOTES:
(1) Adjusted to sixteenths.
(2) 1/4 through 1 in. sizes adjusted to sixty-fourths. 1 1/8 through 2 1/2 in. sizes adjusted upward to thirty-seconds. 2 3/4 through 4 in. sizes adjusted upward to sixteenths.
(3) Plus tolerance only. Minus tolerance adjusted so that minimum thickness is equal to minimum thickness of heavy hex nut.
(4) Plus tolerance only. Minus tolerance adjusted so that minimum thickness is equal to minimum thickness of heavy hex jam nut, where
D = nominal nut size or basic diameter of the thread
F = width across flats
G = width across corners

Copyright ASME International
Provided by IHS under license with ASME
No reproduction or networking permitted without license from IHS
Not for Resale

APPENDIX III
WRENCH OPENINGS APPLICABLE TO SQUARE AND HEX NUTS

(This Appendix is not part of ASME/ANSI B18.2.2-1987, and is included for information purposes only.)

Nominal Size of Wrench [Note (1)], Also Basic (Maximum) Width Across Flats of Nuts		Allowance Between Nut Flats and Jaws of Wrench [Note (2)]	Wrench Openings			Square Nut	Hex Flat, Hex Flat Jam, Hex, Hex Jam, Hex Slotted, Hex Thick, Hex Thick Slotted	Heavy Square, Heavy Hex Flat, Heavy Hex Flat Jam, Heavy Hex, Heavy Hex Jam, Heavy Hex Slotted
			Min.	Tol. [Note (2)]	Max.	Nominal Nut Sizes		
7/16	0.4375	0.003	0.440	0.006	0.446	1/4	1/4	...
1/2	0.5000	0.004	0.504	0.006	0.510	...	5/16	1/4
9/16	0.5625	0.004	0.566	0.007	0.573	5/16	3/8	5/16
5/8	0.6250	0.004	0.629	0.007	0.636	3/8	...	...
11/16	0.6875	0.004	0.692	0.007	0.699	...	7/16	3/8
3/4	0.7500	0.005	0.755	0.008	0.763	7/16	1/2	7/16
13/16	0.8125	0.005	0.818	0.008	0.826	1/2	...	...
7/8	0.8750	0.005	0.880	0.008	0.888	...	9/16	1/2
15/16	0.9375	0.006	0.944	0.009	0.953	...	5/8	9/16
1	1.0000	0.006	1.006	0.009	1.015	5/8	...	...
1 1/16	1.0625	0.006	1.068	0.009	1.077	...	...	5/8
1 1/8	1.1250	0.007	1.132	0.010	1.142	3/4	3/4	...
1 1/4	1.2500	0.007	1.257	0.010	1.267	...	...	3/4
1 5/16	1.3125	0.008	1.320	0.011	1.331	7/8	7/8	...
1 7/16	1.4375	0.008	1.446	0.011	1.457	...	...	7/8
1 1/2	1.5000	0.008	1.508	0.012	1.520	1	1	...
1 5/8	1.6250	0.009	1.634	0.012	1.646	...	...	1
1 11/16	1.6875	0.009	1.696	0.012	1.708	1 1/8	1 1/8	...
1 13/16	1.8125	0.010	1.822	0.013	1.835	...	...	1 1/8
1 7/8	1.8750	0.010	1.885	0.013	1.898	1 1/4	1 1/4	...
2	2.0000	0.011	2.011	0.014	2.025	...	...	1 1/4
2 1/16	2.0625	0.011	2.074	0.014	2.088	1 3/8	1 3/8	...
2 3/16	2.1875	0.012	2.200	0.015	2.215	...	...	1 3/8
2 1/4	2.2500	0.012	2.262	0.015	2.277	1 1/2	1 1/2	...
2 3/8	2.3750	0.013	2.388	0.016	2.404	...	...	1 1/2
2 9/16	2.5625	0.014	2.576	0.017	2.593	...	...	1 5/8
2 3/4	2.7500	0.014	2.766	0.017	2.783	...	...	1 3/4
2 15/16	2.9375	0.016	2.954	0.019	2.973	...	...	1 7/8

(Table continues on next page)

Copyright ASME International
Provided by IHS under license with ASME
No reproduction or networking permitted without license from IHS
Not for Resale

Previous page is blank.

WRENCH OPENINGS APPLICABLE TO SQUARE AND HEX NUTS (CONT'D)

Nominal Size of Wrench [Note (1)], Also Basic (Maximum) Width Across Flats of Nuts		Allowance Between Nut Flats and Jaws of Wrench [Note (2)]	Wrench Openings			Square Nut	Hex Flat, Hex Flat Jam, Hex, Hex Jam, Hex Slotted, Hex Thick, Hex Thick Slotted	Heavy Square, Heavy Hex Flat, Heavy Hex Flat Jam, Heavy Hex, Heavy Hex Jam, Heavy Hex Slotted
			Min.	Tol. [Note (2)]	Max.	Nominal Nut Sizes		
3 1/8	3.1250	0.017	3.142	0.020	3.162	...	...	2
3 1/2	3.5000	0.019	3.518	0.022	3.540	...	...	2 1/4
3 7/8	3.8750	0.020	3.895	0.023	3.918	...	...	2 1/2
4 1/4	4.2500	0.022	4.272	0.025	4.297	...	...	2 3/4
4 5/8	4.6250	0.024	4.649	0.027	4.676	...	...	3
5	5.0000	0.026	5.026	0.029	5.055	...	...	3 1/4
5 3/8	5.3750	0.028	5.403	0.031	5.434	...	...	3 1/2
5 3/4	5.7500	0.030	5.780	0.033	5.813	...	...	3 3/4
6 1/8	6.1250	0.032	6.157	0.035	6.192	...	...	4

NOTES:

(1) Wrenches are normally marked with the "Nominal Size of Wrench" which corresponds to the basic (maximum, in most cases) width across flats dimension of the respective nut. For specific requirements applicable to wrenches, refer to the appropriate ANSI B107 document which covers the particular wrench type.

(2) Allowance (minimum clearance) between maximum width across flats of the nut and jaws of wrench equals $(0.005W + 0.001)$. Tolerance on wrench opening equals plus $(0.005W + 0.004$ from minimum),
where
W = nominal size of wrench

Copyright ASME International
Provided by IHS under license with ASME
No reproduction or networking permitted without license from IHS
Not for Resale

AMERICAN NATIONAL STANDARDS FOR BOLTS, NUTS, RIVETS, SCREWS, WASHERS, AND SIMILAR FASTENERS

Small Solid Rivets B18.1.1-1972 (R1983)
Large Rivets B18.1.2-1972 (R1983)
Metric Small Solid Rivets B18.1.3M-1983
Square and Hex Bolts and Screws — Inch Series B18.2.1-1981
Square and Hex Nuts (Inch Series) B18.2.2-1987
Metric Hex Cap Screws B18.2.3.1M-1979
Metric Formed Hex Screws B18.2.3.2M-1979
Metric Heavy Hex Screws B18.2.3.3M-1979
Metric Hex Flange Screws B18.2.3.4M-1984
Metric Hex Bolts B18.2.3.5M-1979
Metric Heavy Hex Bolts B18.2.3.6M-1979
Metric Heavy Hex Structural Bolts B18.2.3.7M-1979
Metric Hex Lag Screws B18.2.3.8M-1981
Metric Heavy Hex Flange Screws B18.2.3.9M-1984
Metric Hex Nuts, Style 1 . . . . . B18.2.4.1M-1979
Metric Hex Nuts, Style 2 . . . . . B18.2.4.2M-1979
Metric Slotted Hex Nuts B18.2.4.3M-1979
Metric Hex Flange Nuts B18.2.4.4M-1982
Metric Hex Jam Nuts B18.2.4.5M-1979
Metric Heavy Hex Nuts B18.2.4.6M-1979
Socket Cap, Shoulder and Set Screws (Inch Series) B18.3-1986
Socket Head Cap Screws (Metric Series) B18.3.1M-1986
Metric Series Hexagon Keys and Bits B18.3.2M-1979 (R1986)
Hexagon Socket Head Shoulder Screws (Metric Series) B18.3.3M-1986
Hexagon Socket Button Head Cap Screws (Metric Series) B18.3.4M-1986
Hexagon Socket Flat Countersunk Head Cap Screws (Metric Series) B18.3.5M-1986
Metric Series Socket Set Screws B18.3.6M-1986
Round Head Bolts (Inch Series) B18.5-1978
Metric Round Head Short Square Neck Bolts B18.5.2.1M-1981
Metric Round Head Square Neck Bolts B18.5.2.2M-1982
Wood Screws B18.6.1-1981
Slotted Head Cap Screws, Square Head Set Screws, and Slotted Headless Set Screws B18.6.2-1972 (R1983)
Machine Screws and Machine Screw Nuts B18.6.3-1972 (R1983)
Thread Forming and Thread Cutting Tapping Screws and Metallic Drive Screws (Inch Series) B18.6.4-1981
Metric Thread Forming and Thread Cutting Tapping Screws B18.6.5M-1986
Metric Machine Screws B18.6.7M-1985
General Purpose Semi-Tubular Rivets, Full Tubular Rivets, Split Rivets and Rivet Caps B18.7-1972 (R1980)
Metric General Purpose Semi-Tubular Rivets B18.7.1M-1984
Clevis Pins and Cotter Pins B18.8.1-1972 (R1983)
Taper Pins, Dowel Pins, Straight Pins, Grooved Pins, and Spring Pins (Inch Series) B18.8.2-1978 (R1983)
Plow Bolts B18.9-1958 (R1977)
Track Bolts and Nuts B18.10-1982
Miniature Screws B18.11-1961 (R1983)
Glossary of Terms for Mechanical Fasteners B18.12-1962 (R1981)
Screw and Washer Assemblies — Sems B18.13-1965 (R1983)
Forged Eyebolts B18.15-1985
Mechanical and Performance Requirements for Prevailing-Torque Type Steel Metric Hex Nuts and Hex Flange Nuts B18.16.1M-1979 (R1986)
Torque-Tension Test Requirements for Prevailing-Torque Type Steel Metric Hex Nuts and Hex Flange Nuts B18.16.2M-1979 (R1986)
Dimensional Requirements for Prevailing-Torque Type Steel Metric Hex Nuts and Hex Flange Nuts B18.16.3M-1982
Wing Nuts, Thumb Screws, and Wing Screws B18.17-1968 (R1983)
Inspection and Quality Assurance for General Purpose Fasteners B18.18.1M-1987
Inspection and Quality Assurance for High-Volume Machine Assembly Fasteners B18.18.2M-1987
Inspection and Quality Assurance for Special Purpose Fasteners B18.18.3M-1987
Inspection and Quality Assurance for Fasteners for Highly Specialized Engineered Applications B18.18.4M-1987
Lock Washers B18.21.1-1972 (R1983)
Metric Plain Washers B18.22M-1981
Plain Washers B18.22.1-1965 (R1981)
Beveled Washers B18.23.1-1967 (R1975)



Copyright ASME International
Provided by IHS under license with ASME
No reproduction or networking permitted without license from IHS

Not for Resale