ASME B18.2.1-1996

[Revision of ANSI B18.2.1-1981 (R1992)]

# SQUARE AND HEX BOLTS AND SCREWS (INCH SERIES)

AN AMERICAN NATIONAL STANDARD

The American Society of Mechanical Engineers

Copyright ASME International
Provided by IHS under license with ASME
No reproduction or networking permitted without license from IHS

Not for Resale

# Erratum
# to
# ASME B18.2.1-1996
# Square and Hex Bolts and Screws (Inch Series)

On page 13, Table 4, the fourteenth entry under "Basic" in Column *H* is revised. Revision appears on the overleaf.

THE AMERICAN SOCIETY OF MECHANICAL ENGINEERS
Three Park Avenue, New York, NY 10016-5990

July 2003

M4496E

Copyright ASME International
Provided by IHS under license with ASME
No reproduction or networking permitted without license from IHS

Not for Resale

Copyright ASME International
Provided by IHS under license with ASME
No reproduction or networking permitted without license from IHS
Not for Resale

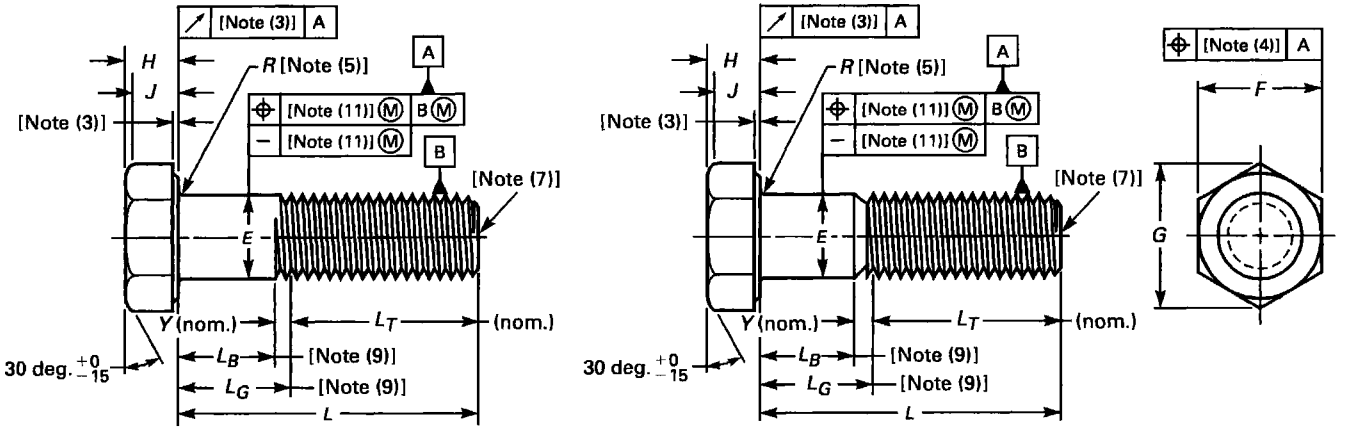


Cut Thread Rolled Thread

## TABLE 4 DIMENSIONS OF HEX CAP SCREWS

| Nominal Size or Basic Product Diameter [Note (15)] | | E | | F | | | G | | H | | | J | $L_T$ | | Y | Circular Runout of Bearing Surface FIM [Note (3)] |
|---|---|---|---|---|---|---|---|---|---|---|---|---|---|---|---|---|
| | | Body Diameter [Note (6)] | | Width Across Flats | | | Width Across Corners [Note (2)] | | Head Height | | | Wrenching Height [Note (2)] | Thread Length for Screw Lengths [Note (9)] | | Transition Thread Length [Notes (9), (10)] | |
| | | | | | | | | | | | | | 6 in. and Shorter | Over 6 in. | | |
| | | Max. | Min. | Basic | Max. | Min. | Max. | Min. | Basic | Max. | Min. | Min. | Nom. | Nom. | Max. | Max. |
| 1/4 | 0.2500 | 0.2500 | 0.2450 | 7/16 | 0.438 | 0.428 | 0.505 | 0.488 | 5/32 | 0.163 | 0.150 | 0.106 | 0.750 | 1.000 | 0.250 | 0.010 |
| 5/16 | 0.3125 | 0.3125 | 0.3065 | 1/2 | 0.500 | 0.489 | 0.577 | 0.557 | 13/64 | 0.211 | 0.195 | 0.140 | 0.875 | 1.125 | 0.278 | 0.011 |
| 3/8 | 0.3750 | 0.3750 | 0.3690 | 9/16 | 0.562 | 0.551 | 0.650 | 0.628 | 15/64 | 0.243 | 0.226 | 0.160 | 1.000 | 1.250 | 0.312 | 0.012 |
| 7/16 | 0.4375 | 0.4375 | 0.4305 | 5/8 | 0.625 | 0.612 | 0.722 | 0.698 | 9/32 | 0.291 | 0.272 | 0.195 | 1.125 | 1.375 | 0.357 | 0.013 |
| 1/2 | 0.5000 | 0.5000 | 0.4930 | 3/4 | 0.750 | 0.736 | 0.866 | 0.840 | 5/16 | 0.323 | 0.302 | 0.215 | 1.250 | 1.500 | 0.385 | 0.014 |
| 9/16 | 0.5625 | 0.5625 | 0.5545 | 13/16 | 0.812 | 0.798 | 0.938 | 0.910 | 23/64 | 0.371 | 0.348 | 0.250 | 1.375 | 1.625 | 0.417 | 0.015 |
| 5/8 | 0.6250 | 0.6250 | 0.6170 | 15/16 | 0.938 | 0.922 | 1.083 | 1.051 | 25/64 | 0.403 | 0.378 | 0.269 | 1.500 | 1.750 | 0.455 | 0.017 |
| 3/4 | 0.7500 | 0.7500 | 0.7410 | 1 1/8 | 1.125 | 1.100 | 1.299 | 1.254 | 15/32 | 0.483 | 0.455 | 0.324 | 1.750 | 2.000 | 0.500 | 0.020 |
| 7/8 | 0.8750 | 0.8750 | 0.8660 | 1 5/16 | 1.312 | 1.285 | 1.516 | 1.465 | 35/64 | 0.563 | 0.531 | 0.378 | 2.000 | 2.250 | 0.556 | 0.023 |
| 1 | 1.0000 | 1.0000 | 0.9900 | 1 1/2 | 1.500 | 1.469 | 1.732 | 1.675 | 39/64 | 0.627 | 0.591 | 0.416 | 2.250 | 2.500 | 0.625 | 0.026 |
| 1 1/8 | 1.1250 | 1.1250 | 1.1140 | 1 11/16 | 1.688 | 1.631 | 1.949 | 1.859 | 11/16 | 0.718 | 0.658 | 0.461 | 2.500 | 2.750 | 0.714 | 0.029 |
| 1 1/4 | 1.2500 | 1.2500 | 1.2390 | 1 7/8 | 1.875 | 1.812 | 2.165 | 2.066 | 25/32 | 0.813 | 0.749 | 0.530 | 2.750 | 3.000 | 0.714 | 0.033 |
| 1 3/8 | 1.3750 | 1.3750 | 1.3630 | 2 1/16 | 2.062 | 1.994 | 2.382 | 2.273 | 27/32 | 0.878 | 0.810 | 0.569 | 3.000 | 3.250 | 0.833 | 0.036 |
| 1 1/2 | 1.5000 | 1.5000 | 1.4880 | 2 1/4 | 2.250 | 2.175 | 2.598 | 2.480 | 15/16 | 0.974 | 0.902 | 0.640 | 3.250 | 3.500 | 0.833 | 0.039 |
| 1 3/4 | 1.7500 | 1.7500 | 1.7380 | 2 5/8 | 2.625 | 2.538 | 3.031 | 2.893 | 1 3/32 | 1.134 | 1.054 | 0.748 | 3.750 | 4.000 | 1.000 | 0.046 |
| 2 | 2.0000 | 2.0000 | 1.9880 | 3 | 3.000 | 2.900 | 3.464 | 3.306 | 1 7/32 | 1.263 | 1.175 | 0.825 | 4.250 | 4.500 | 1.111 | 0.052 |
| 2 1/4 | 2.2500 | 2.2500 | 2.2380 | 3 3/8 | 3.375 | 3.262 | 3.897 | 3.719 | 1 3/8 | 1.423 | 1.327 | 0.933 | ... | 5.000 | 1.111 | 0.059 |
| 2 1/2 | 2.5000 | 2.5000 | 2.4880 | 3 3/4 | 3.750 | 3.625 | 4.330 | 4.133 | 1 17/32 | 1.583 | 1.479 | 1.042 | ... | 5.500 | 1.250 | 0.065 |
| 2 3/4 | 2.7500 | 2.7500 | 2.7380 | 4 1/8 | 4.125 | 3.988 | 4.763 | 4.546 | 1 11/16 | 1.744 | 1.632 | 1.151 | ... | 6.000 | 1.250 | 0.072 |
| 3 | 3.0000 | 3.0000 | 2.9880 | 4 1/2 | 4.500 | 4.350 | 5.196 | 4.959 | 1 7/8 | 1.935 | 1.815 | 1.290 | ... | 6.500 | 1.250 | 0.079 |

AN AMERICAN NATIONAL STANDARD

# ASME B18.2.1a-1999

# ADDENDA

to

## ASME B18.2.1-1996
## SQUARE AND HEX BOLTS AND SCREWS (INCH SERIES)

THE AMERICAN SOCIETY OF MECHANICAL ENGINEERS
Three Park Avenue • New York, NY 10016

Copyright ASME International
Provided by IHS under license with ASME
No reproduction or networking permitted without license from IHS
Not for Resale

Date of Issuance: October 8, 1999

ASME is the registered trademark of The American Society of Mechanical Engineers.

This code or standard was developed under procedures accredited as meeting the criteria for American National Standards. The Standards Committee that approved the code or standard was balanced to assure that individuals from competent and concerned interests have had an opportunity to participate. The proposed code or standard was made available for public review and comment that provides an opportunity for additional public input from industry, academia, regulatory agencies, and the public-at-large.

ASME does not "approve," "rate," or "endorse" any item, construction, proprietary device, or activity.

ASME does not take any position with respect to the validity of any patent rights asserted in connection with any items mentioned in this document, and does not undertake to insure anyone utilizing a standard against liability for infringement of any applicable Letters Patent, nor assumes any such liability. Users of a code or standard are expressly advised that determination of the validity of any such patent rights, and the risk of infringement of such rights, is entirely their own responsibility.

Participation by federal agency representative(s) or person(s) affiliated with industry is not to be interpreted as government or industry endorsement of this code or standard.

ASME accepts responsibility for only those interpretations issued in accordance with governing ASME procedures and policies which precludes the issuance of interpretations by individual volunteers.

No part of this document may be reproduced in any form,
in an electronic retrieval system or otherwise,
without the prior written permission of the publisher.

The American Society of Mechanical Engineers
Three Park Avenue, New York, NY 10016

Copyright © 1999 by
THE AMERICAN SOCIETY OF MECHANICAL ENGINEERS
All Rights Reserved
Printed in U.S.A.

Copyright ASME International
Provided by IHS under license with ASME
No reproduction or networking permitted without license from IHS

Not for Resale



The American Society of Mechanical Engineers

AN AMERICAN NATIONAL STANDARD

# SQUARE AND HEX BOLTS AND SCREWS (INCH SERIES)

## ASME B18.2.1-1996

[Revision of ANSI B18.2.1-1981 (R1992)]

Copyright ASME International
Provided by IHS under license with ASME
No reproduction or networking permitted without license from IHS
Not for Resale

Date of Issuance: July 29, 1997

The 1996 edition of this Standard is being issued with an automatic addenda subscription service. The use of an addenda allows revisions made in response to public review comments or committee actions to be published as necessary. The next edition of this Standard is scheduled for publication in 1999.

ASME is the registered trademark of The American Society of Mechanical Engineers.

This code or standard was developed under procedures accredited as meeting the criteria for American National Standards. The Consensus Committee that approved the code or standard was balanced to assure that individuals from competent and concerned interests have had an opportunity to participate. The proposed code or standard was made available for public review and comment which provides an opportunity for additional public input from industry, academia, regulatory agencies, and the public-at-large.

ASME does not "approve," "rate," or "endorse" any item, construction, proprietary device, or activity.

ASME does not take any position with respect to the validity of any patent rights asserted in connection with any items mentioned in this document, and does not undertake to insure anyone utilizing a standard against liability for infringement of any applicable Letters Patent, nor assume any such liability. Users of a code or standard are expressly advised that the determination of the validity of any such patent rights, and the risk of infringement of such rights, is entirely their own responsibility.

Participation by federal agency representative(s) or person(s) affiliated with industry is not to be interpreted as government or industry endorsement of this code or standard.

ASME accepts responsibility for only those interpretations issued in accordance with governing ASME procedures and policies which preclude the issuance of interpretations by individual volunteers.

No part of this document may be reproduced in any form,
in an electronic retrieval system or otherwise,
without the prior written permission of the publisher.

The American Society of Mechanical Engineers
345 East 47th Street, New York, NY 10017

Copyright © 1997 by
THE AMERICAN SOCIETY OF MECHANICAL ENGINEERS
All Rights Reserved
Printed in U.S.A.

Copyright ASME International
Provided by IHS under license with ASME
No reproduction or networking permitted without license from IHS

Not for Resale

# ASME B18.2.1a-1999

Following approval by the ASME B18 Committee and ASME, and after public review, ASME B18.2.1a-1999 was approved by the American National Standards Institute on April 9, 1999.

Addenda to the 1996 edition of ASME B18.2.1 are issued in the form of replacement pages. Revisions, additions, and deletions are incorporated directly into the affected pages. It is advisable, however, that this page, the Addenda title and copyright pages, and all replaced pages be retained for reference.

## SUMMARY OF CHANGES

This is the first Addenda to be published to ASME B18.2.1-1996.

Replace or insert the pages listed. Changes given below are identified on the pages by a margin note, **(a)**, placed next to the affected area. The pages not listed are the reverse sides of the listed pages and contain no changes.

| *Page* | *Location* | *Change* |
|---|---|---|
| vi.1 | Correspondence With B18 Committee | Added |
| ix | Contents | Updated to reflect Addenda |
| 10 | Table 3 | In fifth column, second entry corrected by errata to read $1\frac{1}{16}$ |
| 16–18 | Table 4, Note (5) | Four equations deleted by errata |
| | Fig. 2 | Four equations added by errata |
| | Table 4, Note (11) | Revised |
| 23, 24 | Fig. 5 | Four equations added by errata |
| | Table 6, Note (7) | Four equations deleted by errata |
| | Table 6, Note (11) | Revised |
| 33 | Appendix I | Deleted |
| 35 | Appendix II | Revised in its entirety |

Copyright ASME International
Provided by IHS under license with ASME
No reproduction or networking permitted without license from IHS
Not for Resale

This page intentionally left blank.

--`,,```,,,,````-`-`,,`,,`,`,,`---

Copyright ASME International
Provided by IHS under license with ASME
No reproduction or networking permitted without license from IHS

Not for Resale

# FOREWORD

(This Foreword is not part of ASME B18.2.1-1996.)

American National Standards Committee B18 for the standardization of bolts, screws, nuts, rivets, and similar fasteners was organized in March 1922, as Sectional Committee B18, under the aegis of the American Engineering Standards Committee (later the American Standards Association, then the United States of America Standards Institute and, as of October 6, 1969, the American National Standards Institute, Inc.), with the Society of Automotive Engineers and the American Society of Mechanical Engineers as joint sponsors. Subcommittee 2 was subsequently established and charged with the responsibility for technical content of standards covering wrench head bolts and nuts.

Subcommittee 2, after appraisal of the requirements of industry, developed a proposed standard series of bolt head and nut dimensions. This proposal was finally approved and designated a Tentative American Standard in February 1927.

A first revision of the document was designated as an American Standard in March 1933, and was followed by a second revision which was granted approval as an American Standard in January 1941.

Following reorganization of the B18 Committee in 1947, Subcommittee 2 was asked to expand the standard on head proportions into a complete product standard. A proposal covering square and hexagon head bolts, and nuts, hexagon head cap screws, and automotive hexagon head bolts was prepared and submitted to the B18 Committee in April 1950. While this draft was under consideration, the B18 Committee received a proposal from the British Standards Institution for unification of dimensions on products incorporating Unified screw threads. The Committee welcomed the opportunity of discussing the proposals and an American-British-Canadian Conference was held in New York, June 1–2, 1950.

It was agreed in the Conference that the essentials of unification could be accomplished by selection of mutually satisfactory across-the-flats dimensions, since this would permit the use of the same wrenches and because other features would rarely affect interchangeability. After due consideration, suitable existing across-the-flats dimensions were selected for the hexagon products affected.

In its meeting of October 13, 1950, Subcommittee 2 agreed to incorporate in the proposed standard the conference recommendations on 1/4 in. hexagon head bolts, 5/8 in. hexagon head cap screws and automotive hexagon head bolts, 5/16 and 3/8 in. regular hexagon and square nuts, and 7/16 in. light and regular hexagon and square nuts. At a subsequent meeting of Subcommittee 2, further changes were adopted in order to combine the light and regular series of nuts and to combine the automotive hexagon head bolt, hexagon head cap screw, and regular hexagon head close tolerance bolt.

In view of the progress made in the United States and the urgency of standardization for mutual defense, the British Standards Institution sponsored a second Conference in London in April 1951, to complete the unification of certain hexagon bolts and nuts.

At a meeting on June 8, 1951, Subcommittee 2 reaffirmed its acceptance of the unified dimensions, which corresponded with those in the March 1951 draft, but attempted to select bet-



Copyright ASME International
Provided by IHS under license with ASME
No reproduction or networking permitted without license from IHS
Not for Resale

ter nomenclature for the unified products. A final draft incorporating the nomenclature *Finished Hexagon Bolts and Nuts* and containing numerous editorial changes was submitted for letter ballot in September 1951. Following approval by the B18 Committee and the sponsors, the proposal was presented to the American Standards Association for approval and designation as an American Standard. This was granted on March 24, 1952.

Recognizing the standard was in need of additional refinements, Subcommittee 2 began immediately to revise it, removing inconsistencies with respect to fillets, improving the length tolerances on heavy hexagon bolts, and incorporating numerous other corrections and clarifications. The most noteworthy editorial change was a decision to combine the coverage for hexagon cap screws and square head set screws from the B18.2 standard with the coverage for slotted head cap screws and slotted headless set screws from the B18.6 standard and publish them in a separate document. The requirements for the unified hexagon cap screws and finished hexagon bolts being identical in the overlapping sizes, this data would now be available in two publications. Following approvals by the B18 Committee and sponsor organizations, the proposal was submitted to the American Standards Association and declared an American Standard on February 2, 1955.

A revision of this document comprised of numerous editorial corrections and inclusion of an appendix for grade markings was duly approved and designated an American Standard on April 18, 1960.

At a meeting in February 1960, Subcommittee 2 approved a recommendation to reduce the head heights for heavy, heavy semi-finished, and heavy finished hexagon bolts which was subsequently approved by letter ballot of the B18 Committee on August 16, 1960. A proposed standard for heavy hexagon structural bolts submitted and accepted by Subcommittee 2 at its October 17, 1960 meeting was approved by letter ballot of the B18 Committee on May 9, 1961. To meet the urgent needs of the steel construction industry, it was considered necessary to publish the standard for the structural bolts immediately. Consequently, Appendix IV to ASA B18.2-1960 containing coverage for the revised heavy hexagon bolts and the new heavy hexagon structural bolts was released in 1962.

In October of 1961, Subcommittee 2 appointed a subgroup to review all product standards for square and hexagon bolts, screws, and nuts, and to recommend simplifications which would be compatible with technical, production, and distribution advances that had occurred over the prior several years. The subgroup presented its recommendations at a meeting of Subcommittee 2 in October of 1962. It was agreed that the internally and externally threaded products should be published in separate documents as suggested, and draft proposals for each were completed.

The proposed revision for square and hex bolts and screws incorporated the following subgroup recommendations: consolidation of hexagon head cap screws and finished hexagon bolts into a single product; consolidation of heavy semifinished hexagon bolts and heavy finished hexagon bolts into a single product; elimination of regular semifinished hexagon bolts; a new length tolerancing pattern for all bolts and screws; documentation of a positive identification procedure for determining whether an externally threaded product should properly be designated a bolt or a screw; and an abbreviated and purified set of product nomenclature reflecting application of the identification procedure. Letter ballot of this proposal to the B18 Committee in March, 1964 resulted in several comments which were resolved to the satisfaction of the Committee in June of 1964. Following acceptance by the sponsor organizations, the revision was submitted to the American Standards Association and was designated American Standard ASA B18.2.1 on September 8, 1965.

Subcommittee 2 continued to further develop refinements initiated by the simplification subgroup and revisions reflecting changes in manufacturing practices and consumer requirements. This work culminated in Subcommittee acceptance of a 1970 proposal incorporating, in addition to numerous editorial changes, revisions in the following significant areas: addition of coverage for askew head bolts and hex head lag screws; addition of straightness requirements to applicable products; addition of minimum fillet to square and hex bolts and lag screws; appli-



Copyright ASME International
Provided by IHS under license with ASME
No reproduction or networking permitted without license from IHS
Not for Resale

cation of UNR threads and new concepts for controlling thread length on products having Unified threads; and clarification of grade markings, thread runout gages and formulas for dimensions. Also included were refinements to hex cap screw and heavy hex screw requirements consisting of addition of wrenching height and revision of underhead fillets, washer face thicknesses and controls on angularity of bearing face. The proposed revision, after approval by letter ballot of the B18 Committee in March, 1970 was subsequently approved by the sponsors and submitted to the American National Standards Institute for designation as an American National Standard. This was granted on January 18, 1972.

Numerous user complaints on interference of the elliptical fillet added in the 1972 revision resulted in appointment of a subcommittee to study the problem. They recommended reverting back to the max./min. radius fillet specified in the 1965 version with the elliptical fillet retained for use when specified by the user. Further refinements in the definition of the fillet for short length screws were added to Hex Cap and Heavy Hex Screws. Geometric tolerancing was updated to conform to American National Standard Y14.5, Dimensioning and Tolerancing. The transition length of the hex cap screw was changed to equal 5 coarse (UNC) threads. Few, if any, users accepted the 1972 values that were designed to reduce tooling by providing the same body length for adjacent lengths. On screws, separate straightness requirements have been deleted and the combination thread runout and straightness gage described in Appendix I is specified. Straightness as a variable based on length has been applied to bolts with gaging described in Appendix II. Acceptability of screw threads based on gaging systems established by American National Standard B1.3-1979 has been added to each type of screw or bolt, except lag screws. This proposal was approved by letter ballot of the Subcommittee and B18 in January, 1980. Following acceptance by the secretariat organizations, the revision was referred to the American National Standards Institute and granted recognition as an American National Standard on June 24, 1981.

In 1991 it was recognized that B18.2.1 required extensive revision to better meet the needs of conformance with Public Law 101-592. Included in these considerations were improved definition of a full body versus a reduced body and those dimensions which should be certified to assure product fit, form, and function. Other dimensions given for each product would only be examined in the event of a dispute. Also, the term "finished hex bolt," which is today's cap screw, should be dropped. Additionally, a weight table has been included to assist users.

Additionally, it was felt that the heavy hex structural bolt, heavy hex nut, hardened steel washers and compressible washer-type direct tension indicators should be included in a new standard for fasteners intended for use in structural applications. For this reason the heavy hex structural bolt was removed from this Standard. The new table for maximum grip gaging lengths and minimum body lengths for cap screws and heavy hex screws is included for the first time to assist users and is similar to the pattern used for metric bolts and screws.

ASME B18.2.1-1996 was approved by the American National Standards Institute (ANSI) on December 4, 1996.



Copyright ASME International
Provided by IHS under license with ASME
No reproduction or networking permitted without license from IHS
Not for Resale

# CORRESPONDENCE WITH B18 COMMITTEE (a)

*General.* ASME Standards are developed and maintained with the intent to represent the consensus of concerned interests. As such, users of this Standard may interact with the Committee by requesting interpretations, proposing revisions, and attending Committee meetings. Correspondence should be addressed to:

Secretary, B18 Main Committee
The American Society of Mechanical Engineers
Three Park Avenue
New York, NY 10016-5990

*Proposing Revisions.* Revisions are made periodically to the Standard to incorporate changes that appear necessary or desirable, as demonstrated by the experience gained from the application of the Standard. Approved revisions will be published periodically.

The Committee welcomes proposals for revisions to this Standard. Such proposals should be as specific as possible, citing the paragraph number(s), the proposed wording, and a detailed description of the reasons for the proposal, including any pertinent documentation.

*Interpretations.* Upon request, the B18 Committee will render an interpretation of any requirement of the Standard. Interpretations can only be rendered in response to a written request sent to the Secretary of the B18 Main Committee.

The request for interpretation should be clear and unambiguous. It is further recommended that the inquirer submit his/her request in the following format:

Subject: Cite the applicable paragraph number(s) and the topic of the inquiry.

Edition: Cite the applicable edition of the Standard for which the interpretation is being requested.

Question: Phrase the question as a request for an interpretation of a specific requirement suitable for general understanding and use, not as a request for an approval of a proprietary design or situation. The inquirer may also include any plans or drawings which are necessary to explain the question; however, they should not contain proprietary names or information.

Requests that are not in this format will be rewritten in this format by the Committee prior to being answered, which may inadvertently change the intent of the original request.

ASME procedures provide for reconsideration of any interpretation when or if additional information that might affect an interpretation is available. Further, persons aggrieved by an interpretation may appeal to the cognizant ASME Committee or Subcommittee. ASME does not "approve," "certify," "rate," or "endorse" any item, construction, proprietary device, or activity.

*Attending Committee Meetings.* The B18 Main Committee regularly holds meetings, which are open to the public. Persons wishing to attend any meeting should contact the Secretary of the B18 Main Committee.



Copyright ASME International
Provided by IHS under license with ASME
No reproduction or networking permitted without license from IHS
Not for Resale

# ASME STANDARDS COMMITTEE B18
# Standardization of Bolts, Nuts, Rivets, Screws, Washers, and Similar Fasteners

(The following is the roster of the Committee at the time of approval of this Standard.)

## OFFICERS

**K. E. McCullough,** *Chair*
**D. A. Clever,** *Vice Chair*
**E. Schwartz,** *Vice Chair*
**B. Biddinger,** *Secretary*

## COMMITTEE PERSONNEL

**J. C. Akins,** Safety Socket Screw Co.
**J. B. Belford,** Lawson Products, Inc.
**B. Biddinger,** The American Society of Mechanical Engineers
**D. Broomfield,** Illinois Tool Works, Inc.
**J. A. Buda,** SPS Technologies, Inc.
**R. M. Byrne,** Trade Association Management, Inc.
**D. A. Cleaver,** Deere & Co.
**A. P. Cockman,** Ford Motor Co.
**T. Collier,** CAM-TECH Industries, Inc.
**A. C. DiCola,** Wrought Washer Manufacturing, Inc.
**B. A. Dusina,** Federal Screw Works
**G. A. Gobb,** Consultant
**R. J. Harrington,** Spirol International Corp.
**A. Herskovitz,** U.S. Army
**A. C. Hood,** ACH Technologies
**F. W. Kern,** Society of Automotive Engineers
**W. H. Kopke,** ITW Shakeproof Industrial Products
**P. D. Korsmo,** Consultant
**J. G. Langenstein,** Consultant
**M. Levinson,** ITW Shakeproof Industrial Products
**J. B. Levy,** Consultant
**A. D. McCrindle,** Stelco Fasteners, Ltd.
**K. E. McCullough,** Consultant
**D. J. Miley,** Caterpillar, Inc.
**M. D. Prasad,** General Motors Corp.
**W. Schevey,** BGM Fastener Co., Inc.
**E. Schwartz,** Consultant
**R. M. Serabin,** Bowman Distribution
**R. D. Strong,** General Motors Corp.
**J. F. Sullivan,** National Fasteners Distribution Association
**R. L. Tennis,** Caterpillar, Inc.
**S. W. Vass,** Lake Erie Screw Corp.
**R. G. Weber,** Fairfield University
**C. J. Wilson,** Industrial Fasteners Institute
**R. B. Wright,** Wright Tool Co.
**J. G. Zeratsky,** National Rivet & Manufacturing Co.



Copyright ASME International
Provided by IHS under license with ASME
No reproduction or networking permitted without license from IHS
Not for Resale

## MEMBERS OF SUBCOMMITTEE 2 — EXTERNAL DRIVE FASTENERS

**D. A. Clever,** *Chair,* Deere & Co.
**C. J. Wilson,** *Secretary,* Industrial Fasteners Institute
**R. M. Byrne,** Trade Association Management, Inc.
**A. P. Cockman,** Ford Motor Co.
**R. J. Corbett,** Huck International Industrial Fasteners
**A. Dinh,** Defense Industrial Supply Center
**B. A. Dusina,** Federal Screw Works
**J. Greenslade,** Greenslade & Co.
**A. Herskovitz,** U.S. Army
**A. D. McCrindle,** Stelco Fasteners Ltd.
**K. E. McCullough,** Consultant
**D. J. Miley,** Caterpillar, Inc.
**M. D. Prasad,** General Motors Corp.
**R. D. Strong,** General Motors Corp.
**R. L. Tennis,** Caterpillar, Inc.
**S. W. Vass,** Lake Erie Screw Corp.



Copyright ASME International
Provided by IHS under license with ASME
No reproduction or networking permitted without license from IHS
Not for Resale

# CONTENTS

(a)


Foreword ..... iii
Correspondence With B18 Committee ..... vi.1
Standards Committee Roster ..... vii

**1 Introductory Notes** ..... 1
**2 General Data** ..... 2

**Figures**

1 Underhead Fillet for Long Screws ..... 16
2 Underhead Fillet for Short Screws Threaded Full Length ..... 17
3 $L_G$, Maximum and $L_B$, Minimum for Short Screws Threaded Full Length ..... 17
4 Underhead Fillet for Long Screws ..... 23
5 Underhead Fillet for Short Screws Threaded Full Length ..... 23

**Tables**

1 Dimensions of Square Bolts ..... 4
2 Dimensions of Hex Bolts ..... 7
3 Dimensions of Heavy Hex Bolts ..... 10
4 Dimensions of Hex Cap Screws ..... 13
4A Dimensions of Underhead Fillets ..... 14
4B $L_G$, Maximum and $L_B$, Minimum Limitations for Short Screws Threaded Full Length ..... 15
5 Maximum Grip Gaging Lengths, $L_G$, and Minimum Body Lengths, $L_B$, for Hex Cap Screws and Heavy Hex Screws Nominal Size ..... 19
6 Dimensions of Heavy Hex Screws ..... 20
6A Dimensions of Underhead Fillets ..... 21
6B $L_G$, Maximum and $L_B$, Minimum Limitations for Short Screws Threaded Full Length ..... 22
7 Dimensions of Askew Head Bolts ..... 26
8 Dimensions of Square Lag Screws ..... 28
9 Dimensions of Hex Lag Screws ..... 29
9A Dimensions of Lag Screw Threads ..... 30
10 Length Tolerances for Square and Hex Bolts and Screws ..... 32

**Appendices**

II Straightness Gage and Gaging ..... 35
A Formulas for Bolt and Screw Head Dimensions ..... 37
B Specifications for Identification of Bolts and Screws ..... 39
C Weight in Pounds of 100 Hex Cap Screws for Given Diameter/Length Combination ..... 41
D Countersunk Center Holes ..... 43
E Government Standard Items and Part Identifying Numbering System (PIN Code) for Screw, Cap, Hexagon Head ..... 45




Copyright ASME International
Provided by IHS under license with ASME
No reproduction or networking permitted without license from IHS
Not for Resale

# SQUARE AND HEX BOLTS AND SCREWS (INCH SERIES)

## 1 INTRODUCTORY NOTES

### 1.1 Scope

**1.1.1** This Standard covers the complete general and dimensional data for eight product types of inch series square and hex bolts and screws recognized as American National Standard. Also included are appendixes covering thread runout sleeve gages, gaging procedure for checking bolt and screw straightness, grade markings for steel bolts and screws, formulas on which dimensional data are based, and a specification to assist in identifying a product as being a screw or a bolt. It should be understood, however, that where questions arise concerning acceptance of product, the dimensions in the tables shall govern over recalculation by formula. Heavy hex structural bolts, formerly covered in ANSI B18.2.1, are now covered in ASME B18.2.6.

**1.1.2** The inclusion of dimensional data in this Standard is not intended to imply that all of the products described herein are stock production sizes. Consumers should consult with manufacturers concerning lists of stock production sizes.

**1.1.3** Square and Hex Bolts and Screws purchased for Government use shall conform to this Standard and to any additional requirements specified in the purchase order or contract. See Appendix E for the Government Part Identifying Numbering System (PIN code) and other requirements for hexagon head cap screws.

### 1.2 Dimensions

All dimensions in this Standard are in inches, unless otherwise stated, and apply to unplated or uncoated product. When plating or coating is specified, the finished product dimensions shall be as agreed upon between supplier and purchaser.

Symbols specifying geometric characteristics are in accord with ASME Y14.5M, Dimensioning and Tolerancing.

### 1.3 Options

Options, where specified, shall be at the discretion of the manufacturer unless otherwise agreed upon by the manufacturer and the purchaser.

### 1.4 Terminology

As used in this Standard, the term "long bolt" or "long screw" means a bolt or screw of a diameter-length combination which is not threaded for full length, and the term "short bolt" or "short screw" means a bolt or screw of a diameter-length combination which is required to be threaded for full length.

*body length ($L_B$)*: the distance measured parallel to the axis of the bolt or screw from the underhead bearing surface to the last scratch of thread or, for rolled threads, to the top of the extrusion angle. Where specified, the minimum body length ($L_B$, min.) is a criterion for inspection.

*grip gaging length ($L_G$)*: the distance measured parallel to the axis of the bolt or screw from the underhead bearing surface to the face of a noncounterbored, noncountersunk standard GO thread ring gage assembled by hand as far as the thread will permit. The maximum grip gaging length ($L_G$, max.) is a criterion for inspection.

*point length*: the length from the pointed end to the first fully formed thread at major diameter as determined by the distance that the point enters into a cylindrical NOT GO major diameter ring gage (ref. Gage 3.1, ASME B1.2).

*thread length*: the length from the extreme point of the bolt or screw to the last complete (full form) thread. For bolts and screws in this Standard, other than lag screws, the nominal thread length ($L_T$) is a reference dimension intended for calculation purposes only.

*transition thread length (Y)*: the length which includes the length of incomplete threads, the extrusion angle on rolled threads, and tolerances on grip length. Where specified, maximum transition thread length ($Y$, max.) is a reference dimension intended for calculation purposes only.



Copyright ASME International
Provided by IHS under license with ASME
No reproduction or networking permitted without license from IHS
Not for Resale

For definitions of other terms relating to fasteners or component features thereof used in this Standard refer to American National Standard Glossary of Terms for Mechanical Fasteners, ANSI B18.12.

### 1.5 Referenced Standards

Unless otherwise specified, the referenced standard shall be the most recent issue at the time of order placement.

Copies of referenced ASME standards may be obtained from the American Society of Mechanical Engineers, 22 Law Drive, P.O. Box 2300, Fairfield, NJ 07007-2300.

Copies of referenced ASTM standards may be obtained from the American Society for Testing and Materials, 100 Barr Harbor Drive, West Conshohocken, PA 19428-2959.

Copies of referenced SAE standards may be obtained from the Society of Automotive Engineers, Inc., 400 Commonwealth Drive, Warrendale, PA 15096-0001.

## 2 GENERAL DATA

### 2.1 Heads

**2.1.1 Width Across Flats.** The width across flats of head shall be the overall distance measured perpendicular to the axis of product between two opposite sides of the head in accordance with the notes in respective dimensional tables.

**2.1.2 Head Height.** The head height shall be the overall distance measured parallel to the axis of product from the top of the head to the bearing surface and shall include the thickness of the washer face where provided.

### 2.2 Bolt or Screw Length

The bolt or screw length shall be the distance measured parallel to the axis of product from the bearing surface of the head to the extreme end of the bolt or screw, including point if the product is pointed.

### 2.3 Threads

Threads on all products except lag screws shall be Unified Standard Class 2A of the series specified in the notes on respective dimensional tables as documented in American National Standard, Unified Inch Screw Threads (UN and UNR Thread Form), ASME B1.1. Unless otherwise specified, size limits for standard external thread Class 2A apply prior to coating. The external thread allowance may thus be used to accommodate the coating thickness on coated parts, provided that the maximum coating thickness is no more than one-fourth of the allowance. Thus, the thread after coating is subject to acceptance using a basic Class 3A size GO thread gage and a Class 2A thread gage for either minimum material or NOT GO. Where external thread has no allowance, or allowance must be maintained after coating, and for standard internal threads, sufficient allowance must be provided prior to coating to assure that finished product threads do not exceed the maximum-material limits specified. For thread Class 3A, Class 2A allowances in accordance with ASME B1.1 should be applied whenever possible.

**2.3.1 Thread Gaging.** Unless otherwise specified by the purchaser, dimensional acceptability of screw threads shall be determined based on System 21, ASME B1.3M, Screw Thread Gaging Systems for Dimensional Acceptability—Inch and Metric Screw Threads (UN, UNR, UNJ, M, and MJ).

### 2.4 Body Diameter

The body diameter minimum/maximum limits of each of the eight products included in this Standard are defined in each of the respective applicable tables. Unless otherwise specified by the purchaser, the body style supplied shall be full-size body.

### 2.5 Finish

Unless otherwise specified, bolts and screws shall be supplied with a plain (as processed) finish, unplated, or uncoated.

### 2.6 Workmanship

Bolts and screws shall be visually, without magnification, free from burrs, seams, laps, loose scale, irregular surfaces, and any defects affecting their serviceability.

When control of surface discontinuities is required, the purchaser shall specify conformance to ASTM F 788/F 788M, Specification for Surface Discontinuities of Bolts, Screws, and Studs, Inch and Metric Series.

### 2.7 Designation

Bolts and screws shall be designated by the following data in the sequence shown: product name, nominal size (fractional or decimal equivalent); threads per inch (omit for lag screws); product length (fractional or two-place



Copyright ASME International
Provided by IHS under license with ASME
No reproduction or networking permitted without license from IHS Not for Resale

decimal equivalent); material, including specification where necessary; and protective finish, if required. See the following examples:

EXAMPLE:
Square Bolt, $\frac{3}{8}$-16 × 1$\frac{1}{2}$, Steel, Zinc Plated
Hex Cap Screw, $\frac{1}{2}$-13 × 4, ASTM A 354 Grade BD
Hex Lag Screw, 0.75 × 5.00, Steel

## 2.8 Identification Symbols

**2.8.1 Grade Symbols.** Each of the eight products included in this Standard shall be marked in accordance with the applicable specification for its material, mechanical, or performance requirements.

**2.8.2 Source Symbols.** Each of the eight products included in this Standard shall be marked in accordance with the applicable specifications for its material, mechanical, or performance requirements to identify its source (manufacturer or private label distributor).

## 2.9 Quality Assurance

Unless otherwise specified, products shall be furnished in accordance with ASME B18.18.1M and ASME B18.18.2M, as noted in para. 2.10.

## 2.10 Dimensional Characteristics

Products shall conform to the dimensions indicated in the respective tables. Unless otherwise specified, the following provisions shall apply for inspection of dimensional characteristics. The designated characteristics defined within the notes of each product table shall be inspected in accordance with ASME B18.18.2M. For nondesignated characteristics, the provisions of ASME B18.18.1M shall apply. Should a nondesignated dimension be determined to have a variance, it shall be deemed conforming to this Standard if the user, who is the installer, accepts the variance based on fit, form, and function considerations. Where verifiable in-process inspection is used in accordance with ASME B18.18.3M or ASME B18.18.4M, the final inspection level sample sizes of those respective standards shall apply.

## 2.11 Pointed Products

Unless otherwise specified, bolts need not be pointed. The presence of a point is to reduce the possibility of damage to the leading threads and promote assembleability with a tapped hole or nut. See respective table notes for point requirements.

## 2.12 Countersunk Center Holes

For parts which require machining, it may be necessary to provide support with a countersunk center hole. When agreement is established between manufacturer and purchaser, the drill size and depth shall be in accordance with Appendix D unless otherwise specified.



Copyright ASME International
Provided by IHS under license with ASME
No reproduction or networking permitted without license from IHS
Not for Resale

Copyright ASME International
Provided by IHS under license with ASME
No reproduction or networking permitted without license from IHS



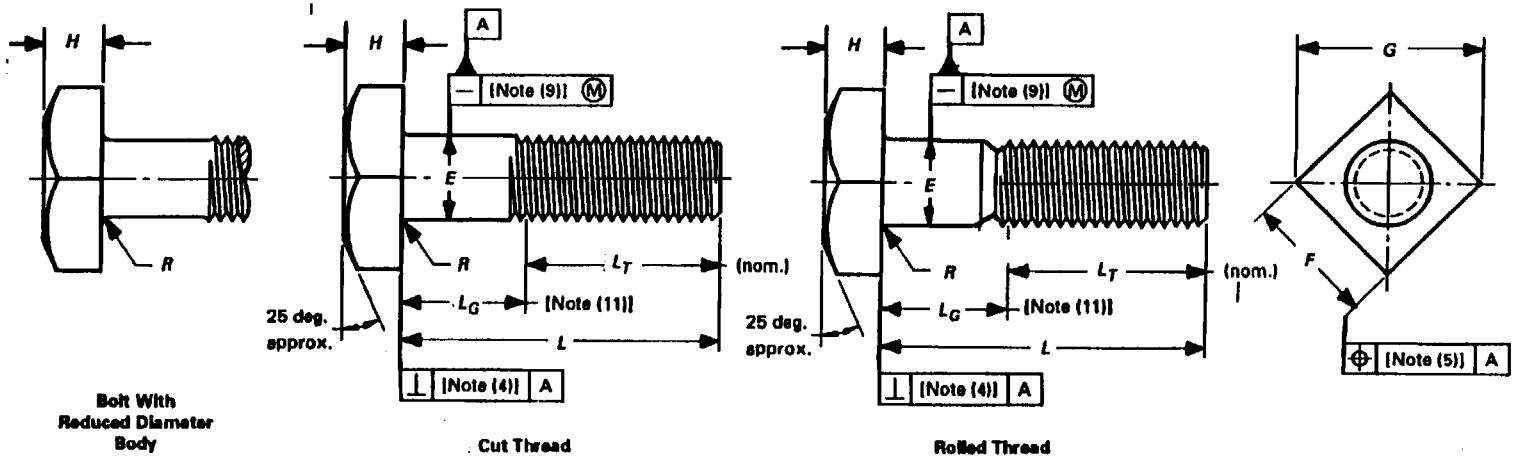


## TABLE 1 DIMENSIONS OF SQUARE BOLTS

| Nominal Size or Base Product Diameter [Note (16)] | | E | | F | | | G | | H | | | R | | $L_T$ | |
|---|---|---|---|---|---|---|---|---|---|---|---|---|---|---|---|
| | | Full Size Body Diameter [Notes (6), (7)] | | Width Across Flats [Note (3)] | | | Width Across Corners [Note (3)] | | Head Height | | | Radius of Fillet | | Thread Length for Bolt Lengths [Note (11)] | |
| | | | | | | | | | | | | | | 6 in. and Shorter | Over 6 in. |
| | | Max. | Min. | Basic | Max. | Min. | Max. | Min. | Basic | Max. | Min. | Max. | Min. | Nom. | Nom. |
| 1/4 | 0.2500 | 0.260 | 0.237 | 3/8 | 0.375 | 0.362 | 0.530 | 0.498 | 11/64 | 0.188 | 0.156 | 0.03 | 0.01 | 0.750 | 1.000 |
| 5/16 | 0.3125 | 0.324 | 0.298 | 1/2 | 0.500 | 0.484 | 0.707 | 0.665 | 13/64 | 0.220 | 0.186 | 0.03 | 0.01 | 0.875 | 1.125 |
| 3/8 | 0.3750 | 0.388 | 0.360 | 9/16 | 0.562 | 0.544 | 0.795 | 0.747 | 1/4 | 0.268 | 0.232 | 0.03 | 0.01 | 1.000 | 1.250 |
| 7/16 | 0.4375 | 0.452 | 0.421 | 5/8 | 0.625 | 0.603 | 0.884 | 0.828 | 19/64 | 0.316 | 0.278 | 0.03 | 0.01 | 1.125 | 1.375 |
| 1/2 | 0.5000 | 0.515 | 0.482 | 3/4 | 0.750 | 0.725 | 1.061 | 0.995 | 21/64 | 0.348 | 0.308 | 0.03 | 0.01 | 1.250 | 1.500 |
| 5/8 | 0.6250 | 0.642 | 0.605 | 15/16 | 0.938 | 0.906 | 1.326 | 1.244 | 27/64 | 0.444 | 0.400 | 0.06 | 0.02 | 1.500 | 1.750 |
| 3/4 | 0.7500 | 0.768 | 0.729 | 1 1/8 | 1.125 | 1.088 | 1.591 | 1.494 | 1/2 | 0.524 | 0.476 | 0.06 | 0.02 | 1.750 | 2.000 |
| 7/8 | 0.8750 | 0.895 | 0.852 | 1 5/16 | 1.312 | 1.269 | 1.856 | 1.742 | 19/32 | 0.620 | 0.568 | 0.06 | 0.02 | 2.000 | 2.250 |
| 1 | 1.0000 | 1.022 | 0.976 | 1 1/2 | 1.500 | 1.450 | 2.121 | 1.991 | 21/32 | 0.684 | 0.628 | 0.09 | 0.03 | 2.250 | 2.500 |
| 1 1/8 | 1.1250 | 1.149 | 1.098 | 1 11/16 | 1.688 | 1.631 | 2.386 | 2.239 | 3/4 | 0.780 | 0.720 | 0.09 | 0.03 | 2.500 | 2.750 |
| 1 1/4 | 1.2500 | 1.277 | 1.223 | 1 7/8 | 1.875 | 1.812 | 2.652 | 2.489 | 27/32 | 0.876 | 0.812 | 0.09 | 0.03 | 2.750 | 3.000 |
| 1 3/8 | 1.3750 | 1.404 | 1.345 | 2 1/16 | 2.062 | 1.994 | 2.917 | 2.738 | 29/32 | 0.940 | 0.872 | 0.09 | 0.03 | 3.000 | 3.250 |
| 1 1/2 | 1.5000 | 1.531 | 1.470 | 2 1/4 | 2.250 | 2.175 | 3.182 | 2.986 | 1 | 1.036 | 0.964 | 0.09 | 0.03 | 3.250 | 3.500 |



Not for Resale

**Notes to Table 1:**

(1) **Surface Condition.** Bolts need not be finished on any surface except threads.

(2) **Top of Head.** Top of head shall be full form and chamfered with the diameter of chamfer circle being equal to the maximum width across flats, within a tolerance of minus 15%.

(3) **Head Taper.** Maximum width across flats and across corners shall not be exceeded. No transverse section through the head between 25% and 75% of actual head height, as measured from the bearing surface, shall be less than the minimum width across flats and across corners.

(4) **Bearing Surface.** A die seam across the bearing surface is permissible. Bearing surface shall be perpendicular to the axis of the body within a tolerance of 3 deg. for 1 in. size and smaller, and 2 deg. for sizes larger than 1 in. Angularity measurement shall be taken at a location to avoid interference from a die seam. Special bearing surface finishes may be provided as agreed between purchaser and manufacturer.

(5) **True Position of Head.** The axis of the head shall be located at true position with respect to the axis of the body (determined over a distance under the head equal to one diameter) within a tolerance zone having a diameter equivalent to 6% of the maximum width across flats, regardless of feature size.

(6) **Body Diameter.** Any swell or fin under the head or any die seam on the body shall not exceed the basic bolt diameter by the following:

0.030 in. for sizes up to ½ in.
0.050 in. for sizes ⅝ and ¾ in.
0.060 in. for sizes over ¾ in. to 1¼ in.
0.090 in. for sizes over 1¼ in. to 1½ in.

The diameter of the unthreaded length on bolts which are threaded for full length shall not be less than the minimum pitch diameter of the thread nor greater than the maximum body diameter, $E$, max., specified in Table 1.

(7) **Reduced Diameter Body.** Bolts may be obtained in reduced diameter body style. These shall have a body diameter of not less than the minimum pitch diameter of the thread and not exceeding the minimum body diameter, $E$, min., shown in Table 1. Any swell or fin under the head or any die seam on the body shall not exceed, $E$, min., by the following:

0.030 in. for sizes up to ½ in.
0.050 in. for sizes ⅝ and ¾ in.
0.060 in. for sizes over ¾ in. to 1¼ in.
0.090 in. for sizes over 1¼ in. to 1½ in.

(8) **Point.** Unless otherwise specified, bolts need not be pointed.

(9) **Straightness.** Shanks of bolts shall be straight within the following limits at MMC. For bolts with nominal lengths up to and including 12 in., the maximum camber shall be 0.006 in. per inch (0.006$L$) of bolt length. For bolts with nominal lengths over 12 in. up to and including 24 in., the maximum camber shall be 0.008 in. per inch (0.008$L$) of bolt length. A typical gage and gaging procedure for checking bolt straightness is given in Appendix II.

(10) **Length Tolerances.** Bolt length tolerances are given in Table 10. Tolerances for nonpointed products shall apply.

(11) **Thread Length.** The length of thread on bolts shall be controlled by the grip gaging length, $L_G$, max.

The maximum grip gaging length, as calculated and rounded to two decimal places for any bolt not threaded full length, shall be equal to the nominal bolt length minus the nominal thread length ($L_G$, *max.* $= L$, nom. $- L_T$). For bolts which are threaded full length, $L_G$, max. defines the unthreaded length under the head and shall not exceed the length of 2.5 times the thread pitch for sizes up to and including 1 in., and 3.5 times the thread pitch for sizes larger than 1 in. It shall be used as the criterion for inspection.

All bolts of nominal lengths equal to or shorter than the nominal thread length, $L_T$, plus a length equivalent to 2.5 times the thread pitch for sizes up to and including 1 in., and 3.5 times the thread pitch for sizes larger than 1 in. shall be threaded for full length.

Nominal thread length, $L_T$, is a reference dimension intended for calculation purposes only. Nominal thread length equals twice the basic thread diameter plus 0.25 in. for nominal bolt lengths up to and including 6 in., and twice the basic thread diameter plus 0.50 in. for nominal lengths over 6 in.

(12) **Incomplete Thread Diameter.** The major diameter of incomplete thread shall not exceed the actual major diameter of the full form thread.

(13) **Threads.** Threads, when rolled, shall be Unified Inch coarse, fine, or 8 thread series (UNRC, UNRF, or 8 UNR Series), Class 2A. Threads produced by other methods may be Unified Inch coarse, fine, or 8 thread series (UNC, UNF, or 8 UN Series), Class 2A. Acceptability of screw threads shall be determined based on System 21, ASME B1.3M, Screw Thread Gaging Systems for Dimensional Acceptability—Inch and Metric Screw Threads (UN, UNR, UNJ, M, and MJ).

(14) **Identification Symbols.** Identification marking symbols on bolt heads shall be raised or indented at the manufacturer's option unless otherwise specified. The marking shall be in accordance with the requirements of para. 2.8. Markings shall be legible to the unaided eye with the exception of corrective lenses. When raised, the



Copyright ASME International
Provided by IHS under license with ASME
No reproduction or networking permitted without license from IHS
Not for Resale

height of the marking may not exceed 0.015 in. over the specified maximum head height for bolts 5/8 in. and smaller. For bolts larger than 5/8 in., the marking may not project more than 0.030 in. over the specified maximum head height. When indented, the depth of the marking shall not reduce the load-carrying capability of the fastener.

(15) **Material.** Unless otherwise specified, chemical and mechanical properties of steel bolts shall conform to ASTM A 307, Grade A. Other materials and grades shall be as agreed upon by manufacturer and purchaser.

(16) **Nominal Size.** Where specifying nominal size in decimals, zeros preceding the decimal and in the fourth decimal place shall be omitted.

(17) **Dimensional Conformance.** Unless otherwise specified, square bolts shall have the following characteristics inspected to ASME B18.18.2M to the inspection levels shown:

| Characteristic | Inspection Level |
|---|---|
| Threads | C |
| Width across corners | C |
| Head height | C |
| Grip length | C |
| Visual | C |

If verifiable in-process inspection is used, see para. 2.10.

(18) **Additional Requirements.** For additional requirements, see Section 1, Introductory Notes, and Section 2, General Data.



Copyright ASME International
Provided by IHS under license with ASME
No reproduction or networking permitted without license from IHS
Not for Resale

Copyright ASME International
Provided by IHS under license with ASME
No reproduction or networking permitted without license from IHS



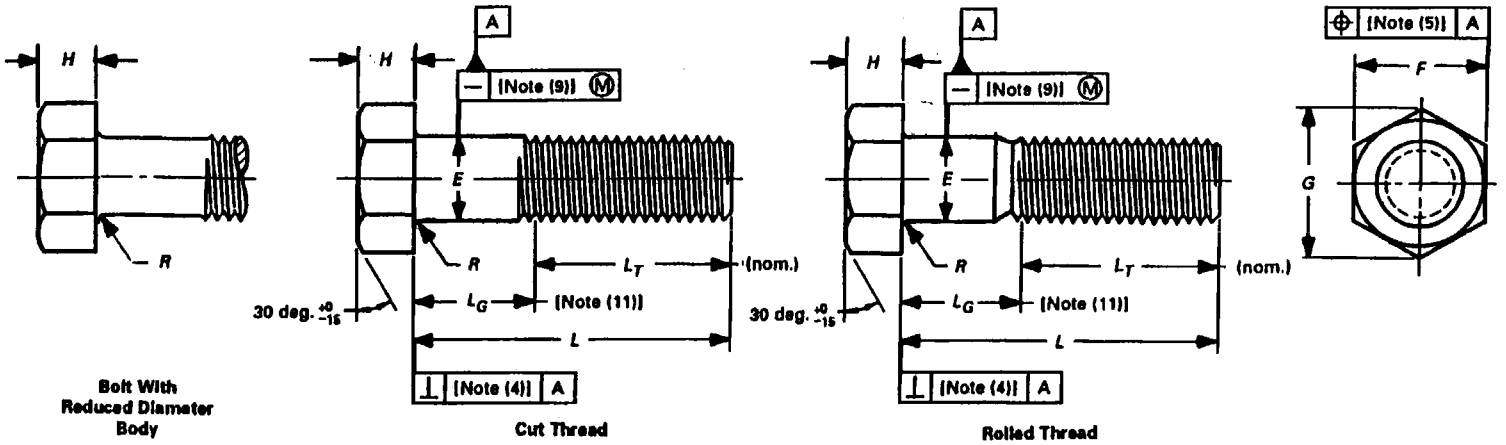


## TABLE 2 DIMENSIONS OF HEX BOLTS

| Nominal Size or Basic Product Diameter [Note (16)] | | E | | F | | | G | | H | | | R | | $L_T$ | |
|---|---|---|---|---|---|---|---|---|---|---|---|---|---|---|---|
| | | Full Size Body Diameter [Notes (6), (7)] | | Width Across Flats [Note (3)] | | | Width Across Corners [Note (3)] | | Head Height | | | Radius of Fillet | | Thread Length for Bolt Lengths [Note (11)] | |
| | | | | | | | | | | | | | | 6 in. and Shorter | Over 6 in. |
| | | Max. | Min. | Basic | Max. | Min. | Max. | Min. | Basic | Max. | Min. | Max. | Min. | Nom. | Nom. |
| 1/4 | 0.2500 | 0.260 | 0.237 | 7/16 | 0.438 | 0.425 | 0.505 | 0.484 | 11/64 | 0.188 | 0.150 | 0.03 | 0.01 | 0.750 | 1.000 |
| 5/16 | 0.3125 | 0.324 | 0.298 | 1/2 | 0.500 | 0.484 | 0.577 | 0.552 | 7/32 | 0.235 | 0.195 | 0.03 | 0.01 | 0.875 | 1.125 |
| 3/8 | 0.3750 | 0.388 | 0.360 | 9/16 | 0.562 | 0.544 | 0.650 | 0.620 | 1/4 | 0.268 | 0.226 | 0.03 | 0.01 | 1.000 | 1.250 |
| 7/16 | 0.4375 | 0.452 | 0.421 | 5/8 | 0.625 | 0.603 | 0.722 | 0.687 | 19/64 | 0.316 | 0.272 | 0.03 | 0.01 | 1.125 | 1.375 |
| 1/2 | 0.5000 | 0.515 | 0.482 | 3/4 | 0.750 | 0.725 | 0.866 | 0.826 | 11/32 | 0.364 | 0.302 | 0.03 | 0.01 | 1.250 | 1.500 |
| 5/8 | 0.6250 | 0.642 | 0.605 | 15/16 | 0.938 | 0.906 | 1.083 | 1.033 | 27/64 | 0.444 | 0.378 | 0.06 | 0.02 | 1.500 | 1.750 |
| 3/4 | 0.7500 | 0.768 | 0.729 | 1 1/8 | 1.125 | 1.088 | 1.299 | 1.240 | 1/2 | 0.524 | 0.455 | 0.06 | 0.02 | 1.750 | 2.000 |
| 7/8 | 0.8750 | 0.895 | 0.852 | 1 5/16 | 1.312 | 1.269 | 1.516 | 1.447 | 37/64 | 0.604 | 0.531 | 0.06 | 0.02 | 2.000 | 2.250 |
| 1 | 1.0000 | 1.022 | 0.976 | 1 1/2 | 1.500 | 1.450 | 1.732 | 1.653 | 43/64 | 0.700 | 0.591 | 0.09 | 0.03 | 2.250 | 2.500 |
| 1 1/8 | 1.1250 | 1.149 | 1.098 | 1 11/16 | 1.688 | 1.631 | 1.949 | 1.859 | 3/4 | 0.780 | 0.658 | 0.09 | 0.03 | 2.500 | 2.750 |
| 1 1/4 | 1.2500 | 1.277 | 1.223 | 1 7/8 | 1.875 | 1.812 | 2.165 | 2.066 | 27/32 | 0.876 | 0.749 | 0.09 | 0.03 | 2.750 | 3.000 |
| 1 3/8 | 1.3750 | 1.404 | 1.345 | 2 1/16 | 2.062 | 1.994 | 2.382 | 2.273 | 29/32 | 0.940 | 0.810 | 0.09 | 0.03 | 3.000 | 3.250 |
| 1 1/2 | 1.5000 | 1.531 | 1.470 | 2 1/4 | 2.250 | 2.175 | 2.598 | 2.480 | 1 | 1.036 | 0.902 | 0.09 | 0.03 | 3.250 | 3.500 |
| 1 3/4 | 1.7500 | 1.785 | 1.716 | 2 5/8 | 2.625 | 2.538 | 3.031 | 2.893 | 1 5/32 | 1.196 | 1.054 | 0.12 | 0.04 | 3.750 | 4.000 |
| 2 | 2.0000 | 2.039 | 1.964 | 3 | 3.000 | 2.900 | 3.464 | 3.306 | 1 11/32 | 1.388 | 1.175 | 0.12 | 0.04 | 4.250 | 4.500 |
| 2 1/4 | 2.2500 | 2.305 | 2.214 | 3 3/8 | 3.375 | 3.262 | 3.897 | 3.719 | 1 1/2 | 1.548 | 1.327 | 0.19 | 0.06 | 4.750 | 5.000 |
| 2 1/2 | 2.5000 | 2.559 | 2.461 | 3 3/4 | 3.750 | 3.625 | 4.330 | 4.133 | 1 21/32 | 1.708 | 1.479 | 0.19 | 0.06 | 5.250 | 5.500 |
| 2 3/4 | 2.7500 | 2.827 | 2.711 | 4 1/8 | 4.125 | 3.988 | 4.763 | 4.546 | 1 13/16 | 1.869 | 1.632 | 0.19 | 0.06 | 5.750 | 6.000 |
| 3 | 3.0000 | 3.081 | 2.961 | 4 1/2 | 4.500 | 4.350 | 5.196 | 4.959 | 2 | 2.060 | 1.815 | 0.19 | 0.06 | 6.250 | 6.500 |
| 3 1/4 | 3.2500 | 3.335 | 3.210 | 4 7/8 | 4.875 | 4.712 | 5.629 | 5.372 | 2 3/16 | 2.251 | 1.936 | 0.19 | 0.06 | 6.750 | 7.000 |
| 3 1/2 | 3.5000 | 3.589 | 3.461 | 5 1/4 | 5.250 | 5.075 | 6.062 | 5.786 | 2 5/16 | 2.380 | 2.057 | 0.19 | 0.06 | 7.250 | 7.500 |
| 3 3/4 | 3.7500 | 3.858 | 3.726 | 5 5/8 | 5.625 | 5.437 | 6.495 | 6.198 | 2 1/2 | 2.572 | 2.241 | 0.19 | 0.06 | 7.750 | 8.000 |
| 4 | 4.000 | 4.111 | 3.975 | 6 | 6.000 | 5.800 | 6.928 | 6.612 | 2 11/16 | 2.764 | 2.424 | 0.19 | 0.06 | 8.250 | 8.500 |





Not for Resale

**Notes to Table 2:**

(1) **Surface Condition.** Bolts need not be finished on any surface except threads.

(2) **Top of Head.** Top of head shall be full form and chamfered, with the diameter of chamfer circle being equal to the maximum width across flats within a tolerance of minus 15%.

(3) **Head Taper.** Maximum width across flats and across corners shall not be exceeded. No transverse section through the head between 25% and 75% of actual head height, as measured from the bearing surface, shall be less than the minimum width across flats and across corners.

(4) **Bearing Surface.** A die seam across the bearing surface is permissible. Bearing surface shall be perpendicular to the axis of the body within a tolerance of 3 deg. for 1 in. size and smaller, and 2 deg. for sizes larger than 1 in. Angularity measurement shall be taken at a location to avoid interference from a die seam.

(5) **True Position of Head.** The axis of the head shall be located at true position with respect to the axis of the body (determined over a distance under the head equal to one diameter) within a tolerance zone having a diameter equivalent to 6% of the maximum width across flats, regardless of feature size.

(6) **Body Diameter.** There may be a reasonable swell or fin under the head or die seam on the body not to exceed the basic bolt diameter by the following:

0.030 in. for sizes up to ½ in.
0.050 in. for sizes ⅝ and ¾ in.
0.060 in. for sizes over ¾ in. to 1¼ in.
0.090 in. for sizes over 1¼ in. to 2 in.
0.120 in. for sizes over 2 in. to 3 in.
0.190 in. for sizes over 3 in.

The diameter of the unthreaded length on bolts which are threaded for full length shall not be less than the minimum pitch diameter of the thread nor greater than the maximum body diameter, *E*, max., specified in Table 2.

(7) **Reduced Diameter Body.** Bolts may be obtained in reduced diameter body style. These shall have a body diameter not less than the minimum pitch diameter of thread and not exceeding the minimum body diameter, *E*, min., shown in Table 2. Any swell or fin under the head or any die seam on the body shall not exceed, *E*, min., by the following:

0.030 in. for sizes up to ½ in.
0.050 in. for sizes ⅝ and ¾ in.
0.060 in. for sizes over ¾ in. to 1¼ in.
0.090 in. for sizes over 1¼ in. to 2 in.
0.120 in. for sizes over 2 in. to 3 in.
0.190 in. for sizes over 3 in.

(8) **Point.** Unless otherwise specified, bolts need not be pointed.

(9) **Straightness.** Shanks of bolts shall be straight within the following limits at MMC. For bolts with nominal lengths up to and including 12 in., the maximum camber shall be 0.006 in. per inch (0.006*L*) of bolt length. For bolts with nominal lengths over 12 in. up to and including 24 in., the maximum camber shall be 0.008 in. per inch (0.008*L*) of bolt length. A typical gage and gaging procedure for checking bolt straightness is given in Appendix II.

(10) **Length Tolerances.** Bolt length tolerances are given in Table 10. Tolerances for nonpointed products shall apply.

(11) **Thread Length.** The length of thread on bolts shall be controlled by the grip gaging length, $L_G$, max.

The maximum grip gaging length, as calculated and rounded to two decimal places for any bolt not threaded full length, shall be equal to the nominal bolt length minus the nominal thread length ($L_G$, max. $= L$, nom. $- L_T$). For bolts which are threaded full length, $L_G$, max. defines the unthreaded length under the head and shall not exceed the length of 2.5 times the thread pitch for sizes up to and including 1 in., and 3.5 times the thread pitch for sizes larger than 1 in. It shall be used as the criterion for inspection.

All bolts of nominal lengths equal to or shorter than the nominal thread length, $L_T$, plus a length equivalent to 2.5 times the thread pitch for sizes up to and including 1 in., and 3.5 times the thread pitch for sizes larger than 1 in., shall be threaded for full length.

Nominal thread length, $L_T$, is a reference dimension intended for calculation purposes only. Nominal thread length equals twice the basic thread diameter plus 0.25 in. for nominal bolt lengths up to and including 6 in., and twice the basic thread diameter plus 0.50 in. for nominal lengths over 6 in.

(12) **Incomplete Thread Diameter.** The major diameter of incomplete thread shall not exceed the actual major diameter of the full form thread.

(13) **Threads.** Threads, when rolled, shall be Unified Inch coarse, fine, or 8 thread series (UNRC, UNRF, or 8 UNR Series), Class 2A. Threads produced by other methods may be Unified Inch coarse, fine, or 8 thread series (UNC, UNF, or 8 UN Series), Class 2A. Acceptability of screw threads shall be determined based on System 21, ASME B1.3M, Screw Thread Gaging Systems for Dimensional Acceptability—Inch and Metric Threads (UN, UNR, UNJ, M, and MJ).

(14) **Identification Symbols.** Identification marking symbols on bolt heads shall be raised or indented at the



Copyright ASME International
Provided by IHS under license with ASME
No reproduction or networking permitted without license from IHS
Not for Resale

manufacturer's option unless otherwise specified. The marking shall be in accordance with the requirements of para. 2.8. Markings shall be legible to the unaided eye with the exception of corrective lenses. When raised, the height of the marking may not exceed 0.015 in. over the specified maximum head height for bolts 5/8 in. and smaller. For bolts larger than 5/8 in., the marking may not project more than 0.030 in. over the specified maximum head height. When indented, the depth of the marking shall not reduce the load-carrying capability of the fastener.

(15) **Material.** Unless otherwise specified, chemical and mechanical properties of steel bolts shall conform to ASTM A 307, Grade A. Other materials and grades shall be as agreed upon by manufacturer and purchaser.

(16) **Nominal Size.** Where specifying nominal size in decimals, zeros preceding the decimal and in the fourth decimal place shall be omitted.

(17) **Dimensional Conformance.** Unless otherwise specified, hex bolts shall have the following characteristics inspected to ASME B18.18.2M to the inspection levels shown:

| Characteristic | Inspection Level |
|---|---|
| Threads | C |
| Width across corners | C |
| Head height | C |
| Grip length | C |
| Visual | C |

If verifiable in-process inspection is used, see para. 2.10.

(18) **Additional Requirements.** For additional requirements, see Section 1, Introductory Notes, and Section 2, General Data.



Copyright ASME International
Provided by IHS under license with ASME
No reproduction or networking permitted without license from IHS
Not for Resale

Copyright ASME International
Provided by IHS under license with ASME
No reproduction or networking permitted without license from IHS



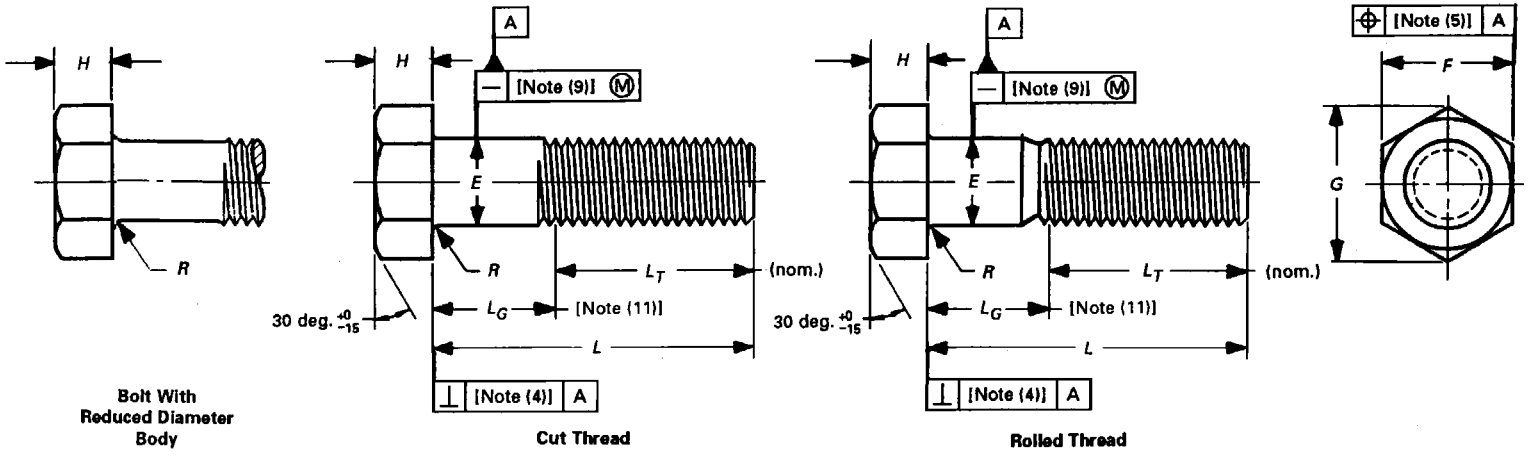


(a)

## TABLE 3 DIMENSIONS OF HEAVY HEX BOLTS

| Nominal Size or Basic Product Diameter [Note (16)] | | E | | F | | | G | | H | | | R | | $L_T$ | |
|---|---|---|---|---|---|---|---|---|---|---|---|---|---|---|---|
| | | Full Size Body Diameter [Notes (6), (7)] | | Width Across Flats [Note (3)] | | | Width Across Corners [Note (3)] | | Head Height | | | Radius of Fillet | | Thread Length for Bolt Lengths [Note (11)] | |
| | | | | | | | | | | | | | | 6 in. and Shorter | Over 6 in. |
| | | Max. | Min. | Basic | Max. | Min. | Max. | Min. | Basic | Max. | Min. | Max. | Min. | Nom. | Nom. |
| 1/2 | 0.5000 | 0.515 | 0.482 | 7/8 | 0.875 | 0.850 | 1.010 | 0.969 | 11/32 | 0.364 | 0.302 | 0.03 | 0.01 | 1.250 | 1.500 |
| 5/8 | 0.6250 | 0.642 | 0.605 | 1 1/16 | 1.062 | 1.031 | 1.227 | 1.175 | 27/64 | 0.444 | 0.378 | 0.06 | 0.02 | 1.500 | 1.750 |
| 3/4 | 0.7500 | 0.768 | 0.729 | 1 1/4 | 1.250 | 1.212 | 1.443 | 1.383 | 1/2 | 0.524 | 0.455 | 0.06 | 0.02 | 1.750 | 2.000 |
| 7/8 | 0.8750 | 0.895 | 0.852 | 1 7/16 | 1.438 | 1.394 | 1.660 | 1.589 | 37/64 | 0.604 | 0.531 | 0.06 | 0.02 | 2.000 | 2.250 |
| 1 | 1.0000 | 1.022 | 0.976 | 1 5/8 | 1.625 | 1.575 | 1.876 | 1.796 | 43/64 | 0.700 | 0.591 | 0.09 | 0.03 | 2.250 | 2.500 |
| 1 1/8 | 1.1250 | 1.149 | 1.098 | 1 13/16 | 1.812 | 1.756 | 2.093 | 2.002 | 3/4 | 0.780 | 0.658 | 0.09 | 0.03 | 2.500 | 2.750 |
| 1 1/4 | 1.2500 | 1.277 | 1.223 | 2 | 2.000 | 1.938 | 2.309 | 2.209 | 27/32 | 0.876 | 0.749 | 0.09 | 0.03 | 2.750 | 3.000 |
| 1 3/8 | 1.3750 | 1.404 | 1.345 | 2 3/16 | 2.188 | 2.119 | 2.526 | 2.416 | 29/32 | 0.940 | 0.810 | 0.09 | 0.03 | 3.000 | 3.250 |
| 1 1/2 | 1.5000 | 1.531 | 1.470 | 2 3/8 | 2.375 | 2.300 | 2.742 | 2.622 | 1 | 1.036 | 0.902 | 0.09 | 0.03 | 3.250 | 3.500 |
| 1 3/4 | 1.7500 | 1.785 | 1.716 | 2 3/4 | 2.750 | 2.662 | 3.175 | 3.035 | 1 5/32 | 1.196 | 1.054 | 0.12 | 0.04 | 3.750 | 4.000 |
| 2 | 2.0000 | 2.039 | 1.964 | 3 1/8 | 3.125 | 3.025 | 3.608 | 3.449 | 1 11/32 | 1.388 | 1.175 | 0.12 | 0.04 | 4.250 | 4.500 |
| 2 1/4 | 2.2500 | 2.305 | 2.214 | 3 1/2 | 3.500 | 3.388 | 4.041 | 3.862 | 1 1/2 | 1.548 | 1.327 | 0.19 | 0.06 | 4.750 | 5.000 |
| 2 1/2 | 2.5000 | 2.559 | 2.461 | 3 7/8 | 3.875 | 3.750 | 4.474 | 4.275 | 1 21/32 | 1.708 | 1.479 | 0.19 | 0.06 | 5.250 | 5.500 |
| 2 3/4 | 2.7500 | 2.827 | 2.711 | 4 1/4 | 4.250 | 4.112 | 4.907 | 4.688 | 1 13/16 | 1.869 | 1.632 | 0.19 | 0.06 | 5.750 | 6.000 |
| 3 | 3.0000 | 3.081 | 2.961 | 4 5/8 | 4.625 | 4.475 | 5.340 | 5.102 | 2 | 2.060 | 1.815 | 0.19 | 0.06 | 6.250 | 6.500 |



Not for Resale

**Notes to Table 3:**

(1) **Surface Condition.** Bolts need not be finished on any surface except threads.

(2) **Top of Head.** Top of head shall be full form and chamfered, with the diameter of chamfer circle being equal to the maximum width across flats, within a tolerance of minus 15%.

(3) **Head Taper.** Maximum width across flats and across corners shall not be exceeded. No transverse section through the head between 25% and 75% of actual head height, as measured from the bearing surface, shall be less than the minimum width across flats and across corners.

(4) **Bearing Surface.** A die seam across the bearing surface is permissible. Bearing surface shall be perpendicular to the axis of the body within a tolerance of 3 deg. for 1 in. size and smaller, and 2 deg. for sizes larger than 1 in. Angularity measurement shall be taken at a location to avoid interference from a die seam.

(5) **True Position of Head.** The axis of the head shall be located at true position with respect to the axis of the body (determined over a distance under the head equal to one diameter) within a tolerance zone having a diameter equivalent to 6% of the maximum width across flats, regardless of feature size.

(6) **Body Diameter.** Any swell or fin under the head or any die seam on the body shall not exceed the basic bolt diameter by the following:

0.030 in. for sizes up to ½ in.
0.050 in. for sizes ⅝ and ¾ in.
0.060 in. for sizes over ¾ to 1¼ in.
0.090 in. for sizes over 1¼ in. to 2 in.
0.120 in. for sizes over 2 in. to 3 in.

The diameter of the unthreaded length on bolts which are threaded for full length shall not be less than the minimum pitch diameter of the thread nor greater than the maximum body diameter, *E*, max., specified in Table 3.

(7) **Reduced Diameter Body.** Bolts may be obtained in reduced diameter body style. These shall have a body diameter not less than the minimum pitch diameter of the thread and not exceeding the minimum body diameter, *E*, min., shown in Table 3. Any swell or fin under the head or any die seam on the body shall not exceed, *E*, min., by the following:

0.030 in. for sizes up to ½ in.
0.050 in. for sizes ⅝ and ¾ in.
0.060 in. for sizes over ¾ in. to 1¼ in.
0.090 in. for sizes over 1¼ in. to 2 in.
0.120 in. for sizes over 2 in. to 3 in.
0.190 in. for sizes over 3 in.

(8) **Point.** Unless otherwise specified, bolts need not be pointed.

(9) **Straightness.** Shanks of bolts shall be straight within the following limits at MMC. For bolts with nominal lengths up to and including 12 in., the maximum camber shall be 0.006 in. per inch (0.006*L*) of bolt length. For bolts with nominal lengths over 12 in. up to and including 24 in., the maximum camber shall be 0.008 in. per inch (0.008*L*) of bolt length. A typical gage and gaging procedure for checking bolt straightness is given in Appendix II.

(10) **Length Tolerances.** Bolt length tolerances are given in Table 10. Tolerances for nonpointed products shall apply.

(11) **Thread Length.** The length of thread on bolts shall be controlled by the grip gaging length, $L_G$, max.

The maximum grip gaging length, as calculated and rounded to two decimal places for any bolt not threaded full length, shall be equal to the nominal bolt length minus the nominal thread length ($L_G$, max. = $L$, nom. − $L_T$). For bolts which are threaded full length, $L_G$, max. defines the unthreaded length under the head and shall not exceed the length of 2.5 times the thread pitch for sizes up to and including 1 in., and 3.5 times the thread pitch for sizes larger than 1 in. It shall be used as the criterion for inspection.

All bolts of nominal lengths equal to or shorter than the nominal thread length, $L_T$, plus a length equivalent to 2.5 times the thread pitch for sizes up to and including 1 in., and 3.5 times the thread pitch for sizes larger than 1 in. shall be threaded for full length.

Nominal thread length, $L_T$, is a reference dimension intended for calculation purposes only. Nominal thread length equals twice the basic thread diameter plus 0.25 in. for nominal bolt lengths up to and including 6 in., and twice the basic thread diameter plus 0.50 in. for nominal lengths over 6 in.

(12) **Incomplete Thread Diameter.** The major diameter of incomplete thread shall not exceed the actual major diameter of the full form thread.

(13) **Threads.** Threads, when rolled, shall be Unified Inch coarse, fine, or 8 thread series (UNRC, UNRF, or 8 UNR Series), Class 2A. Threads produced by other methods may be Unified Inch coarse, fine, or 8 thread series (UNC, UNF, or 8 UN Series), Class 2A. Acceptability of screw threads shall be determined based on System 21, ASME B1.3M, Screw Thread Gaging Systems for Dimensional Acceptability—Inch and Metric Screw Threads (UN, UNR, UNJ, M, and MJ).

(14) **Identification Symbols.** Identification marking symbols on bolt heads shall be raised or indented at the manufacturer's option unless otherwise specified. The



Copyright ASME International
Provided by IHS under license with ASME
No reproduction or networking permitted without license from IHS
Not for Resale

marking shall be in accordance with the requirements of para. 2.8. Markings shall be legible to the unaided eye with the exception of corrective lenses. When raised, the height of the marking may not exceed 0.015 in. over the specified maximum head height for bolts 5/8 in. and smaller. For bolts larger than 5/8 in., the marking may not project more than 0.030 in. over the specified maximum head height. When indented, the depth of the marking shall not reduce the load-carrying capability of the fastener.

(15) **Material.** Unless otherwise specified, chemical and mechanical properties of steel bolts shall conform to ASTM A 307, Grade A. Other materials and grades shall be as agreed upon by manufacturer and purchaser.

(16) **Nominal Size.** Where specifying nominal size in decimals, zeros preceding the decimal and in the fourth decimal place shall be omitted.

(17) **Dimensional Conformance.** Unless otherwise specified, heavy hex bolts shall have the following characteristics inspected to ASME B18.18.2M to the inspection levels shown:

| Characteristic | Inspection Level |
|---|---|
| Threads | C |
| Width across corners | C |
| Head height | C |
| Grip length | C |
| Visual | C |

If verifiable in-process inspection is used, see para. 2.10.

(18) **Additional Requirements.** For additional requirements, see Section 1, Introductory Notes, and Section 2, General Data.



Copyright ASME International
Provided by IHS under license with ASME
No reproduction or networking permitted without license from IHS
Not for Resale

Copyright ASME International
Provided by IHS under license with ASME
No reproduction or networking permitted without license from IHS



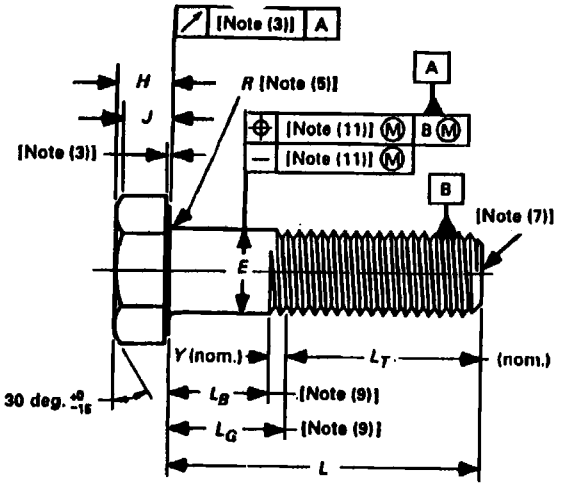


Cut Thread

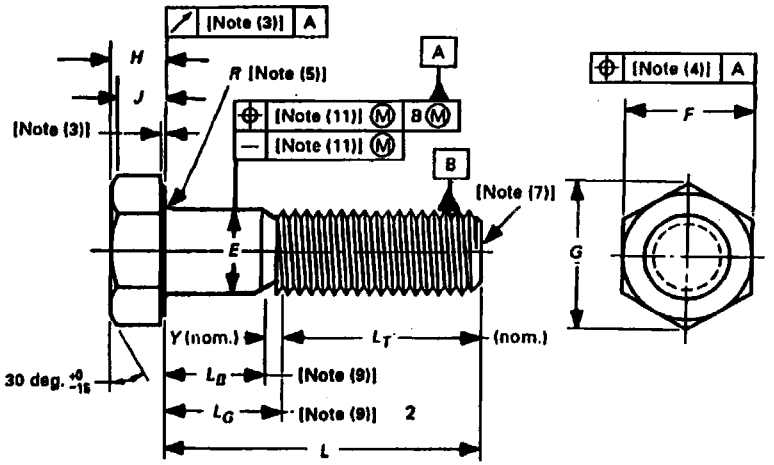


Rolled Thread

## TABLE 4 DIMENSIONS OF HEX CAP SCREWS

| Nominal Size or Basic Product Diameter [Note (15)] | | E | | F | | | G | | H | | | J | $L_T$ | | Y | Circular Runout of Bearing Surface FIM [Note (3)] |
|---|---|---|---|---|---|---|---|---|---|---|---|---|---|---|---|---|
| | | Body Diameter [Note (6)] | | Width Across Flats | | | Width Across Corners [Note (2)] | | Head Height | | | Wrenching Height [Note (2)] | Thread Length for Screw Lengths [Note (9)] | | Transition Thread Length [Notes (9), (10)] | |
| | | | | | | | | | | | | | 6 in. and Shorter | Over 6 in. | | |
| | | Max. | Min. | Basic | Max. | Min. | Max. | Min. | Basic | Max. | Min. | Min. | Nom. | Nom. | Max. | Max. |
| 1/4 | 0.2500 | 0.2500 | 0.2450 | 7/16 | 0.438 | 0.428 | 0.505 | 0.488 | 5/32 | 0.163 | 0.150 | 0.106 | 0.750 | 1.000 | 0.250 | 0.010 |
| 5/16 | 0.3125 | 0.3125 | 0.3065 | 1/2 | 0.500 | 0.489 | 0.577 | 0.557 | 13/64 | 0.211 | 0.195 | 0.140 | 0.875 | 1.125 | 0.278 | 0.011 |
| 3/8 | 0.3750 | 0.3750 | 0.3690 | 9/16 | 0.562 | 0.551 | 0.650 | 0.628 | 15/64 | 0.243 | 0.226 | 0.160 | 1.000 | 1.250 | 0.312 | 0.012 |
| 7/16 | 0.4375 | 0.4375 | 0.4305 | 5/8 | 0.625 | 0.612 | 0.722 | 0.698 | 9/32 | 0.291 | 0.272 | 0.195 | 1.125 | 1.375 | 0.357 | 0.013 |
| 1/2 | 0.5000 | 0.5000 | 0.4930 | 3/4 | 0.750 | 0.736 | 0.866 | 0.840 | 5/16 | 0.323 | 0.302 | 0.215 | 1.250 | 1.500 | 0.385 | 0.014 |
| 9/16 | 0.5625 | 0.5625 | 0.5545 | 13/16 | 0.812 | 0.798 | 0.938 | 0.910 | 23/64 | 0.371 | 0.348 | 0.250 | 1.375 | 1.625 | 0.417 | 0.015 |
| 5/8 | 0.6250 | 0.6250 | 0.6170 | 15/16 | 0.938 | 0.922 | 1.083 | 1.051 | 25/64 | 0.403 | 0.378 | 0.269 | 1.500 | 1.750 | 0.455 | 0.017 |
| 3/4 | 0.7500 | 0.7500 | 0.7410 | 1 1/8 | 1.125 | 1.100 | 1.299 | 1.254 | 15/32 | 0.483 | 0.455 | 0.324 | 1.750 | 2.000 | 0.500 | 0.020 |
| 7/8 | 0.8750 | 0.8750 | 0.8660 | 1 5/16 | 1.312 | 1.285 | 1.516 | 1.465 | 35/64 | 0.563 | 0.531 | 0.378 | 2.000 | 2.250 | 0.556 | 0.023 |
| 1 | 1.0000 | 1.0000 | 0.9900 | 1 1/2 | 1.500 | 1.469 | 1.732 | 1.675 | 39/64 | 0.627 | 0.591 | 0.416 | 2.250 | 2.500 | 0.625 | 0.026 |
| 1 1/8 | 1.1250 | 1.1250 | 1.1140 | 1 11/16 | 1.688 | 1.631 | 1.949 | 1.859 | 11/16 | 0.718 | 0.658 | 0.461 | 2.500 | 2.750 | 0.714 | 0.029 |
| 1 1/4 | 1.2500 | 1.2500 | 1.2390 | 1 7/8 | 1.875 | 1.812 | 2.165 | 2.066 | 25/32 | 0.813 | 0.749 | 0.530 | 2.750 | 3.000 | 0.714 | 0.033 |
| 1 3/8 | 1.3750 | 1.3750 | 1.3630 | 2 1/16 | 2.062 | 1.994 | 2.382 | 2.273 | 27/32 | 0.878 | 0.810 | 0.569 | 3.000 | 3.250 | 0.833 | 0.036 |
| 1 1/2 | 1.5000 | 1.5000 | 1.4880 | 2 1/4 | 2.250 | 2.175 | 2.598 | 2.480 | 1 5/16 | 0.974 | 0.902 | 0.640 | 3.250 | 3.500 | 0.833 | 0.039 |
| 1 3/4 | 1.7500 | 1.7500 | 1.7380 | 2 5/8 | 2.625 | 2.538 | 3.031 | 2.893 | 1 3/32 | 1.134 | 1.054 | 0.748 | 3.750 | 4.000 | 1.000 | 0.046 |
| 2 | 2.0000 | 2.0000 | 1.9880 | 3 | 3.000 | 2.900 | 3.464 | 3.306 | 1 7/32 | 1.263 | 1.175 | 0.825 | 4.250 | 4.500 | 1.111 | 0.052 |
| 2 1/4 | 2.2500 | 2.2500 | 2.2380 | 3 3/8 | 3.375 | 3.262 | 3.897 | 3.719 | 1 3/8 | 1.423 | 1.327 | 0.933 | ... | 5.000 | 1.111 | 0.059 |
| 2 1/2 | 2.5000 | 2.5000 | 2.4880 | 3 3/4 | 3.750 | 3.625 | 4.330 | 4.133 | 1 17/32 | 1.583 | 1.479 | 1.042 | ... | 5.500 | 1.250 | 0.065 |
| 2 3/4 | 2.7500 | 2.7500 | 2.7380 | 4 1/8 | 4.125 | 3.988 | 4.763 | 4.546 | 1 11/16 | 1.744 | 1.632 | 1.151 | ... | 6.000 | 1.250 | 0.072 |
| 3 | 3.0000 | 3.0000 | 2.9880 | 4 1/2 | 4.500 | 4.350 | 5.196 | 4.959 | 1 7/8 | 1.935 | 1.815 | 1.290 | ... | 6.500 | 1.250 | 0.079 |





Not for Resale

## TABLE 4A DIMENSIONS OF UNDERHEAD FILLETS

| Nominal Size or Basic Product Diameter | | Long Screws (Fig. 1) | | | | Long and Short Screws | | Short Screws (Fig. 2) | |
|---|---|---|---|---|---|---|---|---|---|
| | | $E_a$ | | $L_a$ | | $R$ | | $E_a$ | $L_f$ |
| | | Fillet Transition Diameter | | Fillet Length | | Radius of Fillet | | Fillet Transition Diameter | Fillet Length |
| | | Max. | Min. | Max. | Min. | Max. | Min. | Max. | Max. |
| 1/4 | 0.2500 | 0.300 | 0.280 | 0.087 | 0.043 | 0.025 | 0.015 | 0.300 | 0.043 |
| 5/16 | 0.3125 | 0.362 | 0.342 | 0.087 | 0.043 | 0.025 | 0.015 | 0.362 | 0.045 |
| 3/8 | 0.3750 | 0.425 | 0.405 | 0.087 | 0.043 | 0.025 | 0.015 | 0.425 | 0.048 |
| 7/16 | 0.4375 | 0.488 | 0.468 | 0.087 | 0.043 | 0.025 | 0.015 | 0.488 | 0.052 |
| 1/2 | 0.5000 | 0.550 | 0.530 | 0.087 | 0.043 | 0.025 | 0.015 | 0.550 | 0.053 |
| 9/16 | 0.5625 | 0.652 | 0.602 | 0.157 | 0.078 | 0.045 | 0.020 | 0.652 | 0.075 |
| 5/8 | 0.6250 | 0.715 | 0.665 | 0.157 | 0.078 | 0.045 | 0.020 | 0.715 | 0.078 |
| 3/4 | 0.7500 | 0.840 | 0.790 | 0.157 | 0.078 | 0.045 | 0.020 | 0.840 | 0.081 |
| 7/8 | 0.8750 | 1.005 | 0.955 | 0.227 | 0.113 | 0.065 | 0.040 | 1.005 | 0.105 |
| 1 | 1.0000 | 1.190 | 1.120 | 0.332 | 0.166 | 0.095 | 0.060 | 1.190 | 0.140 |
| 1 1/8 | 1.1250 | 1.315 | 1.245 | 0.332 | 0.166 | 0.095 | 0.060 | 1.315 | 0.146 |
| 1 1/4 | 1.2500 | 1.440 | 1.370 | 0.332 | 0.166 | 0.095 | 0.060 | 1.440 | 0.146 |
| 1 3/8 | 1.3750 | 1.565 | 1.495 | 0.332 | 0.166 | 0.095 | 0.060 | 1.565 | 0.154 |
| 1 1/2 | 1.5000 | 1.690 | 1.620 | 0.332 | 0.166 | 0.095 | 0.060 | 1.690 | 0.154 |
| 1 3/4 | 1.7500 | 1.940 | 1.870 | 0.332 | 0.166 | 0.095 | 0.060 | 1.940 | 0.166 |
| 2 | 2.0000 | 2.190 | 2.120 | 0.332 | 0.166 | 0.095 | 0.060 | 2.190 | 0.173 |
| 2 1/4 | 2.2500 | 2.440 | 2.370 | 0.332 | 0.166 | 0.095 | 0.060 | 2.440 | 0.173 |
| 2 1/2 | 2.5000 | 2.690 | 2.620 | 0.332 | 0.166 | 0.095 | 0.060 | 2.690 | 0.183 |
| 2 3/4 | 2.7500 | 2.940 | 2.870 | 0.332 | 0.166 | 0.095 | 0.060 | 2.940 | 0.183 |
| 3 | 3.0000 | 3.190 | 3.120 | 0.332 | 0.166 | 0.095 | 0.060 | 3.190 | 0.183 |



Copyright ASME International
Provided by IHS under license with ASME
No reproduction or networking permitted without license from IHS
Not for Resale

## TABLE 4B $L_G$, MAXIMUM AND $L_B$, MINIMUM LIMITATIONS FOR SHORT SCREWS THREADED FULL LENGTH

| Nominal Size of Basic Product Diameter | For Nominal Product Lengths [Note (1)] | $L_G$, Max. [Note (2)] | For Nominal Product Lengths | | $L_G$, Max. [Note (3)] | | | $L_B$, Min. [Note (4)] |
|---|---|---|---|---|---|---|---|---|
| | Less Than or Equal to | All Thread Series | Greater Than | Less Than or Equal to [Note (5)] | Coarse (UNC) Thread | Fine (UNF) Thread | 8 (UN) Thread | All Thread Series |
| 1/4 | 0.500 | 0.075 | 0.500 | 1.125 | 0.125 | 0.089 | ... | 0.043 |
| 5/16 | 0.625 | 0.083 | 0.625 | 1.250 | 0.139 | 0.104 | ... | 0.045 |
| 3/8 | 0.750 | 0.094 | 0.750 | 1.375 | 0.156 | 0.104 | ... | 0.048 |
| 7/16 | 0.875 | 0.107 | 0.875 | 1.625 | 0.179 | 0.125 | ... | 0.052 |
| 1/2 | 1.000 | 0.115 | 1.000 | 1.750 | 0.192 | 0.125 | ... | 0.053 |
| 9/16 | 1.125 | 0.125 | 1.125 | 2.000 | 0.208 | 0.139 | ... | 0.075 |
| 5/8 | 1.250 | 0.136 | 1.250 | 2.125 | 0.227 | 0.139 | ... | 0.078 |
| 3/4 | 1.500 | 0.150 | 1.500 | 2.500 | 0.250 | 0.156 | ... | 0.081 |
| 7/8 | ... | ... | ... | 2.750 | 0.278 | 0.179 | ... | 0.105 |
| 1 | ... | ... | ... | 3.000 | 0.312 | 0.208 | ... | 0.140 |
| 1 1/8 | ... | ... | ... | 3.500 | 0.357 | 0.208 | 0.312 | 0.146 |
| 1 1/4 | ... | ... | ... | 3.750 | 0.357 | 0.208 | 0.312 | 0.146 |
| 1 3/8 | ... | ... | ... | 4.250 | 0.417 | 0.208 | 0.312 | 0.154 |
| 1 1/2 | ... | ... | ... | 4.500 | 0.417 | 0.208 | 0.312 | 0.154 |
| 1 3/4 | ... | ... | ... | 5.125 | 0.500 | ... | 0.312 | 0.166 |
| 2 | ... | ... | ... | 5.750 | 0.556 | ... | 0.312 | 0.173 |
| 2 1/4 | ... | ... | ... | 6.500 | 0.556 | ... | 0.312 | 0.173 |
| 2 1/2 | ... | ... | ... | 7.125 | 0.625 | ... | 0.312 | 0.183 |
| 2 3/4 | ... | ... | ... | 7.625 | 0.625 | ... | 0.312 | 0.183 |
| 3 | ... | ... | ... | 8.125 | 0.625 | ... | 0.312 | 0.183 |

NOTES:
(1) Tabulated values are equal to 2 times the basic product diameter.
(2) Tabulated values are equal to 1.5 times the coarse thread (UNC) pitch.
(3) Tabulated values are equal to 2.5 times the thread pitch.
(4) $L_B$, min. equals fillet length, $L_f$, max., as given in Table 4A.
(5) Longest screw threaded full length.



Copyright ASME International
Provided by IHS under license with ASME
No reproduction or networking permitted without license from IHS
Not for Resale

**Notes to Table 4:**

(1) **Top of Head.** Top of head shall be full form and chamfered, with the diameter of chamfer circle being equal to the maximum width across flats within a tolerance of minus 15%.

(2) **Wrenching Height, *J*.** Wrenching height is a distance measured from the bearing surface up the side of the head at the corners. The width across corners shall be within specified limits for the full wrenching height.

(3) **Bearing Surface.** Bearing surface shall be flat and washer faced. Diameter of washer face shall be equal to the maximum width across flats within a tolerance of minus 10%.

Thickness of the washer face shall be not less than 0.015 in. nor greater than 0.025 in. for screw sizes ¾ in. and smaller, and not less than 0.015 in. nor greater than 0.035 in. for sizes larger than ¾ in. Measurement of washer face diameter shall be taken at a height of 0.004 in. above the bearing surface.

Circular runout of the bearing surface, with respect to the axis of the body, shall be within the FIM limits specified. Measurement of FIM shall be made as close to the periphery of the bearing surface as possible while the screw is held in a collet or other gripping device at a distance of one screw diameter from the underside of the head.

(4) **True Position of Head.** The axis of the head shall be located at true position with respect to the axis of the body (determined over a distance under the head equal to one diameter) within a tolerance zone whose diameter is equivalent to 6% of the maximum width across flats, regardless of feature size.

**(a)** (5) **Fillet.** Two styles of head-to-shank fillets are provided for long screws in lengths longer than the maximum lengths specified in Table 4B. Style 1 will be supplied unless Style 2 is specified by the purchaser.

Style 1 is a continuous radius in accordance with the maximum–minimum limits for $R$ shown in Table 4A.

Style 2 has an elliptical shape defined as a smooth, multiradius, concave curve tangent to the underhead bearing surface at a point no greater than one-half of $E_a$, max. or less than one-half of $E_a$, min. from the axis of the screw; and tangent to the shank at a distance from the underhead bearing surface within the limits specified for $L_a$. No radius in the fillet shall be less than $R$, min. (see Fig. 1 and Table 4A).

For short screws threaded full length (Table 4B), the fillet shall be a smooth, concave curve lying within the envelope established by either:

(*a*) a continuous radius tangent to the underhead bearing surface and min./max. shank diameter $E_1$, min. (min. pitch diameter) to $E$, max., whose value shall be no less than $R$, min. as specified in Table 4A; or

(*b*) a continuous or multiradius curve tangent to the underhead bearing surface at a point no greater than one-half $E_a$, max. from the axis of screw, and tangent to the maximum shank diameter, $E$, max., at a distance not exceeding $L_f$, max. from the bearing surface.

No radius in the multiradius curve shall be less than $R$, min. specified in Table 4A (see Fig. 2).

(6) **Body Diameter.** The diameter of body, except for a length equal to $L_a$, max. under the head, shall conform to the limits for $E$ given in Table 4. The diameter of the unthreaded length on short screws which are threaded for full length shall not be less than the minimum pitch diameter of the thread nor greater than the maximum body diameter, $E$, max., specified in Table 4 (see Fig. 2).

(7) **Point.** Point shall be chamfered or rounded at manufacturer's option from approximately 0.016 in. below the minor diameter of the thread. The first full formed thread at major diameter is located at a distance no greater than 2 times the pitch measured from the end of the screw. This distance is to be determined by measuring how far the point enters into a cylindrical NOT GO major diameter ring gage (reference Gage 3.1, ASME B1.2).

(8) **Length Tolerances.** Screw length tolerances are given in Table 10. Tolerances for pointed products shall apply.

(9) **Thread Length.** The length of thread on screws shall be controlled by the grip gaging length, $L_G$, max., and body length, $L_B$, min.

Long screws not threaded full length of diameters through 1¼ in. and lengths through 10 in. are specified in Table 5. For short screws threaded full length, $L_G$, max. and $L_B$, min. are given in Table 4B (see Fig. 3).

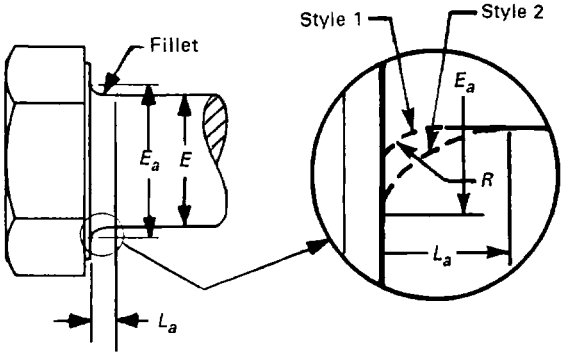


**FIG. 1 UNDERHEAD FILLET FOR LONG SCREWS**



Copyright ASME International
Provided by IHS under license with ASME
No reproduction or networking permitted without license from IHS
Not for Resale

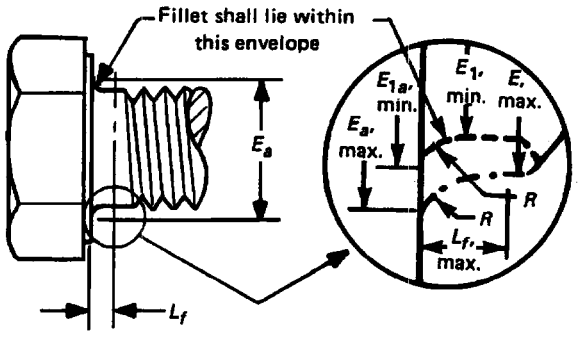


$$L_f, \text{ max.} = \frac{E_a, \text{ max.} - E_1, \text{ min.}}{2}$$

$E_1$, min. = minimum specified pitch diameter of coarse thread (UNC-2A)

$E_a$, max. = maximum fillet transition diameter (see Table 4A)

$E_{1a}$, min. = $E_a$, max. − 0.5 ($E_a$, max. − $E_1$, min.)

(a) **FIG. 2 UNDERHEAD FILLET FOR SHORT SCREWS THREADED FULL LENGTH**

For diameter-length combinations not included in Table 4B or Table 5, the maximum grip gaging length, $L_G$, max., for long screws which are not threaded full length, as calculated and rounded to two decimal places, shall be equal to the nominal screw length minus the nominal thread length ($L_G$, max. = $L$, nom. − $L_T$). It shall be used as the criterion for inspection.

Nominal thread length, $L_T$, is a reference dimension intended for calculation purposes only, which represents the distance from the extreme end of the screw to the last complete (full form) thread. Nominal thread length equals twice the basic thread diameter plus 0.25 in. for nominal screw length up to and including 6 in., and twice the basic thread diameter plus 0.50 in. for nominal lengths over 6 in.

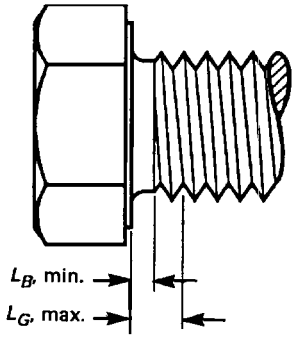


**FIG. 3 $L_G$, MAXIMUM AND $L_B$, MINIMUM FOR SHORT SCREWS THREADED FULL LENGTH**

Body length, $L_B$, min., is the distance measured parallel to the axis of screw from the underhead bearing surface to the last scratch of thread or to the top of the extrusion angle. For diameter length combinations not included in Table 4B or Table 5, the minimum body length, $L_B$, min., as calculated and rounded to two decimal places, shall be equal to the maximum grip gaging length minus the maximum transition thread length ($L_B$, min. = $L_G$, max. − $Y$, max.). It shall be a criterion for inspection.

Transition thread length, $Y$, max., is a reference dimension equal to five coarse (UNC) pitches and intended for calculation purposes only. It includes the length of incomplete threads, the extrusion angle on rolled threads, and tolerances on grip length.

(10) **Incomplete Thread Diameter.** The major diameter of incomplete thread shall not exceed the actual major diameter of the full form thread.

(11) **Straightness.** Shanks of screws shall be straight within the following limits at MMC. For screws with nominal lengths up to and including 12 in., the maximum camber shall be 0.006 in. per inch (0.006$L$) of screw length. For screws with nominal lengths over 12 in. up to and including 24 in., the maximum camber shall be 0.008 in. per inch (0.008$L$) of screw length. A typical gage and gaging procedure for checking screw straightness is given in Appendix II. (a)

(12) **Threads.** Threads, when rolled, shall be Unified Inch coarse, fine, or 8 thread series (UNRC, UNRF, or 8 UNR Series), Class 2A. Threads produced by other methods shall preferably be UNRC, UNRF, or 8 UNR, but at manufacturer's option, may be Unified Inch coarse, fine, or 8 thread series (UNC, UNF, or 8 UN Series), Class 2A. Acceptability of screw threads shall be determined based on System 21 ASME B1.3M, Screw Thread Gaging Systems for Dimensional Acceptability—Inch and Metric Screw Threads (UN, UNR, UNJ, M, and MJ).

(13) **Identification Symbols.** Identification marking symbols on screw heads shall be raised or indented at the manufacturer's option unless otherwise specified. The marking shall be in accordance with the requirements of para. 2.8. Markings shall be legible to the unaided eye with the exception of corrective lenses. When raised, the height of the marking may not exceed 0.015 in. over the specified maximum head height for screws 5/8 in. and smaller. For screws larger than 5/8 in., the marking may not project more than 0.030 in. over the specified maxi-



Copyright ASME International
Provided by IHS under license with ASME
No reproduction or networking permitted without license from IHS
Not for Resale

mum head height. When indented, the depth of the marking shall not reduce the load carrying capability of the fastener.

(14) **Material.** Unless otherwise specified, chemical and mechanical properties of steel screws shall conform to ASTM A 307, ASTM A 449, ASTM A 354 Grade BD, or SAE J429. Other materials and grades shall be as agreed upon by manufacturer and purchaser.

(15) **Nominal Size.** Where specifying nominal size in decimals, zeros preceding the decimal and in the fourth decimal place shall be omitted.

(16) **Dimensional Conformance.** Unless otherwise specified, hex cap screws shall have the following characteristics inspected to ASME B18.18.2M to the inspection levels shown:

| Characteristic | Inspection Level |
|---|---|
| Threads | C |
| Width across corners | C |
| Grip length | C |
| Screw length | C |
| Visual | C |

If verifiable in-process inspection is used, see para. 2.10.

(17) **Additional Requirements.** For additional requirements, see Section 1, Introductory Notes, and Section 2, General Data.



Copyright ASME International
Provided by IHS under license with ASME
No reproduction or networking permitted without license from IHS
Not for Resale

Copyright ASME International
Provided by IHS under license with ASME
No reproduction or networking permitted without license from IHS



## TABLE 5 MAXIMUM GRIP GAGING LENGTHS, $L_G$, AND MINIMUM BODY LENGTHS, $L_B$, FOR HEX CAP SCREWS AND HEAVY HEX SCREWS

| Nominal Diameter | 1/4 | | 5/16 | | 3/8 | | 7/16 | | 1/2 | | 9/16 | | 5/8 | | 3/4 | | 7/8 | | 1 | | 1 1/8 | | 1 1/4 | |
|---|---|---|---|---|---|---|---|---|---|---|---|---|---|---|---|---|---|---|---|---|---|---|---|---|
| Nominal Lengths | $L_G$ | $L_B$ | $L_G$ | $L_B$ | $L_G$ | $L_B$ | $L_G$ | $L_B$ | $L_G$ | $L_B$ | $L_G$ | $L_B$ | $L_G$ | $L_B$ | $L_G$ | $L_B$ | $L_G$ | $L_B$ | $L_G$ | $L_B$ | $L_G$ | $L_B$ | $L_G$ | $L_B$ |
| 1 1/4 | 0.50 | 0.25 | | | | | | | | | | | | | | | | | | | | | | |
| 1 3/8 | 0.63 | 0.38 | 0.50 | 0.22 | | | | | | | | | | | | | | | | | | | | |
| 1 1/2 | 0.75 | 0.50 | 0.62 | 0.35 | 0.50 | 0.19 | | | | | | | | | | | | | | | | | | |
| 1 5/8 | 0.88 | 0.62 | 0.75 | 0.47 | 0.62 | 0.31 | | | | | | | | | | | | | | | | | | |
| 1 3/4 | 1.00 | 0.75 | 0.88 | 0.60 | 0.75 | 0.44 | 0.63 | 0.27 | | | | | | | | | | | | | | | | |
| 1 7/8 | 1.12 | 0.88 | 1.00 | 0.72 | 0.88 | 0.56 | 0.75 | 0.39 | 0.63 | 0.24 | | | | | | | | | | | | | | |
| **2** | **1.25** | **1.00** | **1.12** | **0.85** | **1.00** | **0.69** | **0.88** | **0.52** | **0.75** | **0.38** | | | | | | | | | | | | | | |
| 2 1/8 | 1.38 | 1.12 | 1.25 | 0.97 | 1.12 | 0.81 | 1.00 | 0.64 | 0.88 | 0.49 | 0.75 | 0.33 | | | | | | | | | | | | |
| 2 1/4 | 1.50 | 1.25 | 1.38 | 1.10 | 1.25 | 0.94 | 1.12 | 0.77 | 1.00 | 0.52 | 0.88 | 0.46 | 0.75 | 0.30 | | | | | | | | | | |
| 2 3/8 | 1.62 | 1.38 | 1.50 | 1.22 | 1.38 | 1.06 | 1.25 | 0.89 | 1.12 | 0.74 | 1.00 | 0.58 | 0.88 | 0.42 | | | | | | | | | | |
| 2 1/2 | 1.75 | 1.50 | 1.62 | 1.35 | 1.50 | 1.19 | 1.38 | 1.02 | 1.25 | 0.86 | 1.12 | 0.75 | 1.00 | 0.55 | | | | | | | | | | |
| 2 5/8 | 1.88 | 1.62 | 1.75 | 1.47 | 1.62 | 1.31 | 1.50 | 1.14 | 1.38 | 0.99 | 1.25 | 0.83 | 1.12 | 0.67 | 0.88 | 0.38 | | | | | | | | |
| 2 3/4 | 2.00 | 1.75 | 1.88 | 1.60 | 1.75 | 1.44 | 1.62 | 1.27 | 1.50 | 1.12 | 1.38 | 0.96 | 1.25 | 0.80 | 1.00 | 0.50 | | | | | | | | |
| 2 7/8 | 2.12 | 1.88 | 2.00 | 1.72 | 1.88 | 1.56 | 1.75 | 1.39 | 1.62 | 1.24 | 1.50 | 1.08 | 1.38 | 0.92 | 1.12 | 0.62 | 0.88 | 0.32 | | | | | | |
| **3** | **2.25** | **2.00** | **2.12** | **1.85** | **2.00** | **1.69** | **1.88** | **1.52** | **1.75** | **1.36** | **1.62** | **1.21** | **1.50** | **1.05** | **1.25** | **0.75** | **1.00** | **0.44** | | | | | | |
| 3 1/4 | 2.50 | 2.25 | 2.38 | 2.10 | 2.25 | 1.94 | 2.12 | 1.77 | 2.00 | 1.62 | 1.88 | 1.46 | 1.75 | 1.30 | 1.50 | 1.00 | 1.25 | 0.69 | 1.00 | 0.38 | | | | |
| 3 1/2 | 2.75 | 2.50 | 2.62 | 2.35 | 2.50 | 2.19 | 2.38 | 2.02 | 2.25 | 1.86 | 2.12 | 1.71 | 2.00 | 1.55 | 1.75 | 1.25 | 1.50 | 0.94 | 1.25 | 0.62 | | | | |
| 3 3/4 | 3.00 | 2.75 | 2.88 | 2.60 | 2.75 | 2.44 | 2.62 | 2.27 | 2.50 | 2.12 | 2.38 | 1.96 | 2.25 | 1.80 | 2.00 | 1.50 | 1.75 | 1.19 | 1.50 | 0.88 | 1.25 | 0.54 | | |
| **4** | **3.25** | **3.00** | **3.12** | **2.85** | **3.00** | **2.69** | **2.88** | **2.52** | **2.75** | **2.36** | **2.62** | **2.21** | **2.50** | **2.05** | **2.25** | **1.75** | **2.00** | **1.44** | **1.75** | **1.12** | **1.50** | **0.79** | **1.25** | **0.54** |
| 4 1/4 | 3.50 | 3.25 | 3.38 | 3.10 | 3.25 | 2.94 | 3.12 | 2.77 | 3.00 | 2.62 | 2.88 | 2.46 | 2.75 | 2.30 | 2.50 | 2.00 | 2.25 | 1.69 | 2.00 | 1.38 | 1.75 | 1.04 | 1.50 | 0.79 |
| 4 1/2 | 3.75 | 3.50 | 3.62 | 3.35 | 3.50 | 3.19 | 3.38 | 3.02 | 3.25 | 2.86 | 3.12 | 2.71 | 3.00 | 2.55 | 2.75 | 2.25 | 2.50 | 1.94 | 2.25 | 1.62 | 2.00 | 1.29 | 1.75 | 1.04 |
| 4 3/4 | 4.00 | 3.75 | 3.88 | 3.60 | 3.75 | 3.44 | 3.62 | 3.27 | 3.50 | 3.12 | 3.38 | 2.96 | 3.25 | 2.80 | 3.00 | 2.50 | 2.75 | 2.19 | 2.50 | 1.88 | 2.25 | 1.54 | 2.00 | 1.29 |
| **5** | **4.25** | **4.00** | **4.12** | **3.85** | **4.00** | **3.69** | **3.88** | **3.52** | **3.75** | **3.36** | **3.62** | **3.21** | **3.50** | **3.05** | **3.25** | **2.50** | **3.00** | **2.44** | **2.75** | **2.12** | **2.50** | **1.79** | **2.25** | **1.54** |
| 5 1/4 | 4.50 | 4.25 | 4.38 | 4.10 | 4.25 | 3.94 | 4.12 | 3.77 | 4.00 | 3.62 | 3.88 | 3.46 | 3.75 | 3.30 | 3.50 | 3.00 | 3.25 | 2.69 | 3.00 | 2.38 | 2.75 | 2.04 | 2.50 | 1.79 |
| 5 1/2 | 4.75 | 4.50 | 4.62 | 4.35 | 4.50 | 4.19 | 4.38 | 4.02 | 4.25 | 3.87 | 4.12 | 3.71 | 4.00 | 3.55 | 3.75 | 3.25 | 3.50 | 2.94 | 3.25 | 2.62 | 3.00 | 2.29 | 2.75 | 2.04 |
| 5 3/4 | 5.00 | 4.75 | 4.88 | 4.60 | 4.75 | 4.44 | 4.63 | 4.27 | 4.50 | 4.12 | 4.38 | 3.96 | 4.25 | 3.80 | 4.00 | 3.50 | 3.75 | 3.19 | 3.50 | 2.88 | 3.25 | 2.54 | 3.00 | 2.29 |
| **6** | **5.25** | **5.00** | **5.12** | **4.85** | **5.00** | **4.69** | **4.88** | **4.52** | **4.75** | **4.36** | **4.62** | **4.21** | **4.50** | **4.05** | **4.25** | **3.75** | **4.00** | **3.44** | **3.75** | **3.12** | **3.50** | **2.79** | **3.25** | **2.54** |
| 6 1/4 | 5.25 | 5.00 | 5.12 | 4.85 | 5.00 | 4.69 | 4.88 | 4.52 | 4.75 | 4.36 | 4.62 | 4.21 | 4.50 | 4.05 | 4.25 | 3.75 | 4.00 | 3.44 | 3.75 | 3.12 | 3.50 | 2.79 | 3.25 | 2.54 |
| 6 1/2 | 5.50 | 5.25 | 5.38 | 5.10 | 5.25 | 4.94 | 5.12 | 4.77 | 5.00 | 4.62 | 4.88 | 4.46 | 4.75 | 4.30 | 4.50 | 4.00 | 4.25 | 3.69 | 4.00 | 3.38 | 3.75 | 3.04 | 3.50 | 2.79 |
| 6 3/4 | 5.75 | 5.50 | 5.62 | 5.35 | 5.50 | 5.19 | 5.38 | 5.02 | 5.25 | 4.86 | 5.12 | 4.71 | 5.00 | 4.55 | 4.75 | 4.25 | 4.50 | 3.94 | 4.25 | 3.63 | 4.00 | 3.29 | 3.75 | 3.04 |
| **7** | **6.00** | **5.75** | **5.88** | **5.80** | **5.75** | **5.44** | **5.62** | **5.27** | **5.50** | **5.12** | **5.38** | **4.96** | **5.25** | **4.80** | **5.00** | **4.50** | **4.75** | **4.19** | **4.50** | **3.88** | **4.25** | **3.54** | **4.00** | **3.29** |
| 7 1/4 | 6.25 | 6.00 | 6.12 | 5.85 | 6.00 | 5.69 | 5.88 | 5.52 | 5.75 | 5.36 | 5.62 | 5.20 | 5.50 | 5.05 | 5.25 | 4.75 | 5.00 | 4.44 | 4.75 | 4.12 | 4.50 | 3.79 | 4.25 | 3.54 |
| 7 1/2 | 6.50 | 6.25 | 6.38 | 6.10 | 6.25 | 5.94 | 6.12 | 5.77 | 6.00 | 5.62 | 5.88 | 5.46 | 5.75 | 5.30 | 5.50 | 5.00 | 5.25 | 4.69 | 5.00 | 4.38 | 4.75 | 4.04 | 4.50 | 3.79 |
| 7 3/4 | 6.75 | 6.50 | 6.62 | 6.35 | 6.50 | 6.19 | 6.38 | 6.02 | 6.25 | 5.87 | 6.12 | 5.71 | 6.00 | 5.55 | 5.75 | 5.25 | 5.50 | 4.94 | 5.25 | 4.62 | 5.00 | 4.29 | 4.75 | 4.04 |
| **8** | **7.00** | **6.75** | **6.88** | **6.60** | **6.75** | **6.44** | **6.62** | **6.27** | **6.50** | **6.12** | **6.38** | **5.96** | **6.25** | **5.80** | **6.00** | **5.50** | **5.75** | **5.19** | **5.50** | **4.88** | **5.25** | **4.54** | **5.00** | **4.29** |
| 8 1/4 | 7.25 | 7.00 | 7.12 | 6.85 | 7.00 | 6.69 | 6.88 | 6.52 | 6.75 | 6.36 | 6.62 | 6.21 | 6.50 | 6.05 | 6.25 | 5.75 | 6.00 | 5.44 | 5.75 | 5.12 | 5.50 | 4.79 | 5.25 | 4.54 |
| 8 1/2 | 7.50 | 7.25 | 7.38 | 7.10 | 7.25 | 6.94 | 7.12 | 6.77 | 7.00 | 6.62 | 6.88 | 6.46 | 6.75 | 6.30 | 6.50 | 6.00 | 6.25 | 5.69 | 6.00 | 5.38 | 5.75 | 5.04 | 5.50 | 4.79 |
| 8 3/4 | 7.75 | 7.50 | 7.62 | 7.35 | 7.50 | 7.19 | 7.38 | 7.02 | 7.25 | 6.86 | 7.12 | 6.71 | 7.00 | 6.55 | 6.75 | 6.25 | 6.50 | 5.94 | 6.25 | 5.62 | 6.00 | 5.29 | 5.75 | 5.04 |
| **9** | **8.00** | **7.75** | **7.88** | **7.60** | **7.75** | **7.44** | **7.62** | **7.27** | **7.50** | **7.12** | **7.38** | **6.96** | **7.25** | **6.80** | **7.00** | **6.50** | **6.75** | **6.19** | **6.50** | **5.88** | **6.25** | **5.54** | **6.00** | **5.29** |
| 9 1/4 | 8.25 | 8.00 | 8.12 | 7.85 | 8.00 | 7.69 | 7.88 | 7.52 | 7.75 | 7.36 | 7.62 | 7.21 | 7.50 | 7.05 | 7.25 | 6.75 | 7.00 | 6.44 | 6.75 | 6.12 | 6.50 | 5.79 | 6.25 | 5.54 |
| 9 1/2 | 8.50 | 8.25 | 8.38 | 8.10 | 8.25 | 7.94 | 8.12 | 7.77 | 8.00 | 7.62 | 7.88 | 7.46 | 7.75 | 7.30 | 7.50 | 7.00 | 7.25 | 6.89 | 7.00 | 6.38 | 6.75 | 6.04 | 6.50 | 5.79 |
| 9 3/4 | 8.75 | 8.50 | 8.62 | 8.35 | 8.50 | 8.19 | 8.38 | 8.02 | 8.25 | 7.86 | 8.12 | 7.71 | 8.00 | 7.55 | 7.75 | 7.25 | 7.50 | 6.94 | 7.25 | 6.62 | 7.00 | 6.29 | 6.75 | 6.04 |
| 10 | 9.00 | 8.75 | 8.88 | 8.60 | 8.75 | 8.44 | 8.62 | 8.27 | 8.50 | 8.12 | 8.38 | 7.96 | 8.25 | 7.80 | 8.00 | 7.50 | 7.75 | 7.19 | 7.50 | 6.88 | 7.25 | 6.54 | 7.00 | 6.29 |

GENERAL NOTE: Screw lengths above thick black line are fully threaded. For longer lengths, see Note (9) for hex cap screws or for heavy hex screws.





Not for Resale

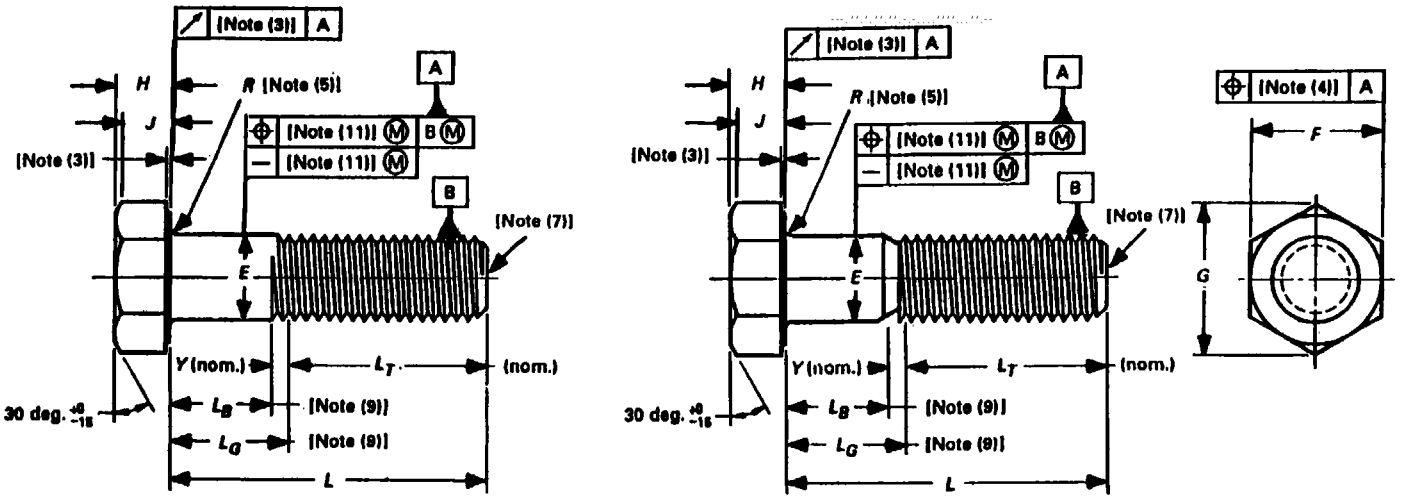


Cut Thread

Rolled Thread

## TABLE 6 DIMENSIONS OF HEAVY HEX SCREWS

| Nominal Size or Basic Product Diameter [Note (15)] | | E | | F | | | G | | H | | | J | $L_T$ | | Y | Circular Runout of Bearing Surface FIM [Note (3)] |
|---|---|---|---|---|---|---|---|---|---|---|---|---|---|---|---|---|
| | | Body Diameter [Note (6)] | | Width Across Flats | | | Width Across Corners [Note (2)] | | Head Height | | | Wrenching Height [Note (2)] | Thread Length for Screw Lengths [Note (9)] | | Transition Thread Length [Notes (9), (10)] | |
| | | | | | | | | | | | | | 6 in. and Shorter | Over 6 in. | | |
| | | Max. | Min. | Basic | Max. | Min. | Max. | Min. | Basic | Max. | Min. | Min. | Nom. | Nom. | Max. | Max. |
| 1/2 | 0.5000 | 0.5000 | 0.482 | 7/8 | 0.875 | 0.850 | 1.010 | 0.969 | 5/16 | 0.323 | 0.302 | 0.215 | 1.250 | 1.500 | 0.385 | 0.016 |
| 5/8 | 0.6250 | 0.6250 | 0.605 | 1 1/16 | 1.062 | 1.031 | 1.227 | 1.175 | 25/64 | 0.403 | 0.378 | 0.269 | 1.500 | 1.750 | 0.455 | 0.019 |
| 3/4 | 0.7500 | 0.7500 | 0.729 | 1 1/4 | 1.250 | 1.212 | 1.443 | 1.383 | 15/32 | 0.483 | 0.455 | 0.324 | 1.750 | 2.000 | 0.500 | 0.022 |
| 7/8 | 0.8750 | 0.8750 | 0.852 | 1 7/16 | 1.438 | 1.394 | 1.660 | 1.589 | 35/64 | 0.563 | 0.531 | 0.378 | 2.000 | 2.250 | 0.556 | 0.025 |
| 1 | 1.0000 | 1.0000 | 0.976 | 1 5/8 | 1.625 | 1.575 | 1.876 | 1.796 | 39/64 | 0.627 | 0.591 | 0.416 | 2.250 | 2.500 | 0.625 | 0.028 |
| 1 1/8 | 1.1250 | 1.1250 | 1.098 | 1 13/16 | 1.812 | 1.756 | 2.093 | 2.002 | 11/16 | 0.718 | 0.658 | 0.461 | 2.500 | 2.750 | 0.714 | 0.032 |
| 1 1/4 | 1.2500 | 1.2500 | 1.223 | 2 | 2.000 | 1.938 | 2.309 | 2.209 | 25/32 | 0.813 | 0.749 | 0.530 | 2.750 | 3.000 | 0.714 | 0.035 |
| 1 3/8 | 1.3750 | 1.3750 | 1.345 | 2 3/16 | 2.188 | 2.119 | 2.526 | 2.416 | 27/32 | 0.878 | 0.810 | 0.569 | 3.000 | 3.250 | 0.833 | 0.038 |
| 1 1/2 | 1.5000 | 1.5000 | 1.470 | 2 3/8 | 2.375 | 2.300 | 2.742 | 2.622 | 15/16 | 0.974 | 0.902 | 0.640 | 3.250 | 3.500 | 0.833 | 0.041 |
| 1 3/4 | 1.7500 | 1.7500 | 1.716 | 2 3/4 | 2.750 | 2.662 | 3.175 | 3.035 | 1 3/32 | 1.134 | 1.054 | 0.748 | 3.750 | 4.000 | 1.000 | 0.048 |
| 2 | 2.0000 | 2.0000 | 1.964 | 3 1/8 | 3.125 | 3.025 | 3.608 | 3.449 | 1 7/32 | 1.263 | 1.175 | 0.825 | 4.250 | 4.500 | 1.111 | 0.055 |
| 2 1/4 | 2.2500 | 2.2500 | 2.214 | 3 1/2 | 3.500 | 3.388 | 4.041 | 3.862 | 1 3/8 | 1.423 | 1.327 | 0.933 | ... | 5.000 | 1.111 | 0.061 |
| 2 1/2 | 2.5000 | 2.5000 | 2.461 | 3 7/8 | 3.875 | 3.750 | 4.474 | 4.275 | 1 17/32 | 1.583 | 1.479 | 1.042 | ... | 5.500 | 1.250 | 0.068 |
| 2 3/4 | 2.7500 | 2.7500 | 2.711 | 4 1/4 | 4.250 | 4.112 | 4.907 | 4.688 | 1 11/16 | 1.744 | 1.632 | 1.151 | ... | 6.000 | 1.250 | 0.074 |
| 3 | 3.0000 | 3.0000 | 2.961 | 4 5/8 | 4.625 | 4.475 | 5.340 | 5.102 | 1 7/8 | 1.935 | 1.815 | 1.290 | ... | 6.500 | 1.250 | 0.081 |



Copyright ASME International
Provided by IHS under license with ASME
No reproduction or networking permitted without license from IHS

Not for Resale

## TABLE 6A DIMENSIONS OF UNDERHEAD FILLETS

| Nominal Size or Basic Product Diameter | | Long Screws (Fig. 4) | | | | Long and Short Screws | | Short Screws (Fig. 5) | |
|---|---|---|---|---|---|---|---|---|---|
| | | $E_a$ | | $L_a$ | | $R$ | | $E_a$ | $L_f$ |
| | | Fillet Transition Diameter | | Fillet Length | | Radius of Fillet | | Fillet Transition Diameter | Fillet Length |
| | | Max. | Min. | Max. | Min. | Max. | Min. | Max. | Max. |
| 1/2 | 0.5000 | 0.550 | 0.530 | 0.087 | 0.043 | 0.025 | 0.015 | 0.550 | 0.053 |
| 5/8 | 0.6250 | 0.715 | 0.665 | 0.157 | 0.078 | 0.045 | 0.020 | 0.715 | 0.078 |
| 3/4 | 0.7500 | 0.840 | 0.790 | 0.157 | 0.078 | 0.045 | 0.020 | 0.840 | 0.081 |
| 7/8 | 0.8750 | 1.005 | 0.955 | 0.227 | 0.113 | 0.065 | 0.040 | 1.005 | 0.105 |
| 1 | 1.0000 | 1.190 | 1.120 | 0.332 | 0.166 | 0.095 | 0.060 | 1.190 | 0.140 |
| 1 1/8 | 1.1250 | 1.315 | 1.245 | 0.332 | 0.166 | 0.095 | 0.060 | 1.315 | 0.146 |
| 1 1/4 | 1.2500 | 1.440 | 1.370 | 0.332 | 0.166 | 0.095 | 0.060 | 1.440 | 0.146 |
| 1 3/8 | 1.3750 | 1.565 | 1.495 | 0.332 | 0.166 | 0.095 | 0.060 | 1.565 | 0.154 |
| 1 1/2 | 1.5000 | 1.690 | 1.620 | 0.332 | 0.166 | 0.095 | 0.060 | 1.690 | 0.154 |
| 1 3/4 | 1.7500 | 1.940 | 1.870 | 0.332 | 0.166 | 0.095 | 0.060 | 1.940 | 0.166 |
| 2 | 2.0000 | 2.190 | 2.120 | 0.332 | 0.166 | 0.095 | 0.060 | 2.190 | 0.173 |
| 2 1/4 | 2.2500 | 2.440 | 2.370 | 0.332 | 0.166 | 0.095 | 0.060 | 2.440 | 0.173 |
| 2 1/2 | 2.5000 | 2.690 | 2.620 | 0.332 | 0.166 | 0.095 | 0.060 | 2.690 | 0.183 |
| 2 3/4 | 2.7500 | 2.940 | 2.870 | 0.332 | 0.166 | 0.095 | 0.060 | 2.940 | 0.183 |
| 3 | 3.0000 | 3.190 | 3.120 | 0.332 | 0.166 | 0.095 | 0.060 | 3.190 | 0.183 |



Copyright ASME International
Provided by IHS under license with ASME
No reproduction or networking permitted without license from IHS
Not for Resale

## TABLE 6B
## $L_G$, MAXIMUM AND $L_B$, MINIMUM LIMITATIONS FOR SHORT SCREWS THREADED FULL LENGTH

| Nominal Size or Basic Product Diameter | For Nominal Product Lengths [Note (1)] | $L_G$, Max. [Note (2)] | For Nominal Product Lengths | | $L_G$, Max. [Note (3)] | | | $L_B$, Min. [Note (4)] |
|---|---|---|---|---|---|---|---|---|
| | Less Than or Equal to | All Thread Series | Less Than | Less Than or Equal to [Note (5)] | Coarse (UNC) Thread | Fine (UNF) Thread | 8 (UN) Thread | All Thread Series |
| 1/2 | 1.000 | 0.192 | 1.000 | 1.750 | 0.192 | 0.125 | ... | 0.053 |
| 5/8 | 1.250 | 0.227 | 1.250 | 2.125 | 0.227 | 0.139 | ... | 0.078 |
| 3/4 | 1.500 | 0.250 | 1.500 | 2.500 | 0.250 | 0.156 | ... | 0.081 |
| 7/8 | ... | ... | ... | 2.750 | 0.278 | 0.179 | ... | 0.105 |
| 1 | ... | ... | ... | 3.000 | 0.312 | 0.208 | ... | 0.140 |
| 1 1/8 | ... | ... | ... | 3.500 | 0.357 | 0.208 | 0.312 | 0.146 |
| 1 1/4 | ... | ... | ... | 3.750 | 0.357 | 0.208 | 0.312 | 0.146 |
| 1 3/8 | ... | ... | ... | 4.250 | 0.417 | 0.208 | 0.312 | 0.154 |
| 1 1/2 | ... | ... | ... | 4.500 | 0.417 | 0.208 | 0.312 | 0.154 |
| 1 3/4 | ... | ... | ... | 5.125 | 0.500 | ... | 0.312 | 0.166 |
| 2 | ... | ... | ... | 5.750 | 0.556 | ... | 0.312 | 0.173 |
| 2 1/4 | ... | ... | ... | 6.500 | 0.556 | ... | 0.312 | 0.173 |
| 2 1/2 | ... | ... | ... | 7.125 | 0.625 | ... | 0.312 | 0.183 |
| 2 3/4 | ... | ... | ... | 7.625 | 0.625 | ... | 0.312 | 0.183 |
| 3 | ... | ... | ... | 8.125 | 0.625 | ... | 0.312 | 0.183 |

NOTES:
(1) Tabulated values are equal to 2 times the basic product diameter.
(2) Tabulated values are equal to 1.5 times the coarse thread (UNC) pitch.
(3) Tabulated values are equal to 2.5 times the thread pitch.
(4) $L_B$, min. equals fillet length, $L_f$, max., as given in Table 6A.
(5) Longest screw threaded full length.



Copyright ASME International
Provided by IHS under license with ASME
No reproduction or networking permitted without license from IHS Not for Resale

**Notes to Table 6:**

(1) **Top of Head.** Top of head shall be full form and chamfered with the diameter of chamfer circle being equal to the maximum width across flats, within a tolerance of minus 15%.

(2) **Wrenching Height, *J*.** Wrenching height is a distance measured from the bearing surface up the side of the head at the corners. The width across corners shall be within the specified limits for minimum wrenching height.

(3) **Bearing Surface.** Bearing surface shall be flat and washer faced. Diameter of washer face shall be equal to the maximum width across flats within a tolerance of minus 10%.

Thickness of the washer face shall be not less than 0.015 in. nor greater than 0.025 in. for screw sizes 3/4 in. and smaller, and not less than 0.015 in. nor greater than 0.035 in. for sizes larger than 3/4 in. Measurement of washer face diameter shall be taken at a height of 0.004 in. above the bearing surface.

Circular runout of the bearing surface with respect to the axis of the body shall be within the FIM limits specified. Measurement of FIM shall be made as close to the periphery of the bearing surface as possible while the screw is being held in a collet or other gripping device at a distance of one screw diameter from the underside of the head.

(4) **True Position of Head.** The axis of the head shall be located at true position with respect to the axis of the body (determined over a distance under the head equal to one diameter) within a tolerance zone having a diameter equivalent to 6% of the maximum width across flats, regardless of feature size.

(5) **Fillet.** Two styles of head-to-shank fillets are provided for long screws in lengths longer than the maximum length specified in Table 6B. Style 1 will be supplied unless Style 2 is specified by the purchaser.

Style 1 is a continuous radius in accordance with the maximum-minimum limits for $R$ shown in Table 6A.

Style 2 has an elliptical shape defined as a smooth, multiradius, concave curve tangent to the underhead bearing surface at a point no greater than one-half of $E_a$, max. nor less than one-half of $E_a$, min. from the axis of the screw and tangent to the shank at a distance from the underhead bearing surface within the limits specified for $L_a$. No radius in the fillet shall be less than $R$, min. (see Fig. 4 and Table 6A).

For short screws threaded full length (Table 6B), the fillet shall be a smooth, concave curve lying within the envelope established by either:

(*a*) a continuous radius tangent to the underhead bearing surface and min./max. shank diameter, $E_1$ (min. pitch diameter) to $E$, max., whose value shall be no less than $R$, min. as specified in Table 6A; or

(*b*) a continuous or multiradius curve tangent to the underhead bearing surface at a point no greater than one half $E_a$, max. from the axis of screw and tangent to the maximum shank diameter, $E$, max., at a distance not exceeding $L_f$, min. from the bearing surface. No radius in the curve shall be less than $R$, min., as specified in Table 6A (see Fig. 5).

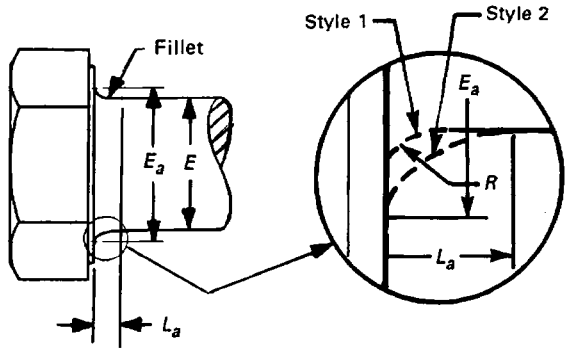


**FIG. 4 UNDERHEAD FILLET FOR LONG SCREWS**

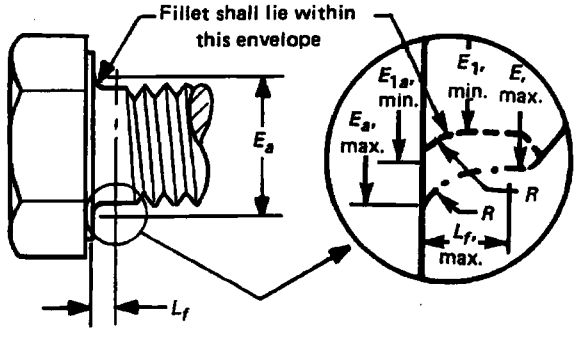


$$L_f, \text{ max.} = \frac{E_a, \text{ max.} - E_1, \text{ min.}}{2}$$

$E_1$, min. = minimum specified pitch diameter of coarse thread (UNC)

$E_a$, max. = maximum fillet transition diameter (see Table 6A)

$E_{1a}$, min. = $E_a$, max. – 0.5 ($E_a$, max. – $E_1$, min.)

**FIG. 5 UNDERHEAD FILLET FOR SHORT SCREWS THREADED FULL LENGTH (a)**



Copyright ASME International
Provided by IHS under license with ASME
No reproduction or networking permitted without license from IHS
Not for Resale

(6) **Body Diameter.** The diameter of body, except for a length equal to $L_a$, max. under the head, shall conform to the limits for $E$ given in Table 6. The diameter of the unthreaded length on short screws which are threaded for full length shall not be less than the minimum pitch diameter of the thread nor greater than the maximum body diameter, $E$, max., specified in Table 6. Hot forged screws may have a reasonable swell under the head provided the straightness requirement, Note (11), is met.

(a) (7) **Point.** Point shall be chamfered or rounded at manufacturer's option from approximately 0.016 in. below the minor diameter of the thread. The first full formed thread at major diameter is located at a distance no greater than 2 times the pitch measured from the end of the screw. This distance is determined by measuring how far the point enters into a cylindrical NOT GO major diameter ring gage (ref. Gage 3.1 ASME B1.2).

(8) **Length Tolerances.** Screw length tolerances are given in Table 10. Tolerances for pointed products shall apply.

(9) **Thread Length.** The length of thread on screws shall be controlled by the grip gaging length, $L_G$, max., and body length, $L_B$, min. For long screws threaded full length of diameters through 1¼ in. and lengths through 10 in., the values for $L_G$, max. and $L_B$, min. are specified in Table 5. For short screws threaded full length, $L_G$, max. and $L_B$, min. are given in Table 6B (see Fig. 3).

For diameter-length combinations not included in Table 6B or Table 5, the maximum grip gaging length, $L_G$, max., for long screws which are not threaded full length, as calculated and rounded to two decimal places, shall be equal to the nominal screw length minus the nominal thread length ($L_G$, max. = $L$, nom. − $L_T$). It shall be used as the criterion for inspection.

Nominal thread length, $L_T$, is a reference dimension intended for calculation purposes only. It represents the distance from the extreme end of the screw to the last complete (full form) thread. Nominal thread length equals twice the basic thread diameter plus 0.25 in. for nominal bolt lengths up to and including 6 in., and twice the basic thread diameter plus 0.50 in. for nominal lengths over 6 in.

Transition thread length, $Y$, max., is a reference dimension equal to five coarse (UNC) pitches and is intended for calculation purposes only. It includes the length of incomplete threads, the extrusion angle on rolled threads, and the tolerances on grip length.

For diameter-length combinations not included in Table 5 or Table 6B, the minimum body length, as calculated and rounded to two decimal places, shall be equal to the maximum grip gaging length minus the maximum transition thread length ($L_B$, min. = $L_G$, max. − $Y$, max.). It shall be used as the criterion for inspection.

(10) **Incomplete Thread Diameter.** The major diameter of incomplete thread shall not exceed the actual major diameter of the full form thread.

(11) **Straightness.** Shanks of screws shall be straight within the following limits at MMC. For screws with nominal lengths up to and including 12 in., the maximum camber shall be 0.006 in. per inch (0.006$L$) of screw length. For screws with nominal lengths over 12 in. up to and including 24 in., the maximum camber shall be 0.008 in. per inch (0.008$L$) of screw length. A typical gage and gaging procedure for checking screw straightness is given in Appendix II. (a)

(12) **Threads.** Threads, when rolled, shall be Unified Inch coarse, fine, or 8 thread series (UNRC, UNRF, or 8 UNR Series), Class 2A in accordance with ASME B1.1. Threads produced by other methods shall preferably be UNRC, UNRF, or 8 UNR, but at manufacturer's option, may be Unified Inch coarse, fine, or 8 thread series (UNC, UNF, or UN Series), Class 2A. Acceptability of screw threads shall be determined based on System 21 of ASME B1.3M, Screw Thread Gaging Systems for Dimensional Acceptability.

(13) **Identification Symbols.** Identification marking symbols on screw heads shall be raised or indented at the manufacturer's option unless otherwise specified. The marking shall be in accordance with the requirements of para. 2.8. Markings shall be legible to the unaided eye with the exception of corrective lenses. When raised, the height of the marking may not exceed 0.015 in. over the specified maximum head height for screws ⅝ in. and smaller. For screws larger than ⅝ in., the marking may not project more than 0.030 in. over the specified maximum head height. When indented, the depth of the marking shall not reduce the load carrying capability of the fastener.

(14) **Material.** Unless otherwise specified, chemical and mechanical properties of steel screws shall conform to ASTM A 307, ASTM A 449, ASTM A 354 Grade BD, or SAE J429. Other materials and grades shall be as agreed upon by manufacturer and purchaser.

(15) **Nominal Size.** Where specifying nominal size in decimals, zeros preceding the decimal and in the fourth decimal place shall be omitted.

(16) **Dimensional Conformance.** Unless otherwise specified, heavy hex screws shall have the following characteristics inspected to ASME B18.18.2M to the inspection levels shown:



Copyright ASME International
Provided by IHS under license with ASME
No reproduction or networking permitted without license from IHS Not for Resale

| Characteristic | Inspection Level |
|---|---|
| Threads | C |
| Head height | C |
| Grip length | C |
| Screw length | C |
| Visual | C |

If verifiable in-process inspection is used, see para. 2.10.

(17) **Additional Requirements.** For additional requirements, see Section 1, Introductory Notes, and Section 2, General Data.



Copyright ASME International
Provided by IHS under license with ASME
No reproduction or networking permitted without license from IHS
Not for Resale

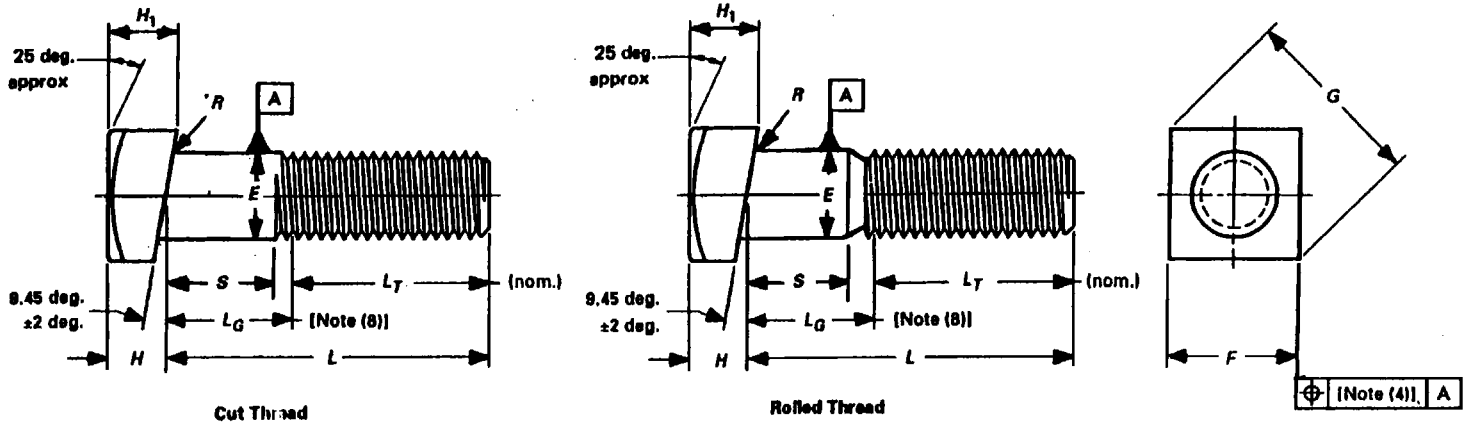


## TABLE 7 DIMENSIONS OF ASKEW HEAD BOLTS

| Nominal or Basic Bolt Diameter [Note (12)] | | E | | F | | | G | | $H_1$ | | H | R | | S | $L_T$ | |
|---|---|---|---|---|---|---|---|---|---|---|---|---|---|---|---|---|
| | | Body Diameter [Note (5)] | | Width Across Flats | | | Width Across Corners | | Head Height [Note (2)] | | Mid Height [Note (2)] | Radius of Fillet | | Unthreaded Length [Note (8)] | Thread Length for Bolt Lengths [Note (8)] | |
| | | Max. | Min. | Basic | Max. | Min. | Max. | Min. | Max. | Min. | Ref. | Max. | Min. | Max. | 6 in. and Shorter | Over 6 in. |
| | | | | | | | | | | | | | | | Nom. | Nom. |
| 3/8 | 0.3750 | 0.388 | 0.360 | 9/16 | 0.562 | 0.544 | 0.795 | 0.747 | 0.317 | 0.277 | 0.250 | 0.03 | 0.01 | 0.250 | 1.000 | 1.250 |
| 1/2 | 0.5000 | 0.515 | 0.482 | 3/4 | 0.750 | 0.725 | 1.061 | 0.995 | 0.411 | 0.371 | 0.328 | 0.03 | 0.01 | 0.312 | 1.250 | 1.500 |
| 5/8 | 0.6250 | 0.642 | 0.605 | 15/16 | 0.938 | 0.906 | 1.326 | 1.244 | 0.520 | 0.480 | 0.422 | 0.06 | 0.02 | 0.344 | 1.500 | 1.750 |
| 3/4 | 0.7500 | 0.768 | 0.729 | 1 1/8 | 1.125 | 1.088 | 1.591 | 1.494 | 0.614 | 0.574 | 0.500 | 0.06 | 0.02 | 0.406 | 1.750 | 2.000 |
| 7/8 | 0.8750 | 0.895 | 0.852 | 1 5/16 | 1.312 | 1.269 | 1.856 | 1.742 | 0.723 | 0.683 | 0.594 | 0.06 | 0.02 | 0.438 | 2.000 | 2.250 |
| 1 | 1.0000 | 1.022 | 0.976 | 1 1/2 | 1.500 | 1.450 | 2.121 | 1.991 | 0.801 | 0.761 | 0.656 | 0.09 | 0.03 | 0.500 | 2.250 | 2.500 |



Copyright ASME International
Provided by IHS under license with ASME
No reproduction or networking permitted without license from IHS

Not for Resale

**Notes to Table 7:**

(1) **Top of Head.** Top of head shall be full form and chamfered or rounded with the diameter of chamfer circle or start of rounding being equal to the maximum width across flats within a tolerance of minus 15%.

(2) **Head Height.** Mid-height, $H$, is a reference dimension and equals the basic head height of square bolts as given in Table 1. Head height, $H_1$, is computed as mid height, $H$, plus 0.0833 times the specified maximum width across flats, $F$. Tolerance on head height, $H_1$, is plus and minus 0.020 in. from computed head height.

(3) **Bearing Surface.** A die seam across the bearing surface is permissible. Angle of bearing surface with respect to shank is based on the 2 in. 12 slope of the inner flange of American Standard beams and channels.

(4) **True Position and Head.** The axis of the head shall be located at true position with respect to the axis of the body (determined over a distance under the head equal to one diameter) within a tolerance zone having a diameter equivalent to 6% of the maximum width across flats, regardless of feature size.

(5) **Body Diameter.** Any swell or fin under the head or any die seam on the body shall not exceed the basic bolt diameter by the following:

0.030 in. for sizes 3/8 and 1/2 in.
0.050 in. for sizes 5/8 and 3/4 in.
0.060 in. for sizes 7/8 and 1 in.

(6) **Point.** Unless otherwise specified, bolts need not be pointed.

(7) **Length Tolerances.** Bolt length tolerances are given in Table 10. Tolerances for nonpointed products shall apply.

(8) **Thread Length.** The length of thread on bolts shall be controlled by the grip gaging length, $L_G$, max.

The maximum grip gaging length, as calculated and rounded to two decimal places, for any bolt length shall be equal to the nominal bolt length minus the nominal thread length ($L_G$, max. = $L$, nom. − $L_T$). It represents the minimum design grip length of the joint and shall be used as the criterion for inspection and for determining thread availability when selecting bolt lengths, even though usable threads may extend beyond this point.

All bolts of nominal lengths equal to or shorter than the nominal thread length, $L_T$, plus the unthreaded length, $S$, shall be threaded for full length. The distance from the bearing surface of the head, as measured at mid-height of head to the last scratch of thread, shall not exceed the unthreaded length, $S$. The distance from the bearing surface of the head, as measured at mid-height, to the first complete (full form) thread, as measured with a GO thread ring gage assembled by hand as far as the thread will permit, shall not exceed the unthreaded length, $S$, plus a length of 2½ threads.

Nominal thread length, $L_T$, is a reference dimension, intended for calculation purposes only, which represents the distance from the extreme end of the bolt to the last complete (full form) thread. Nominal thread length equals twice the basic thread diameter plus 0.25 in. for lengths up to and including 6 in., and twice the basic diameter plus 0.50 in. for lengths over 6 in.

(9) **Threads.** Threads, when rolled, shall be Unified Inch coarse (UNRC Thread Series), Class 2A in accordance with ASME B1.1. Threads produced by other methods may be Unified Inch coarse series (UNC), Class 2A. Acceptability of screw threads shall be determined based on System 21, ASME B1.3M, Screw Thread Gaging Systems for Dimensional Acceptability—Inch and Metric Screw Threads (UN, UNR, UNJ, M, and MJ).

(10) **Material.** Unless otherwise specified, chemical and mechanical properties of steel bolts shall conform to ASTM A 307, Grade A. Other materials shall be as agreed upon by manufacturer and purchaser.

(11) **Identification Symbols.** Identification marking symbols on bolt heads shall be raised or indented at the manufacturer's option unless otherwise specified. The marking shall be in accordance with the requirements of para. 2.8. Markings shall be legible to the unaided eye with the exception of corrective lenses. When raised, the height of the marking may not exceed 0.015 in. over the specified maximum head height for bolts 5/8 in. and smaller. For bolts larger than 5/8 in., the marking may not project more than 0.030 in. over the specified maximum head height. When indented, the depth of the marking shall not reduce the load carrying capability of the fastener.

(12) **Nominal Size.** Where specifying nominal size in decimals, zeros preceding decimal and in the fourth decimal place shall be omitted.

(13) **Dimensional Conformance.** Unless otherwise specified, askew head bolts shall have the following characteristics inspected to ASME B18.18.2M to the inspection levels shown:

| Characteristic | Inspection Level |
|---|---|
| Bearing surface angle | C |
| Grip length | C |
| Threads | C |
| Visual | C |

If verifiable in-process inspection is used, see para. 2.10.

(14) **Additional Requirements.** For additional requirements, see Section 1, Introductory Notes, and Section 2, General Data.



Copyright ASME International
Provided by IHS under license with ASME
No reproduction or networking permitted without license from IHS
Not for Resale

Copyright ASME International
Provided by IHS under license with ASME
No reproduction or networking permitted without license from IHS



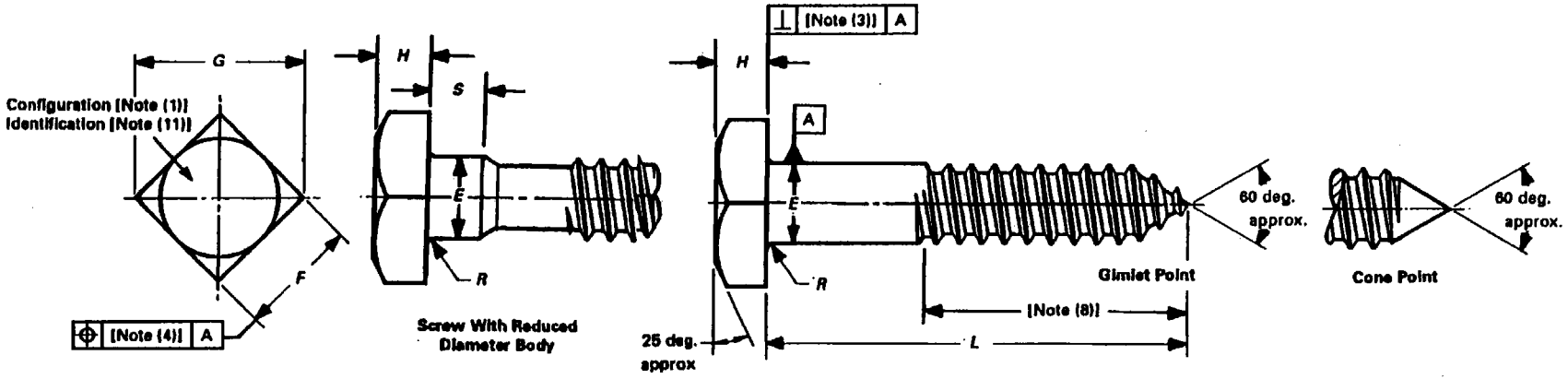


## TABLE 8 DIMENSIONS OF SQUARE LAG SCREWS

| Nominal Size or Basic Product Diameter [Note (12)] | | E | | F | | | G | | H | | | S | R | |
|---|---|---|---|---|---|---|---|---|---|---|---|---|---|---|
| | | Body or Shoulder Diameter [Notes (5), (6)] | | Width Across Flats [Note (2)] | | | Width Across Corners | | Head Height | | | Shoulder Length [Note (6)] | Radius of Fillet | |
| | | Max. | Min. | Basic | Max. | Min. | Max. | Min. | Basic | Max. | Min. | Min. | Max. | Min. |
| No.10 | 0.1900 | 0.199 | 0.178 | 9/32 | 0.281 | 0.271 | 0.398 | 0.372 | 1/8 | 0.140 | 0.110 | 0.094 | 0.03 | 0.01 |
| 1/4 | 0.2500 | 0.260 | 0.237 | 3/8 | 0.375 | 0.362 | 0.530 | 0.498 | 11/64 | 0.188 | 0.156 | 0.094 | 0.03 | 0.01 |
| 5/16 | 0.3125 | 0.324 | 0.298 | 1/2 | 0.500 | 0.484 | 0.707 | 0.665 | 13/64 | 0.220 | 0.186 | 0.125 | 0.03 | 0.01 |
| 3/8 | 0.3750 | 0.388 | 0.360 | 9/16 | 0.562 | 0.544 | 0.795 | 0.747 | 1/4 | 0.268 | 0.232 | 0.125 | 0.03 | 0.01 |
| 7/16 | 0.4375 | 0.452 | 0.421 | 5/8 | 0.625 | 0.603 | 0.884 | 0.828 | 19/64 | 0.316 | 0.278 | 0.156 | 0.03 | 0.01 |
| 1/2 | 0.5000 | 0.515 | 0.482 | 3/4 | 0.750 | 0.725 | 1.061 | 0.995 | 21/64 | 0.348 | 0.308 | 0.156 | 0.03 | 0.01 |
| 5/8 | 0.6250 | 0.642 | 0.605 | 15/16 | 0.938 | 0.906 | 1.326 | 1.244 | 27/64 | 0.444 | 0.400 | 0.312 | 0.06 | 0.02 |
| 3/4 | 0.7500 | 0.768 | 0.729 | 1 1/8 | 1.125 | 1.088 | 1.591 | 1.494 | 1/2 | 0.524 | 0.476 | 0.375 | 0.06 | 0.02 |
| 7/8 | 0.8750 | 0.895 | 0.852 | 1 5/16 | 1.312 | 1.269 | 1.856 | 1.742 | 19/32 | 0.620 | 0.568 | 0.375 | 0.06 | 0.02 |
| 1 | 1.0000 | 1.022 | 0.976 | 1 1/2 | 1.500 | 1.450 | 2.121 | 1.991 | 21/32 | 0.684 | 0.628 | 0.625 | 0.09 | 0.03 |
| 1 1/8 | 1.1250 | 1.149 | 1.098 | 1 11/16 | 1.688 | 1.631 | 2.386 | 2.239 | 3/4 | 0.780 | 0.720 | 0.625 | 0.09 | 0.03 |
| 1 1/4 | 1.2500 | 1.277 | 1.223 | 1 7/8 | 1.875 | 1.812 | 2.652 | 2.489 | 27/32 | 0.876 | 0.812 | 0.625 | 0.09 | 0.03 |

GENERAL NOTE: Notes to Tables 8 and 9 follow Table 9A.





Not for Resale

Copyright ASME International
Provided by IHS under license with ASME
No reproduction or networking permitted without license from IHS



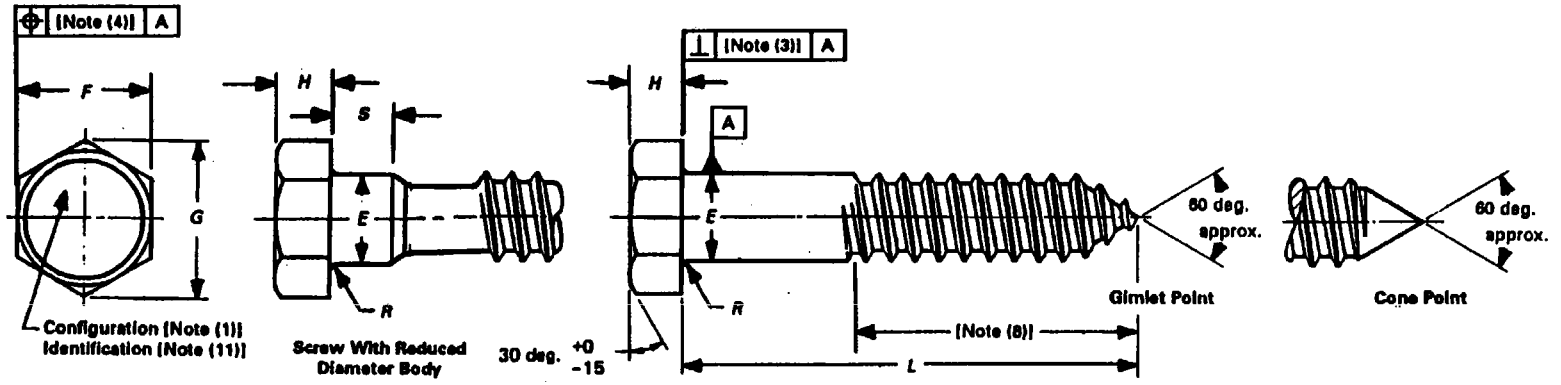


## TABLE 9 DIMENSIONS OF HEX LAG SCREWS

| Nominal Size or Basic Product Diameter [Note (12)] | | E | | F | | | G | | H | | | S | R | |
|---|---|---|---|---|---|---|---|---|---|---|---|---|---|---|
| | | Body or Shoulder Diameter [Notes (5), (6)] | | Width Across Flats [Note (2)] | | | Width Across Corners | | Head Height | | | Shoulder Length [Note (6)] | Radius of Fillet | |
| | | Max. | Min. | Basic | Max. | Min. | Max. | Min. | Basic | Max. | Min. | Min. | Max. | Min. |
| No.10 | 0.1900 | 0.199 | 0.178 | 9/32 | 0.281 | 0.271 | 0.323 | 0.309 | 1/8 | 0.140 | 0.110 | 0.094 | 0.03 | 0.01 |
| 1/4 | 0.2500 | 0.260 | 0.237 | 7/16 | 0.438 | 0.425 | 0.505 | 0.484 | 11/64 | 0.188 | 0.150 | 0.094 | 0.03 | 0.01 |
| 5/16 | 0.3125 | 0.324 | 0.298 | 1/2 | 0.500 | 0.484 | 0.577 | 0.552 | 7/32 | 0.235 | 0.195 | 0.125 | 0.03 | 0.01 |
| 3/8 | 0.3750 | 0.388 | 0.360 | 9/16 | 0.562 | 0.544 | 0.650 | 0.620 | 1/4 | 0.268 | 0.226 | 0.125 | 0.03 | 0.01 |
| 7/16 | 0.4375 | 0.452 | 0.421 | 5/8 | 0.625 | 0.603 | 0.722 | 0.687 | 19/64 | 0.316 | 0.272 | 0.156 | 0.03 | 0.01 |
| 1/2 | 0.5000 | 0.515 | 0.482 | 3/4 | 0.750 | 0.725 | 0.866 | 0.826 | 11/32 | 0.364 | 0.302 | 0.156 | 0.03 | 0.01 |
| 5/8 | 0.6250 | 0.642 | 0.605 | 15/16 | 0.938 | 0.906 | 1.083 | 1.033 | 27/64 | 0.444 | 0.378 | 0.312 | 0.06 | 0.02 |
| 3/4 | 0.7500 | 0.768 | 0.729 | 1 1/8 | 1.125 | 1.088 | 1.299 | 1.240 | 1/2 | 0.524 | 0.455 | 0.375 | 0.06 | 0.02 |
| 7/8 | 0.8750 | 0.895 | 0.852 | 1 5/16 | 1.312 | 1.269 | 1.516 | 1.447 | 37/64 | 0.604 | 0.531 | 0.375 | 0.06 | 0.02 |
| 1 | 1.0000 | 1.022 | 0.976 | 1 1/2 | 1.500 | 1.450 | 1.732 | 1.653 | 43/64 | 0.700 | 0.591 | 0.625 | 0.09 | 0.03 |
| 1 1/8 | 1.1250 | 1.149 | 1.098 | 1 11/16 | 1.688 | 1.631 | 1.949 | 1.859 | 3/4 | 0.780 | 0.658 | 0.625 | 0.09 | 0.03 |
| 1 1/4 | 1.2500 | 1.277 | 1.223 | 1 7/8 | 1.875 | 1.812 | 2.165 | 2.066 | 27/32 | 0.876 | 0.749 | 0.625 | 0.09 | 0.03 |

GENERAL NOTE: Notes to Tables 8 and 9 follow Table 9A.





Not for Resale

## TABLE 9A DIMENSIONS OF LAG SCREW THREADS

| Nominal Size or Basic Product Diameter | | Threads per Inch | P | B | T | $D_1$ |
|---|---|---|---|---|---|---|
| | | | Pitch | Flat at Root | Depth of Thread | Root Diameter |
| No. 10 | 0.1900 | 11 | 0.091 | 0.039 | 0.035 | 0.120 |
| 1/4 | 0.2500 | 10 | 0.100 | 0.043 | 0.039 | 0.173 |
| 5/16 | 0.3125 | 9 | 0.111 | 0.048 | 0.043 | 0.227 |
| 3/8 | 0.3750 | 7 | 0.143 | 0.062 | 0.055 | 0.265 |
| 7/16 | 0.4375 | 7 | 0.143 | 0.062 | 0.055 | 0.328 |
| 1/2 | 0.5000 | 6 | 0.167 | 0.072 | 0.064 | 0.371 |
| 5/8 | 0.6250 | 5 | 0.200 | 0.086 | 0.077 | 0.471 |
| 3/4 | 0.7500 | 4 1/2 | 0.222 | 0.096 | 0.085 | 0.579 |
| 7/8 | 0.8750 | 4 | 0.250 | 0.108 | 0.096 | 0.683 |
| 1 | 1.0000 | 3 1/2 | 0.286 | 0.123 | 0.110 | 0.780 |
| 1 1/8 | 1.1250 | 3 1/4 | 0.308 | 0.133 | 0.119 | 0.887 |
| 1 1/4 | 1.2500 | 3 1/4 | 0.308 | 0.133 | 0.119 | 1.012 |

GENERAL NOTE:
Thread formulas are as follows:
Pitch = 1/No. of threads per inch
Flat at root = pitch × 0.4305
Depth of single thread = pitch × 0.385

**Notes to Tables 8 and 9:**

(1) **Top of Head.** Top of square head shall be full form, but top of hex head may be either full form or indented at the manufacturer's option. The top of head shall be chamfered or rounded. The diameter of the chamfer circle or start of rounding shall be equal to the maximum width across flats within a tolerance of minus 15%.

(2) **Head Taper.** Maximum width across flats shall not be exceeded. No transverse section through the head between 25% and 75% of actual head height, as measured from the bearing surface, shall be less than minimum width across flats.

(3) **Bearing Surface.** A die seam across the bearing surface is permissible. Bearing surface shall be perpendicular to the axis of the body within a tolerance of 3 deg. for 1 in. size and smaller, and 2 deg. for sizes larger than 1 in. Angularity measurement shall be taken at a location to avoid interference from a die seam.

(4) **True Position of Head.** The axis of the head shall be located at true position with respect to the axis of the body (determined over a distance under the head equal to one diameter or the length of the shoulder, whichever is shorter) within a tolerance zone having a diameter equivalent to 6% of the maximum width across flats, regardless of feature size.

(5) **Body Diameter.** Any swell or fin under the head or any die seam on the body shall not exceed the basic screw diameter by the following:

0.030 in. for sizes up to 1/2 in.
0.050 in. for sizes 5/8 and 3/4 in.
0.060 in. for sizes over 3/4 in. to 1 1/4 in.

(6) **Reduced Diameter Body.** Screws may be obtained in reduced diameter body. Where reduced diameter body is specified, the body diameter shall be reduced to the blank diameter before threading and a shoulder of full body diameter under the head shall be provided.

(7) **Length Tolerance.** Screw length tolerances shall be as tabulated below:

| Nominal Screw Size | 1/2 and Smaller | Over 1/2 |
|---|---|---|
| Nominal Screw Length | Tolerance on Length | |
| Through 6 in. | ±0.12 | ±0.25 |
| Over 6 in. | ±0.25 | ±0.25 |

(8) **Thread Length.** The minimum thread length shall be equal to one-half of the nominal screw length plus 0.50 in., or 6.00 in., whichever is shorter. Screws too short for the formula thread length shall be threaded as close to the head or shoulder as practicable.

(9) **Threads.** Threads on lag screws shall conform with Fig. 6 and Table 9A.

(10) **Material.** Chemical and mechanical requirements shall be as agreed upon by manufacturer and purchaser.

(11) **Identification Symbols.** Identification marking symbols on screw heads shall be raised or indented at the manufacturer's option unless otherwise specified.



Copyright ASME International
Provided by IHS under license with ASME
No reproduction or networking permitted without license from IHS
Not for Resale

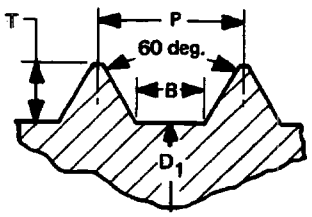


**FIG. 6 DETAIL OF THREADS**

The marking shall be in accordance with the requirements of para. 2.8. Markings shall be legible to the unaided eye with the exception of corrective lenses. When raised, the height of the marking may not exceed 0.015 in. over the specified maximum head height for screws $\frac{5}{8}$ in. and smaller. For screws larger than $\frac{5}{8}$ in., the marking shall not project more than 0.030 in. over the specified maximum head height. When indented, the depth of the marking shall not reduce the load carrying capability of the fastener.

(12) **Nominal Size.** Where specifying nominal size in decimals, zeros preceding the decimal and in the fourth decimal place shall be omitted.

(13) **Dimensional Conformance.** Unless otherwise specified, lag screws shall have the following characteristics inspected to ASME B18.18.2M to the inspection levels shown:

| Characteristic | Inspection Level |
|---|---|
| Screw Length | C |
| Thread Length | C |
| Visual | C |

If verifiable in-process inspection is used, see para. 2.10.

(14) **Additional Requirements.** For additional requirements see Section 1, Introductory Notes, and Section 2, General Data.



Copyright ASME International
Provided by IHS under license with ASME
No reproduction or networking permitted without license from IHS
Not for Resale

## TABLE 10 LENGTH TOLERANCES FOR SQUARE AND HEX BOLTS AND SCREWS[1]

### NON-POINTED PRODUCTS INCLUDING SQUARE, HEX, HEAVY HEX, AND ASKEW HEAD BOLTS

| Nominal Length | Nominal Size | | | | | |
|---|---|---|---|---|---|---|
| | 1/4 to 3/8 | 7/16 and 1/2 | 9/16 to 3/4 | 7/8 and 1 | 1 1/8 to 1 1/2 | Over 1 1/2 |
| Up to 1 in., incl. | +0.02<br>−0.03 | +0.02<br>−0.03 | +0.02<br>−0.03 | . . .<br>. . . | . . .<br>. . . | . . .<br>. . . |
| Over 1 in. to 2 1/2 in., incl. | +0.02<br>−0.04 | +0.04<br>−0.06 | +0.06<br>−0.08 | +0.08<br>−0.10 | +0.12<br>−0.12 | +0.18<br>−0.18. |
| Over 2 1/2 in. to 4 in., incl. | +0.04<br>−0.06 | +0.06<br>−0.08 | +0.08<br>−0.10 | +0.10<br>−0.14 | +0.16<br>−0.16 | +0.20<br>−0.20 |
| Over 4 in. to 6 in., incl. | +0.06<br>−0.10 | +0.08<br>−0.10 | +0.10<br>−0.10 | +0.12<br>−0.16 | +0.18<br>−0.18 | +0.22<br>−0.22 |
| Longer than 6 in. | +0.10<br>−0.18 | +0.12<br>−0.18 | +0.14<br>−0.18 | +0.16<br>−0.20 | +0.22<br>−0.22 | +0.24<br>−0.24 |

### POINTED PRODUCTS INCLUDING HEX CAP SCREWS (FINISHED HEX BOLTS) AND HEAVY HEX SCREWS

| Nominal Length | Nominal Size | | | | | |
|---|---|---|---|---|---|---|
| | 1/4 to 3/8 | 7/16 and 1/2 | 9/16 to 3/4 | 7/8 and 1 | 1 1/8 to 1 1/2 | Over 1 1/2 |
| Up to 1 in., incl. | −0.03 | −0.03 | −0.03 | . . . | . . . | . . . |
| Over 1 in. to 2 1/2 in., incl. | −0.04 | −0.06 | −0.08 | −0.10 | −0.12 | −0.18 |
| Over 2 1/2 in. to 4 in., incl. | −0.06 | −0.08 | −0.10 | −0.14 | −0.16 | −0.20 |
| Over 4 in. to 6 in., incl. | −0.10 | −0.10 | −0.10 | −0.16 | −0.18 | −0.22 |
| Longer than 6 in. | −0.18 | −0.18 | −0.18 | −0.20 | −0.22 | −0.24 |

NOTE:

(1) Length tolerances for lag screws are given in Note (7) to Tables 8 and 9.



Copyright ASME International
Provided by IHS under license with ASME
No reproduction or networking permitted without license from IHS
Not for Resale

# APPENDIX I (a)

DELETED



Copyright ASME International
Provided by IHS under license with ASME
No reproduction or networking permitted without license from IHS Not for Resale

This page intentionally left blank.

--`,,```,,,,````-`-`,,`,,`,`,,`---

Copyright ASME International
Provided by IHS under license with ASME
No reproduction or networking permitted without license from IHS

Not for Resale

# APPENDIX II (a)
# STRAIGHTNESS GAGE AND GAGING

(This Appendix is an integral part of ASME B18.2.1-1996 and is placed after the main text for convenience.)

Allowable total camber on the product to be inspected shall be calculated by multiplying the specified permissible camber per inch or per millimeter of length by the product length expressed as a two-place decimal in inches or a one-place decimal in millimeters. The total camber thus derived shall be added to the specified maximum body diameter exclusive of allowance for swell or fin under head, and the adjustable rail of gage shall be adjusted to provide a parallel space between the rails equal to this distance by obtaining common readings on both micrometer heads. The adjustable rail shall then be locked in place by tightening securing screws.

The product shall then be inserted between rails, excluding from the gage any permissible length of swell or fillet under the head. The product shall be rotated by hand through full 360 deg. Any interference occurring between the product and the gage which is sufficient to prevent rotation indicates excessive camber.

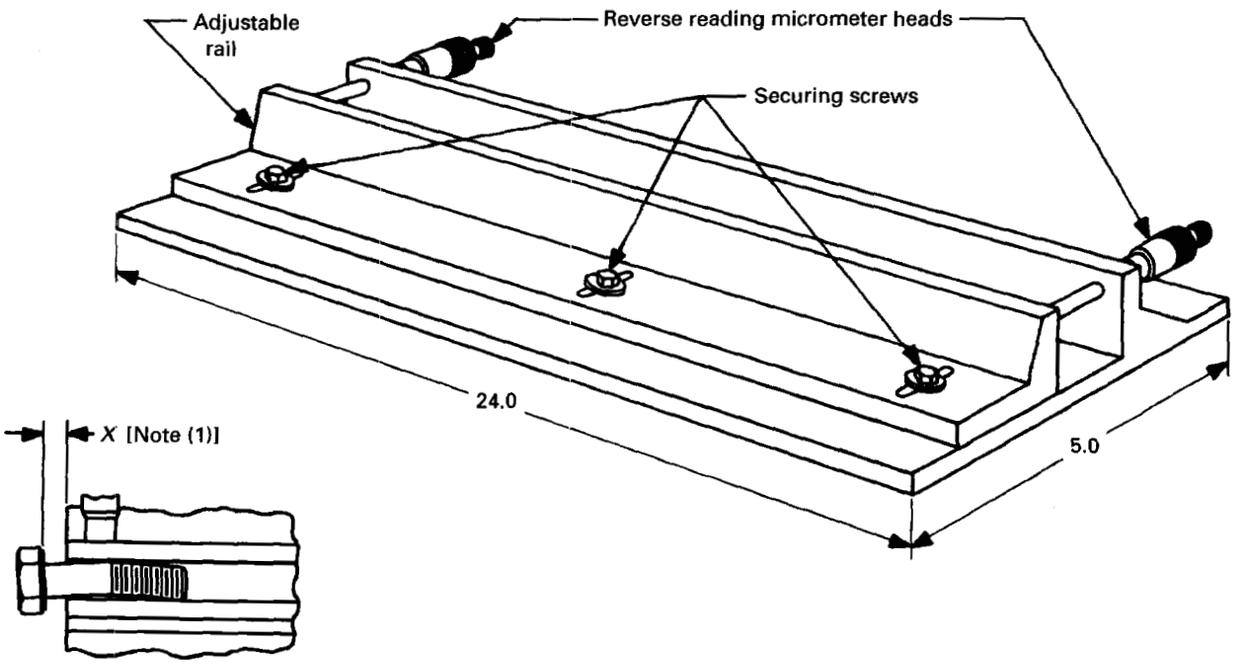


NOTE:
(1) Excluded length $X$ equals 2 times basic bolt diameter.

TYPICAL STRAIGHTNESS GAGE



Copyright ASME International
Provided by IHS under license with ASME
No reproduction or networking permitted without license from IHS
Not for Resale



M4496A

Copyright ASME International
Provided by IHS under license with ASME
No reproduction or networking permitted without license from IHS

Not for Resale

Copyright ASME International
Provided by IHS under license with ASME
No reproduction or networking permitted without license from IHS

# APPENDIX A
# FORMULAS FOR BOLT AND SCREW HEAD DIMENSIONS

(This Appendix is not part of ASME B18.2.1-1996 and is included for information only.)

| Product | Size | Width Across Flats | | Head Height | | Width Across Corners |
|---|---|---|---|---|---|---|
| | | Basic [Note (1)] | Tolerance (Minus) | Basic [Note (2)] | Tolerance (Plus or Minus) | Limits |
| Square Bolt and Square Lag Screw | No. 10 | $F = 1.5000\ D - 0.004$ | $0.050\ D$ | $H = 0.667\ D$ | $0.016\ D + 0.012$ | Max. $G = 1.4142$ (Max. $F$) |
| | 1/4–1 1/2 | $F = 1.500\ D$ | $0.050\ D$ | $H = 0.667\ D$ | $0.016\ D + 0.012$ | Min. $G = 1.373$ (Min. $F$) |
| Hex Bolt and Hex Lag Screw | 1/4 | $F = 1.500\ D + 0.062$ | $0.050\ D$ | $H = 0.625\ D + 0.016$ | $0.016\ D + 0.012$ [Note (3)] | Max. $G = 1.1547$ (Max. $F$) |
| | 5/16–7/16 | $F = 1.500\ D$ | $0.050\ D$ | $H = 0.625\ D + 0.016$ | $0.016\ D + 0.012$ [Note (3)] | Min. $G = 1.14$ (Min. $F$) |
| | 1/2–7/8 | $F = 1.500\ D$ | $0.050\ D$ | $H = 0.625\ D + 0.031$ | $0.016\ D + 0.012$ [Note (3)] | |
| | 1–1 7/8 | $F = 1.500\ D$ | $0.050\ D$ | $H = 0.625\ D + 0.062$ | $0.016\ D + 0.012$ [Note (3)] | |
| | 2–3 3/4 | $F = 1.500\ D$ | $0.050\ D$ | $H = 0.625\ D + 0.125$ | $0.016\ D + 0.012$ [Note (3)] | |
| | 4 | $F = 1.500\ D$ | $0.050\ D$ | $H = 0.625\ D + 0.188$ | $0.016\ D + 0.012$ [Note (3)] | |
| Hex Cap Screw | 1/4 | $F = 1.500\ D + 0.062$ | $0.015\ D + 0.006$ | $H = 0.625\ D$ | $0.015\ D + 0.003$ | Max. $G = 1.1547$ (Max. $F$) |
| | 5/16–5/8 | $F = 1.500\ D$ | $0.015\ D + 0.006$ | $H = 0.625\ D$ | $0.015\ D + 0.003$ | Min. $G = 1.14$ (Min. $F$) |
| | 3/4–7/8 | $F = 1.500\ D$ | $0.025\ D + 0.006$ | $H = 0.625\ D$ | $0.015\ D + 0.003$ | |
| | 1 | $F = 1.500\ D$ | $0.025\ D + 0.006$ | $H = 0.625\ D - 0.016$ | $0.015\ D + 0.003$ | |
| | 1 1/8–1 7/8 | $F = 1.500\ D$ | $0.050\ D$ | $H = 0.625\ D - 0.016$ | $0.016\ D + 0.012$ | |
| | 2–2 3/4 | $F = 1.500\ D$ | $0.050\ D$ | $H = 0.625\ D - 0.031$ | $0.016\ D + 0.012$ | |
| | 3 | $F = 1.500\ D$ | $0.050\ D$ | $H = 0.625\ D$ | $0.016\ D + 0.012$ | |
| Heavy Hex Bolt | 1/2–3 | $F = 1.500\ D + 0.125$ | $0.050\ D$ | Same as for Hex Bolt [Note (4)] | Same as for Hex Bolt [Note (4)] | Max. $G = 1.1547$ (Max. $F$) Min. $G = 1.14$ (Min. $F$) |
| Heavy Hex Screw | 1/2–3 | $F = 1.500\ D + 0.125$ | $0.050\ D$ | Same as for Hex Cap Screw [Note (5)] | Same as for Hex Cap Screw [Note (5)] | Max. $G = 1.1547$ (Max. $F$) Min. $G = 1.14$ (Min. $F$) |

NOTES:

(1) Adjusted to sixteenths.

(2) Size to 1 in. adjusted to sixty-fourths. 1 1/8 through 2 1/2 in. sizes adjusted upward to thirty-seconds. 2 3/4 thru 4 in. sizes adjusted upward to sixteenths.

(3) Plus tolerance only. Minus tolerance adjusted so that minimum head height is equal to minimum head height of corresponding Hex Cap Screw. For sizes 3 1/4 through 4 in. minimum head height is equal to $0.625\ D - (0.016\ D + 0.012)$.

(4) In 1960, head heights for heavy hex bolts were reduced. Prior to 1960, head heights were $0.750\ D + 0.062$ in. Plus tolerance was $0.016\ D + 0.012$ in. Minus tolerance was adjusted so that minimum head height was same as minimum head height of heavy hex screw.

(5) In 1960, head heights for heavy hex screws were reduced. Prior to 1960, head heights were $0.750\ D + 0.31$ in. for sizes 1/2 through 7/8 in.; $0.750\ D$ for sizes 1 through 1 7/8 in.; and $0.750\ D - 0.062$ in. for sizes 2 through 3 in. Tolerance on head height for all sizes was plus and minus $0.016\ D + 0.012$ in.

where: $D$ = Basic (nominal) bolt or screw diameter.
$F$ = Width across flats.
$G$ = Width across corners.



Not for Resale

This page intentionally left blank.

Copyright ASME International
Provided by IHS under license with ASME
No reproduction or networking permitted without license from IHS
Not for Resale

# APPENDIX B
# SPECIFICATIONS FOR IDENTIFICATION OF BOLTS AND SCREWS

(This Appendix is not part of ASME B18.2.1-1996 and is included for information only.)

## B1 SCOPE

This Specification establishes a recommended procedure for determining the identity of an externally threaded fastener as a bolt or as a screw.

## B2 DEFINITIONS

### B2.1 Bolt

A bolt is an externally threaded fastener designed for insertion through holes in assembled parts, and is normally intended to be tightened or released by torquing a nut.

### B2.2 Screw

A screw is an externally threaded fastener capable of being inserted into holes in assembled parts, of mating with a preformed internal thread or forming its own thread, and of being tightened or released by torquing the head.

## B3 EXPLANATORY DATA

A bolt is designed for assembly with a nut. A screw has features in its design which make it capable of being used in a tapped or other preformed hole in the work. Because of basic design, it is possible to use certain types of screws in combination with a nut. Any externally threaded fastener which has a majority of the design characteristics which assist its proper use in a tapped or other preformed hole is a screw, regardless of how it is used in its service application.

## B4 PROCEDURE

To identify an externally threaded fastener as a bolt or as a screw, two sets of criteria — Primary and Supplementary — shall be applied. The Primary Criteria (paras. B5.1 through B5.4) shall be applied first. Any fastener which satisfies one of the Primary Criteria shall be identified accordingly, and no further examination need be made. The Supplementary Criteria (paras. B6.1 through B6.9, and not listed in order of importance or priority of application) shall be applied to a fastener which does not satisfy completely any one of the Primary Criteria. The Supplementary Criteria detail the principal features in the design of an externally threaded fastener which contribute to its proper use as a screw. A fastener having a majority of these characteristics shall be identified as a screw.

## B5 PRIMARY CRITERIA

**B5.1** An externally threaded fastener which, because of head design or other feature, is prevented from being turned during assembly, and which can be tightened or released only by torquing a nut, is a bolt. (Example: round head bolts, track bolts, plow bolts.)

**B5.2** An externally threaded fastener which has a thread form which prohibits assembly with a nut having a straight thread of multiple pitch length, is a screw. (Example: wood screws, tapping screws.)

**B5.3** An externally threaded fastener, which must be assembled with a nut to perform its intended service, is a bolt. (Example: heavy hex structural bolt.)

**B5.4** An externally threaded fastener, which must be torqued by its head into a tapped or other preformed hole to perform its intended service is a screw. (Example: square head set screw.)

## B6 SUPPLEMENTARY CRITERIA

### B6.1 Under Head Fillet

A screw should have a controlled fillet at the junction of the head with the body. Because of the severe combined torsion and tension stresses at this junction when



Copyright ASME International
Provided by IHS under license with ASME
No reproduction or networking permitted without license from IHS
Not for Resale

torquing the head, the minimum limits of the fillet radius should be specified. Because the screw must be capable of being turned through a minimum clearance hole and into an immovable tapped hole, the maximum limits of the fillet radius should be specified to assure solid seating of the head, and to prevent interference at the top of the hole with the junction of head to body.

### B6.2 Bearing Surface

The under-head bearing surface of a screw should be smooth and flat to minimize frictional resistance during tightening, to prevent scoring of the surface against which the head is turned, and to produce uniform clamping loads.

### B6.3 Perpendicularity of Bearing Surface

The angularity (squareness) of the under-head bearing surface with the shank of a screw should be controlled to minimize eccentric loading in the screw or assembled parts, and to assure complete seating and uniform under-head bearing pressure.

### B6.4 Body

The body of a screw should be closely controlled in accuracy of size and roundness. To fit effectively through a minimum clearance hole, the body diameter must have close tolerances, preferably unilateral on the minus side.

### B6.5 Shank Straightness

The shank of a screw should be straight to permit ready engagement with the internal thread, to prevent eccentric loading in the fastener or in the assembled parts, and to minimize interference with the walls of a minimum clearance hole.

### B6.6 Thread Concentricity

The threads of a screw should be concentric with the body axis within close limits to permit assembly into a tapped hole (which usually has a length of thread engagement longer than a nut) without binding of the body against the walls of a minimum clearance hole.

### B6.7 Thread Length

The length of thread on a screw must be sufficient to develop the full strength of the fastener in tapped holes in various materials.

### B6.8 Point

A screw should have a chamfered, or other specially prepared point at its end to facilitate entry into the hole and easy start with the internal thread, which may be distant from the top of the hole. The point also protects the first thread, which, if damaged, may gall or scar the internal thread throughout its entire length.

### B6.9 Length

The length of a screw should be closely toleranced, with variance preferably unilateral on the minus side to prevent bottoming of the fastener in a tapped hole.



Copyright ASME International
Provided by IHS under license with ASME
No reproduction or networking permitted without license from IHS
Not for Resale

# APPENDIX C
# WEIGHT IN POUNDS OF 100 HEX CAP SCREWS FOR GIVEN DIAMETER/LENGTH COMBINATION

(This Appendix is not part of ASME B18.2.1-1996 and is included for information only.)

| Lengths, Multiple of Diameter | Diameter | | | |
|---|---|---|---|---|
| | 1/4 | 1/2 | 3/4 | 1 |
| 3*D* | 1.44 | 11.59 | 38.23 | 90.96 |
| 4*D* | 1.74 | 14.35 | 47.56 | 113.04 |
| 5*D* | 2.08 | 17.11 | 56.89 | 135.12 |
| 6*D* | 2.43 | 19.87 | 66.22 | 157.20 |
| 7*D* | 2.77 | 22.63 | 75.55 | 179.30 |
| 8*D* | 3.12 | 25.39 | 84.88 | 201.3 |



Copyright ASME International
Provided by IHS under license with ASME
No reproduction or networking permitted without license from IHS
Not for Resale

This page intentionally left blank.

--`,,```,,,,````-`-`,,`,,`,`,,`---
Copyright ASME International
Provided by IHS under license with ASME
No reproduction or networking permitted without license from IHS
Not for Resale

# APPENDIX D
# COUNTERSUNK CENTER HOLES

(This Appendix is not part of ASME B18.2.1-1996 and is included for information only.)

Plain or bell-type 60 deg. combined drills and countersinks may be used to produce countersunk center holes in the points for support of long parts under the provisions of para. 2.12 (see ASME B94.11M-1993).

## MAXIMUM ALLOWABLE COUNTERSUNK CENTER HOLE SIZE BY DRILL DESIGNATION NUMBER FOR VARIOUS BASIC BOLT OR SCREW DIAMETERS

| | Plain-Type Number | | | | | | | | Bell-Type Number | | | | | | | |
|---|---|---|---|---|---|---|---|---|---|---|---|---|---|---|---|---|
| **Bolt or Screw Dia.** | **1** | **2** | **3** | **4** | **5** | **6** | **7** | **8** | **11** | **12** | **13** | **14** | **15** | **16** | **17** | **18** |
| 3/16 through 3/8 | X | | | | | | | | X | | | | | | | |
| Over 3/8 through 5/8 | | X | | | | | | | | X | | | | | | |
| Over 5/8 through 7/8 | | | X | | | | | | | | X | | | | | |
| Over 7/8 through 1 3/8 | | | | X | | | | | | | | X | | | | |
| Over 1 3/8 through 2 | | | | | X | | | | | | | | X | | | |
| Over 2 through 3 | | | | | | X | | | | | | | | X | | |
| Over 3 through 5 | | | | | | | X | | | | | | | | X | |
| Over 5 through 8 | | | | | | | | X | | | | | | | | X |

## MAXIMUM ALLOWABLE CENTER HOLE DEPTH

| Drill Size | Depth, Max. |
|---|---|
| 1 | 0.101 |
| 2 | 0.149 |
| 3 | 0.250 |
| 4 | 0.297 |
| 5 | 0.422 |
| 6 | 0.485 |
| 7 | 0.594 |
| 8 | 0.704 |
| [Notes (1), (2)] | . . . |

NOTES:
(1) Based on included angle of 60 deg. Larger angles are not recommended.
(2) Drill length tolerances of +0.008 in. through #2 and +0.016 in. for sizes #3 through #8.



Copyright ASME International
Provided by IHS under license with ASME
No reproduction or networking permitted without license from IHS
Not for Resale

This page intentionally left blank.

Copyright ASME International
Provided by IHS under license with ASME
No reproduction or networking permitted without license from IHS
Not for Resale

# APPENDIX E
# GOVERNMENT STANDARD ITEMS AND PART IDENTIFYING NUMBERING SYSTEM (PIN CODE) FOR SCREW, CAP, HEXAGON HEAD
## (See ASME B18.2.1, Table 4 Data)

(This Appendix is not part of ASME B18.2.1-1996 and is included for information only.)

NOTE: The Government encourages the general use of this Appendix to achieve maximum parts standardization.

This Appendix, together with ASME B18.2.1, Table 4 data, establishes the standard items for Government application, selected from the possible variations of items within the scope of the Standard, and provides a part numbering system for identification and application in engineering documents for screws, cap, hexagon head, inch-pound products.

(*a*) *Variations.* The following variations shall be standard:

(*1*) document identifier: ASME standard number less decimal points;

(*2*) diameter/thread designation and length combinations: as specified in Table E1.

(*3*) material/performance: alloy steel, Grade 8 — as coded in Part Identifying Numbering System;

(*4*) finish: cadmium plating or zinc coating — as coded in Part Identifying Numbering System;

(*5*) fastener configuration: hexagon head cap screw code;

(*6*) thread designation: as coded in Part Identifying Numbering System;

(*7*) special features:

(*a*) none;

(*b*) drilled head, self-locking or drilled head, and self-locking as coded in Part Identifying Numbering System.

NOTE: The Part Numbering System may also be used for nonstandard diameter/threads per inch and length combinations.

(*b*) *Requirements*

(*1*) *Self-Locking Element.* Self-locking element requirements shall be in accordance with Table E1 and the following for the nominal size shown:

(*a*) the self-locking element shall be a patch type or longitudinal strip in accordance with MIL-F-18240;

(*b*) for X and Y dimensions and design and usage limitations, see MS15981;

(*c*) maximum ring gage diameter that locking region of screw must pass through freely or with finger pressure shall be the nominal size plus 0.010.

(*2*) *Drilled Head.* Drilled head requirements shall be in accordance with Table E1 for the nominal size shown.

(*3*) *Identification Marking*

(*a*) *Grade Symbol.* Heads shall be marked to identify chemical and mechanical properties in accordance with the specified material specification. In addition, screws with self-locking elements shall be marked with six dots in a circular pattern on the head.

(*b*) *Source Symbol.* The source accepting responsibility for the conformance of the screw to this specification shall be marked on the head in accordance with identifying symbols of MIL-HDBK-57.

(*4*) *Quality Assurance Provisions.* Quality assurance provisions shall be in accordance with ASME B18.18.2M. Inspection level B shall apply for thread acceptability.

(*5*) *Packaging.* Packaging shall be in accordance with ASTM D 3951 and cite the country of origin.



Copyright ASME International
Provided by IHS under license with ASME
No reproduction or networking permitted without license from IHS
Not for Resale

This page intentionally left blank.

--`,,```,,,,````-`-`,,`,,`,`,,`---

Copyright ASME International
Provided by IHS under license with ASME
No reproduction or networking permitted without license from IHS

Not for Resale

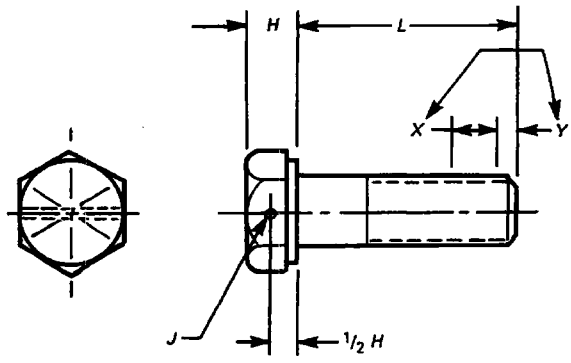


| Nominal Size | Head Height, *H* | | 1/2, *H* | | Hole Diameter, *J* +0.006, −0.002 |
|---|---|---|---|---|---|
| | Max. | Min. | Max. | Min. | |
| 1/4 | 0.163 | 0.150 | 0.088 | 0.075 | 0.0625 |
| 5/16 | 0.211 | 0.195 | 0.114 | 0.098 | 0.0625 |
| 3/8 | 0.243 | 0.226 | 0.130 | 0.113 | 0.0625 |
| 7/16 | 0.291 | 0.272 | 0.155 | 0.136 | 0.0625 |
| 1/2 | 0.323 | 0.302 | 0.172 | 0.151 | 0.094 |
| 5/8 | 0.403 | 0.378 | 0.214 | 0.189 | 0.094 |
| 3/4 | 0.483 | 0.455 | 0.256 | 0.228 | 0.094 |
| 7/8 | 0.563 | 0.531 | 0.298 | 0.266 | 0.125 |
| 1 | 0.627 | 0.591 | 0.332 | 0.296 | 0.125 |

**TABLE E1 SELF-LOCKING ELEMENT AND DRILLED HEAD DIMENSIONS**



Copyright ASME International
Provided by IHS under license with ASME
No reproduction or networking permitted without license from IHS
Not for Resale

This page intentionally left blank.

Copyright ASME International
Provided by IHS under license with ASME
No reproduction or networking permitted without license from IHS
Not for Resale

Copyright ASME International
Provided by IHS under license with ASME
No reproduction or networking permitted without license from IHS

## PART NUMBERING SYSTEM COVERING STANDARD ITEMS FOR GOVERNMENT USE

NOTE: THE GOVERNMENT ENCOURAGES THE GENERAL USE OF THIS SYSTEM TO ACHIEVE MAXIMUM PARTS STANDARDIZATION.

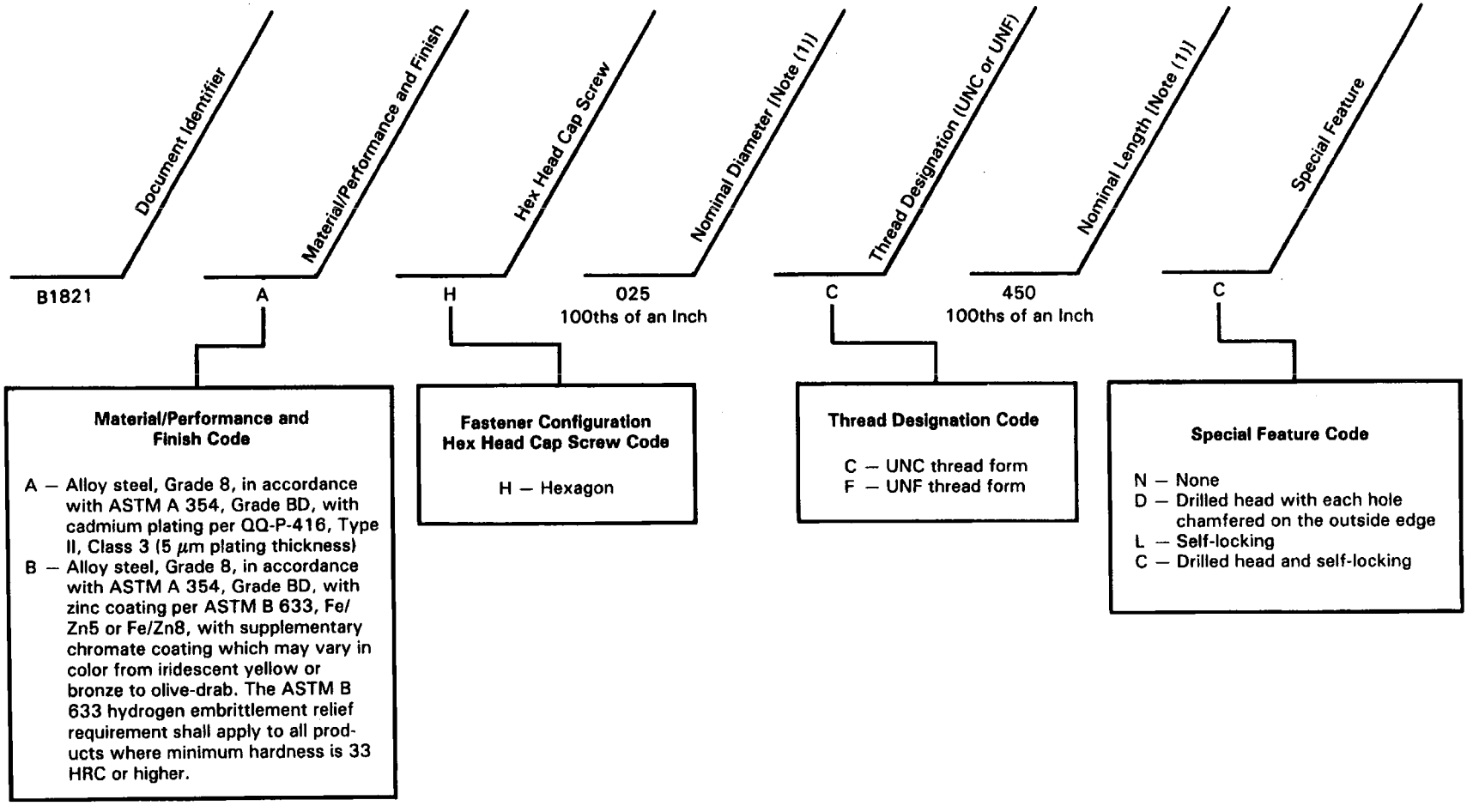


EXAMPLE: B1821AH025C450C indicates a screw, cap, hexagon head, made of alloy steel, Grade 8, cadmium plated, 0.250-20 UNC-2A (diameter/threads per inch) UNC Class 2A threads, 4.50 in. in length, with drilled head and self-locking feature.

NOTE:

(1) Round off third number to next higher number if fourth number is five (5) or greater.



Not for Resale

This page intentionally left blank.

Copyright ASME International
Provided by IHS under license with ASME
No reproduction or networking permitted without license from IHS
Not for Resale

Copyright ASME International
Provided by IHS under license with ASME
No reproduction or networking permitted without license from IHS

# INCH HEXAGON HEAD CAP SCREWS — STANDARD SIZES FOR GOVERNMENT USE

| Nominal Screw Length | Nominal Screw Diameter | | | | | | | | | | | | | | | | | |
|---|---|---|---|---|---|---|---|---|---|---|---|---|---|---|---|---|---|---|
| | 0.2500 | 0.3125 | 0.3750 | 0.4375 | 0.5000 | 0.5625 | 0.6250 | 0.7500 | 0.8750 | 1.000 | 1.1250 | 1.250 | 1.375 | 1.500 | 1.750 | 2.000 | 2.250 | 2.500 |
| 0.375 | X | X | X | | | | | | | | | | | | | | | |
| 0.437 | | | | X | | | | | | | | | | | | | | |
| 0.500 | | | | | X | | | | | | | | | | | | | |
| 0.562 | | | | | | X | | | | | | | | | | | | |
| 0.625 | | | | | | | X | | | | | | | | | | | |
| 0.750 | | | | | | | | X | | | | | | | | | | |
| 0.875 | | | | | | | | | X | | | | | | | | | |
| 1.000 | | | | | | | | | | X | | | | | | | | |
| 1.125 | | | | | | | | | | | X | | | | | | | |
| 1.250 | | | | | | | | | | | | X | | | | | | |
| 1.375 | | | | | | | | | | | | | X | | | | | |
| 1.500 | | | | | | | | | | | | | | X | | | | |
| 1.750 | | | | | | | | | | | | | | | X | | | |
| 2.000 | | | | | | | | | | | | | | | | X | | |
| 2.250 | | | | | | | | | | | | | | | | | | |
| 2.500 | | | | | | | | | | | | | | | | | X | X |
| 2.750 | | | | | | | | | | | | | | | | | | |
| 3.000 | | | | | | | | | | | | | | | | | | |
| 3.250 | | | | | | | | | | | | | | | | | | |
| 3.500 | | | | | | | | | | | | | | | | | | |
| 3.750 | | | | | | | | | | | | | | | | | | |
| 4.000 | | | | | | | | | | | | | | | | | | |
| 4.250 | | | | | | | | | | | | | | | | | | |
| 4.500 | | | | | | | | | | | | | | | | | | |
| 4.750 | | | | | | | | | | | | | | | | | | |
| 5.000 | X | X | X | X | | | | | | | | | | | | | | |
| 5.500 | | | | | | | | | | | | | | | | | | |
| 6.000 | | | | | X | X | X | X | X | X | X | X | X | X | X | X | X | X |
| **Thread Designation (Threads/in.)** | | | | | | | | | | | | | | | | | | |
| UNC-2A | 20 | 18 | 16 | 14 | 13 | 12 | 11 | 10 | 9 | 8 | 7 | 7 | 6 | 6 | 5 | 4½ | 4½ | 4 |
| UNF-2A | 28 | 24 | 24 | 20 | 20 | 18 | 18 | 16 | 14 | 12 | 12 | 12 | 12 | 12 | ... | ... | ... | ... |

STANDARD DIAMETER AND LENGTH COMBINATION



Not for Resale

This page intentionally left blank.

--`,,```,,,,````-`-`,,`,,`,`,,`---

Copyright ASME International
Provided by IHS under license with ASME
No reproduction or networking permitted without license from IHS

Not for Resale

# AMERICAN NATIONAL STANDARDS FOR BOLTS, NUTS, RIVETS, SCREWS, WASHERS, AND SIMILAR FASTENERS


Small Solid Rivets ..... B18.1.1-1972(R1995)
Large Rivets ..... B18.1.2-1972(R1995)
Metric Small Solid Rivets ..... B18.1.3M-1983(R1995)
Square and Hex Bolts and Screws (Inch Series) ..... B18.2.1-1996
Square and Hex Nuts (Inch Series) ..... B18.2.2-1987(R1993)
Metric Hex Cap Screws ..... B18.2.3.1M-1979(R1995)
Metric Formed Hex Screws ..... B18.2.3.2M-1979(R1995)
Metric Heavy Hex Screws ..... B18.2.3.3M-1979(R1995)
Metric Hex Flange Screws ..... B18.2.3.4M-1984(R1995)
Metric Hex Bolts ..... B18.2.3.5M-1979(R1995)
Metric Heavy Hex Bolts ..... B18.2.3.6M-1979(R1995)
Metric Heavy Hex Structural Bolts ..... B18.2.3.7M-1979(R1995)
Metric Hex Lag Screws ..... B18.2.3.8M-1981(R1991)
Metric Heavy Hex Flange Screws ..... B18.2.3.9M-1984(R1995)
Square Head Bolts (Metric Series) ..... B18.2.3.10M-1996
Metric Hex Nuts, Style 1 ..... B18.2.4.1M-1996
Metric Hex Nuts, Style 2 ..... B18.2.4.2M-1979(R1995)
Metric Slotted Hex Nuts ..... B18.2.4.3M-1979(R1995)
Metric Hex Flange Nuts ..... B18.4.4.4M-1982(R1993)
Metric Hex Jam Nuts ..... B18.2.4.5M-1979(R1990)
Metric Heavy Hex Nuts ..... B18.2.4.6M-1979(R1990)
Fasteners for Use in Structural Applications ..... B18.2.6-1996
Socket Cap, Shoulder and Set Screws — Inch Series ..... B18.3-1986(R1995)
Socket Head Cap Screws (Metric Series) ..... B18.3.1M-1986(R1993)
Metric Series Hexagon Keys and Bits ..... B18.3.2M-1979(R1990)
Hexagon Socket Head Shoulder Screws (Metric Series) ..... B18.3.3M-1986(R1993)
Hexagon Socket Button Head Cap Screws (Metric Series) ..... B18.3.4M-1986(R1993)
Hexagon Socket Flat Countersunk Head Cap Screws (Metric Series) ..... B18.3.5M-1986(R1993)
Metric Series Socket Set Screws ..... B18.3.6M-1986(R1993)
Round Head Bolts (Inch Series) ..... B18.5-1990
Metric Round Head Short Square Neck Bolts ..... B18.5.2.1M-1996
Metric Round Head Square Neck Bolts ..... B18.5.2.2M-1982
Round Head Square Neck Bolts With Large Head (Metric Series) ..... B18.5.2.3M-1990
Wood Screws (Inch Series) ..... B18.6.1-1981(R1991)
Slotted Head Cap Screws, Square Head Set Screws, and Slotted Headless Set Screws ..... B18.6.2-1972(R1993)
Machine Screws and Machine Screw Nuts ..... B18.6.3-1972(R1983)
Thread Forming and Thread Cutting Tapping Screws and Metallic Drive Screws (Inch Series) ..... B18.6.4-1981(R1991)
Metric Thread Forming and Thread Cutting Tapping Screws ..... B18.6.5M-1986(R1993)
Metric Machine Screws ..... B18.6.7M-1985(R1993)
General Purpose Semi-Tubular Rivets, Full Tubular Rivets, Split Rivets and Rivet Caps ..... B18.7-1972(R1992)
Metric General Purpose Semi-Tubular Rivets ..... B18.7.1M-1984(R1992)
Clevis Pins and Cotter Pins (Inch Series) ..... B18.8.1-1994
Taper Pins, Dowel Pins, Straight Pins, Grooved Pins, and Spring Pins (Inch Series) ..... B18.8.2-1995
Spring Pins — Coiled Type (Metric Series) ..... B18.8.3M-1995
Spring Pins — Slotted (Metric Series) ..... B18.8.4M-1994
Machine Dowel Pins — Hardened Ground (Metric Series) ..... B18.8.5M-1994
Cotter Pins (Metric Series) ..... B18.8.6M-1995
Headless Clevis Pins (Metric Series) ..... B18.8.7M-1994
Headed Clevis Pins (Metric Series) ..... B18.8.8M-1994
Plow Bolts (Inch Series) ..... B18.9-1996
Track Bolts and Nuts ..... B18.10-1982(R1992)
Miniature Screws ..... B18.11-1961(R1992)
Glossary of Terms for Mechanical Fasteners ..... B18.12-1962(R1991)
Screw and Washer Assemblies — Sems (Inch Series) ..... B18.13-1987(R1993)
Screw and Washer Assemblies — Sems (Metric Series) ..... B18.13.1M-1991
Forged Eyebolts ..... B18.15-1985(R1995)
Mechanical and Performance Requirements for Prevailing-Torque Type Steel Metric Hex Nuts and Hex Flange Nuts ..... B18.16.1M-1979(R1995)
Torque-Tension Test Requirements for Prevailing-Torque Type Steel Metric Hex Nuts and Hex Flange Nuts ..... B18.16.2M-1979(R1995)



Copyright ASME International
Provided by IHS under license with ASME
No reproduction or networking permitted without license from IHS
Not for Resale

Dimensional Requirements for Prevailing-Torque Type Steel
Metric Hex Nuts and Hex Flange Nuts ..... B18.16.3M-1982(R1993)
Wing Nuts, Thumb Screws, and Wing Screws ..... B18.17-1968(R1983)
Inspection and Quality Assurance for General Purpose Fasteners ..... B18.18.1M-1987(R1993)
Inspection and Quality Assurance for High-Volume Machine Assembly Fasteners ..... B18.18.2M-1987(R1993)
Inspection and Quality Assurance for Special Purpose Fasteners ..... B18.18.3M-1987(R1993)
Inspection and Quality Assurance for Fasteners for Highly Specialized
Engineered Applications ..... B18.18.4M-1987(R1993)
Lock Washers (Inch Series) ..... B18.21.1-1994
Lock Washers (Metric Series) ..... B18.21.2M-1994
Metric Plain Washers ..... B18.22M-1981(R1990)
Plain Washers ..... B18.22.1-1965(R1990)
Part Identifying Number (Pin) Code System Standard for B18 Externally
Threaded Products ..... B18.24.1-1996
Square and Rectangular Keys and Keyways ..... B18.25.1M-1996
Woodruff Keys and Keyways ..... B18.25.2M-1996
Helical Coil Screw Thread Inserts (Inch Series) ..... B18.29.1-1993

*The ASME Publications Catalog shows a complete list of all the Standards published by the Society. For a complimentary catalog, or the latest information about our publications, call 1-800-THE-ASME (1-800-843-2763).*

Copyright ASME International
Provided by IHS under license with ASME
No reproduction or networking permitted without license from IHS
Not for Resale

# Replaced Pages

**The following are pages contained in the original edition, which have been replaced by subsequent changes made in addenda. They are included here for reference.**

Copyright ASME International
Provided by IHS under license with ASME
No reproduction or networking permitted without license from IHS
Not for Resale

This page intentionally left blank.

--`,,```,,,,````-`-`,,`,,`,`,,`---

Copyright ASME International
Provided by IHS under license with ASME
No reproduction or networking permitted without license from IHS

Not for Resale

# CONTENTS


Foreword ..... iii
Standards Committee Roster ..... vii

**1 Introductory Notes** ..... 1
**2 General Data** ..... 2

**Figures**

1 Underhead Fillet for Long Screws ..... 16
2 Underhead Fillet for Short Screws Threaded Full Length ..... 17
3 $L_G$, Maximum and $L_B$, Minimum for Short Screws Threaded Full Length ..... 17
4 Underhead Fillet for Long Screws ..... 23
5 Underhead Fillet for Short Screws Threaded Full Length ..... 23

**Tables**

1 Dimensions of Square Bolts ..... 4
2 Dimensions of Hex Bolts ..... 7
3 Dimensions of Heavy Hex Bolts ..... 10
4 Dimensions of Hex Cap Screws ..... 13
4A Dimensions of Underhead Fillets ..... 14
4B $L_G$, Maximum and $L_B$, Minimum Limitations for Short Screws Threaded Full Length ..... 15
5 Maximum Grip Gaging Lengths, $L_G$, and Minimum Body Lengths, $L_B$, for Hex Cap Screws and Heavy Hex Screws Nominal Size ..... 19
6 Dimensions of Heavy Hex Screws ..... 20
6A Dimensions of Underhead Fillets ..... 21
6B $L_G$, Maximum and $L_B$, Minimum Limitations for Short Screws Threaded Full Length ..... 22
7 Dimensions of Askew Head Bolts ..... 26
8 Dimensions of Square Lag Screws ..... 28
9 Dimensions of Hex Lag Screws ..... 29
9A Dimensions of Lag Screw Threads ..... 30
10 Length Tolerances for Square and Hex Bolts and Screws ..... 32

**Appendices**

I Shank Position and Straightness Sleeve Gages and Gaging ..... 33
II Straightness Gage and Gaging ..... 35
A Formulas for Bolt and Screw Head Dimensions ..... 37
B Specifications for Identification of Bolts and Screws ..... 39
C Weight in Pounds of 100 Hex Cap Screws for Given Diameter/Length Combination ..... 41
D Countersunk Center Holes ..... 43
E Government Standard Items and Part Identifying Numbering System (PIN Code) for Screw, Cap, Hexagon Head ..... 45




Copyright ASME International
Provided by IHS under license with ASME
No reproduction or networking permitted without license from IHS
Not for Resale

This page intentionally left blank.

Copyright ASME International
Provided by IHS under license with ASME
No reproduction or networking permitted without license from IHS
Not for Resale

manufacturer's option unless otherwise specified. The marking shall be in accordance with the requirements of para. 2.8. Markings shall be legible to the unaided eye with the exception of corrective lenses. When raised, the height of the marking may not exceed 0.015 in. over the specified maximum head height for bolts 5/8 in. and smaller. For bolts larger than 5/8 in., the marking may not project more than 0.030 in. over the specified maximum head height. When indented, the depth of the marking shall not reduce the load-carrying capability of the fastener.

(15) **Material.** Unless otherwise specified, chemical and mechanical properties of steel bolts shall conform to ASTM A 307, Grade A. Other materials and grades shall be as agreed upon by manufacturer and purchaser.

(16) **Nominal Size.** Where specifying nominal size in decimals, zeros preceding the decimal and in the fourth decimal place shall be omitted.

(17) **Dimensional Conformance.** Unless otherwise specified, hex bolts shall have the following characteristics inspected to ASME B18.18.2M to the inspection levels shown:

| Characteristic | Inspection Level |
|---|---|
| Threads | C |
| Width across corners | C |
| Head height | C |
| Grip length | C |
| Visual | C |

If verifiable in-process inspection is used, see para. 2.10.

(18) **Additional Requirements.** For additional requirements, see Section 1, Introductory Notes, and Section 2, General Data.



Copyright ASME International
Provided by IHS under license with ASME
No reproduction or networking permitted without license from IHS Not for Resale

Copyright ASME International
Provided by IHS under license with ASME
No reproduction or networking permitted without license from IHS



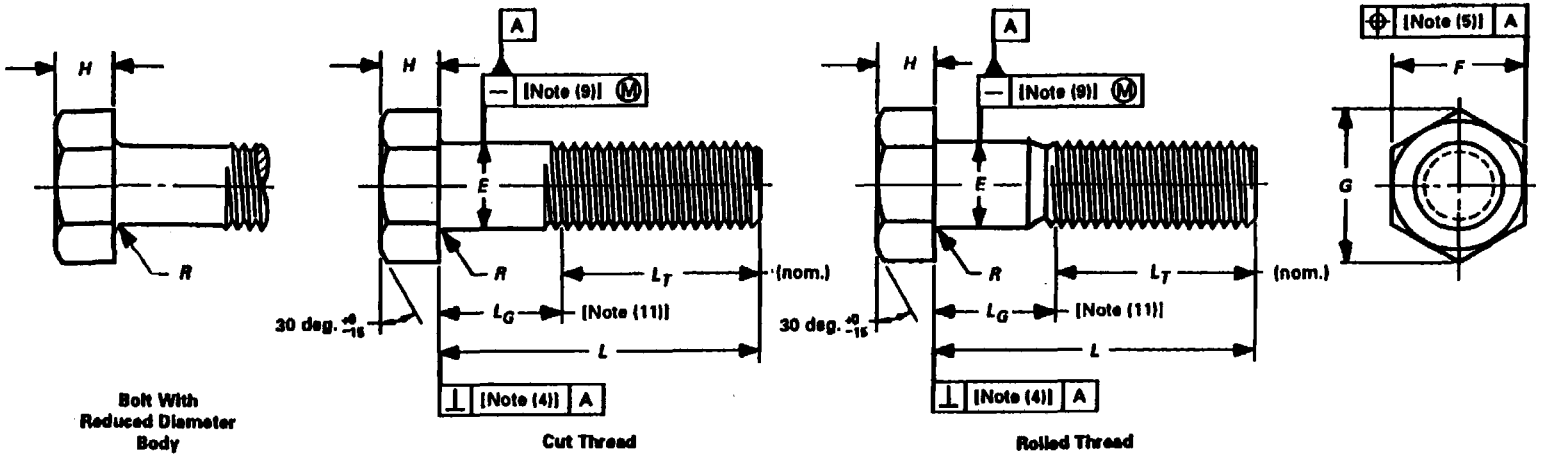


## TABLE 3 DIMENSIONS OF HEAVY HEX BOLTS

| Nominal Size or Basic Product Diameter [Note (16)] | | E | | F | | | G | | H | | | R | | $L_T$ | |
|---|---|---|---|---|---|---|---|---|---|---|---|---|---|---|---|
| | | Full Size Body Diameter [Notes (6), (7)] | | Width Across Flats [Note (3)] | | | Width Across Corners [Note (3)] | | Head Height | | | Radius of Fillet | | Thread Length for Bolt Lengths [Note (11)] | |
| | | | | | | | | | | | | | | 6 in. and Shorter | Over 6 in. |
| | | Max. | Min. | Basic | Max. | Min. | Max. | Min. | Basic | Max. | Min. | Max. | Min. | Nom. | Nom. |
| 1/2 | 0.5000 | 0.515 | 0.482 | 7/8 | 0.875 | 0.850 | 1.010 | 0.969 | 11/32 | 0.364 | 0.302 | 0.03 | 0.01 | 1.250 | 1.500 |
| 5/8 | 0.6250 | 0.642 | 0.605 | 11/16 | 1.062 | 1.031 | 1.227 | 1.175 | 27/64 | 0.444 | 0.378 | 0.06 | 0.02 | 1.500 | 1.750 |
| 3/4 | 0.7500 | 0.768 | 0.729 | 1 1/4 | 1.250 | 1.212 | 1.443 | 1.383 | 1/2 | 0.524 | 0.455 | 0.06 | 0.02 | 1.750 | 2.000 |
| 7/8 | 0.8750 | 0.895 | 0.852 | 1 7/16 | 1.438 | 1.394 | 1.660 | 1.589 | 37/64 | 0.604 | 0.531 | 0.06 | 0.02 | 2.000 | 2.250 |
| 1 | 1.0000 | 1.022 | 0.976 | 1 5/8 | 1.625 | 1.575 | 1.876 | 1.796 | 43/64 | 0.700 | 0.591 | 0.09 | 0.03 | 2.250 | 2.500 |
| 1 1/8 | 1.1250 | 1.149 | 1.098 | 1 13/16 | 1.812 | 1.756 | 2.093 | 2.002 | 3/4 | 0.780 | 0.658 | 0.09 | 0.03 | 2.500 | 2.750 |
| 1 1/4 | 1.2500 | 1.277 | 1.223 | 2 | 2.000 | 1.938 | 2.309 | 2.209 | 27/32 | 0.876 | 0.749 | 0.09 | 0.03 | 2.750 | 3.000 |
| 1 3/8 | 1.3750 | 1.404 | 1.345 | 2 3/16 | 2.188 | 2.119 | 2.526 | 2.416 | 29/32 | 0.940 | 0.810 | 0.09 | 0.03 | 3.000 | 3.250 |
| 1 1/2 | 1.5000 | 1.531 | 1.470 | 2 3/8 | 2.375 | 2.300 | 2.742 | 2.622 | 1 | 1.036 | 0.902 | 0.09 | 0.03 | 3.250 | 3.500 |
| 1 3/4 | 1.7500 | 1.785 | 1.716 | 2 3/4 | 2.750 | 2.662 | 3.175 | 3.035 | 1 5/32 | 1.196 | 1.054 | 0.12 | 0.04 | 3.750 | 4.000 |
| 2 | 2.0000 | 2.039 | 1.964 | 3 1/8 | 3.125 | 3.025 | 3.608 | 3.449 | 1 11/32 | 1.388 | 1.175 | 0.12 | 0.04 | 4.250 | 4.500 |
| 2 1/4 | 2.2500 | 2.305 | 2.214 | 3 1/2 | 3.500 | 3.388 | 4.041 | 3.862 | 1 1/2 | 1.548 | 1.327 | 0.19 | 0.06 | 4.750 | 5.000 |
| 2 1/2 | 2.5000 | 2.559 | 2.461 | 3 7/8 | 3.875 | 3.750 | 4.474 | 4.275 | 1 21/32 | 1.708 | 1.479 | 0.19 | 0.06 | 5.250 | 5.500 |
| 2 3/4 | 2.7500 | 2.827 | 2.711 | 4 1/4 | 4.250 | 4.112 | 4.907 | 4.688 | 1 13/16 | 1.869 | 1.632 | 0.19 | 0.06 | 5.750 | 6.000 |
| 3 | 3.0000 | 3.081 | 2.961 | 4 5/8 | 4.625 | 4.475 | 5.340 | 5.102 | 2 | 2.060 | 1.815 | 0.19 | 0.06 | 6.250 | 6.500 |



Not for Resale

## TABLE 4B $L_G$, MAXIMUM AND $L_B$, MINIMUM LIMITATIONS FOR SHORT SCREWS THREADED FULL LENGTH

| Nominal Size of Basic Product Diameter | For Nominal Product Lengths [Note (1)] | $L_G$, Max. [Note (2)] | For Nominal Product Lengths | | $L_G$, Max. [Note (3)] | | | $L_B$, Min. [Note (4)] |
|---|---|---|---|---|---|---|---|---|
| | Less Than or Equal to | All Thread Series | Greater Than | Less Than or Equal to [Note (5)] | Coarse (UNC) Thread | Fine (UNF) Thread | 8 (UN) Thread | All Thread Series |
| 1/4 | 0.500 | 0.075 | 0.500 | 1.125 | 0.125 | 0.089 | ... | 0.043 |
| 5/16 | 0.625 | 0.083 | 0.625 | 1.250 | 0.139 | 0.104 | ... | 0.045 |
| 3/8 | 0.750 | 0.094 | 0.750 | 1.375 | 0.156 | 0.104 | ... | 0.048 |
| 7/16 | 0.875 | 0.107 | 0.875 | 1.625 | 0.179 | 0.125 | ... | 0.052 |
| 1/2 | 1.000 | 0.115 | 1.000 | 1.750 | 0.192 | 0.125 | ... | 0.053 |
| 9/16 | 1.125 | 0.125 | 1.125 | 2.000 | 0.208 | 0.139 | ... | 0.075 |
| 5/8 | 1.250 | 0.136 | 1.250 | 2.125 | 0.227 | 0.139 | ... | 0.078 |
| 3/4 | 1.500 | 0.150 | 1.500 | 2.500 | 0.250 | 0.156 | ... | 0.081 |
| 7/8 | ... | ... | ... | 2.750 | 0.278 | 0.179 | ... | 0.105 |
| 1 | ... | ... | ... | 3.000 | 0.312 | 0.208 | ... | 0.140 |
| 1 1/8 | ... | ... | ... | 3.500 | 0.357 | 0.208 | 0.312 | 0.146 |
| 1 1/4 | ... | ... | ... | 3.750 | 0.357 | 0.208 | 0.312 | 0.146 |
| 1 3/8 | ... | ... | ... | 4.250 | 0.417 | 0.208 | 0.312 | 0.154 |
| 1 1/2 | ... | ... | ... | 4.500 | 0.417 | 0.208 | 0.312 | 0.154 |
| 1 3/4 | ... | ... | ... | 5.125 | 0.500 | ... | 0.312 | 0.166 |
| 2 | ... | ... | ... | 5.750 | 0.556 | ... | 0.312 | 0.173 |
| 2 1/4 | ... | ... | ... | 6.500 | 0.556 | ... | 0.312 | 0.173 |
| 2 1/2 | ... | ... | ... | 7.125 | 0.625 | ... | 0.312 | 0.183 |
| 2 3/4 | ... | ... | ... | 7.625 | 0.625 | ... | 0.312 | 0.183 |
| 3 | ... | ... | ... | 8.125 | 0.625 | ... | 0.312 | 0.183 |

NOTES:
(1) Tabulated values are equal to 2 times the basic product diameter.
(2) Tabulated values are equal to 1.5 times the coarse thread (UNC) pitch.
(3) Tabulated values are equal to 2.5 times the thread pitch.
(4) $L_B$, min. equals fillet length, $L_f$, max., as given in Table 4A.
(5) Longest screw threaded full length.



Copyright ASME International
Provided by IHS under license with ASME
No reproduction or networking permitted without license from IHS
Not for Resale

**Notes to Table 4:**

(1) **Top of Head.** Top of head shall be full form and chamfered, with the diameter of chamfer circle being equal to the maximum width across flats within a tolerance of minus 15%.

(2) **Wrenching Height, *J*.** Wrenching height is a distance measured from the bearing surface up the side of the head at the corners. The width across corners shall be within specified limits for the full wrenching height.

(3) **Bearing Surface.** Bearing surface shall be flat and washer faced. Diameter of washer face shall be equal to the maximum width across flats within a tolerance of minus 10%.

Thickness of the washer face shall be not less than 0.015 in. nor greater than 0.025 in. for screw sizes ¾ in. and smaller, and not less than 0.015 in. nor greater than 0.035 in. for sizes larger than ¾ in. Measurement of washer face diameter shall be taken at a height of 0.004 in. above the bearing surface.

Circular runout of the bearing surface, with respect to the axis of the body, shall be within the FIM limits specified. Measurement of FIM shall be made as close to the periphery of the bearing surface as possible while the screw is held in a collet or other gripping device at a distance of one screw diameter from the underside of the head.

(4) **True Position of Head.** The axis of the head shall be located at true position with respect to the axis of the body (determined over a distance under the head equal to one diameter) within a tolerance zone whose diameter is equivalent to 6% of the maximum width across flats, regardless of feature size.

(5) **Fillet.** Two styles of head-to-shank fillets are provided for long screws in lengths longer than the maximum lengths specified in Table 4B. Style 1 will be supplied unless Style 2 is specified by the purchaser.

Style 1 is a continuous radius in accordance with the maximum-minimum limits for $R$ shown in Table 4A.

Style 2 has an elliptical shape defined as a smooth, multiradius, concave curve tangent to the underhead bearing surface at a point no greater than one-half of $E_a$, max. or less than one-half of $E_a$, min. from the axis of the screw; and tangent to the shank at a distance from the underhead bearing surface within the limits specified for $L_a$. No radius in the fillet shall be less than $R$, min. (see Fig. 1 and Table 4A).

For short screws threaded full length (Table 4B), the fillet shall be a smooth, concave curve lying within the envelope established by either:

(*a*) a continuous radius tangent to the underhead bearing surface and min./max. shank diameter $E_1$, min. (min. pitch diameter) to $E$, max., whose value shall be no less than $R$, min. as specified in Table 4A; or

(*b*) a continuous or multiradius curve tangent to the underhead bearing surface at a point no greater than one-half $E_a$, max. from the axis of screw, and tangent to the maximum shank diameter, $E$, max., at a distance not exceeding $L_f$, max. from the bearing surface.

No radius in the multiradius curve shall be less than $R$, min. specified in Table 4A (see Fig. 2).

where:

$$L_f, \text{ max.} = \frac{E_a, \text{ max.} - E_1, \text{ min.}}{2}$$

$E_1$, min. = Minimum specified pitch diameter of coarse thread: UNC − 2A

$E_a$, max. = Maximum fillet transition diameter (see Table 4A).

$E_{1a}$, min. = $E_a$, max. − 0.5 ($E_a$, max. − $E_1$, min.)

(6) **Body Diameter.** The diameter of body, except for a length equal to $L_a$, max. under the head, shall conform to the limits for $E$ given in Table 4. The diameter of the unthreaded length on short screws which are threaded for full length shall not be less than the minimum pitch diameter of the thread nor greater than the maximum body diameter, $E$, max., specified in Table 4 (see Fig. 2).

(7) **Point.** Point shall be chamfered or rounded at manufacturer's option from approximately 0.016 in. below the minor diameter of the thread. The first full formed thread at major diameter is located at a distance no greater than 2 times the pitch measured from the end of the screw. This distance is to be determined by measuring how far the point enters into a cylindrical NOT GO major diameter ring gage (reference Gage 3.1, ASME B1.2).

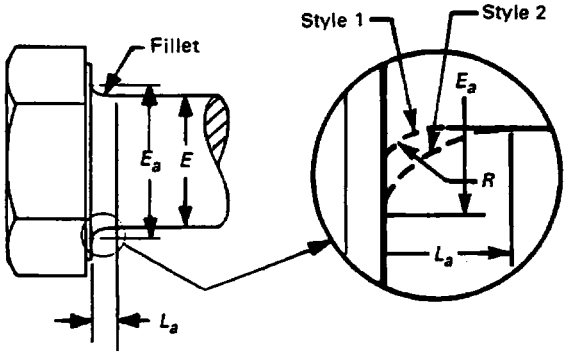


**FIG. 1 UNDERHEAD FILLET FOR LONG SCREWS**



Copyright ASME International
Provided by IHS under license with ASME
No reproduction or networking permitted without license from IHS
Not for Resale

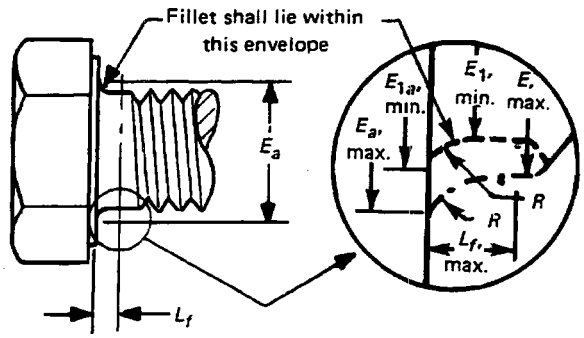


**FIG. 2 UNDERHEAD FILLET FOR SHORT SCREWS THREADED FULL LENGTH**

(8) **Length Tolerances.** Screw length tolerances are given in Table 10. Tolerances for pointed products shall apply.

(9) **Thread Length.** The length of thread on screws shall be controlled by the grip gaging length, $L_G$, max., and body length, $L_B$, min.

Long screws not threaded full length of diameters through 1¼ in. and lengths through 10 in. are specified in Table 5. For short screws threaded full length, $L_G$, max. and $L_B$, min. are given in Table 4B (see Fig. 3).

For diameter-length combinations not included in Table 4B or Table 5, the maximum grip gaging length, $L_G$, max., for long screws which are not threaded full length, as calculated and rounded to two decimal places, shall be equal to the nominal screw length minus the nominal thread length ($L_G$, max. = $L$, nom. − $L_T$). It shall be used as the criterion for inspection.

Nominal thread length, $L_T$, is a reference dimension intended for calculation purposes only, which represents the distance from the extreme end of the screw to the last complete (full form) thread. Nominal thread length equals twice the basic thread diameter plus 0.25 in. for nominal screw length up to and including 6 in., and twice the basic thread diameter plus 0.50 in. for nominal lengths over 6 in.

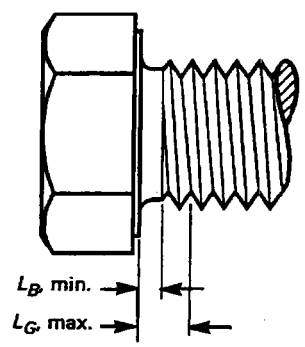


**FIG. 3 $L_G$, MAXIMUM AND $L_B$, MININIMUM FOR SHORT SCREWS THREADED FULL LENGTH**

Body length, $L_B$, min., is the distance measured parallel to the axis of screw from the underhead bearing surface to the last scratch of thread or to the top of the extrusion angle. For diameter length combinations not included in Table 4B or Table 5, the minimum body length, $L_B$, min., as calculated and rounded to two decimal places, shall be equal to the maximum grip gaging length minus the maximum transition thread length ($L_B$, min. = $L_G$, max. − $Y$, max.). It shall be a criterion for inspection.

Transition thread length, $Y$, max., is a reference dimension equal to five coarse (UNC) pitches and intended for calculation purposes only. It includes the length of incomplete threads, the extrusion angle on rolled threads, and tolerances on grip length.

(10) **Incomplete Thread Diameter.** The major diameter of incomplete thread shall not exceed the actual major diameter of the full form thread.

(11) **Body Position and Screw Straightness.** The alignment and straightness of the thread and body shall be such that the screw will meet the gaging requirements set forth in Appendix I. In addition, screws of nominal lengths over 10 in. through 12 in. shall be straight within a maximum camber of 0.006 in. per inch (0.006$L$) of screw length; and screws of nominal lengths over 12 in. through 24 in. shall be straight within a maximum camber of 0.008 in. per inch (0.008$L$) of screw length when checked by the gage and gaging procedure given in Appendix II.

(12) **Threads.** Threads, when rolled, shall be Unified Inch coarse, fine, or 8 thread series (UNRC, UNRF, or 8 UNR Series), Class 2A. Threads produced by other methods shall preferably be UNRC, UNRF, or 8 UNR, but at manufacturer's option, may be Unified Inch coarse, fine, or 8 thread series (UNC, UNF, or 8 UN series), Class 2A. Acceptability of screw threads shall be determined based on System 21 ASME B1.3M, Screw Thread Gaging Systems for Dimensional Acceptability—Inch and Metric Screw Threads (UN, UNR, UNJ, M, and MJ).

(13) **Identification Symbols.** Identification marking symbols on screw heads shall be raised or indented at the manufacturer's option unless otherwise specified. The marking shall be in accordance with the requirements of para. 2.8. Markings shall be legible to the unaided eye with the exception of corrective lenses. When raised, the height of the marking may not exceed 0.015 in. over the specified maximum head height for screws ⅝ in. and



Copyright ASME International
Provided by IHS under license with ASME
No reproduction or networking permitted without license from IHS
Not for Resale

smaller. For screws larger than 5/8 in., the marking may not project more than 0.030 in. over the specified maximum head height. When indented, the depth of the marking shall not reduce the load carrying capability of the fastener.

(14) **Material.** Unless otherwise specified, chemical and mechanical properties of steel screws shall conform to ASTM A 307, ASTM A 449, ASTM A 354 Grade BD, or SAE J429. Other materials and grades shall be as agreed upon by manufacturer and purchaser.

(15) **Nominal Size.** Where specifying nominal size in decimals, zeros preceding the decimal and in the fourth decimal place shall be omitted.

(16) **Dimensional Conformance.** Unless otherwise specified, hex cap screws shall have the following characteristics inspected to ASME B18.18.2M to the inspection levels shown:

| Characteristic | Inspection Level |
|---|---|
| Threads | C |
| Width across corners | C |
| Grip length | C |
| Screw length | C |
| Visual | C |

If verifiable in-process inspection is used, see para. 2.10.

(17) **Additional Requirements.** For additional requirements, see Section 1, Introductory Notes, and Section 2, General Data.



Copyright ASME International
Provided by IHS under license with ASME
No reproduction or networking permitted without license from IHS
Not for Resale

**Notes to Table 6:**

(1) **Top of Head.** Top of head shall be full form and chamfered with the diameter of chamfer circle being equal to the maximum width across flats, within a tolerance of minus 15%.

(2) **Wrenching Height, *J*.** Wrenching height is a distance measured from the bearing surface up the side of the head at the corners. The width across corners shall be within the specified limits for minimum wrenching height.

(3) **Bearing Surface.** Bearing surface shall be flat and washer faced. Diameter of washer face shall be equal to the maximum width across flats within a tolerance of minus 10%.

Thickness of the washer face shall be not less than 0.015 in. nor greater than 0.025 in. for screw sizes ¾ in. and smaller, and not less than 0.015 in. nor greater than 0.035 in. for sizes larger than ¾ in. Measurement of washer face diameter shall be taken at a height of 0.004 in. above the bearing surface.

Circular runout of the bearing surface with respect to the axis of the body shall be within the FIM limits specified. Measurement of FIM shall be made as close to the periphery of the bearing surface as possible while the screw is being held in a collet or other gripping device at a distance of one screw diameter from the underside of the head.

(4) **True Position of Head.** The axis of the head shall be located at true position with respect to the axis of the body (determined over a distance under the head equal to one diameter) within a tolerance zone having a diameter equivalent to 6% of the maximum width across flats, regardless of feature size.

(5) **Fillet.** Two styles of head-to-shank fillets are provided for long screws in lengths longer than the maximum length specified in Table 6B. Style 1 will be supplied unless Style 2 is specified by the purchaser.

Style 1 is a continuous radius in accordance with the maximum-minimum limits for $R$ shown in Table 6A.

Style 2 has an elliptical shape defined as a smooth, multiradius, concave curve tangent to the underhead bearing surface at a point no greater than one-half of $E_a$, max. nor less than one-half of $E_a$, min. from the axis of the screw and tangent to the shank at a distance from the underhead bearing surface within the limits specified for $L_a$. No radius in the fillet shall be less than $R$, min. (see Fig. 4 and Table 6A).

For short screws threaded full length (Table 6B), the fillet shall be a smooth, concave curve lying within the envelope established by either:

(*a*) a continuous radius tangent to the underhead bearing surface and min./max. shank diameter, $E_1$ (min. pitch diameter) to $E$, max., whose value shall be no less than $R$, min. as specified in Table 6A; or

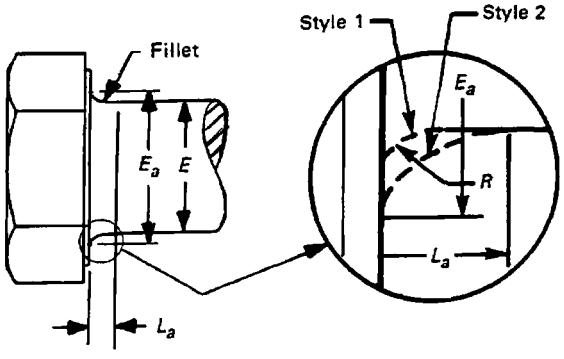


**FIG. 4 UNDERHEAD FILLET FOR LONG SCREWS**

(*b*) a continuous or multiradius curve tangent to the underhead bearing surface at a point no greater than one half $E_a$, max. from the axis of screw and tangent to the maximum shank diameter, $E$, max., at a distance not exceeding $L_f$, min. from the bearing surface. No radius in the curve shall be less than $R$, min., as specified in Table 6A (see Fig. 5).

(6) **Body Diameter.** The diameter of body, except for a length equal to $L_a$, max. under the head, shall conform to the limits for $E$ given in Table 6. The diameter of the unthreaded length on short screws which are threaded for full length shall not be less than the minimum pitch diameter of the thread nor greater than the maximum body diameter, $E$, max., specified in Table 6. Hot forged screws may have a reasonable swell under the head provided the straightness requirement, Note (11), is met.

(7) **Point.** Point shall be chamfered or rounded at manufacturer's option from approximately 0.016 in. below

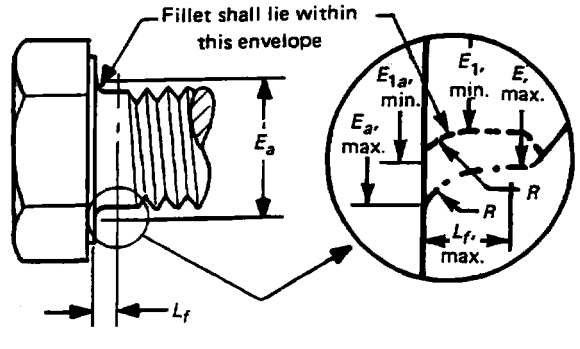


**FIG. 5 UNDERHEAD FILLET FOR SHORT SCREWS THREADED FULL LENGTH**



Copyright ASME International
Provided by IHS under license with ASME
No reproduction or networking permitted without license from IHS
Not for Resale

the minor diameter of the thread. The first full formed thread at major diameter is located at a distance no greater than 2 times the pitch measured from the end of the screw. This distance is determined by measuring how far the point enters into a cylindrical NOT GO major diameter ring gage (ref. Gage 3.1 ASME B1.2).

where:

$$L_f, \text{ max.} = \frac{E_a, \text{ max.} - E_1, \text{ min.}}{2}$$

$E_1$, min. = Minimum specified pitch diameter of coarse thread (UNC)

$E_a$, max. = Maximum fillet transition diameter (see Table 6A).

$E_{1a}$, min. = $E_a$, max. − 0.5 ($E_a$, max. − $E_1$, min.)

(8) **Length Tolerances.** Screw length tolerances are given in Table 10. Tolerances for pointed products shall apply.

(9) **Thread Length.** The length of thread on screws shall be controlled by the grip gaging length, $L_G$, max., and body length, $L_B$, min. For long screws threaded full length of diameters through 1¼ in. and lengths through 10 in., the values for $L_G$, max. and $L_B$, min. are specified in Table 5. For short screws threaded full length, $L_G$, max. and $L_B$, min. are given in Table 6B (see Fig. 3).

For diameter-length combinations not included in Table 6B or Table 5, the maximum grip gaging length, $L_G$, max., for long screws which are not threaded full length, as calculated and rounded to two decimal places, shall be equal to the nominal screw length minus the nominal thread length ($L_G$, max. = $L$, nom. − $L_T$). It shall be used as the criterion for inspection.

Nominal thread length, $L_T$, is a reference dimension intended for calculation purposes only. It represents the distance from the extreme end of the screw to the last complete (full form) thread. Nominal thread length equals twice the basic thread diameter plus 0.25 in. for nominal bolt lengths up to and including 6 in., and twice the basic thread diameter plus 0.50 in. for nominal lengths over 6 in.

Transition thread length, $Y$, max., is a reference dimension equal to five coarse (UNC) pitches and is intended for calculation purposes only. It includes the length of incomplete threads, the extrusion angle on rolled threads, and the tolerances on grip length.

For diameter-length combinations not included in Table 5 or Table 6B, the minimum body length, as calculated and rounded to two decimal places, shall be equal to the maximum grip gaging length minus the maximum transition thread length ($L_B$, min. = $L_G$, max. − $Y$, max.). It shall be used as the criterion for inspection.

(10) **Incomplete Thread Diameter.** The major diameter of incomplete thread shall not exceed the actual major diameter of the full form thread.

(11) **Body Position and Screw Straightness.** The alignment and straightness of the thread and body shall be such that the screw will meet the gaging requirements set forth in Appendix I. In addition, screws for nominal lengths over 10 in. through 12 in. shall be straight within a maximum camber of 0.006 in. per inch (0.006$L$) of screw length; and screws of nominal lengths over 12 in. through 24 in. shall be straight within a maximum camber of 0.008 in. per inch (0.008$L$) of screw length when checked by the gage and gaging procedure given in Appendix II.

(12) **Threads.** Threads, when rolled, shall be Unified Inch coarse, fine, or 8 thread series (UNRC, UNRF, or 8 UNR Series), Class 2A in accordance with ASME B1.1. Threads produced by other methods shall preferably be UNRC, UNRF, or 8 UNR, but at manufacturer's option, may be Unified Inch coarse, fine, or 8 thread series (UNC, UNF, or UN Series), Class 2A. Acceptability of screw threads shall be determined based on System 21 of ASME B1.3M, Screw Thread Gaging Systems for Dimensional Acceptability.

(13) **Identification Symbols.** Identification marking symbols on screw heads shall be raised or indented at the manufacturer's option unless otherwise specified. The marking shall be in accordance with the requirements of para. 2.8. Markings shall be legible to the unaided eye with the exception of corrective lenses. When raised, the height of the marking may not exceed 0.015 in. over the specified maximum head height for screws ⅝ in. and smaller. For screws larger than ⅝ in., the marking may not project more than 0.030 in. over the specified maximum head height. When indented, the depth of the marking shall not reduce the load carrying capability of the fastener.

(14) **Material.** Unless otherwise specified, chemical and mechanical properties of steel screws shall conform to ASTM A 307, ASTM A 449, ASTM A 354 Grade BD, or SAE J429. Other materials and grades shall be as agreed upon by manufacturer and purchaser.

(15) **Nominal Size.** Where specifying nominal size in decimals, zeros preceding the decimal and in the fourth decimal place shall be omitted.

(16) **Dimensional Conformance.** Unless otherwise specified, heavy hex screws shall have the following characteristics inspected to ASME B18.18.2M to the inspection levels shown:



Copyright ASME International
Provided by IHS under license with ASME
No reproduction or networking permitted without license from IHS
Not for Resale

# APPENDIX I
# SHANK POSITION AND STRAIGHTNESS SLEEVE GAGES AND GAGING

(This Appendix is an integral part of ASME B18.2.1-1996 and is placed after the main text for convenience.)

Gages capable of simultaneously checking shank position and straightness are illustrated below for screws with lengths 10 in. and shorter.

Screws with lengths 10 in. and shorter shall be gaged in accordance with this Appendix. Screws with lengths exceeding 10 in. shall be gaged in accordance with this Appendix using the 9 in. length of sleeve, and additionally, shall be gaged in accordance with the gaging described in Appendix II and to the straightness requirements specified by Note (11) to Table 4 or Table 6, as applicable.

Both constructions can accommodate different lengths of screws through the combination of various lengths of sleeves to build up the required length, *L*. When two or more sections are combined, care must be exercised to assure accurate alignment of the internal hole.

In the lower construction, GO thread ring gage, *A*, is centered on sleeve, *B*, by means of positioning plug, *E*, and is secured in position by attachment screws, *C*. The ring gage is set to Class 2B max. pitch diameter by the use of positioning plug, *E*. The maximum length of the sleeve gage, *B*, for any diameter and length of screw will be 9 in. The hole diameter of the sleeve will be the nominal screw diameter plus 0.031 in. when inspecting screws of sizes ¾ in. and smaller with lengths 6 in. and shorter; and plus 0.062 in. when inspecting screws of larger sizes and/or longer lengths.

To insure adequate service life, gages and sleeve sections should be suitably hardened.

Failure of the product to enter the threads of the gage freely by hand for a minimum of two complete threads indicates excessive positional error and/or out-of-straightness.

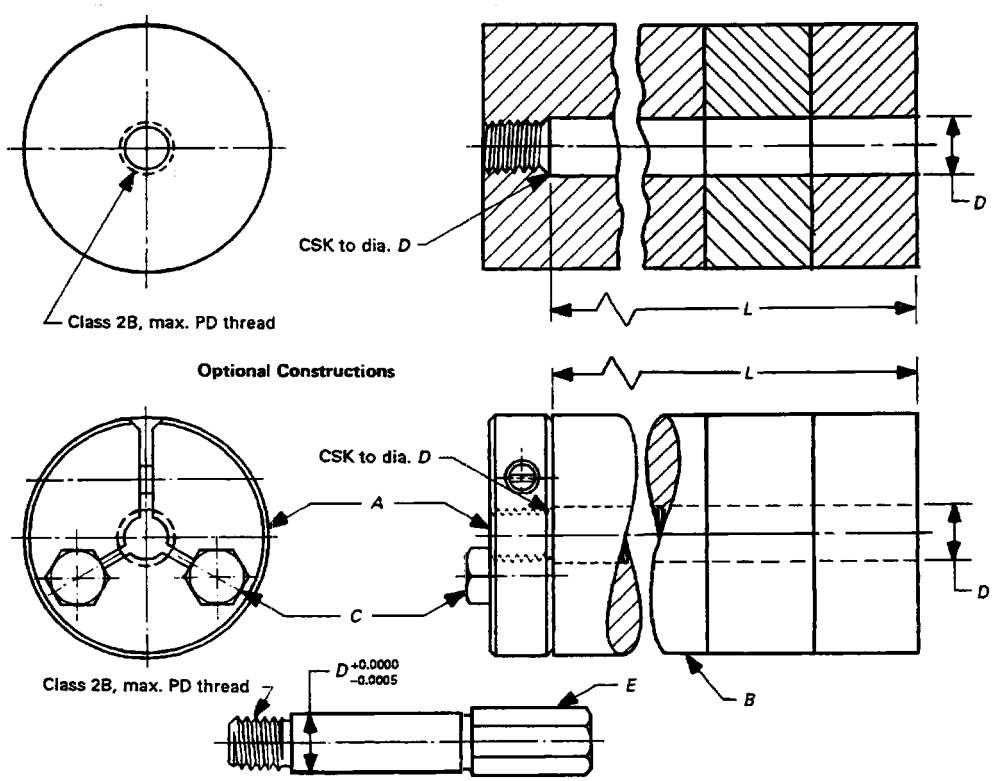


*D* = Maximum screw diameter plus diametral clearance allowance
*L* = Nominal screw length minus 0.50 in. for screw lengths up to and including 6 in. and minus 1.00 in. for lengths over 6 in.



Copyright ASME International
Provided by IHS under license with ASME
No reproduction or networking permitted without license from IHS
Not for Resale

Copyright ASME International
Provided by IHS under license with ASME
No reproduction or networking permitted without license from IHS
Not for Resale

# APPENDIX II
# STRAIGHTNESS GAGE AND GAGING

(This Appendix is an integral part of ASME B18.2.1-1996 and is placed after the main text for convenience.)

The conformance of bolts to shank straightness or camber limitations set forth in the respective product standards may be checked by the use of the typical gage illustrated below in accordance with the following procedures:

Screws with lengths 10 in. and shorter shall be gaged in accordance with Appendix I requirements. Screws with lengths longer than 10 in. shall be gaged in accordance with Appendix I requirements using the 9 in. length of sleeve, and additionally shall be gaged in accordance with the gaging described in this Appendix and to the straightness requirements specified by Note (11) to Table 4 or Table 6, as applicable.

Allowable total camber on the product to be inspected shall be calculated by multiplying the specified permissible camber per inch of length by the product length expressed as a two place decimal. The total camber thus derived shall be added to the specified maximum body diameter exclusive of allowance for swell or fin under head, and the adjustable rail of gage shall be adjusted to provide a parallel space between the rails equal to this distance by obtaining common readings on both micrometer heads. The adjustable rail shall then be locked in place by tightening securing screws.

The product shall then be inserted between rails, excluding from the gage any permissible length of swell or fillet under the head. The product shall be rotated by hand through full 360 deg. Any interference occurring between the product and the gage which is sufficient to prevent rotation indicates excessive camber.

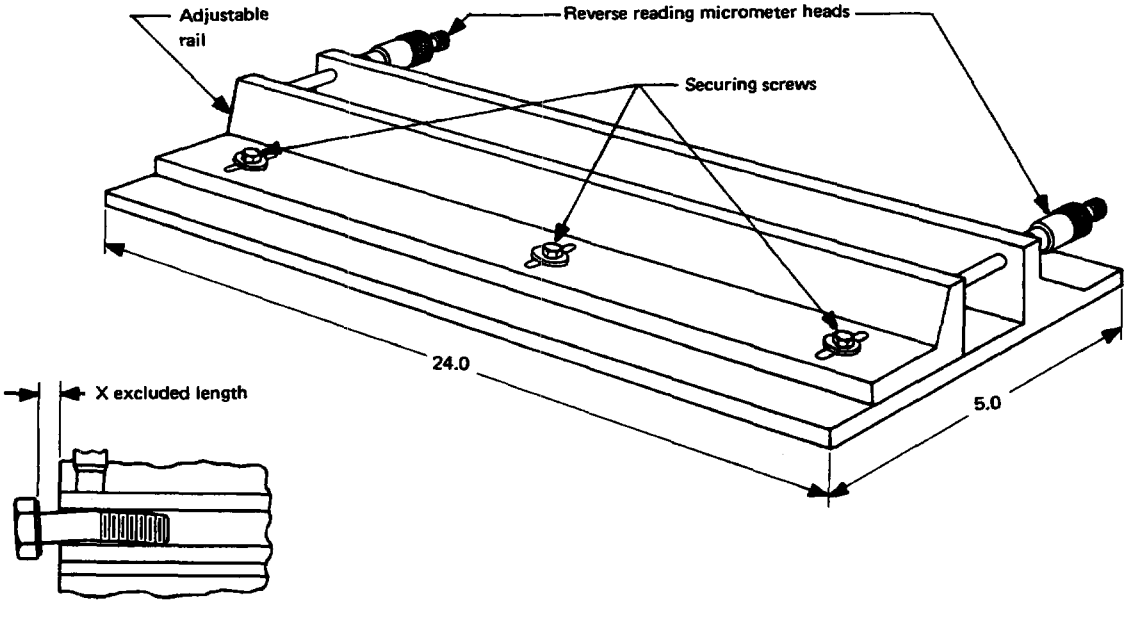


TYPICAL STRAIGHTNESS GAGE

Excluded lengths applicable to the various products shall be as designated below:

X = Two times the basic bolt diameter to allow for permissible swell under the head for Square Bolts (Table 1), Hex Bolts (Table 2), Heavy Hex Bolts (Table 3), and Heavy Hex Structural Bolts (Table 5).



Copyright ASME International
Provided by IHS under license with ASME
No reproduction or networking permitted without license from IHS
Not for Resale

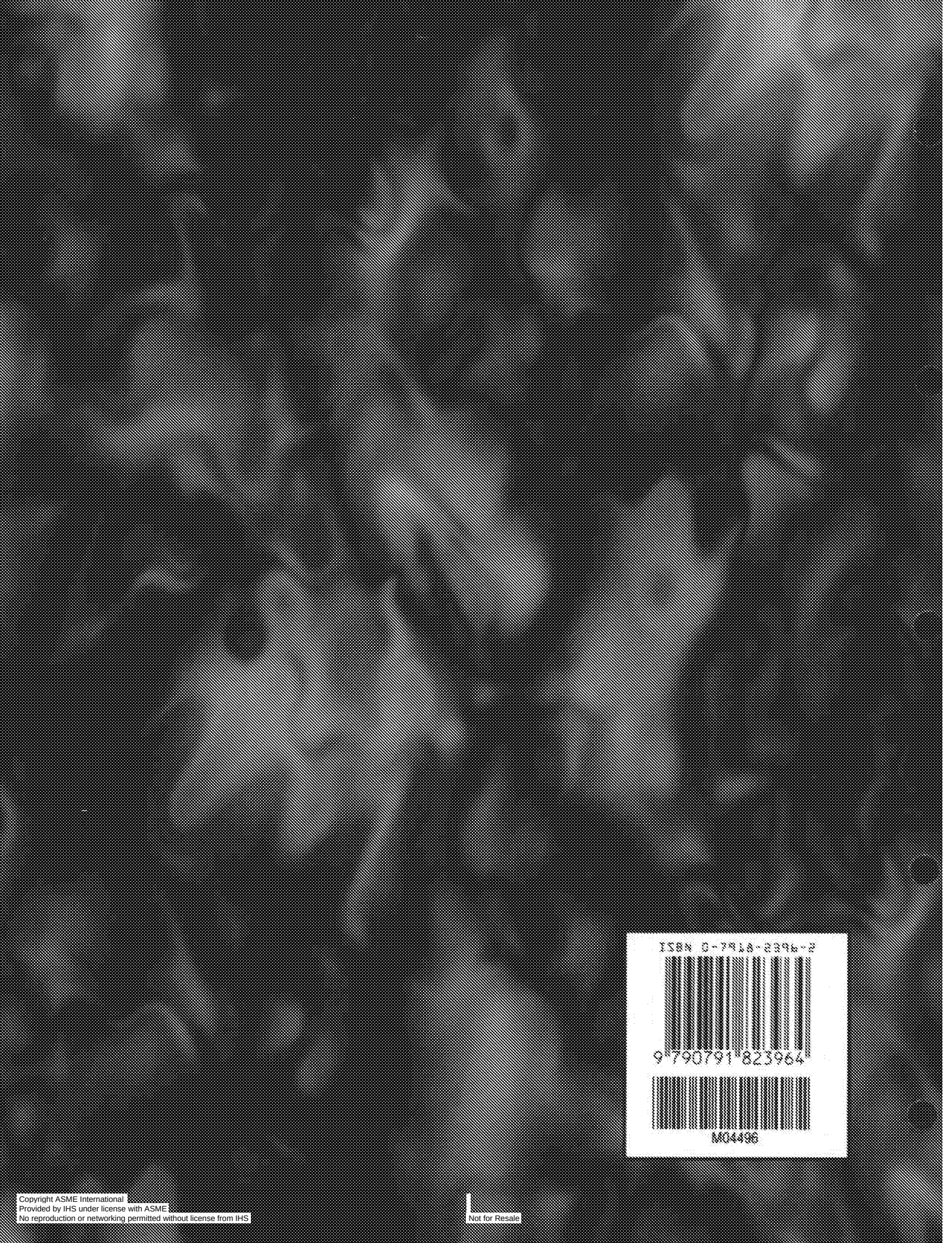

ISBN 0-7918-2396-2

Copyright ASME International
Provided by IHS under license with ASME
No reproduction or networking permitted without license from IHS

Not for Resale