STD.ASME B18.15M-ENGL 1998 ■ 0759670 0613006 569 ■

ASME B18.15M-1998

METRIC LIFTING EYES

Incorporating ASME B18.15.1M-1998 and ASME B18.15.2M-1998

AN AMERICAN NATIONAL STANDARD

The American Society of Mechanical Engineers

Copyright ASME International
Provided by IHS under license with ASME
No reproduction or networking permitted without license from IHS

Not for Resale

STD.ASME B18.15M-ENGL 1998 ■ 0759670 0613007 4T5 ■

The American Society of Mechanical Engineers

AN AMERICAN NATIONAL STANDARD

METRIC LIFTING EYES

Incorporating ASME B18.15.1M-1998 and ASME B18.15.2M-1998

ASME B18.15M-1998

Copyright ASME International
Provided by IHS under license with ASME
No reproduction or networking permitted without license from IHS , Not for Resale

Date of Issuance: July 31, 1999

This Standard will be revised when the Society approves the issuance of a new edition. There will be no addenda issued to this edition.

ASME will issue written replies to inquiries concerning interpretation of technical aspects of this Standard.

ASME is the registered trademark of The American Society of Mechanical Engineers.

This code or standard was developed under procedures accredited as meeting the criteria for American National Standards. The Standards Committee that approved the code or standard was balanced to assure that individuals from competent and concerned interests have had an opportunity to participate. The proposed code or standard was made available for public review and comment that provides an opportunity for additional public input from industry, academia, regulatory agencies, and the public-at-large.

ASME does not "approve," "rate," or "endorse" any item, construction, proprietary device, or activity.

ASME does not take any position with respect to the validity of any patent rights asserted in connection with any items mentioned in this document, and does not undertake to insure anyone utilizing a standard against liability for infringement of any applicable Letters Patent, nor assumes any such liability. Users of a code or standard are expressly advised that determination of the validity of any such patent rights, and the risk of infringement of such rights, is entirely their own responsibility.

Participation by federal agency representative(s) or person(s) affiliated with industry is not to be interpreted as government or industry endorsement of this code or standard.

ASME accepts responsibility for only those interpretations issued in accordance with governing ASME procedures and policies which precludes the issuance of interpretations by individual volunteers.

No part of this document may be reproduced in any form,
in an electronic retrieval system or otherwise,
without the prior written permission of the publisher.

The American Society of Mechanical Engineers
Three Park Avenue, New York, NY 10016-5990

Copyright © 1999 by
THE AMERICAN SOCIETY OF MECHANICAL ENGINEERS
All Rights Reserved
Printed in U.S.A.

Copyright ASME International
Provided by IHS under license with ASME
No reproduction or networking permitted without license from IHS

Not for Resale

FOREWORD

Forged threaded lifting eyes used in lifting applications come within the scope of ASME Standards Committee B18 on Standardization of Bolts, Nuts, Rivets, Screws, Washers, and Similar Fasteners, which was organized in March of 1922 under the procedures of the American Engineering Standards Committee [later renamed the American National Standards Institute, Inc. (ANSI)], with the Society of Automotive Engineers and The American Society of Mechanical Engineers as joint sponsors.

Subcommittee No. 15 was appointed in March of 1960 and asked to give initial consideration to the establishment of a standard on forged lifting eyes including rated capacity. At its first meeting, held on April 22, 1960, the committee decided to ask all of the leading suppliers to furnish dimensions, tolerances, and rated capacities for their standard lifting eyes. This data was collected, consolidated, and studied in detail. It was soon apparent that it would be impossible to develop an ANSI standard that would agree with even a small percentage of the standard products then being produced. The first proposal, therefore, attempted to come as close as possible to an average value and still maintain an orderly progression from the smaller to the larger sizes.

ANSI Standards Committee B18 approved the proposal by letter ballot taken on September 24, 1964, and following approval by the sponsors it was submitted on July 28, 1965 to ANSI for approval. Because of a conflict with the USA Standard Specification for Carbon Steel Eyebolts, G38.2-1964, final approval was withheld. Subsequent to the withdrawal of G38.2-1964, ANSI approved the B18 proposal on February 18, 1969.

A revision was approved by letter ballot of ASME (the sponsor) and submitted to ANSI for designation as an American National Standard. ANSI approval of B18.15-1985, Forged Eyebolts, was granted on July 17, 1985.

In the mid-1980s it was determined that there would be need for a standard to cover lifting eyes with metric threads. A standard was developed using the existing forgings. After several meetings and revisions, the Committee decided, at the June 1990 meeting, to create a standard that would be compatible with the world market and would thus reflect the ISO standard. This meant that only shouldered lifting eyes would be included, because that is the only style in the ISO standard. There were concerns about the thread undercut used on metric lifting eyes. An FEA (finite element analysis) determined that the undercut was not detrimental to performance. Although the material generally used by U.S. manufacturers greatly exceeds the requirements of the ISO standard, the decision was made to down rate the capacity to the ISO standard requirements. Following approval by ASME, the document was submitted to ANSI. ASME B18.15.1M-1998 was approved by ANSI on November 30, 1998.

In response to requests from users for lifting eyes with greater lifting capacity and longer threads, the Committee created a standard for straight shank (no flange) lifting eyes based on the capabilities of the materials used in the U.S. for inch threaded lifting eyes. Following approval by ASME, the document was submitted to ANSI. ASME B18.15.2M-1998 was approved by ANSI on July 7, 1998.

Copyright ASME International
Provided by IHS under license with ASME
No reproduction or networking permitted without license from IHS
Not for Resale

CORRESPONDENCE WITH B18 COMMITTEE

General. ASME Standards are developed and maintained with the intent to represent the consensus of concerned interests. As such, users of this Standard may interact with the Committee by requesting interpretations, proposing revisions, and attending Committee meetings. Correspondence should be addressed to:

Secretary, B18 Main Committee
The American Society of Mechanical Engineers
Three Park Avenue
New York, NY 10016-5990

Proposing Revisions. Revisions are made periodically to the Standard to incorporate changes that appear necessary or desirable, as demonstrated by the experience gained from the application of the Standard. Approved revisions will be published periodically.

The Committee welcomes proposals for revisions to this Standard. Such proposals should be as specific as possible, citing the paragraph number(s), the proposed wording, and a detailed description of the reasons for the proposal, including any pertinent documentation.

Interpretations. Upon request, the B18 Committee will render an interpretation of any requirement of the Standard. Interpretations can only be rendered in response to a written request sent to the Secretary of the B18 Main Committee.

The request for interpretation should be clear and unambiguous. It is further recommended that the inquirer submit his/her request in the following format:

Subject:	Cite the applicable paragraph number(s) and the topic of the inquiry.
Edition:	Cite the applicable edition of the Standard for which the interpretation is being requested.
Question:	Phrase the question as a request for an interpretation of a specific requirement suitable for general understanding and use, not as a request for an approval of a proprietary design or situation. The inquirer may also include any plans or drawings, which are necessary to explain the question; however, they should not contain proprietary names or information.

Requests that are not in this format will be rewritten in this format by the Committee prior to being answered, which may inadvertently change the intent of the original request.

ASME procedures provide for reconsideration of any interpretation when or if additional information that might affect an interpretation is available. Further, persons aggrieved by an interpretation may appeal to the cognizant ASME Committee or Subcommittee. ASME does not "approve," "certify," "rate," or "endorse" any item, construction, proprietary device, or activity.

Attending Committee Meetings. The B18 Main Committee regularly holds meetings, which are open to the public. Persons wishing to attend any meeting should contact the Secretary of the B18 Main Committee.

Copyright ASME International
Provided by IHS under license with ASME
No reproduction or networking permitted without license from IHS
Not for Resale

ASME B18 STANDARDS COMMITTEE
Standardization of Bolts, Nuts, Rivets, Screws, Washers, and Similar Fasteners

(The following is the roster of the Committee at the time of approval of this Standard.)

OFFICERS

D. A. Clever, *Chair*
R. D. Strong, *Vice Chair*
S. W. Vass, *Vice Chair*
R. L. Crane, *Secretary*

COMMITTEE PERSONNEL

J. C. Akins, Safety Socket Screw Corp.
J. Altman, Rotor Clip Co.
J. B. Belford, Lawson Products, Inc.
D. J. Broomfield, Illinois Tool Works, Inc.
J. A. Buda, SPS Technologies, Inc.
R. M. Byrne, Trade Association Management, Inc.
D. A. Clever, Deere & Co.
A. P. Cockman, Ford Motor Co.
T. Collier, Cam-Tech Industries, Inc.
R. L. Crane, The American Society of Mechanical Engineers
A. C. DiCola, Wrought Washer Manufacturing, Inc.
A. Dinh, Defense Industrial Supply Center
W. D. Downing, Black & Decker Inc.
B. A. Dusina, Federal Screw Works
D. S. George, Ford Motor Co.
R. J. Harrington, Spirol International Corp.
B. Hasiuk, Defense Industrial Supply Center
A. Herskovitz, U.S. Army
A. C. Hood, ACH Technologies
J. Hubbard, Rockford Fastener, Inc.
F. W. Kern, Society of Automotive Engineers
W. H. Kopke, ITW Shakeproof Industrial Products
P. D. Korsmo, Consultant
J. G. Langenstein, Consultant
M. Levinson, ITW Shakeproof Industrial Products
J. B. Levy, Consultant
L. L. Lord, Caterpillar, Inc.
A. D. McCrindle, Stelco Fasteners, Ltd.
K. E. McCullough, Consultant
R. F. Novotny, Textron
M. D. Prasad, General Motors Corp.
W. Schevey, BGM Fastener Co., Inc.
J. H. Slass, *Alternate,* Rotor Clip Co.
R. D. Strong, General Motors Corp.
J. F. Sullivan, National Fastener Distributors Association
R. L. Tennis, Caterpillar, Inc.
S. W. Vass, Lake Erie Screw Corp./IFI
R. G. Weber, Fairfield University
C. J. Wilson, Industrial Fasteners Institute
R. B. Wright, Wright Tool Co.
J. G. Zeratsky, National Rivet & Manufacturing Co.

Copyright ASME International
Provided by IHS under license with ASME
No reproduction or networking permitted without license from IHS
Not for Resale

SUBCOMMITTEE 15 — LIFTING EYES

J. G. Langenstein, *Chair,* Consultant
A. P. Cockman, Ford Motor Co.
A. Herskovitz, U.S. Army
L. C. Schroeder, Materials & Research Center
J. F. Sullivan, National Fastener Distributors Association

Copyright ASME International
Provided by IHS under license with ASME
No reproduction or networking permitted without license from IHS
Not for Resale

CONTENTS

Foreword iii
Correspondence With B18 Committee v
Standards Committee Roster vii
ASME B18.15.1M-1998 Forged Lifting Eyes 1
ASME B18.15.2M-1998 Metric Straight Shank Lifting Eyes 7

Copyright ASME International
Provided by IHS under license with ASME
No reproduction or networking permitted without license from IHS
Not for Resale

ASME B18.15.1M-1998

1 Introductory Notes 3

2 Requirements 4

3 Application 4

Figures

1 Identification Location 6

2 Nonaxial Load Application 6

Tables

1 Rated, Proof, and Breaking Loads 4

2 Dimensions 5

Copyright ASME International
Provided by IHS under license with ASME
No reproduction or networking permitted without license from IHS
Not for Resale

FORGED LIFTING EYES

1 INTRODUCTORY NOTES

1.1 Scope

This Standard covers dimensional and load requirements for forged metric threaded lifting eyes intended primarily for lifting applications.

The inclusion of dimensional data in this Standard is not intended to imply that all sizes described are production stock items. Consumers should consult with suppliers concerning lists of stock production items.

1.2 Comparison With ISO 3266

This Standard is based on ISO 3266:1984 Type 1. Maximum lifting capacities and proof loads for a particular thread size comply with ISO 3266. Minimum breaking loads in ISO 3266 are approximately 4 times maximum lifting capacities; in this Standard minimum breaking loads are approximately 5 times maximum lifting capacities. ISO 3266 does not have a tapered eye thickness as shown in this Standard. In addition, for some sizes the following features do not comply with the ISO standard:

(a) flange diameter

(b) thread undercut diameter

(c) stud length

Control is also required for some dimensions not controlled in ISO 3266.

1.3 Dimensions

All dimensions in this Standard are in millimeters (mm).

1.4 Terminology

For definitions of terms relating to fasteners or component features used in this Standard, refer to ANSI B18.12.

1.5 Referenced Standards

ASME B1.3M, Screw Thread Gaging Systems for Dimensional Acceptability — Inch and Metric Screw Threads (UN, UNR, UNJ, M, and MJ)[1]

ASME B1.13M, Metric Screw Threads — M Profile[1]

ANSI B18.12, Glossary of Terms for Mechanical Fasteners[1]

ASME B18.18.1M, Inspection and Quality Assurance for General Purpose Fasteners[1]

ASME B18.18.2M, Inspection and Quality Assurance for High-Volume Machine Assembly Fasteners[1]

ASME B18.18.3M, Inspection and Quality Assurance for Special Purpose Fasteners[1]

ASME B18.18.4M, Inspection and Quality Assurance for Fasteners for Highly Specialized Engineered Applications[1]

Publisher: The American Society of Mechanical Engineers, Three Park Avenue, New York, NY 10016-5990; Order Department: 22 Law Drive, Box 2300, Fairfield, New Jersey 07007-2300

ASTM A 489, Standard Specification for Carbon Steel Lifting Eyes

ASTM F 541, Standard Specification for Alloy Steel Eyebolts

Publisher: American Society for Testing and Materials, 100 Barr Harbor Drive, West Conshohocken, PA 19428

ISO 3266, Eyebolts for General Lifting Purposes[1]

Publisher: International Organization for Standardization, 1 rue de Varembé, Case postale 56, CH-1121, Genève 20, Switzerland/Suisse

1.6 Designation

Lifting eyes conforming to this Standard shall be designated by the following data, preferably in the sequence shown:

(a) ASME document number

(b) product name

[1] May also be obtained from American National Standards Institute, 11 West 42nd Street, New York, NY 10036.

Copyright ASME International
Provided by IHS under license with ASME
No reproduction or networking permitted without license from IHS
Not for Resale

TABLE 1 RATED, PROOF, AND BREAKING LOADS

Thread Size	Maximum Lifting Capacity, kg	Proof Load, kN	Minimum Breaking Load, kN
M8	160	3.2	8
M10	250	5	12.5
M12	400	8	20
M16	630	12.5	31.5
M20	1 000	20	50
M24	1 600	32	80
M30	2 500	50	125
M36	4 000	80	200
M42	6 300	125	315
M48	8 000	160	400
M56	10 000	200	500
M64	16 000	320	800

(c) nominal thread size
(d) ASTM material

EXAMPLES:
(1) ASME B18.15.1M Lifting Eye M12 ASTM A 489 Steel
(2) ASME B18.15.1M Lifting Eye M30 ASTM A 489 Steel

2 REQUIREMENTS

2.1 Material

The material requirements for general purpose carbon steel lifting eyes used between 0 and 135°C are covered by ASTM A 489. Lifting eyes requiring improved toughness or intended primarily for temperature applications to –40°C are covered by ASTM F 541. When other materials are required, the material shall be as agreed upon by the manufacturer and user.

2.2 Mechanical and Performance Requirements

Proof and breaking loads shall meet or exceed the requirements of Table 1. Tests shall be performed in accordance with ASTM A 489.

2.3 Threads

Threads shall be coarse thread series Class 6g as specified in ASME B1.13M. Threads shall be inspected in accordance with ASME B1.3M System 21 unless otherwise specified. Rolled threads to improve fatigue life of the lifting eye are desirable. These lifting eyes are intended to be used in tapped holes with Class 6H threads.

2.4 Dimensions and Tolerances

Dimensions and tolerances are listed in Table 2.

2.5 Marking

All marks shall be raised. As a minimum, these shall include the manufacturer's identification, part thread size, and rating. The preferred location for markings is shown in Fig. 1.

2.6 Inspection and Quality Assurance

Unless otherwise specified, acceptability of lifting eyes shall be determined in accordance with ASME B18.18.1M.

2.6.1 Performance Certification. Unless otherwise specified, proof load and minimum breaking load specified in Table 1 shall be inspected to ASME B18.18.2M level B.

2.6.2 Dimensional Characteristics. Unless otherwise specified, the following designated dimensional characteristics shall be inspected in accordance with ASME B18.18.2M and shall be within their specified limits:

Characteristic	Inspection Level
Thread Acceptability	C
Visual Inspection (shall include nicks and cracks)	C

If verifiable in-process inspection is used according to ASME B18.18.3M or ASME B18.18.4M, the final inspection level sample sizes of those respective standards shall apply.

For nondesignated dimensional characteristics, the provisions of ASME B18.18.1M shall apply. Should a nondesignated dimension be determined to be outside its specified limits, it shall be deemed conforming to this Standard if the user who is the installer accepts the dimension, based on form, fit, and function considerations.

3 APPLICATION

3.1 Periodic Inspection

Lifting eyes shall be free from visible defects that might affect serviceability. Lifting eyes should be routinely visually inspected for such defects as:

Copyright ASME International
Provided by IHS under license with ASME
No reproduction or networking permitted without license from IHS
Not for Resale

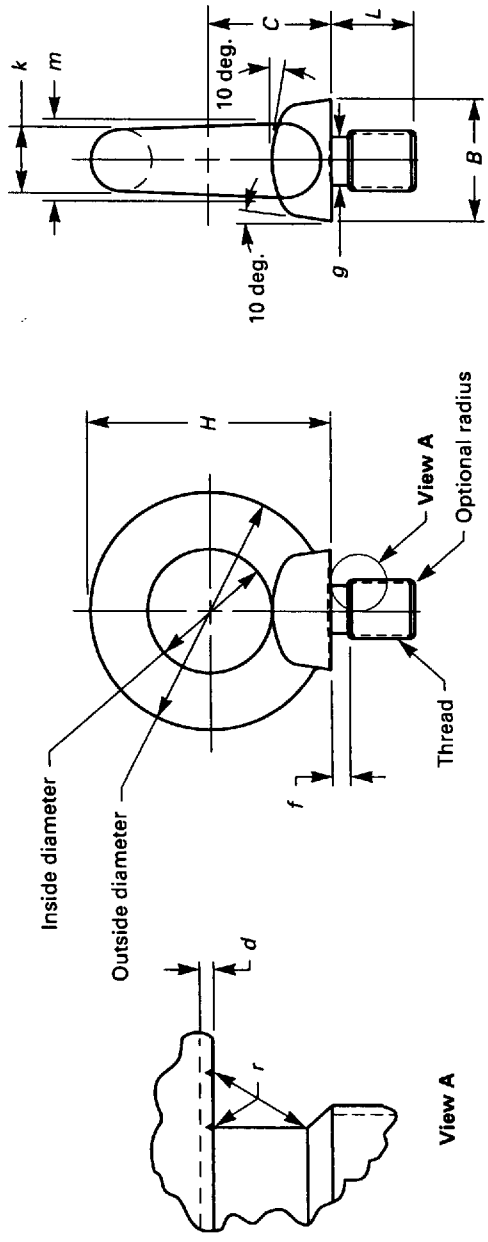

TABLE 2 DIMENSIONS

Thread Size	Inside Diameter, Min.	Inside Diameter, Max.	Eye Thickness, k Max.	Eye Thickness, m Max.	Outside Diameter, r, Max.	Flange Diameter B	Height From Flange H Max.	Center Line Height C, Ref.	Thread Relief, Diameter g, Min.	Thread Relief, Diameter g, Max.	Thread Relief, f Max.	Thread Relief, Radius r, −0.0	Thread Relief, d Max.	Stud L, Min.	Stud L, Max.
M8	20	21	6.3	10	40.6	18±2	40.6	19	6.3	6.5	3	1.0+0.3	1.3	12	13
M10	24	25.5	8	12	49.1	23±3	49.1	23	7.9	8.1	4	1.0+0.3	1.3	15	16
M12	28	29.5	9.5	14	57.1	28±3	57.1	27	9.6	9.9	4	1.0+0.5	1.5	18	19
M16	34	36.25	12.5	16	68.65	33±3	68.65	33	13.3	13.6	5	1.0+0.5	1.5	24	25
M20	40	42.25	16	19	79.65	38±3	79.65	38	16.6	17.3	6	1.0+0.5	1.5	27	28
M24	48	50.25	19	24	96.65	48±3	96.65	47	20.0	20.3	7	2.0+0.8	2.8	31	32
M30	56	58.25	24	28	112.65	63±3	112.65	55	25.3	25.8	8	2.0+0.8	2.8	39	40
M36	67	70	28	32	113	73±3	133	64	30.6	31.1	10	3.0+0.8	3.8	48	49
M42	80	83	34	38	156	83±3	156	76	36.0	36.6	11	3.0+0.8	3.8	56	57
M48	95	98	38	46	185	96±5	185	90	41.4	42.0	12	3.0+0.8	3.8	65	66
M56	112	115	45	50	210	108±5	220	103	48.7	49.4	13	4.0+0.8	4.8	73	74
M64	125	128	50	58	237	115±5	237	116	56.0	56.7	14	4.0+1.0	5.0	85	86

Copyright ASME International
Provided by IHS under license with ASME
No reproduction or networking permitted without license from IHS

Not for Resale

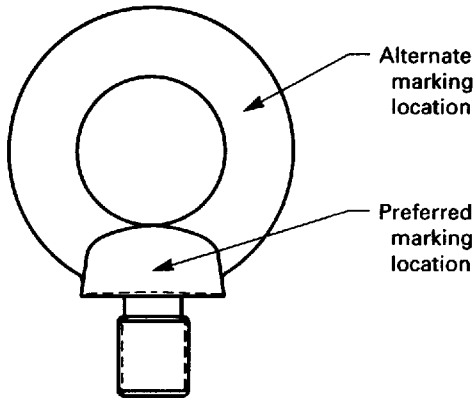

FIG. 1 IDENTIFICATION LOCATION

(a) bent or distorted eye or shank
(b) nicks and gouges
(c) obvious wear
(d) worn and/or distorted threads
(e) cracks

If any of these defects are visible, the lifting eye should be removed from service and destroyed.

3.2 Selection Guides

The following are some suggestions on the application of a lifting eye.

(a) Loads must always be applied to lifting eyes in the plane of the eye, not at some angle to the plane. See Fig. 2.

(b) Coatings are not recommended. If, however, a coating must be applied, lifting eyes should be visually inspected for flaws prior to applying a coating. Coatings such as painting, galvanizing, or plating cover flaws and interfere with inspection.

(c) Holes used for installation of lifting eyes shall be tapped sufficiently deep to allow the shoulder to seat.

(d) To obtain the rated loading shown in Table 1, shoulders need to bear firmly against the mating part. A steel washer or spacer, not to exceed one thread pitch, may be required to put the plane of the eye in the direction of the load when the shoulder is seated. See Fig. 2.

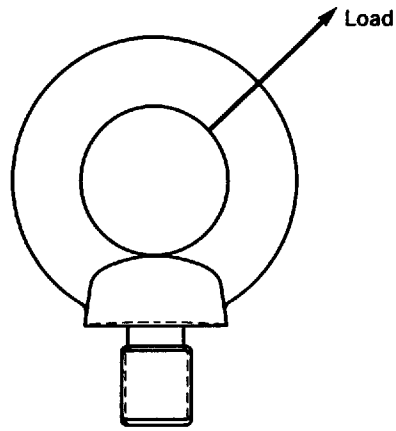

(a) Recommended

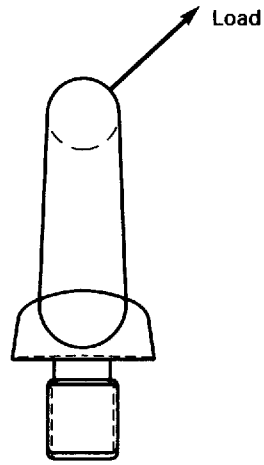

(b) Not Recommended

FIG. 2 NONAXIAL LOAD APPLICATION

Copyright ASME International
Provided by IHS under license with ASME
No reproduction or networking permitted without license from IHS
Not for Resale

ASME B18.15.2M-1998

1 Introductory Notes 9

2 Requirements 10

Figure

1 Identification Location 11

Tables

1 Rated, Proof, and Breaking Loads 10

2 Dimensions 11

Appendices

A Periodic Inspection 13

B Application 15

Copyright ASME International
Provided by IHS under license with ASME
No reproduction or networking permitted without license from IHS
Not for Resale

METRIC STRAIGHT SHANK LIFTING EYES

1 INTRODUCTORY NOTES

1.1 Scope

This Standard covers dimensional and axial load requirements for forged metric straight shank threaded lifting eyes, previously referred to as eyebolts, intended primarily for lifting applications.

The inclusion of dimensional data in this Standard is not intended to imply that all sizes described are production stock items. Consumers should consult with suppliers concerning lists of stock production items.

1.2 Comparison With ISO

There is no ISO standard for this type of lifting eye. Capacities for these lifting eyes exceed ISO 3266, which is a standard for lifting eyes with flanges.

1.3 Dimensions

All dimensions in this Standard are in millimeters (mm).

1.4 Terminology

For definitions of terms relating to fasteners or component features used in this Standard, refer to ANSI B18.12.

1.5 Referenced Standards

ASME B1.3M, Screw Thread Gaging Systems for Dimensional Acceptability — Inch and Metric Screw Threads (UN, UNR, UNJ, M, and MJ)[1]

ASME B1.13M, Metric Screw Threads — M Profile[1]

ANSI B18.12, Glossary of Terms for Mechanical Fasteners[1]

ASME B18.15.1M, Forged Lifting Eyes

ASME B18.18.1M, Inspection and Quality Assurance for General Purpose Fasteners[1]

ASME B18.18.2M, Inspection and Quality Assurance for High-Volume Machine Assembly Fasteners[1]

ASME B18.18.3M, Inspection and Quality Assurance for Special Purpose Fasteners[1]

ASME B18.18.4M, Inspection and Quality Assurance for Fasteners for Highly Specialized Engineered Applications[1]

ASME B18.24.1, Part Identification Number (PIN) Code System Standard for B18 Externally Threaded Products[1]

Publisher: The American Society of Mechanical Engineers, Three Park Avenue, New York, NY 10016-5990; Order Department: 22 Law Drive, Box 2300, Fairfield, NJ 07007-2300

ASTM A 489, Standard Specification for Carbon Steel Lifting Eyes

ASTM F 541, Standard Specification for Alloy Steel Eyebolts

Publisher: American Society for Testing and Materials, 100 Barr Harbor Drive, West Conshohocken, PA 19428

ISO 3266, Eyebolts for General Lifting Purposes[1]

Publisher: International Organization for Standardization, 1 rue de Varembé, Case postale 56, CH-1121, Genève 20, Switzerland/Suisse

1.6 Designation

Lifting eyes conforming to this Standard shall be designated by the following data, preferably in the sequence shown:

(a) ASME document number
(b) product name
(c) nominal thread size
(d) ASTM material

or optionally by ASME B18.24.1.

EXAMPLE:
ASME B18.15.2M Lifting Eye M12 ASTM A 489 Steel, or T152NG10MMUNN489ANAA1

[1] May also be obtained from American National Standards Institute, 11 West 42nd Street, New York, NY 10036.

Copyright ASME International
Provided by IHS under license with ASME
No reproduction or networking permitted without license from IHS
Not for Resale

2 REQUIREMENTS

2.1 Material

The material requirements for general purpose carbon steel lifting eyes used between 0 and 135°C are covered by ASTM A 489. These lifting eyes have higher proof loads and breaking strengths than the lifting eyes covered by ASME B18.15.1M. Lifting eyes requiring improved toughness or intended primarily for temperature applications to –40°C are covered by ASTM F 541. When other materials are required, the material shall be as agreed upon by the manufacturer and user.

2.2 Mechanical and Performance Requirements

Axial proof and breaking load requirements are specified in Table 1. Tests shall be performed in accordance with ASTM A 489.

2.3 Threads

Threads shall be coarse thread series Class 6g as specified in ASME B1.13M. Threads shall be inspected in accordance with ASME B1.3M System 21 unless otherwise specified.

2.4 Dimensions

Dimensions are listed in Table 2.

2.5 Marking

Lifting eye markings shall include the manufacturer's identification, part thread size, and rating. All marks shall be raised. The preferred location for markings is shown in Fig. 1.

2.6 Inspection and Quality Assurance

Unless otherwise specified, acceptability of lifting eyes shall be determined in accordance with ASME B18.18.1M.

2.6.1 Performance Certification. Unless otherwise specified, proof load and minimum breaking load specified in Table 1 shall be inspected to ASME B18.18.2M level B.

2.6.2 Dimensional Characteristics. Unless otherwise specified, the following designated dimensional characteristics shall be inspected in accordance with ASME B18.18.2M and shall be within their specified limits:

Characteristic	Inspection Level
Thread Acceptability	C
Visual Inspection (shall include nicks and cracks)	C

If verifiable in-process inspection is used according to ASME B18.18.3M or ASME B18.18.4M, the final inspection level sample sizes of those respective standards shall apply.

For nondesignated dimensional characteristics, the provisions of ASME B18.18.1M shall apply. Should a nondesignated dimension be determined to be outside its specified limits, it shall be deemed conforming to this Standard if the user who is the installer accepts the dimension, based on form, fit, and function considerations.

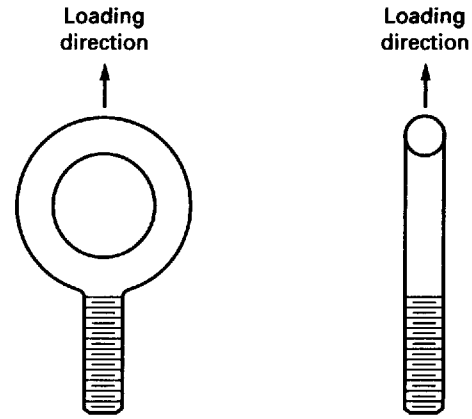

TABLE 1 RATED, PROOF, AND BREAKING LOADS

Thread Size	Maximum Lifting Capacity, kg	Proof Load, kN	Minimum Breaking Load, kN
M6	180	3.6	9.0
M8	330	6.6	16.5
M10	520	10.4	26.0
M12	760	15.2	38.0
M16	1 420	24.8	71.0
M20	2 200	44.0	110
M24	3 200	64.0	159
M30	5 000	100	250
M36	7 300	146	365
M42	10 000	200	500
M48	13 200	264	660
M56	18 200	364	910
M64	24 200	484	1 210

Copyright ASME International
Provided by IHS under license with ASME
No reproduction or networking permitted without license from IHS
Not for Resale

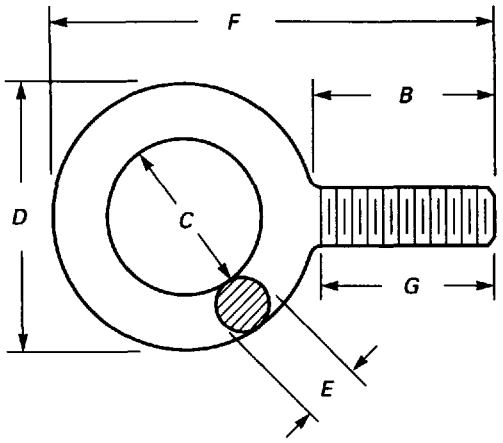

TABLE 2 DIMENSIONS

Thread Size	Eye Inside Diameter *C*, Min.	Eye Thickness *E*, Max.	Eye Outside Diameter *D*, Max.	Overall Length *F*	Shank Length *B*, Ref.	Thread Length *G*, Min.
M6	17.5	6	21	57	25	20
M8	20	8	39	67	28	22
M10	24	10	47	79	32	25
M12	28	12	55	89	36	27
M16	34	16	69	103	44	34
M20	36	19	78	128	50	38
M24	43	23	93	153	60	45
M30	50	28	111	186	75	58
M36	62	34	135	220	85	65
M42	70	39	153	148	95	75
M48	78	45	174	174	100	80
M56	86	52	196	306	110	90
M64	97	60	223	348	125	105

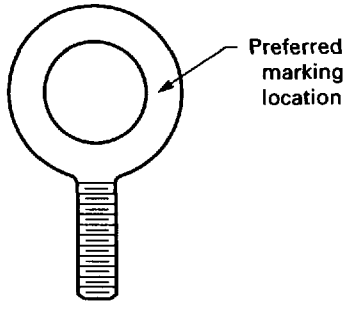

FIG. 1 IDENTIFICATION LOCATION

Copyright ASME International
Provided by IHS under license with ASME
No reproduction or networking permitted without license from IHS
Not for Resale

NONMANDATORY APPENDIX A
PERIODIC INSPECTION

Lifting eyes should be free from visible defects that might affect serviceability. Lifting eyes should be routinely visually inspected for such defects as:

(a) bent or distorted eye or shank

(b) nicks and gouges

(c) obvious wear

(d) worn and/or distorted threads

(e) cracks

If any of these defects are visible, the lifting eye should be removed from service and destroyed.

Copyright ASME International
Provided by IHS under license with ASME
No reproduction or networking permitted without license from IHS
Not for Resale

NONMANDATORY APPENDIX B
APPLICATION

The following are some suggestions on the application of a lifting eye.

(a) Capabilities are based on loads being applied axially. See Table 1.

(b) Coatings are not recommended. Coatings such as painting, galvanizing, or plating cover flaws and interfere with inspection.

(c) To attain the rated capacities shown in Table 1, minimum thread shank length of engagement must be as follows:

(1) steel: one thread diameter;

(2) cast iron, brass, bronze: 1.5 thread diameters;

(3) aluminum, magnesium, zinc, plastic: two thread diameters.

Copyright ASME International
Provided by IHS under license with ASME
No reproduction or networking permitted without license from IHS
Not for Resale

AMERICAN NATIONAL STANDARDS FOR BOLTS, NUTS, RIVETS, SCREWS WASHERS, AND SIMILAR FASTENERS

Small Solid Rivets ..... B18.1.1-1972(R1995)
Large Rivets ..... B18.1.2-1972(R1995)
Metric Small Solid Rivets ..... B18.1.3M-1983(R1995)
Square and Hex Bolts and Screws (Inch Series) B18.2.1-1996
Square and Hex Nuts (Inch Series) ..... B18.2.2-1987(R1993)
Metric Hex Cap Screws ..... B18.2.3.1M-1979(R1995)
Metric Formed Hex Screws ..... B18.2.3.2M-1979(R1995)
Metric Heavy Hex Screws ..... B18.2.3.3M-1979(R1995)
Metric Hex Flange Screws ..... B18.2.3.4M-1984(R1995)
Metric Hex Bolts ..... B18.2.3.5M-1979(R1995)
Metric Heavy Hex Bolts ..... B18.2.3.6M-1979(R1995)
Metric Heavy Hex Structural Bolts ..... B18.2.3.7M-1979(R1995)
Metric Hex Lag Screws ..... B18.2.3.8M-1981(R1991)
Metric Heavy Hex Flange Screws ..... B18.2.3.9M-1984(R1995)
Square Head Bolts (Metric Series) B18.2.3.10M-1996
Metric Hex Nuts, Style 1 ..... B18.2.4.1M-1996
Metric Hex Nuts, Style 2 ..... B18.2.4.2M-1979(R1995)
Metric Slotted Hex Nuts ..... B18.2.4.3M-1979(R1995)
Metric Hex Flange Nuts ..... B18.4.4.4M-1982(R1993)
Metric Hex Jam Nuts ..... B18.2.4.5M-1979(R1998)
Metric Heavy Hex Nuts ..... B18.2.4.6M-1979(R1998)
Fasteners for Use in Structural Applications B18.2.6-1996
Socket Cap, Shoulder, and Set Screws, Hex and Spline Keys (Inch Series) B18.3-1998
Socket Head Cap Screws (Metric Series) ..... B18.3.1M-1986(R1993)
Metric Series Hexagon Keys and Bits ..... B18.3.2M-1979(R1998)
Hexagon Socket Head Shoulder Screws (Metric Series) ..... B18.3.3M-1986(R1993)
Hexagon Socket Button Head Cap Screws (Metric Series) ..... B18.3.4M-1986(R1993)
Hexagon Socket Flat Countersunk Head Cap Screws (Metric Series) ..... B18.3.5M-1986(R1993)
Metric Series Socket Set Screws ..... B18.3.6M-1986(R1993)
Round Head Bolts (Inch Series) ..... B18.5-1990(R1998)
Metric Round Head Short Square Neck Bolts B18.5.2.1M-1996
Metric Round Head Square Neck Bolts ..... B18.5.2.2M-1982(R1993)
Round Head Square Neck Bolts With Large Head (Metric Series) ..... B18.5.2.3M-1990(R1998)
Wood Screws (Inch Series) ..... B18.6.1-1981(R1997)
Slotted Head Cap Screws, Square Head Set Screws, and Slotted Headless Set Screws B18.6.2-1998
Machine Screws and Machine Screw Nuts ..... B18.6.3-1972(R1997)
Thread Forming and Thread Cutting Tapping Screws and
Metallic Drive Screws (Inch Series) ..... B18.6.4-1981(R1997)
Metric Thread Forming and Thread Cutting Tapping Screws ..... B18.6.5M-1986(R1993)
Metric Machine Screws ..... B18.6.7M-1985(R1993)
General Purpose Semi-Tubular Rivets, Full Tubular Rivets, Split Rivets and Rivet Caps ..... B18.7-1972(R1992)
Metric General Purpose Semi-Tubular Rivets ..... B18.7.1M-1984(R1992)
Clevis Pins and Cotter Pins (Inch Series) B18.8.1-1994
Taper Pins, Dowel Pins, Straight Pins, Grooved Pins, and Spring Pins (Inch Series) B18.8.2-1995
Spring Pins — Coiled Type (Metric Series) B18.8.3M-1995
Spring Pins — Slotted (Metric Series) B18.8.4M-1994
Machine Dowel Pins — Hardened Ground (Metric Series) B18.8.5M-1994
Cotter Pins (Metric Series) B18.8.6M-1995
Headless Clevis Pins (Metric Series) B18.8.7M-1994
Headed Clevis Pins (Metric Series) B18.8.8M-1994
Grooved Pins (Metric Series) B18.8.9M-1998
Plow Bolts (Inch Series) B18.9-1996
Track Bolts and Nuts ..... B18.10-1982(R1992)
Miniature Screws ..... B18.11-1961(R1992)

Copyright ASME International
Provided by IHS under license with ASME
No reproduction or networking permitted without license from IHS
Not for Resale

Glossary of Terms for Mechanical Fasteners ..... B18.12-1962(R1991)
Screw and Washer Assemblies — Sems (Inch Series) B18.13-1996
Screw and Washer Assemblies: Sems (Metric Series) B18.13.1M-1998
Forged Eyebolts ..... B18.15-1985(R1995)
Metric Lifting Eyes B18.15M-1998
Mechanical and Performance Requirements for Prevailing-Torque Type
Steel Metric Hex Nuts and Hex Flange Nuts ..... B18.16.1M-1979(R1995)
Torque-Tension Test Requirements for Prevailing-Torque Type
Steel Metric Hex Nuts and Hex Flange Nuts ..... B18.16.2M-1979(R1995)
Dimensional Requirements for Prevailing-Torque Type Steel
Metric Hex Nuts and Hex Flange Nuts B18.16.3M-1998
Inspection and Quality Assurance for General Purpose Fasteners ..... B18.18.1M-1987(R1993)
Inspection and Quality Assurance for High-Volume Machine Assembly Fasteners ..... B18.18.2M-1987(R1993)
Inspection and Quality Assurance for Special Purpose Fasteners ..... B18.18.3M-1987(R1993)
Inspection and Quality Assurance for Fasteners for Highly Specialized
Engineered Applications ..... B18.18.4M-1987(R1993)
Inspection and Quality Assurance Plan Requiring In-Process Inspection and Controls B18.18.5M-1998
Quality Assurance Plan for Fasteners Produced in a Third Party Accreditation System B18.18.6M-1998
Quality Assurance Plan for Fasteners Produced in a Customer Approved Control Plan B18.18.7M-1998
Lock Washers (Inch Series) B18.21.1-1994
Lock Washers (Metric Series) B18.21.2M-1994
Metric Plain Washers ..... B18.22M-1981(R1990)
Plain Washers ..... B18.22.1-1965(R1998)
Part Identifying Number (PIN) Code System Standard for B18 Externally
Threaded Products B18.24.1-1996
Part Identifying Number (PIN) Code System Standard for B18 Internally
Threaded Products B18.24.2-1998
Part Identifying Number (PIN) Code System Standard for B18 Nonthreaded Products B18.24.3-1998
Square and Rectangular Keys and Keyways B18.25.1M-1996
Woodruff Keys and Keyways B18.25.2M-1996
Square and Rectangular Keys and Keyways: Width Tolerances and
Deviations Greater Than Basic Size B18.25.3M-1998
Helical Coil Screw Thread Inserts (Inch Series) — Free Running and Screw Locking B18.29.1-1993

The ASME Publications Catalog shows a complete list of all the Standards published by the Society. For a complimentary catalog, or the latest information about our publications, call 1-800-THE-ASME (1-800-843-2763).

Copyright ASME International
Provided by IHS under license with ASME
No reproduction or networking permitted without license from IHS
Not for Resale

ASME Services

ASME is committed to developing and delivering technical information. At ASME's Information Central, we make every effort to answer your questions and expedite your orders. Our representatives are ready to assist you in the following areas:

ASME Press
Codes & Standards
Credit Card Orders
IMechE Publications
Meetings & Conferences
Member Dues Status
Member Services & Benefits
Other ASME Programs
Payment Inquiries
Professional Development
Short Courses
Publications
Public Information
Self-Study Courses
Shipping Information
Subscriptions/Journals/Magazines
Symposia Volumes
Technical Papers

How can you reach us? It's easier than ever!

There are four options for making inquiries* or placing orders. Simply mail, phone, fax, or E-mail us and an Information Central representative will handle your request.

Mail	*Call Toll Free*	*Fax-24 hours*	*E-Mail-24 hours*
ASME	**US & Canada:** 800-THE-ASME	973-882-1717	Infocentral
22 Law Drive, Box 2900	(800-843-2763)	973-882-5155	@asme.org
Fairfield, New Jersey	**Mexico:** 95-800-THE-ASME		
07007-2900	(95-800-843-2763)		
	Universal: 973-882-1167		

* Information Central staff are not permitted to answer inquiries about the technical content of this code or standard. Information as to whether or not technical inquiries are issued to this code or standard is shown on the copyright page. All technical inquiries must be submitted in writing to the staff secretary. Additional procedures for inquiries may be listed within.

Copyright ASME International
Provided by IHS under license with ASME
No reproduction or networking permitted without license from IHS
Not for Resale