D-15-05

AMERICAN NATIONAL STANDARD

Large Rivets

ANSI B18.1.2 - 1972

(REVISION OF B18.4–1960)

1/2 Inch Nominal Diameter and Larger

SECRETARIAT

SOCIETY OF AUTOMOTIVE ENGINEERS
THE AMERICAN SOCIETY OF MECHANICAL ENGINEERS

PUBLISHED BY

THE AMERICAN SOCIETY OF MECHANICAL ENGINEERS

United Engineering Center 345 East 47th Street New York, N. Y. 10017

Copyright ASME International
Provided by IHS under license with ASME
No reproduction or networking permitted without license from IHS

Not for Resale

Any part of this standard may be quoted. Credit lines should read: "Extracted from American National Standard, Large Rivets (ANSI B18.1.2–1972), with the permission of the publisher The American Society of Mechanical Engineers, United Engineering Center, 345 East 47th Street, New York, N. Y. 10017."

Copyright ©, 1972, by
THE AMERICAN SOCIETY OF MECHANICAL ENGINEERS
Printed in U.S.A.

Copyright ASME International
Provided by IHS under license with ASME
No reproduction or networking permitted without license from IHS

Not for Resale

FOREWORD

American National Standards Committee B18 for the standardization of bolts, screws, nuts, rivets and similar fasteners was organized in March 1922, as Sectional Committee B18, under the aegis of the American Engineering Standards Committee (later the American Standards Association, then the United States of America Standards Institute and, as of October 6, 1969, the American National Standards Institute, Inc.) with the Society of Automotive Engineers and the American Society of Mechanical Engineers as joint sponsors. Subcommittee 1 was subsequently appointed and charged with responsibility for the standardization of rivets.

Initial efforts of the Subcommittee were directed at development of a standard covering solid rivets of less than 1/2 inch nominal diameter which was approved and designated B18a–1927. This was followed by a standard covering tinners, coopers and belt rivets that was adopted under the designation B18g–1928.

Extensive research, periods of experimentation, and consultation with the American Society for Testing and Materials and the Boiler Code Committee of the American Society of Mechanical Engineers during the ensuing years culminated in Subcommittee acceptance, in 1936, of a proposal covering rivets 1/2 inch nominal size and larger. This proposal, following approval by the Sectional Committee and sponsor organizations was designated an American Standard, B18.4–1937, in March of 1937.

Following reorganization of Sectional Committee B18, in 1947, Subcommittee 1 was requested to review the documents under its jurisdiction to bring them up to date and, as necessary, develop them into complete product standards. A thorough study of the B18.4 standard was conducted over meetings of the Subcommittee held on October 9, 1947, June 4, 1948 and December 1, 1948. This resulted in a recommendation that the pan head rivets should be changed to conform with the American Bureau of Shipping and U. S. Navy design which all manufacturers, except one, were found to be producing. A proposal dated September 1959, reflecting this change and additional refinements was approved by letter ballot of the B18 Committee and sponsors, and presented to the American Standards Association for approval and designation as an American Standard. This was given on August 30, 1950.

The B18 Committee by letter ballot of August 13, 1956 approved reaffirmation of the B18.4–1950 document and, following approval by the sponsors, this status was confirmed by the American Standards Association on May 27, 1957.

A proposed revision dated August, 1959 was approved by the Sectional Committee, the sponsors, and the American Standards Association and was designated an American Standard on March 9, 1960.

During 1970, Subcommittee 1 developed a proposed revision incorporating changes to the nomenclature and the method of dimensioning applicable to countersunk type heads and a complete editorial revamping of the format to conform with related documents. Following letter ballot approval by the B18 Committee and sponsor organizations, the revision was submitted to the American National Standards Institute and was designated an American National Standard, ANSI B18.1.2–1972, on January 28, 1972.

Copyright ASME International
Provided by IHS under license with ASME
No reproduction or networking permitted without license from IHS

Not for Resale

AMERICAN NATIONAL STANDARDS COMMITTEE B18
Standardization of Bolts, Nuts, Rivets, Screws and Similar Fasteners

OFFICERS

R. P. Trowbridge, *Chairman*
F. V. Kupchak, *Vice-Chairman*
R. B. Belford, *Secretary*

COMMITTEE PERSONNEL

AEROSPACE INDUSTRIES ASSOCIATION OF AMERICA
J. F. Cramer, The Boeing Company, Seattle, Washington
S. J. Turek, Grumman Aircraft Engineering Corporation, Bethpage, Long Island, New York

AMERICAN INSTITUTE OF INDUSTRIAL ENGINEERS
R. T. Kelly, Hitchcock Publishing Company, Wheaton, Illinois

AMERICAN SOCIETY FOR TESTING AND MATERIALS
J. W. Caum, American Society for Testing and Materials, Philadelphia, Pennsylvania

AMERICAN SOCIETY OF AGRICULTURAL ENGINEERS
F. C. Ewert, Deere & Company, Moline, Illinois
J. H. Zich, Alternate, Ford Motor Company, Birmingham, Michigan

AMERICAN SOCIETY OF MECHANICAL ENGINEERS, THE
A. R. Machell, Jr., Xerox Corporation, Rochester, New York
F. P. Tisch, Voi-Shan Manufacturing Company, Culver City, California

ASSOCIATION OF AMERICAN RAILROADS
J. G. Britton, Association of American Railroads Research Center, Chicago, Illinois
C. C. Herrick, New York Central System, New York, New York

FARM AND INDUSTRIAL EQUIPMENT INSTITUTE
F. C. Ewert, Deere & Company, Moline, Illinois

INDUSTRIAL FASTENERS INSTITUTE
R. H. Akers, The National Screw and Manufacturing Company, Mentor, Ohio
R. B. Belford, Industrial Fasteners Institute, Cleveland, Ohio
A. R. Breed, The Lamson & Sessions Company, Cleveland, Ohio
T. C. Baumgartner, Standard Pressed Steel Company, Jenkintown, Pennsylvania
W. S. Christopher, Illinois Tool Work, Inc., Elgin, Illinois
D. A. Garrison, Russell, Burdsall & Ward Bolt & Nut Company, Chicago, Illinois
N. J. Gruca, Illinois Tool Works, Inc., Elgin, Illinois
R. C. Kozlik, National Lock Fasteners, Rockford, Illinois
R. L. Riley, Bethlehem Steel Company, Lebanon, Pennsylvania
L. E. Saraz, Jr., Republic Steel Corporation, Cleveland, Ohio
L. G. Selden, Armco Steel Corporation, Kansas City, Missouri
R. W. Groover, Alternate, Bethlehem Steel Company, Lebanon, Pennsylvania
F. R. Ling, Alternate, Russell, Burdsall & Ward Bolt & Nut Company, Port Chester, New York
C. B. Waud, Alternate, Illinois Tool Works, Inc., Elgin, Illinois

MANUFACTURERS STANDARDIZATION SOCIETY OF THE VALVE AND FITTINGS INDUSTRY
J. R. Welshman, Grinnell Corporation, Providence, Rhode Island

Copyright ASME International
Provided by IHS under license with ASME
No reproduction or networking permitted without license from IHS
Not for Resale

NATIONAL ELECTRICAL MANUFACTURERS ASSOCIATION
F. V. Kupchak, Westinghouse Electric Corporation, Pittsburgh, Pennsylvania
J. B. Levy, General Electric Company, Schenectady, New York
W. A. Samsonoff, Alternate, National Electrical Manufacturers Association, New York, New York

NATIONAL ELEVATOR INDUSTRY, INC.
S. Seth Roberts, Otis Elevator Company, New York, New York

NATIONAL MACHINE TOOL BUILDERS' ASSOCIATION
D. R. Stoner, Jr., Landis Machine Company, Waynesboro, Pennsylvania

SERVICE TOOLS INSTITUTE
J. R. Haynes, J. H. Williams Company, Buffalo, New York

SOCIETY OF AUTOMOTIVE ENGINEERS
D. R. Bowen, General Motors Corporation, Warren, Michigan
E. E. Heibeck, Chrysler Corporation, Detroit, Michigan
K. G. Roth, Mack Trucks, Inc., Allentown, Pennsylvania
R. P. Trowbridge, General Motors Technical Center, Warren, Michigan
S. E. Mallen, Ford Motor Company, Dearborn, Michigan

SOCKET SCREW PRODUCTS BUREAU
Ernest Heldmann, Holo-Krome Company, Hartford, Connecticut
Paul Pick, Allen Manufacturing Company, Hartford West, Connecticut

TELEPHONE GROUP, THE
M. C. Berryman, Western Electric Company, Inc., Chicago, Illinois
R. H. Van Horn, Bell Telephone Laboratory, Columbus, Ohio
F. P. Balacek, Alternate, Bell Telephone Laboratory, Columbus, Ohio

TUBULAR & SPLIT RIVET COUNCIL
R. M. Gordon, Milford Rivet & Machine Company, Milford, Connecticut

U. S. DEPARTMENT OF THE AIR FORCE
F. L. Calkins, Aeronautical Systems Div., Wright-Patterson AFB, Ohio

U. S. DEPARTMENT OF THE ARMY
R. C. Engelmann, Army Weapons Command, Rock Island, Illinois
R. F. Scherer, Alternate, Army Weapons Command, Rock Island, Illinois

U. S. DEPARTMENT OF COMMERCE
To be appointed

U. S. DEPARTMENT OF DEFENSE
J. D. Jones, Defense Industrial Supply Center, Philadelphia, Pennsylvania
Martin Betof, Alternate, Defense Industrial Supply Center, Philadelphia, Pennsylvania

U. S. DEPARTMENT OF THE NAVY
C. A. Fulesdy, Naval Ship Systems Command, Washington, D.C.

U. S. MACHINE, CAP, WOOD AND TAPPING SCREW BUREAUS
S. C. Adamek, Pheoll Manufacturing Company, Chicago, Illinois
R. M. Byrne, U.S. Screw Service Bureaus, New York, New York
T. J. Ferry, E. W. Ferry Screw Products Company, Inc., Cleveland, Ohio
Wilfred Kay, Parker-Kalon Corporation, Clifton, New Jersey
Herman Muenchinger, Continental Screw Company, New Bedford, Massachusetts
K. G. Ringland, Central Screw Company, Keene, New Hampshire
C. C. Tucker, The Reed & Prince Manufacturing Company, Worcester, Massachusetts
Louis Zanin, Elco Industries, Inc., Rockford, Illinois
Paul Foytho, Alternate, Harvey Hubbel, Inc., Bridgeport, Connecticut
E. F. Tauscher, Alternate, Pheoll Manufacturing Company, Chicago, Illinois

INDIVIDUAL MEMBERS
H. C. Erdman, Shaker Heights, Ohio
F. E. Graves, Fairfield, Connecticut
Louis Oest, Teaneck, New Jersey
C. A. Werme, Midland Screw Corporation, Chicago, Illinois

Copyright ASME International
Provided by IHS under license with ASME
No reproduction or networking permitted without license from IHS
Not for Resale

PERSONNEL OF SUBCOMMITTEE NO. 1

ON SOLID RIVETS

R. W. Groover, Chairman, Bethlehem Steel Corporation, 1 Cumberland St., Lebanon, Pennsylvania 17042
J. W. Axness, Deere & Company, Technical Center, 3300 River Drive, Moline, Illinois 61265
J. A. Diemer, Champion Commercial Industries, Inc., 5137 Indianapolis Blvd., East Chicago, Indiana 46312
D. A. Garrison, Russell, Burdsall & Ward Bolt and Nut Company, Rock Falls, Illinois 61071
T. R. Higgins, American Institute of Steel Construction, Inc., 101 Park Ave., New York, N. Y. 10017
F. Hobbs, Modulus Corporation, P. O. Box 2619, Pittsburgh, Pennsylvania 15230
R. E. McFarland, Townsend Company, Fasteners Div., Box 71, Ellwood City, Pennsylvania 16117
E. J. Ruble, Association of American Railroads, 3140 South Federal St., Chicago, Illinois 60661
L. G. Selden, Armco Steel Corporation, 7000 Roberts, Kansas City, Missouri 64125
S. J. Vollmer, Ford Motor Company, The American Road, Dearborn, Michigan 48121

Copyright ASME International
Provided by IHS under license with ASME
No reproduction or networking permitted without license from IHS
Not for Resale

CONTENTS

Page

1 INTRODUCTORY NOTES 1

2 GENERAL DATA 2

TABLES

Table 1 Dimensions of Button Head Rivets (Manufactured Shape) 3

Table 2 Dimensions of High Button Head (Acorn) Rivets, (Manufactured Shape) . . . 4

Table 3 Dimensions of Cone Head Rivets (Manufactured Shape) 5

Table 4 Dimensions of Flat Countersunk Head Rivets (Manufactured Shape). 6

Table 5 Dimensions of Oval Countersunk Head Rivets (Manufactured Shape) 7

Table 6 Dimensions of Pan Head Rivets (Manufactured Shape) 8

Table 7 Dimensions of Swell-Neck Rivets (Manufactured Shape) 9

Table 8 Dimensions of Button Head Rivet Manufactured Heads After Driving and Driven Heads, Also Hold-On (Dolly Bar) and Rivet Set Impressions 10

Table 9 Dimensions of High Button Head (Acorn) Rivet Manufactured Heads After Driving and Driven Heads, Also Hold-On (Dolly Bar) and Rivet Set Impressions 11

Table 10 Dimensions of Cone Head Rivet Manufactured Heads After Driving and Driven Heads, Also Hold-On (Dolly Bar) and Rivet Set Impressions 12

Table 11 Dimensions of Pan Head Rivet Manufactured Heads After Driving and Driven Heads, Also Hold-On (Dolly Bar) and Rivet Set Impressions 13

APPENDIX I, Formulas for Rivet Dimensions 14

APPENDIX II, Formulas for Dimensions of Manufactured Heads After Driving, Driven Heads, and Hold-On (Dolly Bar) and Rivet Set Impressions . . . 17

Copyright ASME International
Provided by IHS under license with ASME
No reproduction or networking permitted without license from IHS

Not for Resale

ANSI B18.1.2–1972

AMERICAN NATIONAL STANDARD

LARGE RIVETS

1/2 INCH NOMINAL DIAMETER AND LARGER

1 INTRODUCTORY NOTES

1.1 SCOPE

1.1.1 This standard covers complete general and dimensional data for those types of large solid rivets recognized as "American National Standard" together with dimensional data applicable to manufactured heads after driving, driven heads, and hold-on (dolly bar) and rivet set impressions. Also included are appendixes covering formulas on which dimensional data are based. It should be understood, however, that where questions arise concerning acceptance of product, the dimensions in the tables shall govern over recalculation by formula.

1.1.2 The inclusion of dimensional data in this standard is not intended to imply that all of the products described are stock production sizes. Consumers should consult with manufacturers concerning the availability of products.

1.2 RIVETS

1.2.1 Head Types. The head types covered by this standard are designated, respectively, as button head, high button head (acorn), cone head, flat countersunk head, oval countersunk head and pan head. All other head types for large solid rivets shall be considered special.

1.2.2 Shank Diameters. The diameters of rivet shanks as given for the respective types of rivets in the tables shall be standard. This, however, does not preclude the manufacture or use of rivets having other diameters required for special applications.

1.2.3 Head Proportions. The dimensions for heads of rivets specified in the respective tables shall be standard. Other head proportions shall be considered special. Where non-standard diameter rivets are required for special applications, the proportions of heads shall preferably be based on the formulations given in the appendixes.

1.2.4 Swell Necks. Large rivets are normally furnished with straight shanks up to the head. When specified, however, the swell neck included in Table 7 of this standard is applicable to all standard large rivets except the flat countersunk head and oval countersunk head.

1.3 MANUFACTURED HEADS AFTER DRIVING, DRIVEN HEADS, AND HOLD-ON (DOLLY BAR) AND RIVET SET IMPRESSIONS

Dimensions of manufactured heads after driving for button head, high button head, cone head and pan head types of rivets and for hold-on (dolly bar) impressions are included in this standard for design reference purposes. These dimensions apply also to driven heads of rivets as formed from the end and to the corresponding rivet set impressions. See Figure 1 for explanation of terms.

1.4 DIMENSIONS

All dimensions in this standard are given in inches, unless otherwise stated.

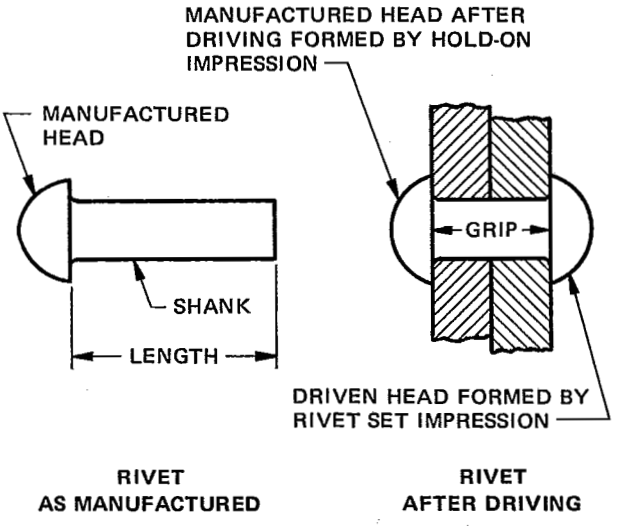

FIGURE 1 RIVET TERMS

1.5 TERMINOLOGY

The nomenclature applicable to rivets as manufactured and after driving is depicted in Figure 1. For definitions of other terms relating to fasteners or

Copyright ASME International
Provided by IHS under license with ASME
No reproduction or networking permitted without license from IHS
Not for Resale

component features thereof used in this standard refer to American National Standard, Glossary of Terms for Mechanical Fasteners, ANSI B18.12.

1.6 RELATED STANDARDS

It should be noted that standards for small solid rivets, tubular and split rivets, and other related fasteners are published under separate cover as listed on the back sheet of this standard.

2 GENERAL DATA

2.1 UNDERHEAD FILLETS

Rivets other than countersunk head types shall be furnished with a definite fillet under the head. The radius of fillet shall not exceed 0.062 in.

2.2 LENGTH

2.2.1 Measurement. The length of rivet shall be measured, parallel to the axis of rivet, from the extreme end to the plane of the bearing surface for rivets having flat bearing surface type heads, or to the intersection of the top surface of head with the head diameter for rivets having countersunk type heads.

2.2.2 Length Tolerance. The tolerance on length of rivets shall be as tabulated below:

Nominal Rivet Size	1/2 and 5/8	3/4 and 7/8	1 thru 1 3/4
Nominal Rivet Length	Tolerance on Length		
Thru 6 in.	±0.03	±0.06	±0.09
Over 6 in.	±0.06	±0.12	±0.19

2.3 POINTS

Rivets shall have plain sheared ends, suitable for the purposes of driving that end satisfactorily.

2.4 MATERIAL

Suitable materials for steel rivets are covered by the following ASTM Specifications which can be obtained from the American Society for Testing and Materials, 1916 Race St., Philadelphia, Pennsylvania 19103.

A31 Specifications for Boiler Rivet Steel (American National Standard, ANSI G28.1)

A131 Specifications for Rivet Steel for Ships

A152 Specifications for Wrought-Iron Rivets and Rivet Rounds

A502 – Grade 1 Carbon Steel Structural Rivets for General Purposes (formerly A141)

A502 – Grade 2 Carbon Manganese Steel Rivets for Use with High-Strength Carbon and High-Strength Low Alloy Steels (formerly A195)

2.5 FINISHES

Unless otherwise specified, rivets shall be supplied with a natural (as processed) finish, unplated or uncoated.

2.6 QUALITY

The finished rivets shall be free from defects affecting their serviceability.

2.7 DESIGNATION

When specifying rivets, the following data shall be included in the designation and shall appear in the sequence shown:

Nominal Size (fraction or decimal equivalent)

Length (fraction or two-place decimal equivalent)

Type of Rivet (including head style)

Type of Neck (if required)

Material

Finish (if required)

Examples:

1/2 x 2 Button Head Steel Rivet

.625 x 6.00 High Button Head Swell Neck Steel Rivet

1 3/8 x 7 Oval Countersunk Head Steel Rivet, Zinc Plated

Copyright ASME International
Provided by IHS under license with ASME
No reproduction or networking permitted without license from IHS

Not for Resale

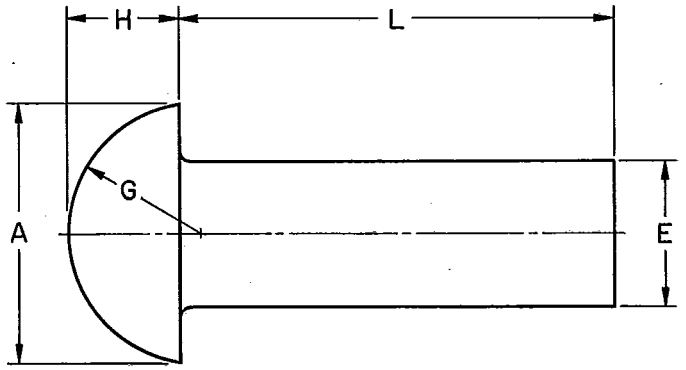

Table 1 Dimensions of Button Head Rivets (Manufactured Shape)

Nominal Size[1] or Basic Shank Diameter		E		A			H		G
		Shank Diameter		Head Diameter			Head Height		Head Radius
		Max	Min	Basic	Max	Min	Max	Min (Basic)	Basic
1/2	0.500	0.520	0.478	0.875	0.938	0.844	0.406	0.375	0.443
5/8	0.625	0.655	0.600	1.094	1.157	1.063	0.500	0.469	0.553
3/4	0.750	0.780	0.725	1.312	1.390	1.281	0.593	0.562	0.664
7/8	0.875	0.905	0.850	1.531	1.609	1.500	0.687	0.656	0.775
1	1.000	1.030	0.975	1.750	1.828	1.719	0.781	0.750	0.885
1 1/8	1.125	1.160	1.098	1.969	2.063	1.938	0.891	0.844	0.996
1 1/4	1.250	1.285	1.223	2.188	2.282	2.157	0.985	0.938	1.107
1 3/8	1.375	1.415	1.345	2.406	2.500	2.375	1.078	1.031	1.217
1 1/2	1.500	1.540	1.470	2.625	2.719	2.594	1.188	1.125	1.328
1 5/8	1.625	1.665	1.588	2.844	2.938	2.813	1.282	1.219	1.439
1 3/4	1.750	1.790	1.713	3.062	3.171	3.031	1.375	1.312	1.549

[1] Where specifying nominal size in decimals, zeros preceding decimal shall be omitted.

For additional requirements refer to General Data on Page 2.

Copyright ASME International
Provided by IHS under license with ASME
No reproduction or networking permitted without license from IHS

Not for Resale

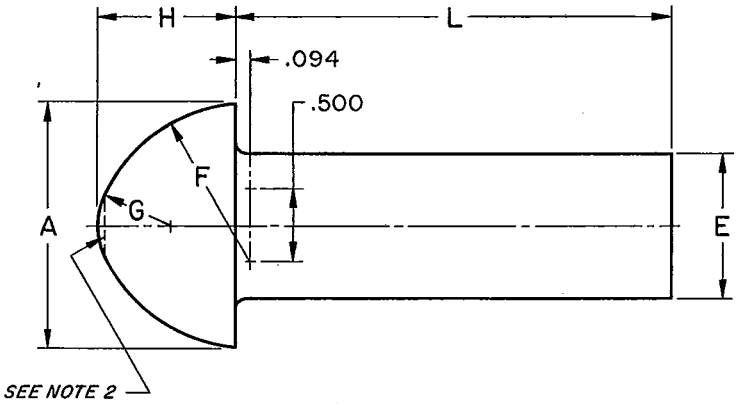

Table 2 Dimensions of High Button Head (Acorn) Rivets (Manufactured Shape)

Nominal Size[1] or Basic Shank Diameter		E		A			H			F	G
		Shank Diameter		Head Diameter			Head Height			Head Side Radius	Head Top Radius
		Max	Min	Basic	Max	Min	Basic	Max	Min	Basic	Basic
1/2	0.500	0.520	0.478	0.781	0.844	0.750	0.500	0.531	0.484	0.656	0.094
5/8	0.625	0.655	0.600	0.969	1.032	0.938	0.594	0.625	0.578	0.750	0.188
3/4	0.750	0.780	0.725	1.156	1.234	1.125	0.688	0.719	0.657	0.844	0.282
7/8	0.875	0.905	0.850	1.344	1.422	1.313	0.781	0.812	0.750	0.937	0.375
1	1.000	1.030	0.975	1.531	1.609	1.500	0.875	0.906	0.844	1.031	0.469
1 1/8	1.125	1.160	1.098	1.719	1.813	1.688	0.969	1.016	0.938	1.125	0.563
1 1/4	1.250	1.285	1.223	1.906	2.000	1.875	1.062	1.109	1.031	1.218	0.656
1 3/8	1.375	1.415	1.345	2.094	2.188	2.063	1.156	1.203	1.125	1.312	0.750
1 1/2	1.500	1.540	1.470	2.281	2.375	2.250	1.250	1.313	1.219	1.406	0.844
1 5/8	1.625	1.665	1.588	2.469	2.563	2.438	1.344	1.407	1.313	1.500	0.938
1 3/4	1.750	1.790	1.713	2.656	2.765	2.625	1.438	1.501	1.407	1.594	1.032

[1] Where specifying nominal size in decimals, zeros preceding decimal shall be omitted.
[2] A slight flat at the crest of the head shall be permissible providing specified head height limits are maintained.

For additional requirements refer to General Data on Page 2.

Copyright ASME International
Provided by IHS under license with ASME
No reproduction or networking permitted without license from IHS

Not for Resale

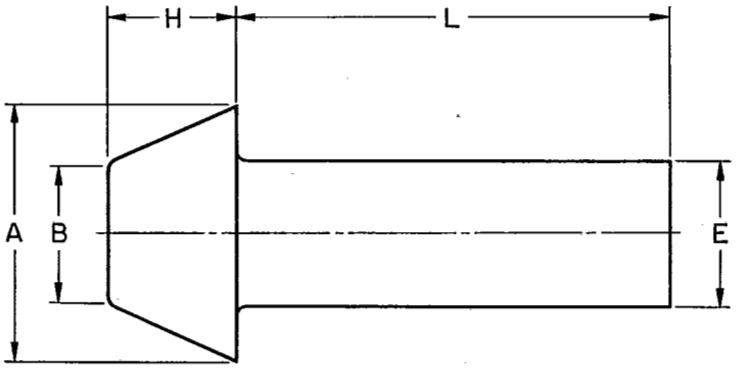

Table 3 Dimensions of Cone Head Rivets (Manufactured Shape)

Nominal Size[1] or Basic Shank Diameter		E		A			B			H	
		Shank Diameter		Major Head Diameter			Minor Head Diameter			Head Height	
		Max	Min	Basic	Max	Min	Basic	Max	Min	Max	Min (Basic)
1/2	0.500	0.520	0.478	0.875	0.938	0.844	0.469	0.532	0.438	0.469	0.438
5/8	0.625	0.655	0.600	1.094	1.157	1.063	0.586	0.649	0.555	0.578	0.547
3/4	0.750	0.780	0.725	1.312	1.390	1.281	0.703	0.781	0.672	0.687	0.656
7/8	0.875	0.905	0.850	1.531	1.609	1.500	0.820	0.898	0.789	0.797	0.766
1	1.000	1.030	0.975	1.750	1.828	1.719	0.938	1.016	0.907	0.906	0.875
1 1/8	1.125	1.160	1.098	1.969	2.063	1.938	1.055	1.149	1.024	1.031	0.984
1 1/4	1.250	1.285	1.223	2.188	2.282	2.157	1.172	1.266	1.141	1.141	1.094
1 3/8	1.375	1.415	1.345	2.406	2.500	2.375	1.290	1.384	1.259	1.250	1.203
1 1/2	1.500	1.540	1.470	2.625	2.719	2.594	1.406	1.500	1.375	1.375	1.312
1 5/8	1.625	1.665	1.588	2.844	2.938	2.813	1.524	1.618	1.493	1.485	1.422
1 3/4	1.750	1.790	1.713	3.062	3.171	3.031	1.641	1.750	1.610	1.594	1.531

[1] Where specifying nominal size in decimals, zeros preceding decimal shall be omitted.

For additional requirements refer to General Data on Page 2.

Copyright ASME International
Provided by IHS under license with ASME
No reproduction or networking permitted without license from IHS

Not for Resale

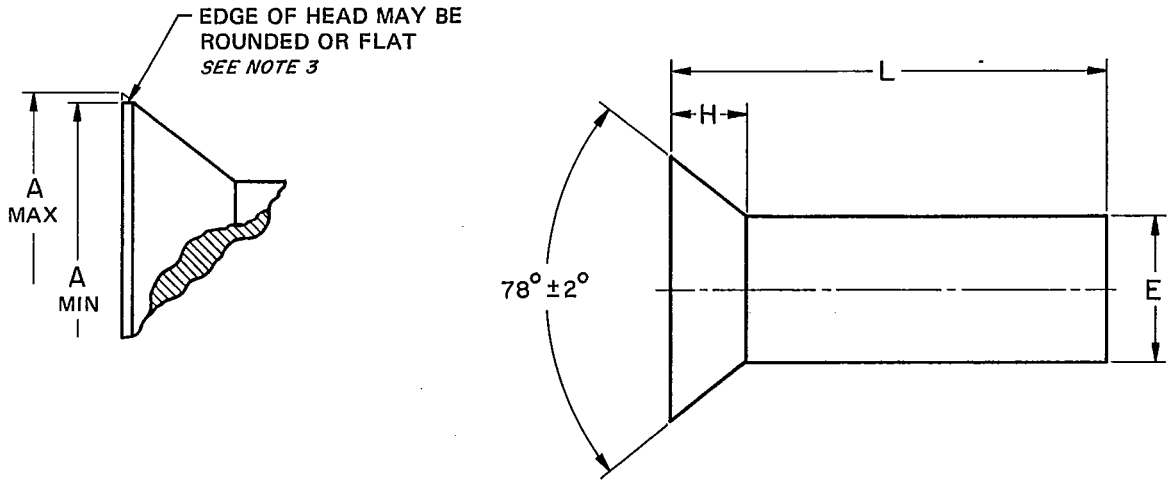

Table 4 Dimensions of Flat Countersunk Head Rivets (Manufactured Shape)

Nominal Size[1] or Basic Shank Diameter	E		A		H
	Shank Diameter		Head Diameter		Head Height
	Max	Min	Max[2]	Min[3]	Ref[4]
1/2 0.500	0.520	0.478	0.936	0.872	0.260
5/8 0.625	0.655	0.600	1.194	1.112	0.339
3/4 0.750	0.780	0.725	1.421	1.322	0.400
7/8 0.875	0.905	0.850	1.647	1.532	0.460
1 1.000	1.030	0.975	1.873	1.745	0.520
1 1/8 1.125	1.160	1.098	2.114	1.973	0.589
1 1/4 1.250	1.285	1.223	2.340	2.199	0.650
1 3/8 1.375	1.415	1.345	2.567	2.426	0.710
1 1/2 1.500	1.540	1.470	2.793	2.652	0.771
1 5/8 1.625	1.665	1.588	3.019	2.878	0.831
1 3/4 1.750	1.790	1.713	3.262	3.121	0.901

[1] Where specifying nominal size in decimals, zeros preceding decimal shall be omitted.

[2] Sharp edged head. The tabulated maximum values represent between 97.5 and 98.7 per cent of the diameter extended to a theoretical sharp edge, calculated from the maximum shank diameter and 80° included angle.

[3] Rounded or flat edged irregular shaped head. Since the heads of these rivets are not machined or trimmed, the circumference may be somewhat irregular and edges may be rounded or flat.

[4] Head Height, H, is given for reference purposes only.

For additional requirements refer to General Data on Page 2.

Copyright ASME International
Provided by IHS under license with ASME
No reproduction or networking permitted without license from IHS

Not for Resale

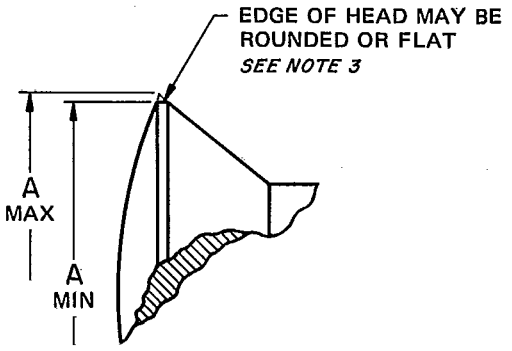

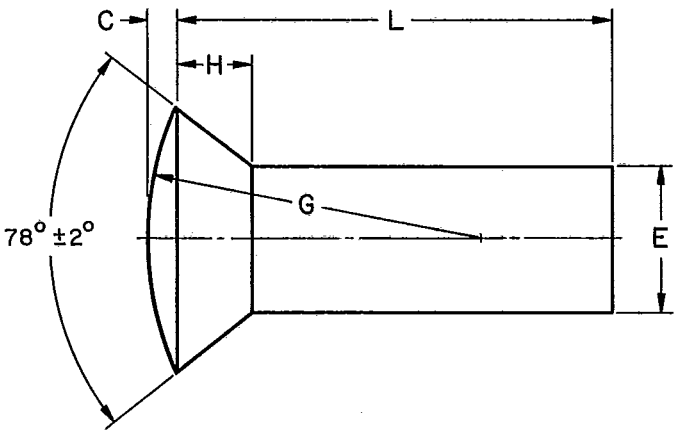

Table 5 Dimensions of Oval Countersunk Head Rivets[5]
(Manufactured Shape)

Nominal Size[1] or Basic Shank Diameter		E		A		H	C	G
		Shank Diameter		Head Diameter		Head Height	Oval Crown Height	Oval Crown Radius
		Max	Min	Max[2]	Min[3]	Ref[4]	Basic	Basic
1/2	0.500	0.520	0.478	0.936	0.872	0.260	0.095	1.125
5/8	0.625	0.655	0.600	1.194	1.112	0.339	0.119	1.406
3/4	0.750	0.780	0.725	1.421	1.322	0.400	0.142	1.688
7/8	0.875	0.905	0.850	1.647	1.532	0.460	0.166	1.969
1	1.000	1.030	0.975	1.873	1.745	0.520	0.190	2.250
1 1/8	1.125	1.160	1.098	2.114	1.973	0.589	0.214	2.531
1 1/4	1.250	1.285	1.223	2.340	2.199	0.650	0.238	2.812
1 3/8	1.375	1.415	1.345	2.567	2.426	0.710	0.261	3.094
1 1/2	1.500	1.540	1.470	2.793	2.652	0.771	0.285	3.375
1 5/8	1.625	1.665	1.588	3.019	2.878	0.831	0.309	3.656
1 3/4	1.750	1.790	1.713	3.262	3.121	0.901	0.332	3.938

[1] Where specifying nominal size in decimals, zeros preceding decimal shall be omitted.
[2] Sharp edged head. The tabulated maximum values represent between 97.5 and 98.7 per cent of the diameter extended to a theoretical sharp edge calculated from the maximum shank diameter and 80° included angle.
[3] Rounded or flat edged irregular shaped head. Since the heads of these rivets are not machined or trimmed, the circumference may be somewhat irregular and edges may be rounded or flat.
[4] Head height, H, is given for reference purposes only.
[5] This rivet was previously designated as a Round Top Countersunk Head.

For additional requirements refer to General Data on Page 2.

Copyright ASME International
Provided by IHS under license with ASME
No reproduction or networking permitted without license from IHS

Not for Resale

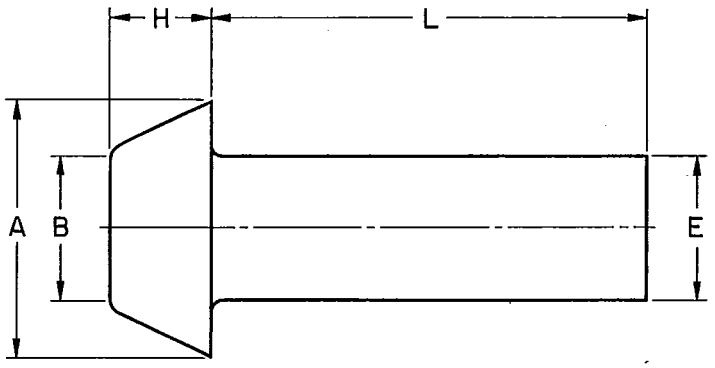

Table 6 Dimensions of Pan Head Rivets (Manufactured Shape)

Nominal Size[1] or Basic Shank Diameter		E		A			B			H	
		Shank Diameter		Major Head Diameter			Minor Head Diameter			Head Height	
		Max	Min	Basic	Max	Min	Basic	Max	Min	Max	Min (Basic)
1/2	0.500	0.520	0.478	0.800	0.863	0.769	0.500	0.563	0.469	0.381	0.350
5/8	0.625	0.655	0.600	1.000	1.063	0.969	0.625	0.688	0.594	0.469	0.438
3/4	0.750	0.780	0.725	1.200	1.278	1.169	0.750	0.828	0.719	0.556	0.525
7/8	0.875	0.905	0.850	1.400	1.478	1.369	0.875	0.953	0.844	0.643	0.612
1	1.000	1.030	0.975	1.600	1.678	1.569	1.000	1.078	0.969	0.731	0.700
1 1/8	1.125	1.160	1.098	1.800	1.894	1.769	1.125	1.219	1.094	0.835	0.788
1 1/4	1.250	1.285	1.223	2.000	2.094	1.969	1.250	1.344	1.219	0.922	0.875
1 3/8	1.375	1.415	1.345	2.200	2.294	2.169	1.375	1.469	1.344	1.009	0.962
1 1/2	1.500	1.540	1.470	2.400	2.494	2.369	1.500	1.594	1.469	1.113	1.050
1 5/8	1.625	1.665	1.588	2.600	2.694	2.569	1.625	1.719	1.594	1.201	1.138
1 3/4	1.750	1.790	1.713	2.800	2.909	2.769	1.750	1.859	1.719	1.288	1.225

[1] Where specifying nominal size in decimals, zeros preceding decimal shall be omitted.

For additional requirements refer to General Data on Page 2.

Copyright ASME International
Provided by IHS under license with ASME
No reproduction or networking permitted without license from IHS

Not for Resale

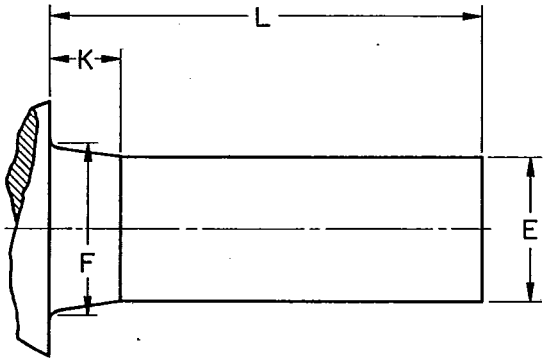

Table 7 Dimensions of Swell-Neck Rivets[2] (Manufactured Shape)

Nominal Size[1] or Basic Shank Diameter		E		F		K
		Shank Diameter		Neck Diameter Under Head		Neck Length
		Max	Min	Max (Basic)	Min	Basic
1/2	0.500	0.520	0.478	0.563	0.543	0.250
5/8	0.625	0.655	0.600	0.688	0.658	0.312
3/4	0.750	0.780	0.725	0.813	0.783	0.375
7/8	0.875	0.905	0.850	0.938	0.908	0.438
1	1.000	1.030	0.975	1.063	1.033	0.500
1 1/8	1.125	1.160	1.098	1.188	1.153	0.562
1 1/4	1.250	1.285	1.223	1.313	1.278	0.625
1 3/8	1.375	1.415	1.345	1.438	1.398	0.688
1 1/2	1.500	1.540	1.470	1.563	1.523	0.750
1 5/8	1.625	1.665	1.588	1.688	1.648	0.812
1 3/4	1.750	1.790	1.713	1.813	1.773	0.875

[1] Where specifying nominal size in decimals, zeros preceding decimal shall be omitted.
[2] The swell neck is applicable to all standard large rivets except the flat countersunk head and oval countersunk head types.

For additional requirements refer to General Data on Page 2.

Copyright ASME International
Provided by IHS under license with ASME
No reproduction or networking permitted without license from IHS

Not for Resale

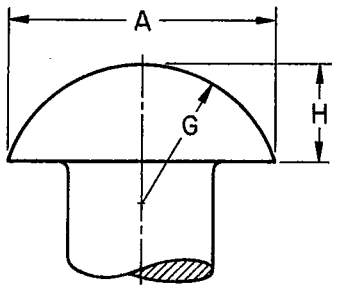

MANUFACTURED HEAD
AFTER DRIVING, ALSO
DRIVEN HEAD

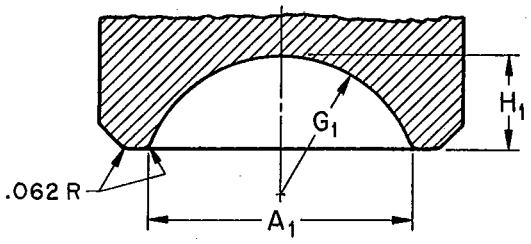

HOLD-ON (DOLLY BAR),
ALSO RIVET SET
IMPRESSION

Table 8 Dimensions of Button Head Rivet Manufactured Heads After Driving and Driven Heads, Also Hold-On (Dolly Bar) and Rivet Set Impressions

Nominal Size[1] or Basic Shank Diameter		Manufactured Heads After Driving and Driven Heads			Hold-On (Dolly Bar) and Rivet Set Impressions		
		A	H	G	A_1	H_1	G_1
		Head Diameter	Head Height	Head Top Radius	Impression Diameter	Impression Depth	Impression Base Radius
		Basic	Basic	Basic	Basic	Basic	Basic
1/2	0.500	0.922	0.344	0.484	0.906	0.312	0.484
5/8	0.625	1.141	0.438	0.594	1.125	0.406	0.594
3/4	0.750	1.375	0.516	0.719	1.344	0.484	0.719
7/8	0.875	1.594	0.609	0.844	1.578	0.562	0.844
1	1.000	1.828	0.688	0.953	1.812	0.641	0.953
1 1/8	1.125	2.062	0.781	1.078	2.031	0.719	1.078
1 1/4	1.250	2.281	0.859	1.188	2.250	0.797	1.188
1 3/8	1.375	2.516	0.953	1.312	2.469	0.875	1.312
1 1/2	1.500	2.734	1.031	1.438	2.703	0.953	1.438
1 5/8	1.625	2.969	1.125	1.547	2.922	1.047	1.547
1 3/4	1.750	3.203	1.203	1.672	3.156	1.125	1.672

[1] Where specifying nominal size in decimals, zeros preceding decimal shall be omitted.

For additional requirements refer to General Data on Page 2.

Copyright ASME International
Provided by IHS under license with ASME
No reproduction or networking permitted without license from IHS

Not for Resale

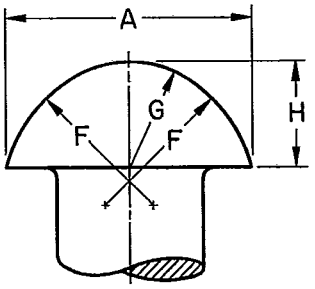

MANUFACTURED HEAD AFTER DRIVING, ALSO DRIVEN HEAD

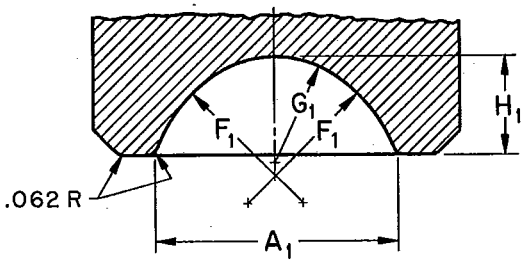

HOLD-ON (DOLLY BAR), ALSO RIVET SET IMPRESSION

Table 9 Dimensions of High Button Head (Acorn) Rivet Manufactured Heads After Driving and Driven Heads, Also Hold-On (Dolly Bar) and Rivet Set Impressions

Nominal Size[1] or Basic Shank Diameter		Manufactured Heads After Driving and Driven Heads				Hold-On (Dolly Bar) and Rivet Set Impressions			
		A	H	F	G	A_1	H_1	F_1	G_1
		Head Diameter	Head Height	Head Side Radius	Head Top Radius	Impression Diameter	Impression Depth	Impression Side Radius	Impression Base Radius
		Basic	Basic	Basic	Basic	Basic	Basic	Basic	Basic
1/2	0.500	0.875	0.375	0.562	0.375	0.859	0.344	0.562	0.375
5/8	0.625	1.062	0.453	0.672	0.453	1.047	0.422	0.672	0.453
3/4	0.750	1.250	0.531	0.797	0.531	1.234	0.500	0.797	0.531
7/8	0.875	1.438	0.609	0.922	0.609	1.422	0.578	0.922	0.609
1	1.000	1.625	0.688	1.031	0.688	1.609	0.656	1.031	0.688
1 1/8	1.125	1.812	0.766	1.156	0.766	1.797	0.719	1.156	0.766
1 1/4	1.250	2.000	0.844	1.266	0.844	1.984	0.797	1.266	0.844
1 3/8	1.375	2.188	0.938	1.406	0.938	2.172	0.875	1.406	0.938
1 1/2	1.500	2.375	1.000	1.500	1.000	2.344	0.953	1.500	1.000
1 5/8	1.625	2.562	1.094	1.641	1.094	2.531	1.031	1.641	1.094
1 3/4	1.750	2.750	1.172	1.750	1.172	2.719	1.109	1.750	1.172

1Where specifying nominal size in decimals, zeros preceding decimal shall be omitted.

For additional requirements refer to General Data on Page 2.

Copyright ASME International
Provided by IHS under license with ASME
No reproduction or networking permitted without license from IHS

Not for Resale

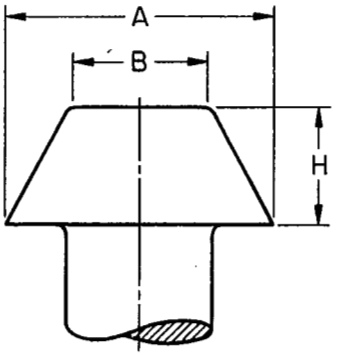

MANUFACTURED HEAD
AFTER DRIVING, ALSO
DRIVEN HEAD

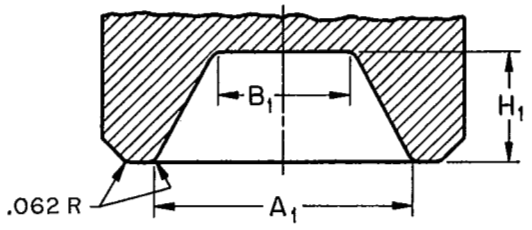

HOLD-ON (DOLLY BAR),
ALSO RIVET SET
IMPRESSION

Table 10 Dimensions of Cone Head Rivet Manufactured Heads After Driving and Driven Heads, Also Hold-On (Dolly Bar) and Rivet Set Impressions

Nominal Size[1] or Basic Shank Diameter		Manufactured Heads After Driving and Driven Heads			Hold-On (Dolly Bar) and Rivet Set Impressions		
		A	B	H	A_1	B_1	H_1
		Major Head Diameter	Minor Head Diameter	Head Height	Impression Diameter	Bottom Impression Diameter	Impression Depth
		Basic	Basic	Basic	Basic	Basic	Basic
1/2	0.500	0.922	0.469	0.406	0.891	0.469	0.391
5/8	0.625	1.141	0.594	0.516	1.109	0.594	0.484
3/4	0.750	1.375	0.703	0.625	1.328	0.703	0.578
7/8	0.875	1.594	0.828	0.719	1.562	0.828	0.688
1	1.000	1.828	0.938	0.828	1.781	0.938	0.781
1 1/8	1.125	2.063	1.063	0.938	2.000	1.063	0.875
1 1/4	1.250	2.281	1.172	1.031	2.219	1.172	0.969
1 3/8	1.375	2.516	1.297	1.141	2.453	1.297	1.078
1 1/2	1.500	2.734	1.406	1.250	2.672	1.406	1.172
1 5/8	1.625	2.969	1.531	1.344	2.891	1.531	1.266
1 3/4	1.750	3.203	1.641	1.453	3.109	1.641	1.375

[1] Where specifying nominal size in decimals, zeros preceding decimal shall be omitted.

For additional requirements refer to General Data on Page 2.

Copyright ASME International
Provided by IHS under license with ASME
No reproduction or networking permitted without license from IHS

Not for Resale

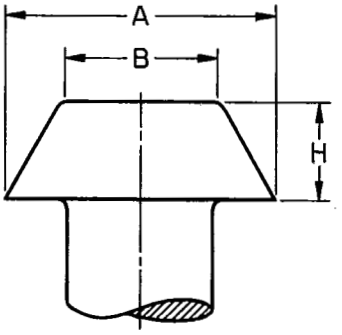

MANUFACTURED HEAD AFTER DRIVING, ALSO DRIVEN HEAD

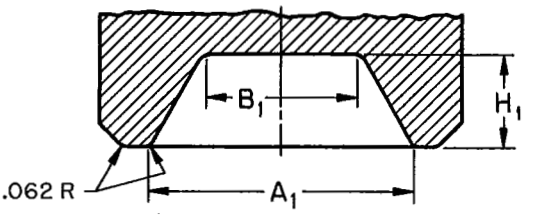

HOLD-ON (DOLLY BAR), ALSO RIVET SET IMPRESSION

Table 11 Dimensions of Pan Head Rivet Manufactured Heads After Driving and Driven Heads, Also Hold-On (Dolly Bar) and Rivet Set Impressions

Nominal Size[1] or Basic Shank Diameter		Manufactured Heads After Driving and Driven Heads			Hold-On (Dolly Bar) and Rivet Set Impressions		
		A	B	H	A_1	B_1	H_1
		Major Head Diameter	Minor Head Diameter	Head Height	Impression Diameter	Bottom Impression Diameter	Impression Depth
		Basic	Basic	Basic	Basic	Basic	Basic
1/2	0.500	0.844	0.500	0.328	0.812	0.500	0.297
5/8	0.625	1.047	0.625	0.406	1.031	0.625	0.375
3/4	0.750	1.266	0.750	0.484	1.234	0.750	0.453
7/8	0.875	1.469	0.875	0.578	1.438	0.875	0.531
1	1.000	1.687	1.000	0.656	1.641	1.000	0.609
1 1/8	1.125	1.891	1.125	0.734	1.844	1.125	0.688
1 1/4	1.250	2.094	1.250	0.812	2.047	1.250	0.766
1 3/8	1.375	2.312	1.375	0.906	2.250	1.375	0.844
1 1/2	1.500	2.516	1.500	0.984	2.453	1.500	0.906
1 5/8	1.625	2.734	1.625	1.062	2.656	1.625	0.984
1 3/4	1.750	2.938	1.750	1.141	2.875	1.750	1.063

[1]Where specifying nominal size in decimals, zeros preceding decimal shall be omitted.

For additional requirements refer to General Data on Page 2.

Copyright ASME International
Provided by IHS under license with ASME
No reproduction or networking permitted without license from IHS

Not for Resale

APPENDIX I

FORMULAS FOR RIVET DIMENSIONS

Where: D = Basic diameter of rivet shank.

Shank Diameter

Nominal Rivet Size	Shank Diameter		
	Basic	Tolerance	
		Plus	Minus
1/2	0.500	0.020	0.022
5/8	0.625	0.030	0.025
3/4	0.750	0.030	0.025
7/8	0.875	0.030	0.025
1	1.000	0.030	0.025
1 1/8	1.125	0.035	0.027
1 1/4	1.250	0.035	0.027
1 3/8	1.375	0.040	0.030
1 1/2	1.500	0.040	0.030
1 5/8	1.625	0.040	0.037
1 3/4	1.750	0.040	0.037

Button Head

Nominal Rivet Size	Head Diameter			Head Height			Head Radius
	Basic	Tolerance		Basic	Tolerance		Basic
		Plus	Minus		Plus	Minus	
1/2 and 5/8	A = 1.750D	0.063	0.031	H = 0.750D	0.031	0.000	G = 0.885D
3/4 thru 1		0.078	0.031		0.031	0.000	
1 1/8 thru 1 3/8		0.094	0.031		0.047	0.000	
1 1/2 and 1 5/8		0.094	0.031		0.063	0.000	
1 3/4		0.109	0.031		0.063	0.000	

High Button Head (Acorn)

Nominal Rivet Size	Head Diameter			Head Height			Head Side Radius	Head Top Radius
	Basic	Tolerance		Basic	Tolerance		Basic	Basic
		Plus	Minus		Plus	Minus		
1/2 and 5/8	A = 1.500D + 0.031	0.063	0.031	H = 0.750D + 0.125	0.031	0.016	F = 0.750D + 0.281	G = 0.750D – 0.281
3/4 thru 1		0.078	0.031		0.031	0.031		
1 1/8 thru 1 3/8		0.094	0.031		0.047	0.031		
1 1/2 and 1 5/8		0.094	0.031		0.063	0.031		
1 3/4		0.109	0.031		0.063	0.031		

Copyright ASME International
Provided by IHS under license with ASME
No reproduction or networking permitted without license from IHS
Not for Resale

FORMULAS FOR RIVET DIMENSIONS (CONTINUED)

Where: D = Basic diameter of rivet shank.

Cone Head

Nominal Rivet Size	Major Head Diameter			Minor Head Diameter			Head Height		
	Basic	Tolerance		Basic	Tolerance		Basic	Tolerance	
		Plus	Minus		Plus	Minus		Plus	Minus
1/2 and 5/8	A = 1.750D	0.063	0.031	B = 0.938D	0.063	0.031	H = 0.875D	0.031	0.000
3/4 thru 1		0.078	0.031		0.078	0.031		0.031	0.000
1 1/8 thru 1 3/8		0.094	0.031		0.094	0.031		0.047	0.000
1 1/2 and 1 5/8		0.094	0.031		0.094	0.031		0.063	0.000
1 3/4		0.109	0.031		0.109	0.031		0.063	0.000

Flat Countersunk Head

Nominal Rivet Size	Head Diameter			Head Height	
	Basic	Tolerance		Basic	Tolerance
		Plus	Minus		
1/2	A = 1.810D	0.031	0.033	$H = 1.192\left(\frac{\text{Max A} - D}{2}\right)$	Variations in this dimension are controlled by the shank and head diameters and the included angle of the head.
5/8		0.063	0.019		
3/4		0.063	0.036		
7/8		0.063	0.052		
1		0.063	0.065		
1 1/8		0.078	0.063		
1 1/4		0.078	0.063		
1 3/8		0.078	0.063		
1 1/2		0.078	0.063		
1 5/8		0.078	0.063		
1 3/4		0.094	0.047		

Oval Countersunk Head

Nominal Rivet Size	Head Diameter			Head Height		Crown Height	Head Radius
	Basic	Tolerance		Basic	Tolerance	Basic	Basic
		Plus	Minus				
1/2	A = 1.810D	0.031	0.033	$H = 1.192\left(\frac{\text{Max A} - D}{2}\right)$	Variations in this dimension are controlled by the shank and head diameters and the included angle of the head.	C = 0.190D	G = 2.250D
5/8		0.063	0.019				
3/4		0.063	0.036				
7/8		0.063	0.052				
1		0.063	0.065				
1 1/8		0.078	0.063				
1 1/4		0.078	0.063				
1 3/8		0.078	0.063				
1 1/2		0.078	0.063				
1 5/8		0.078	0.063				
1 3/4		0.094	0.047				

Copyright ASME International
Provided by IHS under license with ASME
No reproduction or networking permitted without license from IHS
Not for Resale

FORMULAS FOR RIVET DIMENSIONS (CONTINUED)

Where: D = Basic diameter of rivet shank.

Pan Head

Nominal Rivet Size	Major Head Diameter			Minor Head Diameter			Head Height		
	Basic	Tolerance		Basic	Tolerance		Basic	Tolerance	
		Plus	Minus		Plus	Minus		Plus	Minus
1/2 and 5/8	A = 1.600D	0.063	0.031	B = 1.000D	0.063	0.031	H = 0.700D	0.031	0.000
3/4 thru 1		0.078	0.031		0.078	0.031		0.031	0.000
1 1/8 thru 1 3/8		0.094	0.031		0.094	0.031		0.047	0.000
1 1/2 and 1 5/8		0.094	0.031		0.094	0.031		0.063	0.000
1 3/4		0.109	0.031		0.109	0.031		0.063	0.000

Swell Neck

Nominal Rivet Size	Neck Diameter			Neck Length
	Basic	Tolerance		Basic
		Plus	Minus	
1/2	F = D + 0.063	0.000	0.020	K = 0.500D
5/8 thru 1		0.000	0.030	
1 1/8 and 1 1/4		0.000	0.035	
1 3/8 thru 1 3/4		0.000	0.040	

Copyright ASME International
Provided by IHS under license with ASME
No reproduction or networking permitted without license from IHS
Not for Resale

APPENDIX II

FORMULAS FOR DIMENSIONS OF MANUFACTURED HEADS AFTER DRIVING, DRIVEN HEADS, AND HOLD-ON (DOLLY BAR) AND RIVET SET IMPRESSIONS

Where: D = Basic diameter of rivet shank.

Manufactured Heads After Driving and Driven Heads

Rivet Head Type	Head Major Diameter	Head Minor Diameter	Head Height	Head Top Radius	Head Side Radius
	Basic	Basic	Basic	Basic	Basic
Button Head	A = 1.827D	———	H = 0.688D	G = 0.954D	———
High Button Head (Acorn)	A = 1.500D + 0.125	———	H = 0.425A	G = 0.425A	F = 1.500H
Cone Head	A = 1.827D	B = 0.938D	H = 0.828D	———	———
Pan Head	A = 1.681D	B = 1.000D	H = 0.656D	———	———

Values shown in dimensional tables have been adjusted to the decimal equivalent of the nearest common fraction of an inch.

Hold-On (Dolly Bar) and Rivet Set Impressions

Rivet Head Type	Impression Diameter	Bottom Impression Diameter	Impression Depth	Impression Base Radius	Impression Side Radius
	Basic	Basic	Basic	Basic	Basic
Button Head	A_1 = 1.800D	———	H_1 = 0.641D	G_1 = 0.954D	———
High Button Head (Acorn)	A_1 = 1.485D + 0.124	———	H_1 = 0.400A	G_1 = 0.425A	F_1 = 1.500H
Cone Head	A_1 = 1.781D	B_1 = 0.938D	H_1 = 0.781D	———	———
Pan Head	A_1 = 1.639D	B_1 = 1.000D	H_1 = 0.609D	———	———

Values shown in dimensional tables have been adjusted to the decimal equivalent of the nearest common fraction of an inch.

Copyright ASME International
Provided by IHS under license with ASME
No reproduction or networking permitted without license from IHS
Not for Resale

AMERICAN NATIONAL STANDARDS FOR SCREW THREADS, BOLTS, NUTS, RIVETS, SCREWS AND SIMILAR FASTENERS

Unified Screw Threads	B1.1–1960
Unified Screw Threads-Metric Translation	B1.1a–1968
Gages and Gaging for Unified Screw Threads	B1.2–1966
Nomenclature, Definitions, and Letter Symbols for Screw Threads	B1.7–1965
Unified Miniature Screw Threads	B1.10–1958
Microscope Objective Thread	B1.11–1958
Class 5 Interference – Fit Thread	B1.12–1963
Small Solid Rivets (7/16 Inch Nominal Diameter and Smaller)	B18.1.1–1972
Large Rivets (1/2 Inch Nominal Diameter and Larger)	B18.1.2–1972
Square and Hex Bolts and Screws	B18.2.1–1972
Square and Hex Nuts	B18.2.2–1972
Socket Cap, Shoulder and Set Screws	B18.3–1969
Round Head Bolts	B18.5–1971
Wood Screws	B18.6.1–1972
Slotted Head Cap Screws, Square Head Set Screws, and Slotted Headless Set Screws	B18.6.2–1972
Machine Screws and Machine Screw Nuts	B18.6.3–1972
Slotted and Recessed Head Tapping Screws and Metallic Drive Screws	B18.6.4–1966
General Purpose Semi-Tubular Rivets, Full Tubular Rivets, Split Rivets and Rivet Caps	B18.7–1966
Plow Bolts	B18.9–1958 (R–1971)
Track Bolts and Nuts	B18.10–1963
Miniature Screws	B18.11–1961
Glossary of Terms for Mechanical Fasteners	B18.12–1962
Screw and Washer Assemblies – Sems	B18.13–1965
Forged Eyebolts	B18.15–1969
Wing Nuts, Thumb Screws, and Wing Screws	B18.17–1968
Lock Washers	B27.1–1965
Plain Washers	B27.2–1965
Beveled Washers	B27.4–1967
General Purpose Rectangular Uniform Section Retaining Rings	B27.5–1969

BINDERS FOR HOLDING STANDARDS ARE AVAILABLE.

A COMPLETE LIST OF AMERICAN NATIONAL STANDARDS PUBLISHED BY THE AMERICAN SOCIETY OF MECHANICAL ENGINEERS IS OBTAINABLE UPON REQUEST.

Copyright ASME International
Provided by IHS under license with ASME
No reproduction or networking permitted without license from IHS

Not for Resale