2595512 0077927 510

ASME-B17.2

ADOPTION NOTICE

ASME-B17.2, "Woodruff Keys and Keyseats," was adopted on October 3, 1994, for use by the Department of Defense (DoD). Proposed changes by DoD activities must be submitted to the DoD Adopting Activity: Commander, Defense Industrial Supply Center, Attn: DISC-E, Philadelphia, PA 19111-5096. DoD activities may obtain copies of this standard from the Standardization Document Order Desk, 700 Robbins Avenue, Building 4D, Philadelphia, PA 19111-5094. The private sector and other Government agencies may purchase copies from the American Society of Mechanical Engineers, 345 East 47th Street, New York, NY 10017.

Custodians:
Army - AR
Navy - YD
Air Force - 99

Adopting Activity
DLA - IS

FSC 5315

DISTRIBUTION STATEMENT A. Approved for public release; distribution is unlimited.

Copyright ASME International
Provided by IHS under license with ASME
No reproduction or networking permitted without license from IHS
Not for Resale

ASME B17.2 67 ■ 2595512 0014260 9 ■

J-17-21

U S A S T A N D A R D

WOODRUFF KEYS and KEYSEATS

USAS B17.2 - 1967

(Revision of USAS B17f-1930)

Sponsor

The American Society of Mechanical Engineers

Published by

THE AMERICAN SOCIETY OF MECHANICAL ENGINEERS

United Engineering Center 345 East 47th Street New York, N. Y. 10017

Copyright ASME International
Provided by IHS under license with ASME
No reproduction or networking permitted without license from IHS

Not for Resale

USA STANDARD

This USA Standard is one of nearly 3000 standards approved as American Standards by the American Standards Association. On August 24, 1966, the ASA was reconstituted as the United States of America Standards Institute. Standards approved as American Standards are now designated USA Standards. There is no change in their index identification or technical content.

Any part of this standard may be quoted. Credit lines should read: "Extracted from USA Standard Woodruff Keys and Keyseats (USAS B17.2–1967), with the permission of the publisher, The American Society of Mechanical Engineers, United Engineering Center, 345 East 47th Street, New York, New York 10017."

UDC 621.886.6

Copyright, 1968, by
THE AMERICAN SOCIETY OF MECHANICAL ENGINEERS
Printed in U.S.A.

Copyright ASME International
Provided by IHS under license with ASME
No reproduction or networking permitted without license from IHS

Not for Resale

Foreword

THIS standard on Woodruff Keys and Keyseats is a revision of USA Standard Woodruff Keys, Keyslots and Cutters, USAS B17f-1930, which standard was developed by sub-committee No. 5 of USA Standards Committee B17 on Shafting.

The sub-committee's initial work was started in 1925 and after numerous drafts and revisions was accepted by industry and designated by ASA (later changed to USASI) as an American Standard on December 31, 1930.

The B17f-1930 standard was reaffirmed in 1955 but it was recognized that the standard was not in conformity with current practice.

In 1962 the USA Standards Committee B17 was reactivated and a subcommittee developed and established this updated standard on Woodruff Keys and Keyseats which is in part a revision of B17f-1930.

Following approval by the USA Standards Committee B17 and the sponsor, the proposed revision was approved on September 18, 1967 by the USA Standards Institute, and redesignated B17.2–1967.

Copyright ASME International
Provided by IHS under license with ASME
No reproduction or networking permitted without license from IHS

Not for Resale

USA Standards Committee B17

Keys and Keyseats

OFFICERS

U. P. Jennings, *Chairman* Roger Daniels, *Secretary*

COMMITTEE MEMBERS

AMERICAN GEAR MANUFACTURERS ASSOCIATION
G. L. Scott, American Gear Manufacturers Association, Washington, D.C.
D. F. Wild, General Electric Company, Paterson, New Jersey

AMERICAN SOCIETY OF MECHANICAL ENGINEERS, THE
U. P. Jennings, E. I. DuPont de Nemours & Company, Inc., Wilmington, Delaware

AMERICAN SOCIETY OF TOOL AND MANUFACTURING ENGINEERS
W. M. Houck, New Holland Machine Company, New Holland, Pennsylvania

AMERICAN SPROCKET CHAIN MANUFACTURERS ASSOCIATION
R. A. Anderson, Roller Chain Division, Rex Chainbelt Company, Worcester, Massachusetts

CONVEYOR EQUIPMENT MANUFACTURERS ASSOCIATION
C. R. Davis, Rex Chainbelt Company, Milwaukee, Wisconsin
A. W. Lemmon, Alternate, The Jeffrey Manufacturing Company, Columbus, Ohio
R. C. Sollenberger, Alternate, Conveyor Equipment Manufacturers Association, Washington, D.C.

MECHANICAL POWER TRANSMISSION ASSOCIATION
D. C. Currier, Dodge Manufacturing Company, Mishawaka, Indiana

METAL CUTTING TOOL INSTITUTE
Perry L. Houser, Metal Cutting Tool Institute, New York, N.Y.

NATIONAL ELECTRICAL MANUFACTURERS ASSOCIATION
C. F. Schwan, Reliance Electric & Engineering, Cleveland, Ohio

SOCIETY OF AUTOMOTIVE ENGINEERS
E. J. Flewelling, Massey-Fergusson, Inc., Detroit, Michigan

INDIVIDUAL COMPANIES
J. W. Gillen, John Gillen Company, Cicero, Illinois
G. W. Andrews, Alternate, John Gillen Company, Cicero, Illinois
Roger Daniels, Formsprag Company, Warren, Michigan
W. C. Sheers, Standard Horse Nail Corporation, New Brighton, Pennsylvania

SUBCOMMITTEE 3, WOODRUFF KEYS

W. C. Sheers, *Chairman*, Standard Horse Nail Corp., P.O. Box 316, New Brighton, Pennsylvania 15066
E. J. Flewelling, Massey-Ferguson, Inc., P.O. Box 322 R.P.A., Detroit, Michigan 48232
P. L. Houser, Metal Cutting Tool Institute, 405 Lexington Avenue, New York, N.Y. 10017

Copyright ASME International
Provided by IHS under license with ASME
No reproduction or networking permitted without license from IHS
Not for Resale

USA STANDARD

Woodruff Keys and Keyseats

1. Scope

This standard covers nomenclature, definitions, identification number, dimensions and tolerances of Woodruff Keys and Keyseats.

It represents manufacturing practices for sizes and types from 1/16 in. × 1/4 in. thru 3/4 in. × 3 1/2 in. covering 66 listings.

Material, heat treatment, hardness or finish is not within the scope of this standard.

Dimensional features only are included.

2. Definitions

Woodruff Key. A demountable machinery part which, when assembled into keyseats, provides a positive means for transmitting torque between the shaft and hub.

Woodruff Key Number. An identification number by which the size of key may be readily determined (see footnote to Table 1).

Woodruff Keyseat — Shaft. The circular pocket in which the key is retained.

Woodruff Keyseat — Hub. An axially located rectangular groove in a hub. (Has been referred to as a keyway.)

Woodruff Keyseat Milling Cutter. An arbor type or shank type milling cutter normally used for milling Woodruff keyseats in shafts. (See USA Standard B5.3–1960 Milling Cutters for sizes and types).

Copyright ASME International
Provided by IHS under license with ASME
No reproduction or networking permitted without license from IHS

Not for Resale

USA STANDARD

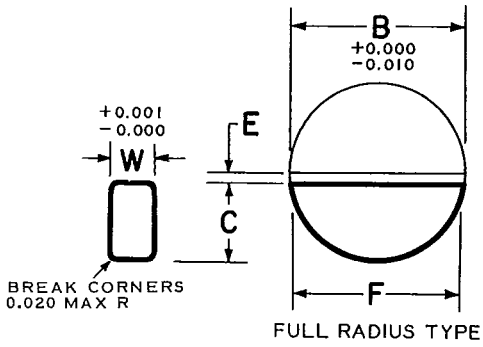

FULL RADIUS TYPE

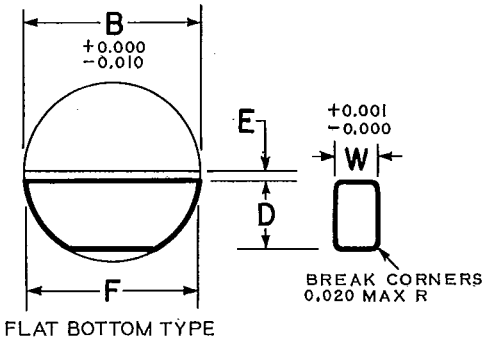

FLAT BOTTOM TYPE

Table 1 Woodruff Keys

Key No.	Nominal Key Size W × B	Actual Length F +0.000-0.010	Height of Key				Distance Below Center E
			C		D		
			Max	Min	Max	Min	
202	1/16 × 1/4	0.248	0.109	0.104	0.109	0.104	1/64
202.5	1/16 × 5/16	0.311	0.140	0.135	0.140	0.135	1/64
302.5	3/32 × 5/16	0.311	0.140	0.135	0.140	0.135	1/64
203	1/16 × 3/8	0.374	0.172	0.167	0.172	0.167	1/64
303	3/32 × 3/8	0.374	0.172	0.167	0.172	0.167	1/64
403	1/8 × 3/8	0.374	0.172	0.167	0.172	0.167	1/64
204	1/16 × 1/2	0.491	0.203	0.198	0.194	0.188	3/64
304	3/32 × 1/2	0.491	0.203	0.198	0.194	0.188	3/64
404	1/8 × 1/2	0.491	0.203	0.198	0.194	0.188	3/64
305	3/32 × 5/8	0.612	0.250	0.245	0.240	0.234	1/16
405	1/8 × 5/8	0.612	0.250	0.245	0.240	0.234	1/16
505	5/32 × 5/8	0.612	0.250	0.245	0.240	0.234	1/16
605	3/16 × 5/8	0.612	0.250	0.245	0.240	0.234	1/16
406	1/8 × 3/4	0.740	0.313	0.308	0.303	0.297	1/16
506	5/32 × 3/4	0.740	0.313	0.308	0.303	0.297	1/16
606	3/16 × 3/4	0.740	0.313	0.308	0.303	0.297	1/16
806	1/4 × 3/4	0.740	0.313	0.308	0.303	0.297	1/16
507	5/32 × 7/8	0.866	0.375	0.370	0.365	0.359	1/16
607	3/16 × 7/8	0.866	0.375	0.370	0.365	0.359	1/16
707	7/32 × 7/8	0.866	0.375	0.370	0.365	0.359	1/16
807	1/4 × 7/8	0.866	0.375	0.370	0.365	0.359	1/16
608	3/16 × 1	0.992	0.438	0.433	0.428	0.422	1/16
708	7/32 × 1	0.992	0.438	0.433	0.428	0.422	1/16
808	1/4 × 1	0.992	0.438	0.433	0.428	0.422	1/16
1008	5/16 × 1	0.992	0.438	0.433	0.428	0.422	1/16
1208	3/8 × 1	0.992	0.438	0.433	0.428	0.422	1/16
609	3/16 × 1 1/8	1.114	0.484	0.479	0.475	0.469	5/64
709	7/32 × 1 1/8	1.114	0.484	0.479	0.475	0.469	5/64
809	1/4 × 1 1/8	1.114	0.484	0.479	0.475	0.469	5/64
1009	5/16 × 1 1/8	1.114	0.484	0.479	0.475	0.469	5/64

Copyright ASME International
Provided by IHS under license with ASME
No reproduction or networking permitted without license from IHS
Not for Resale

WOODRUFF KEYS AND KEYSEATS

Table 1 Woodruff Keys (Concluded)

Key No.	Nominal Key Size W × B	Actual Length F +0.000-0.010	Height of Key				Distance Below Center E
			C		D		
			Max	Min	Max	Min	
610	3/16 × 1 1/4	1.240	0.547	0.542	0.537	0.531	5/64
710	7/32 × 1 1/4	1.240	0.547	0.542	0.537	0.531	5/64
810	1/4 × 1 1/4	1.240	0.547	0.542	0.537	0.531	5/64
1010	5/16 × 1 1/4	1.240	0.547	0.542	0.537	0.531	5/64
1210	3/8 × 1 1/4	1.240	0.547	0.542	0.537	0.531	5/64
811	1/4 × 1 3/8	1.362	0.594	0.589	0.584	0.578	3/32
1011	5/16 × 1 3/8	1.362	0.594	0.589	0.584	0.578	3/32
1211	3/8 × 1 3/8	1.362	0.594	0.589	0.584	0.578	3/32
812	1/4 × 1 1/2	1.484	0.641	0.636	0.631	0.625	7/64
1012	5/16 × 1 1/2	1.484	0.641	0.636	0.631	0.625	7/64
1212	3/8 × 1 1/2	1.484	0.641	0.636	0.631	0.625	7/64

All dimensions given are in inches.

The key numbers indicate nominal key dimensions. The last two digits give the nominal diameter B in eighths of an inch and the digits preceding the last two give the nominal width W in thirty-seconds of an inch.

Example:

No. 204 indicates a key 2/32 × 4/8 or 1/16 × 1/2.
No. 808 indicates a key 8/32 × 8/8 or 1/4 × 1.
No. 1212 indicates a key 12/32 × 12/8 or 3/8 × 1 1/2.

Copyright ASME International
Provided by IHS under license with ASME
No reproduction or networking permitted without license from IHS
Not for Resale

USA STANDARD

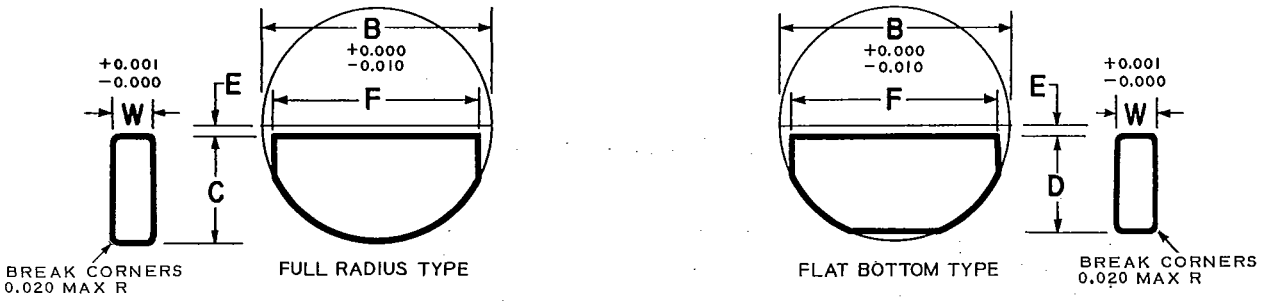

Table 2 Woodruff Keys

Key No.	Nominal Key Size W × B	Actual Length F +0.000-0.010	Height of Key				Distance Below Center E
			C		D		
			Max	Min	Max	Min	
617-1	3/16 × 2 1/8	1.380	0.406	0.401	0.396	0.390	21/32
817-1	1/4 × 2 1/8	1.380	0.406	0.401	0.396	0.390	21/32
1017-1	5/16 × 2 1/8	1.380	0.406	0.401	0.396	0.390	21/32
1217-1	3/8 × 2 1/8	1.380	0.406	0.401	0.396	0.390	21/32
617	3/16 × 2 1/8	1.723	0.531	0.526	0.521	0.515	17/32
817	1/4 × 2 1/8	1.723	0.531	0.526	0.521	0.515	17/32
1017	5/16 × 2 1/8	1.723	0.531	0.526	0.521	0.515	17/32
1217	3/8 × 2 1/8	1.723	0.531	0.526	0.521	0.515	17/32
822-1	1/4 × 2 3/4	2.000	0.594	0.589	0.584	0.578	25/32
1022-1	5/16 × 2 3/4	2.000	0.594	0.589	0.584	0.578	25/32
1222-1	3/8 × 2 3/4	2.000	0.594	0.589	0.584	0.578	25/32
1422-1	7/16 × 2 3/4	2.000	0.594	0.589	0.584	0.578	25/32
1622-1	1/2 × 2 3/4	2.000	0.594	0.589	0.584	0.578	25/32
822	1/4 × 2 3/4	2.317	0.750	0.745	0.740	0.734	5/8
1022	5/16 × 2 3/4	2.317	0.750	0.745	0.740	0.734	5/8
1222	3/8 × 2 3/4	2.317	0.750	0.745	0.740	0.734	5/8
1422	7/16 × 2 3/4	2.317	0.750	0.745	0.740	0.734	5/8
1622	1/2 × 2 3/4	2.317	0.750	0.745	0.740	0.734	5/8
1228	3/8 × 3 1/2	2.880	0.938	0.933	0.928	0.922	13/16
1428	7/16 × 3 1/2	2.880	0.938	0.933	0.928	0.922	13/16
1628	1/2 × 3 1/2	2.880	0.938	0.933	0.928	0.922	13/16
1828	9/16 × 3 1/2	2.880	0.938	0.933	0.928	0.922	13/16
2028	5/8 × 3 1/2	2.880	0.938	0.933	0.928	0.922	13/16
2228	11/16 × 3 1/2	2.880	0.938	0.933	0.928	0.922	13/16
2428	3/4 × 3 1/2	2.880	0.938	0.933	0.928	0.922	13/16

All dimensions given are in inches.

The key numbers indicate nominal key dimensions. The last two digits give the nominal diameter B in eighths of an inch and the digits preceding the last two give the nominal width W in thirty-seconds of an inch.

Example:

No. 617 indicates a key 6/32 × 17/8 or 3/16 × 2 1/8
No. 822 indicates a key 8/32 × 22/8 or 1/4 × 2 3/4
No. 1228 indicates a key 12/32 × 28/8 or 3/8 × 3 1/2

The key numbers with the -1 designation, while representing the nominal key size have a shorter length F and due to a greater distance below center E are less in height than the keys of the same number without the -1 designation.

Copyright ASME International
Provided by IHS under license with ASME
No reproduction or networking permitted without license from IHS
Not for Resale

WOODRUFF KEYS AND KEYSEATS

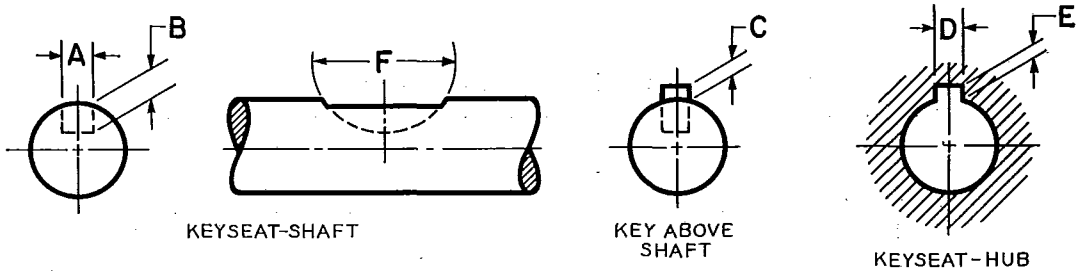

Table 3 Keyseat Dimensions

Key Number	Nominal Size Key	Keyseat — Shaft					Key Above Shaft	Keyseat — Hub	
		Width A*		Depth B	Diameter F		Height C	Width D	Depth E
		Min	Max	+0.005 -0.000	Min	Max	+0.005 -0.005	+0.002 -0.000	+0.005 -0.000
202	1/16 × 1/4	0.0615	0.0630	0.0728	0.250	0.268	0.0312	0.0635	0.0372
202.5	1/16 × 5/16	0.0615	0.0630	0.1038	0.312	0.330	0.0312	0.0635	0.0372
302.5	3/32 × 5/16	0.0928	0.0943	0.0882	0.312	0.330	0.0469	0.0948	0.0529
203	1/16 × 3/8	0.0615	0.0630	0.1358	0.375	0.393	0.0312	0.0635	0.0372
303	3/32 × 3/8	0.0928	0.0943	0.1202	0.375	0.393	0.0469	0.0948	0.0529
403	1/8 × 3/8	0.1240	0.1255	0.1045	0.375	0.393	0.0625	0.1260	0.0685
204	1/16 × 1/2	0.0615	0.0630	0.1668	0.500	0.518	0.0312	0.0635	0.0372
304	3/32 × 1/2	0.0928	0.0943	0.1511	0.500	0.518	0.0469	0.0948	0.0529
404	1/8 × 1/2	0.1240	0.1255	0.1355	0.500	0.518	0.0625	0.1260	0.0685
305	3/32 × 5/8	0.0928	0.0943	0.1981	0.625	0.643	0.0469	0.0948	0.0529
405	1/8 × 5/8	0.1240	0.1255	0.1825	0.625	0.643	0.0625	0.1260	0.0685
505	5/32 × 5/8	0.1553	0.1568	0.1669	0.625	0.643	0.0781	0.1573	0.0841
605	3/16 × 5/8	0.1863	0.1880	0.1513	0.625	0.643	0.0937	0.1885	0.0997
406	1/8 × 3/4	0.1240	0.1255	0.2455	0.750	0.768	0.0625	0.1260	0.0685
506	5/32 × 3/4	0.1553	0.1568	0.2299	0.750	0.768	0.0781	0.1573	0.0841
606	3/16 × 3/4	0.1863	0.1880	0.2143	0.750	0.768	0.0937	0.1885	0.0997
806	1/4 × 3/4	0.2487	0.2505	0.1830	0.750	0.768	0.1250	0.2510	0.1310
507	5/32 × 7/8	0.1553	0.1568	0.2919	0.875	0.895	0.0781	0.1573	0.0841
607	3/16 × 7/8	0.1863	0.1880	0.2763	0.875	0.895	0.0937	0.1885	0.0997
707	7/32 × 7/8	0.2175	0.2193	0.2607	0.875	0.895	0.1093	0.2198	0.1153
807	1/4 × 7/8	0.2487	0.2505	0.2450	0.875	0.895	0.1250	0.2510	0.1310
608	3/16 × 1	0.1863	0.1880	0.3393	1.000	1.020	0.0937	0.1885	0.0997
708	7/32 × 1	0.2175	0.2193	0.3237	1.000	1.020	0.1093	0.2198	0.1153
808	1/4 × 1	0.2487	0.2505	0.3080	1.000	1.020	0.1250	0.2510	0.1310
1008	5/16 × 1	0.3111	0.3130	0.2768	1.000	1.020	0.1562	0.3135	0.1622
1208	3/8 × 1	0.3735	0.3755	0.2455	1.000	1.020	0.1875	0.3760	0.1935
609	3/16 × 1 1/8	0.1863	0.1880	0.3853	1.125	1.145	0.0937	0.1885	0.0997
709	7/32 × 1 1/8	0.2175	0.2193	0.3697	1.125	1.145	0.1093	0.2198	0.1153
809	1/4 × 1 1/8	0.2487	0.2505	0.3540	1.125	1.145	0.1250	0.2510	0.1310
1009	5/16 × 1 1/8	0.3111	0.3130	0.3228	1.125	1.145	0.1562	0.3135	0.1622

Copyright ASME International
Provided by IHS under license with ASME
No reproduction or networking permitted without license from IHS
Not for Resale

USA STANDARD

Table 3 Keyseat Dimensions Concluded

Key Number	Nominal Size Key	Keyseat — Shaft					Key Above Shaft	Keyseat — Hub	
		Width A*		Depth B	Diameter F		Height C	Width D	Depth E
		Min	Max	+0.005 -0.000	Min	Max	+0.005 -0.005	+0.002 -0.000	+0.005 -0.000
610	3/16 × 1 1/4	0.1863	0.1880	0.4483	1.250	1.273	0.0937	0.1885	0.0997
710	7/32 × 1 1/4	0.2175	0.2193	0.4327	1.250	1.273	0.1093	0.2198	0.1153
810	1/4 × 1 1/4	0.2487	0.2505	0.4170	1.250	1.273	0.1250	0.2510	0.1310
1010	5/16 × 1 1/4	0.3111	0.3130	0.3858	1.250	1.273	0.1562	0.3135	0.1622
1210	3/8 × 1 1/4	0.3735	0.3755	0.3545	1.250	1.273	0.1875	0.3760	0.1935
811	1/4 × 1 3/8	0.2487	0.2505	0.4640	1.375	1.398	0.1250	0.2510	0.1310
1011	5/16 × 1 3/8	0.3111	0.3130	0.4328	1.375	1.398	0.1562	0.3135	0.1622
1211	3/8 × 1 3/8	0.3735	0.3755	0.4015	1.375	1.398	0.1875	0.3760	0.1935
812	1/4 × 1 1/2	0.2487	0.2505	0.5110	1.500	1.523	0.1250	0.2510	0.1310
1012	5/16 × 1 1/2	0.3111	0.3130	0.4798	1.500	1.523	0.1562	0.3135	0.1622
1212	3/8 × 1 1/2	0.3735	0.3755	0.4485	1.500	1.523	0.1875	0.3760	0.1935
617-1	3/16 × 2 1/8	0.1863	0.1880	0.3073	2.125	2.160	0.0937	0.1885	0.0997
817-1	1/4 ×2 1/8	0.2487	0.2505	0.2760	2.125	2.160	0.1250	0.2510	0.1310
1017-1	5/16 × 2 1/8	0.3111	0.3130	0.2448	2.125	2.160	0.1562	0.3135	0.1622
1217-1	3/8 × 2 1/8	0.3735	0.3755	0.2135	2.125	2.160	0.1875	0.3760	0.1935
617	3/16 × 2 1/8	0.1863	0.1880	0.4323	2.125	2.160	0.0937	0.1885	0.0997
817	1/4 × 2 1/8	0.2487	0.2505	0.4010	2.125	2.160	0.1250	0.2510	0.1310
1017	5/16 × 2 1/8	0.3111	0.3130	0.3698	2.125	2.160	0.1562	0.3135	0.1622
1217	3/8 × 2 1/8	0.3735	0.3755	0.3385	2.125	2.160	0.1875	0.3760	0.1935
822-1	1/4 × 2 3/4	0.2487	0.2505	0.4640	2.750	2.785	0.1250	0.2510	0.1310
1022-1	5/16 × 2 3/4	0.3111	0.3130	0.4328	2.750	2.785	0.1562	0.3135	0.1622
1222-1	3/8 × 2 3/4	0.3735	0.3755	0.4015	2.750	2.785	0.1875	0.3760	0.1935
1422-1	7/16 × 2 3/4	0.4360	0.4380	0.3703	2.750	2.785	0.2187	0.4385	0.2247
1622-1	1/2 × 2 3/4	0.4985	0.5005	0.3390	2.750	2.785	0.2500	0.5010	0.2560
822	1/4 × 2 3/4	0.2487	0.2505	0.6200	2.750	2.785	0.1250	0.2510	0.1310
1022	5/16 × 2 3/4	0.3111	0.3130	0.5888	2.750	2.785	0.1562	0.3135	0.1622
1222	3/8 × 2 3/4	0.3735	0.3755	0.5575	2.750	2.785	0.1875	0.3760	0.1935
1422	7/16 × 2 3/4	0.4360	0.4380	0.5263	2.750	2.785	0.2187	0.4385	0.2247
1622	1/2 × 2 3/4	0.4985	0.5005	0.4950	2.750	2.785	0.2500	0.5010	0.2560
1228	3/8 × 3 1/2	0.3735	0.3755	0.7455	3.500	3.535	0.1875	0.3760	0.1935
1428	7/16 × 3 1/2	0.4360	0.4380	0.7143	3.500	3.535	0.2187	0.4385	0.2247
1628	1/2 × 3 1/2	0.4985	0.5005	0.6830	3.500	3.535	0.2500	0.5010	0.2560
1828	9/16 × 3 1/2	0.5610	0.5630	0.6518	3.500	3.535	0.2812	0.5635	0.2872
2028	5/8 × 3 1/2	0.6235	0.6255	0.6205	3.500	3.535	0.3125	0.6260	0.3185
2228	11/16 × 3 1/2	0.6860	0.6880	0.5893	3.500	3.535	0.3437	0.6885	0.3497
2428	3/4 × 3 1/2	0.7485	0.7505	0.5580	3.500	3.535	0.3750	0.7510	0.3810

* Table 3 Width A values were set with the maximum keyseat (shaft) width as that figure which will receive a key with the greatest amount of looseness consistent with assuring the key's sticking in the keyseat (shaft). Minimum keyseat width is that figure permitting the largest shaft distortion acceptable when assembling maximum key in minimum keyseat.

Dimensions A, B, C, D are taken at side intersection.

Copyright ASME International
Provided by IHS under license with ASME
No reproduction or networking permitted without license from IHS
Not for Resale

USA Standards for
Machine Tools, Cutting Tools and Related Standards

TITLE OF STANDARD

Preferred Limits and Fits for Cylindrical Parts	B4.1–1967
T-Slots, Their Bolts, Nuts, Tongues, and Cutters	B5.1–1949
Milling Cutters	B5.3–1960
Rotating Air Cylinders and Adapters	B5.5–1959
Jig Bushings	B5.6–1962
Circular and Dovetailed Forming Tool Blanks	B5.7–1954
Chucks and Chuck Jaws	B5.8–1954 (Reaffirmed 1959)
Spindle Noses for Tool Room Lathes, Engine Lathes, Turret Lathes, and Automatic Lathes	B5.9–1967
Machine Tapers	B5.10–1963
Spindle Noses and Adjustable Adapters for Multiple Spindle Drilling Heads	B5.11–1964
Involute Splines, Serrations and Inspection	B5.15–1960
Accuracy of Engine and Tool Room Lathes	B5.16–1952
Markings for Identifying Grinding Wheels and Other Bonded Abrasives	B5.17–1958
Spindle Noses and Arbors for Milling Machines	B5.18–1960
Life Tests of Single-Point Tools	B5.19–1946 (Reaffirmed 1953)
Machine Pins	B5.20–1958
Single Point Tools and Tool Posts	B5.22–1950
Punch and Die Sets for Two-Post Punch Press Tools	B5.25–1950
Drill Drivers	B5.27–1959
Mounting Dimensions of Lubricating and Coolant Pumps for Machine Tools	B5.28–1958
Designation and Working Ranges of Grinding Machines	B5.32 & 33–1953
Life Tests for Single-Point Tools of Sintered Carbide	B5.34–1956
Machine Mounting Specifications for Abrasive Discs and Plate Mounted Wheels	B5.35–1957
Driving and Spindle Ends for Portable Air and Electric Tools	B5.38–1958
Spindle Flanges for Precision Boring Machines	B5.39–1961
Spindle Noses and Tool Shanks for Horizontal Boring Machines	B5.40–1962
Blanks and Semi-Finished Blanks for Solid Carbide Taps	B94.1–1964
Reamers	B94.2–1964
Straight Cut-Off Blades for Lathes and Screw Machines	B94.3–1965
Identification System for Throw Away Inserts for Cutting Tools	B94.4–1965
Carbide Blanks and Cutting Tools	B94.5–1966
Knurling	B94.6–1966
Hobs	B94.7–1966
Inserted Blade Milling Cutter Bodies (Rev. B5.23–1958)	B94.8–1967
Taps Cut and Ground Threads (Rev. B5.4 –1959)	B94.9–1967
High-Speed Steel and Cast Nonferrous Single-Point Tools and Tool Holders (Rev. B5.29–1959)	B94.10–1967
Twist Drills (Rev. B5.12–1958)	B94.11–1967
Keys and Keyseats	B17.1–1967
Woodruff Keys	B17.2–1967

Binders for holding standards are available.

A complete list of USA Standards published by The American Society of Mechanical Engineers obtainable upon request.

Copyright ASME International
Provided by IHS under license with ASME
No reproduction or networking permitted without license from IHS

Not for Resale