ASME B16.50-2001

WROUGHT COPPER AND COPPER ALLOY BRAZE-JOINT PRESSURE FITTINGS

AN AMERICAN NATIONAL STANDARD

The American Society of Mechanical Engineers

Copyright ASME International
Provided by IHS under license with ASME
No reproduction or networking permitted without license from IHS

Not for Resale



The American Society of Mechanical Engineers

AN AMERICAN NATIONAL STANDARD

WROUGHT COPPER AND COPPER ALLOY BRAZE-JOINT PRESSURE FITTINGS

ASME B16.50-2001

--`,,`-`-`,,`,,`,`,,`---

Copyright ASME International
Provided by IHS under license with ASME
No reproduction or networking permitted without license from IHS

Not for Resale

Date of Issuance: April 1, 2002

The 2001 edition of this Standard is being issued with an automatic addenda subscription service. The use of addenda allows revisions made in response to public review comments or committee actions to be published on a regular yearly basis; revisions published in addenda will become effective 1 year after the Date of Issuance of the addenda. The next edition of this Standard is scheduled for publication in 2006.

ASME issues written replies to inquiries concerning interpretations of technical aspects of this Standard. The interpretations will be included with the above addenda service.

ASME is the registered trademark of The American Society of Mechanical Engineers.

This code or standard was developed under procedures accredited as meeting the criteria for American National Standards. The Standards Committee that approved the code or standard was balanced to assure that individuals from competent and concerned interests have had an opportunity to participate. The proposed code or standard was made available for public review and comment that provides an opportunity for additional public input from industry, academia, regulatory agencies, and the public-at-large.

ASME does not "approve," "rate," or "endorse" any item, construction, proprietary device, or activity.

ASME does not take any position with respect to the validity of any patent rights asserted in connection with any items mentioned in this document, and does not undertake to insure anyone utilizing a standard against liability for infringement of any applicable letters patent, nor assume any such liability. Users of a code or standard are expressly advised that determination of the validity of any such patent rights, and the risk of infringement of such rights, is entirely their own responsibility.

Participation by federal agency representative(s) or person(s) affiliated with industry is not to be interpreted as government or industry endorsement of this code or standard.

ASME accepts responsibility for only those interpretations of this document issued in accordance with the established ASME procedures and policies, which precludes the issuance of interpretations by individuals.

No part of this document may be reproduced in any form,
in an electronic retrieval system or otherwise,
without the prior written permission of the publisher.

The American Society of Mechanical Engineers
Three Park Avenue, New York, NY 10016-5990

Copyright © 2002 by
THE AMERICAN SOCIETY OF MECHANICAL ENGINEERS
All Rights Reserved
Printed in U.S.A.

--`,,`,,`-`-`,,`,,`,`,,`---

Copyright ASME International
Provided by IHS under license with ASME
No reproduction or networking permitted without license from IHS

Not for Resale

CONTENTS

Foreword v
Committee Roster vi
Correspondence with the B16 Committee vii

1 Scope 1
1.1 General 1
1.2 Convention 1
1.3 Units of Measure 1
1.4 References 1
1.5 Quality Systems 1

2 Pressure-Temperature Ratings 1
2.1 Rating of System 1
2.2 Fitting Bursting Strength 1

3 Terminology 2
3.1 Abbreviations 2
3.2 Definitions 2

4 Size 2

5 Marking 2

6 Material 2

7 Laying Lengths 5

8 Tube Stops 5

9 Inspection Tolerance 5
9.1 Linear Dimensions 5
9.2 Ovality of Fitting End (C or FTG) 6
9.3 Inside Diameter of Fitting 6
9.4 Wall Thickness 6

10 Threaded Ends 6
10.1 Countersink or Chamfer 6
10.2 Threading Tolerances 6
10.3 Design of Threaded Ends 6

11 Alignment 6

12 Gauging 6
12.1 Preferred Gauging Method of Braze-Joint Ends 6
12.2 Optional Gauging Method of Braze-Joint Ends 7

Copyright ASME International
Provided by IHS under license with ASME
No reproduction or networking permitted without license from IHS
Not for Resale

12.3 Standard Gauging Method of Threaded Ends 7

Figures

1 Method of Designating Laying Lengths of Fittings and Openings of Reducer Fittings 3
2 Tube Stops 5
3 Alignment 6

Tables

1 Rated Internal Working-Pressure for Copper Fittings (kPa) 2
2 Inspection Tolerance 5
3 Dimensions of Braze-Joint Ends 9

Mandatory Appendices

I U.S. Customary Equivalents 10
II References 13

Nonmandatory Appendices

A Fitting Rating 14
B Quality System Program 15

Copyright ASME International
Provided by IHS under license with ASME
No reproduction or networking permitted without license from IHS
Not for Resale

FOREWORD

In 1994, the ASME B16 Committee authorized Subcommittee J Standardization to develop a standard for wrought copper and copper alloy braze-joint pressure fittings. These fittings are intended for use with seamless copper tube conforming to ASTM Standard Specifications, B 88 (Water and General Plumbing Systems), B 280 (Air Conditioning and Refrigeration Service), and B 819 (Medical Gas Systems). Following approval by the Standards Committee and ASME, this Standard was approved as an American National Standard on October 11, 2001, with the new designation ASME B16.50-2001.

Requests for interpretation or suggestions for revision should be sent to the Secretary, B16 Committee, The American Society of Mechanical Engineers (ASME International), Three Park Avenue, New York, NY 10016-5990.

Copyright ASME International
Provided by IHS under license with ASME
No reproduction or networking permitted without license from IHS
Not for Resale

ASME B16 COMMITTEE
Standardization of Valves, Flanges, Fittings, Gaskets, and Valve Actuators

(The following is the roster of the Committee at the time of approval of this Standard.)

OFFICERS

H. R. Sonderegger, *Chair*
M. L. Nayyar, *Vice Chair*
P. A. Reddington, *Secretary*

COMMITTEE PERSONNEL

R. W. Barnes, Anric Enterprises
R. R. Brodin, Fisher Controls International, Inc.
M. A. Clark, Nibco, Inc.
A. Cohen, Arthur Cohen and Associates
C. E. Floren, Mueller Co.
D. R. Frikken, Solutia, Inc.
G. A. Jolly, Vogt Valve Co.
W. G. Knecht, BW/IP International, Inc.
R. Koester, The William Powell Co.
W. N. McLean, Newco Valves
M. L. Nayyar, Bechtel Power Corp.
P. A. Reddington, The American Society of Mechanical Engineers
R. A. Schmidt, Trinity-Ladish Co.
H. R. Sonderegger, Grinnell Corp.
W. M. Stephan, Flexitallic, Inc.,
T. F. Stroud, Ductile Iron Pipe Research Association
R. E. White, Richard E. White and Associates
D. A. Williams, Southern Company Services
L. A. Willis, The Dow Chemical Co.
W. R. Worley, Union Carbide Corp.

SUBCOMMITTEE J

M. A. Clark, *Chair,* Nibco, Inc.
D. F. Buccicone, Elkhart Production Corp.
A. Cohen, Arthur Cohen and Associates
D. R. Frikken, Solutia, Inc.
T. L. Jamison, Mueller Industries
A. G. Kireta, Jr. Copper Development Association, Inc.
A. A. Knapp, Canadian Copper/Brass Dev Assn
L. McDaniel, Mueller Copper Fittings, LP
G. E. Moino, The American Society of Mechanical Engineers

Copyright ASME International
Provided by IHS under license with ASME
No reproduction or networking permitted without license from IHS
Not for Resale

CORRESPONDENCE WITH THE B16 COMMITTEE

General. ASME Standards are developed and maintained with the intent to represent the consensus of concerned interests. As such, users of this Standard may interact with the Committee by requesting interpretations, proposing revisions, and attending Committee meetings. Correspondence should be addressed to:

Secretary, B16 Main Committee
The American Society of Mechanical Engineers
Three Park Avenue
New York, NY 10016-5990

Proposing Revisions. Revisions are made periodically to the Standard to incorporate changes that appear necessary or desirable, as demonstrated by the experience gained from the application of the Standard. Approved revisions will be published periodically.

The Committee welcomes proposals for revisions to this Standard. Such proposals should be as specific as possible, citing the paragraph number(s), the proposed wording, and a detailed description of the reasons for the proposal, including any pertinent documentation.

Interpretations. Upon request, the B16 Committee will render an interpretation of any requirement of the Standard. Interpretations can only be rendered in response to a written request sent to the Secretary of the B16 Main Committee.

The request for interpretation should be clear and unambiguous. It is further recommended that the inquirer submit his/her request in the following format:

Subject: Cite the applicable paragraph number(s) and the topic of the inquiry.

Edition: Cite the applicable edition of the Standard for which the interpretation is being requested.

Question: Phrase the question as a request for an interpretation of a specific requirement suitable for general understanding and use, not as a request for an approval of a proprietary design or situation. The inquirer may also include any plans or drawings, which are necessary to explain the question; however, they should not contain proprietary names or information.

Requests that are not in this format will be rewritten in this format by the Committee prior to being answered, which may inadvertently change the intent of the original request.

ASME procedures provide for reconsideration of any interpretation when or if additional information that might affect an interpretation is available. Further, persons aggrieved by an interpretation may appeal to the cognizant ASME Committee or Subcommittee. ASME does not “approve,” “certify,” “rate,” or “endorse” any item, construction, proprietary device, or activity.

Attending Committee Meetings. The B16 Main Committee regularly holds meetings, which are open to the public. Persons wishing to attend any meeting should contact the Secretary of the B16 Main Committee.

Copyright ASME International
Provided by IHS under license with ASME
No reproduction or networking permitted without license from IHS
Not for Resale

Copyright ASME International
Provided by IHS under license with ASME
No reproduction or networking permitted without license from IHS
Not for Resale

WROUGHT COPPER AND COPPER ALLOY BRAZE-JOINT PRESSURE FITTINGS

1 SCOPE

1.1 General

This Standard establishes requirements for wrought copper and wrought copper alloy braze-joint seamless fittings designed for use with seamless copper tube conforming to ASTM Standard Specification, B 88 (Water and General Plumbing Systems), B 280 (Air Conditioning and Refrigeration Service), and B 819 (Medical Gas Systems).

This Standard covers joints assembled with brazing materials conforming to ANSI/AWS A5.8.

This Standard is allied to ASME standards B16.18 and B16.22. It provides requirements for fitting-ends suitable for brazing. This Standard covers:

(a) pressure-temperature ratings;

(b) abbreviations for end connections;

(c) size and method of designating openings of fittings;

(d) marking;

(e) material;

(f) dimensions and tolerances; and

(g) testing.

1.2 Convention

For the purpose of determining conformance with this Standard, the convention for fixing significant digits where limits, maximum or minimum values, are specified shall be "rounding off" as defined in ASTM E 29. This requires that an observed or calculated value shall be rounded off to the nearest unit in the last right-hand digit used for expressing the limit.

1.3 Units of Measure

The values stated in either SI (metric) or US Customary (in.-lb) units of measure shall be regarded separately as standard. Within the main text, SI units are given. For convenience, the customary units are shown in Mandatory Appendix I. The values stated in each system are not exact equivalents; therefore, each system shall be used independently of the other.

NOTE: Combining values from the two systems may result in nonconformance with the standard.

1.4 References

Standards and specifications adopted by reference in this Standard are shown in Mandatory Appendix II, which is part of this Standard. It is not considered practical to identify the specific edition of each standard and specification in the individual references. Instead, the specific edition reference is identified in Mandatory Appendix II.

1.5 Quality Systems

Requirements relating to the product manufacturer's Quality System Programs are described in Nonmandatory Appendix B.

2 PRESSURE-TEMPERATURE RATINGS

2.1 Rating of System

The internal working pressure-temperature rating for a braze-joint system is dependent upon, not only fitting and tube strength, but also selection of valves and appurtenances.

Pressure-temperature ratings for fittings and braze joints to the dimensions of Table 3 (Table I3), made with typical commercial brazing materials, shall be considered equal to the values given in Table 1 (Table I1).

The internal working-pressure rating of the system shall be the lowest of the values shown in Table 1 (Table I1) and those of the tube, valves, or appurtenances.

2.2 Fitting Bursting Strength

Fittings manufactured to this Standard shall have an ambient-temperature bursting-strength of at least four times the 38°C (100°F) rated internal working-pressure as shown in Table 1 (Table I1).

Copyright ASME International
Provided by IHS under license with ASME
No reproduction or networking permitted without license from IHS Not for Resale

TABLE 1 RATED INTERNAL WORKING-PRESSURE FOR COPPER FITTINGS, kPa

Standard Water Tube Size [Note (1)]	−29/38°C	66°C	93°C	121°C	149°C	177°C	204°C
1/8 [Note (2)]	9690	8240	7750	7750	7590	6460	4840
3/16 [Note (3)]	7630	6490	6110	6110	5980	5090	3810
1/4	6280	5340	5020	5020	4920	4190	3140
3/8	5360	4560	4290	4290	4200	3570	2680
1/2	4970	4220	3980	3980	3890	3310	2480
5/8	4350	3700	3480	3480	3410	2900	2170
3/4	4010	3410	3210	3210	3140	2670	2000
1	3400	2890	2720	2720	2660	2270	1700
1 1/4	3020	2570	2420	2420	2370	2010	1510
1 1/2	2810	2390	2250	2250	2200	1870	1400
2	2500	2130	2000	2000	1960	1670	1250
2 1/2	2310	1960	1850	1850	1810	1540	1150
3	2180	1850	1740	1740	1710	1450	1090
3 1/2	2090	1770	1670	1670	1630	1390	1040
4	2020	1710	1610	1610	1580	1340	1010
5	1850	1570	1480	1480	1450	1230	920
6	1720	1460	1380	1380	1350	1150	860
8	1860	1580	1490	1490	1460	1240	930

GENERAL NOTES:
(a) The fitting pressure-rating applies to the largest opening of the fitting.
(b) The fitting pressure-rating is calculated, as shown in Nonmandatory Appendix A, then rounded down to the nearest unit of 10.

NOTES:
(1) For size designation of fittings, see Section 4.
(2) 1/8 nominal size is 1/4 O.D. seamless copper tube for refrigeration service, etc., as listed in ASTM B 280.
(3) 3/16 nominal size is 5/16 O.D. seamless copper tube for refrigeration service, etc., as listed in ASTM B 280.

3 TERMINOLOGY

3.1 Abbreviations

The following symbols are used to designate the type of fitting end:

C = braze-joint fitting end made to receive copper tube diameter (female)
F = internal ANSI standard taper pipe-thread end (female) NPTI
M = external ANSI standard taper pipe-thread end (male) NPTE
FTG = braze-joint fitting end made to copper tube diameter (male)

3.2 Definitions

out-of-roundness: the maximum measured diameter minus minimum measured diameter.

ovality: the elliptical condition associated with out-of-roundness.

4 SIZE

The size of the fittings shown in Table 3 and Table I3 corresponds to standard water tube size as shown in ASTM B 88, Specification for Seamless Copper Water Tube. The size of the threaded ends corresponds to nominal pipe size as shown in ASME B1.20.1.

Fittings are designated by the size of the openings in the sequence illustrated in Fig. 1.

5 MARKING

Each fitting shall be permanently marked with the manufacturer's name or trademark in accordance with MSS SP-25 and the letters "BZ" in upper case. Marking on fittings less than size 1/2 or on any fitting where it damages the brazing surfaces is not required.

6 MATERIAL

(a) Fittings shall be made from copper UNS Nos.

Copyright ASME International
Provided by IHS under license with ASME
No reproduction or networking permitted without license from IHS
Not for Resale

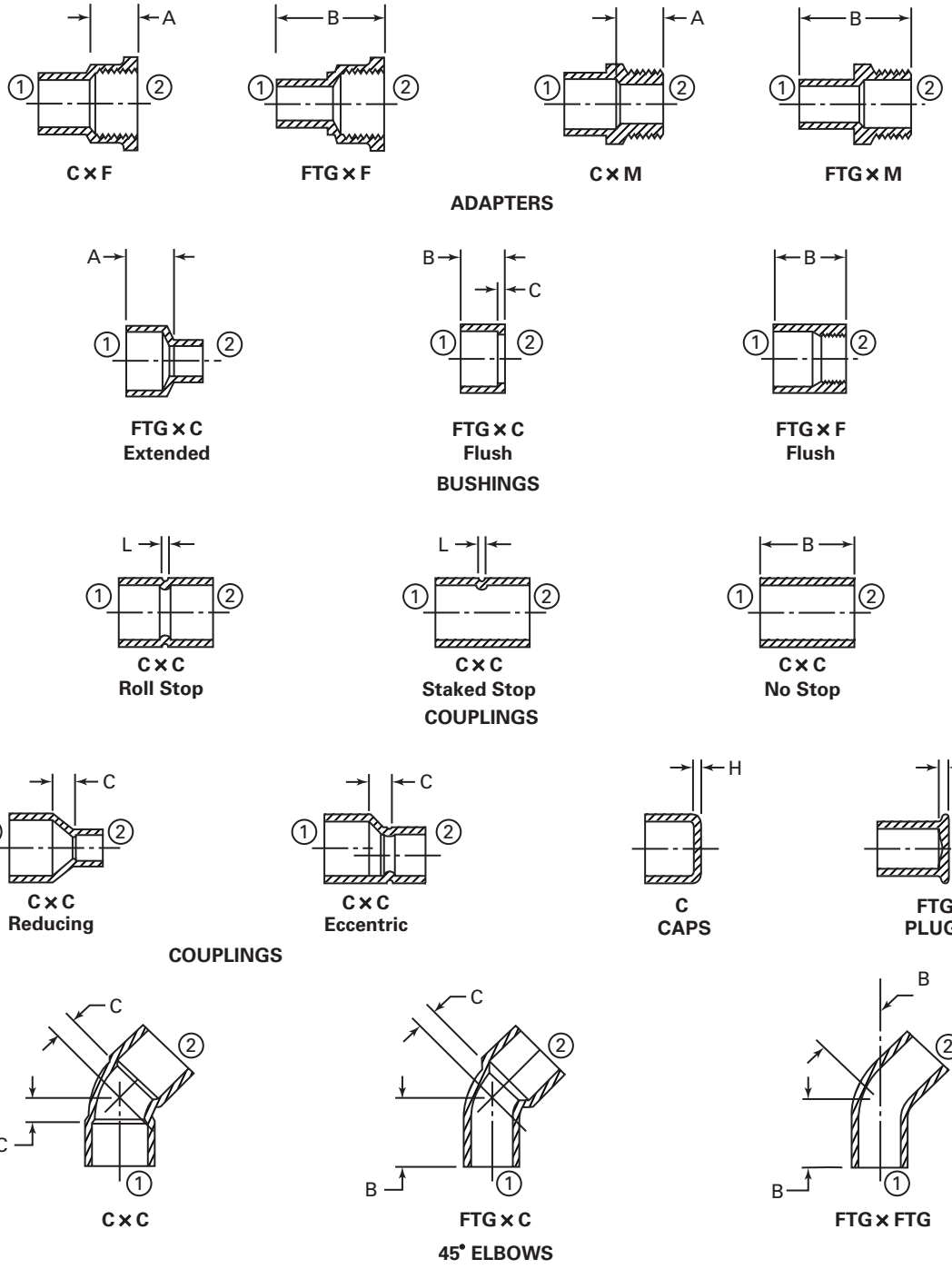

GENERAL NOTES:
(a) Fittings are designated by size in the order: 1 x 2 x 3.
(b) Fitting designs and drawings are illustrative only.

FIG. 1 METHOD OF DESIGNATING LAYING LENGTHS OF FITTINGS AND OPENINGS OF REDUCING FITTINGS

Copyright ASME International
Provided by IHS under license with ASME
No reproduction or networking permitted without license from IHS Not for Resale

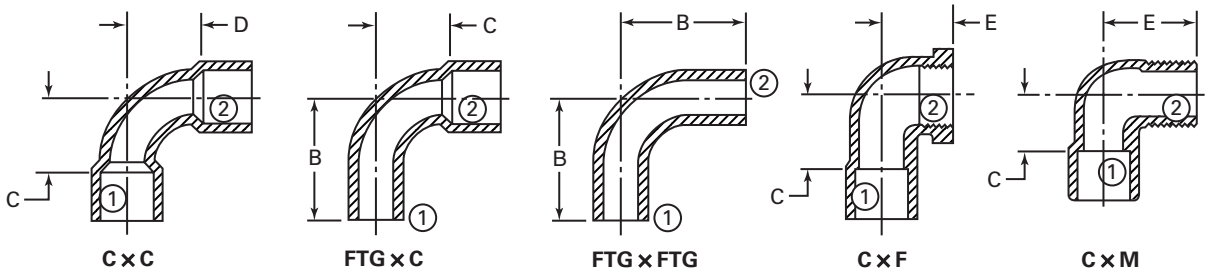

90° ELBOWS - SHORT RADIUS

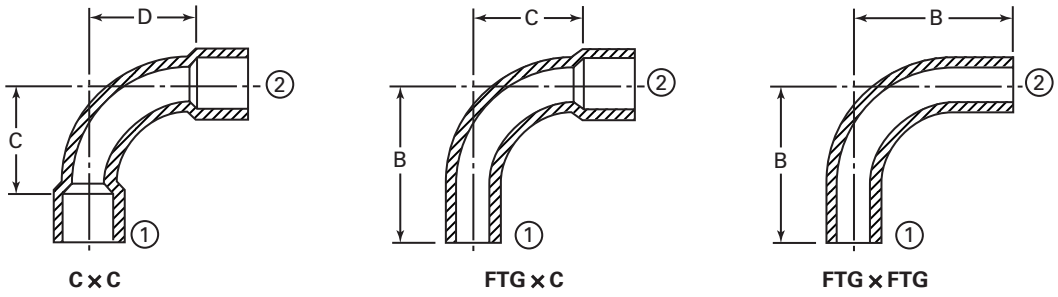

90° ELBOWS - LONG RADIUS

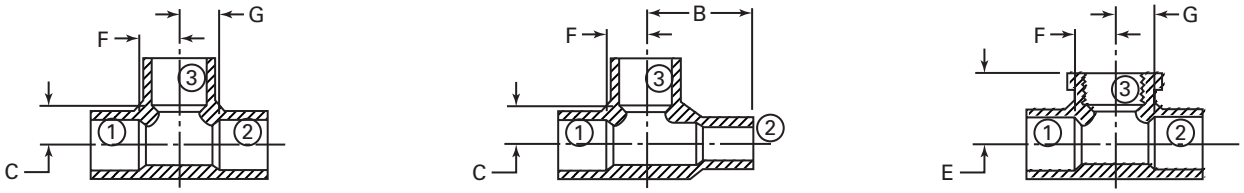

TEES

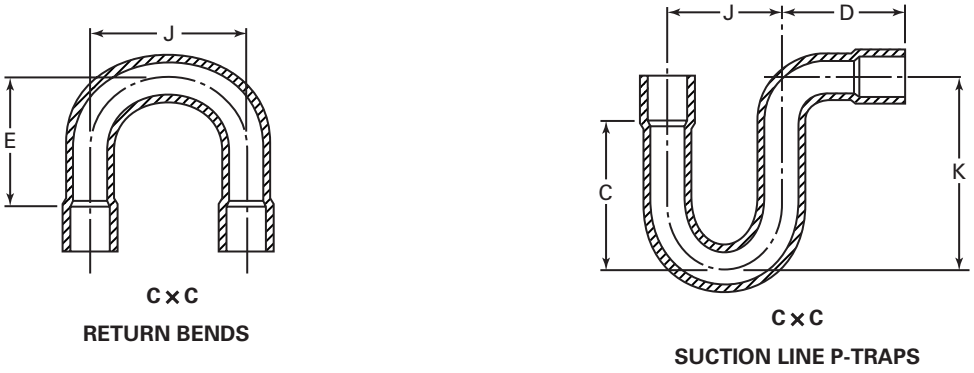

RETURN BENDS

SUCTION LINE P-TRAPS

FIG. 1 METHOD OF DESIGNATING LAYING LENGTHS OF FITTINGS AND OPENINGS OF REDUCING FITTINGS (CONT'D)

Copyright ASME International
Provided by IHS under license with ASME
No reproduction or networking permitted without license from IHS

Not for Resale

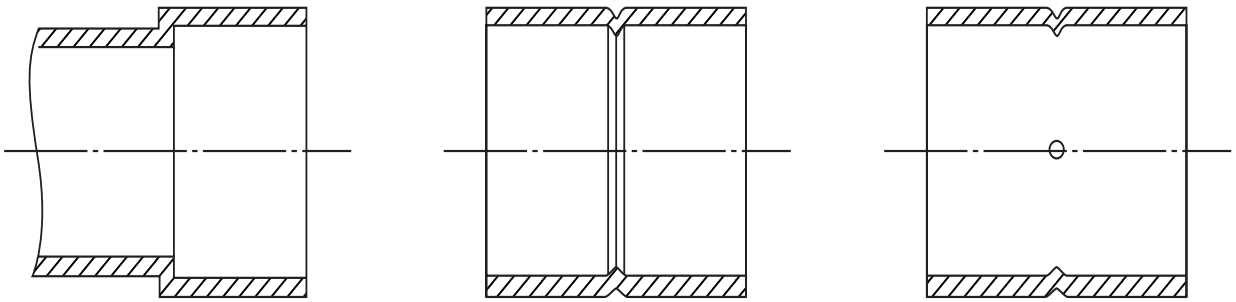

GENERAL NOTE: Figure 2 is for information only; the shape and number of abutments are at the manufacturer's discretion.

FIG. 2 TUBE STOPS

C10200, C12000, or C12200; or copper alloy UNS C23000, for which allowable stresses are found in ASME B31.1, ASME B31.9, or ASME Boiler and Pressure Vessel Code, Section II, Materials.

(b) Other coppers and copper alloys are permitted provided they meet the chemical requirements of 84% minimum copper and 16% maximum zinc, and provided the fittings produced from the copper alloy meets all the mechanical and corrosion-resistant properties for the end purposes of the fittings. The composition of the copper alloys shall contain nothing that will inhibit joining to the tube or to other fittings.

7 LAYING LENGTHS

Due to widely varying manufacturing processes, meaningful laying length requirements of fittings cannot be established. Consult the manufacturer for these dimensions.

8 TUBE STOPS

Except for repair couplings, fittings shall be manufactured with a tube stop. Repair couplings shall not require a tube stop. The tube stop shall control joint length, even with an external (FTG) end having the minimum outside diameter shown in Table 3 (Table I3). Examples of various tube stop configurations are shown in Fig. 2.

TABLE 2 INSPECTION TOLERANCE

Standard Water Tube and Pipe Thread Sizes	Tolerance, Plus or Minus, mm
1/8[Note (1)], 3/16[Note (2)], 1/4, 3/8	1.3
1/2, 5/8, 3/4	1.5
1, 1 1/4, 1 1/2, 2	2.0
2 1/2, 3, 3 1/2	2.8
4 and 5	3.0
6 and 8	4.1

NOTES:
(1) 1/8 nominal size is 1/4 O.D. seamless copper tube for refrigeration service, etc., as listed in ASTM B 280.
(2) 3/16 nominal size is 5/16 O.D. seamless copper tube for refrigeration service, etc., as listed in ASTM B 280.

9 INSPECTION TOLERANCE

9.1 Linear Dimensions

An inspection tolerance, as shown in Table 2 (Table I2), shall be allowed on center-to-shoulder, center-to-center, center-to-threaded end, and shoulder-to-threaded end dimensions on all fittings having internal (C) braze ends, as well as, on center-to-braze end and braze end-to-threaded end dimensions on all fittings having external (FTG) braze ends.

Coupling inspection-limits for shoulder-to-shoulder and shoulder-to-end dimensions shall be double those shown in Table 2 (Table I2), except that the minus tolerance applied to dimension *L* (Fig. 1) shall not result in a dimension less than 1.5 mm (0.06 in.).

The largest opening in the fitting shall govern the tolerance to be applied to all openings.

Copyright ASME International
Provided by IHS under license with ASME
No reproduction or networking permitted without license from IHS
Not for Resale

9.2 Ovality of Fitting End (C or FTG)

Maximum ovality of the fitting braze-joint end shall not exceed 1% of the maximum diameters shown in Table 3 (Table I3). The average of the maximum and minimum diameters shall be within the dimensions shown in the table.

9.3 Inside Diameter of Fitting

The minimum cross-sectional area of the inside diameter through the fitting body shall not be less than the theoretical minimum area defined by diameter "O" in Table 3 (Table I3). The out-of-roundness condition of the cross-sectional area shall not exceed the value shown in Table 3 (Table I3).

For reducer or adapter fittings, the smallest end diameter shall apply, provided that this diameter does not restrict the other outlets.

9.4 Wall Thickness

The minimum wall-thickness shall not be less than shown in Table 3 (Table I3).

10 THREADED ENDS

Fitting threads shall be right-hand, conforming to ASME B1.20.1, American National Standard for Pipe Threads, General Purpose (Inch). They shall be taper threads (NPT).

10.1 Countersink or Chamfer

All internal threads shall be countersunk a distance no less than one-half the pitch of the thread, at an angle of approximately 45 deg with the axis of the thread. All external threads shall be chamfered at an angle of 30 deg to 45 deg from the axis. Countersinking and chamfering shall be concentric with the threads.

The length of threads shall be measured to include the countersink or chamfer.

10.2 Threading Tolerances

Tapered pipe threads (NPT) shall be checked by use of plug or ring gauges in either standard or limit types. When gauging internal taper threads, the plug gauge shall be screwed handtight into the fitting. The reference point for gauging internal product-threads depends on the chamfer diameter. When the internal-chamfer diameter exceeds the major diameter of the internal thread, the reference point shall be the last thread scratch on the chamfer cone. Otherwise, when the internal-chamfer diameter does not exceed the major diameter of the internal thread, the reference point shall be the end of the fitting. In gauging external taper threads, the ring gauge shall be screwed handtight on the external thread. On the external thread, the ring gauge shall be flush with the end of the thread.

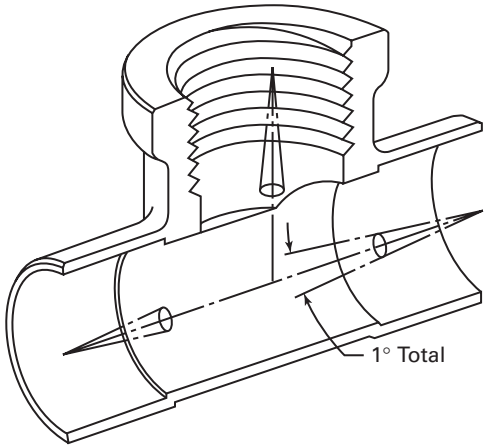

GENERAL NOTE: Figure 2 is for illustration only.

FIG. 3 ALIGNMENT

Tolerance for an internally threaded end having an internal shoulder shall be from the gauge reference point (notch) to one turn small. Tolerance for an internally threaded end without a shoulder, and for an externally threaded end, shall be from one turn small to one turn large.

10.3 Design of Threaded Ends

The wrenching section of internally threaded ends shall be polygonal, and the wrenching section of externally threaded ends shall be furnished with either polygon or flats, at the manufacturer's option.

11 ALIGNMENT

The maximum-allowable deviation in the angular alignment of any end from the specified axis position shall be $\frac{1}{2}$ deg (1 deg total) (see Fig. 3).

12 GAUGING

12.1 Preferred Gauging Method of Braze-Joint Ends

The preferred method of gauging the diameter tolerances for external and internal ends shall be by the

Copyright ASME International
Provided by IHS under license with ASME
No reproduction or networking permitted without license from IHS
Not for Resale

use of plain plug and ring gauges designed to hold the product within the limits established in Table 3 (Table 13). Gauge tolerances shall be Class ZM, as defined in ASME B4.4M.

12.2 Optional Gauging Method of Braze-Joint Ends

For gauging the diameter tolerance of external and internal ends, the use of direct reading instruments instead of ring and plug gauges as specified in para. 12.1 shall be permitted. When gauging the diameters of external and internal ends using direct reading instruments, refer to para. 9.2.

12.3 Standard Gauging Method of Threaded Ends

The standard method of gauging the externally and internally threaded ends shall be in accordance with the requirements of ASME B1.20.1.

NOTE: In gauging pipe threads, it is acceptable and common practice to rap or tap the part to assure proper seating of the gauge. However, it is first necessary to clean both the gauge and the product threads to assure that they are free of chips, burrs, abrasives, or other foreign materials.

--`-`-`,,`,,`,`,,`---

Copyright ASME International
Provided by IHS under license with ASME
No reproduction or networking permitted without license from IHS Not for Resale

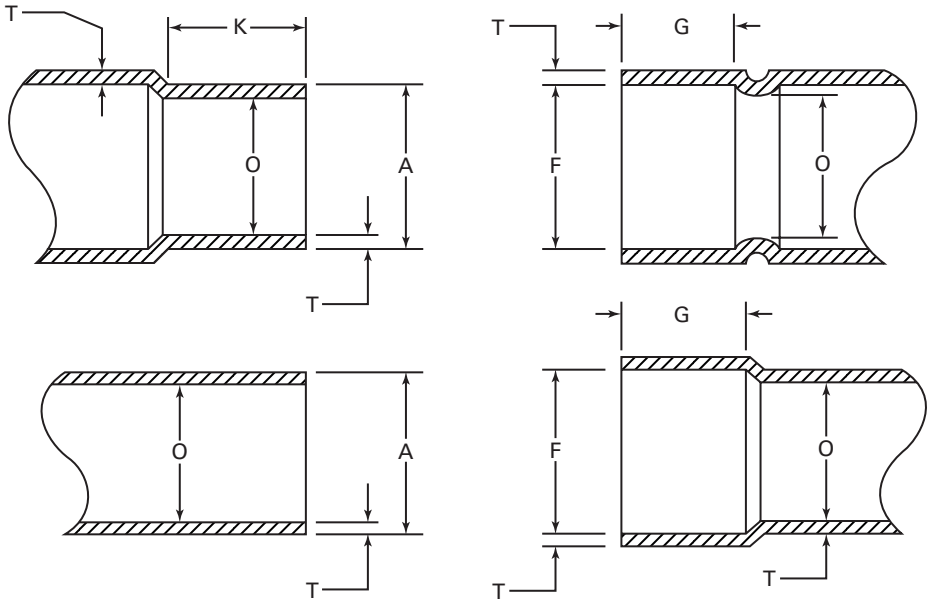

MALE END (FTG)

FEMALE END (C)

TABLE 3 ILLUSTRATION DIMENSIONS OF BRAZE-JOINT ENDS

Copyright ASME International
Provided by IHS under license with ASME
No reproduction or networking permitted without license from IHS

Not for Resale

TABLE 3 DIMENSIONS OF BRAZE-JOINT ENDS

	External End			Internal End					
	Outside Diameter, *A* [Note (2)]		Length, *K* [Note (3)]	Inside Diameter, *F* [Note (2)]		Depth, *G* [Note (4)]	Wall Thickness, *T*	Inside Diameter of Fitting, *O*	
Standard Water Tube Size [Note (1)]	Min.	Max.	Min.	Min.	Max.	Min.	Min.	Dia. Min.	Out-of-Round Max.
1/8 [Note (5)]	6.30	6.38	5.1	6.40	6.50	3.8	0.48	4.6	0.5
3/16 [Note (6)]	7.87	7.95	5.1	8.95	8.08	4.1	0.58	6.1	0.6
1/4	9.47	9.55	5.8	9.58	9.68	4.3	0.58	7.6	0.8
3/8	12.62	12.73	6.6	12.75	12.85	5.1	0.66	9.9	1.0
1/2	15.80	15.90	7.1	15.93	16.03	5.6	0.74	13.2	1.3
5/8	18.97	19.08	7.6	19.10	19.20	6.1	0.79	16.0	1.6
3/4	22.15	22.25	7.9	22.28	22.38	6.4	0.84	18.8	1.9
1	28.50	28.63	8.6	28.65	28.75	7.1	1.02	24.9	2.5
1 1/4	34.85	34.98	9.4	35.00	35.10	7.9	1.12	31.2	3.1
1 1/2	41.17	41.33	10.2	41.35	41.48	8.6	1.30	37.3	3.7
2	53.87	54.03	11.9	54.05	54.18	10.2	1.50	49.3	4.9
2 1/2	66.57	66.73	13.5	66.75	66.88	11.9	1.70	61.5	6.1
3	79.27	79.43	15.0	79.45	79.58	13.5	1.91	73.4	7.3
3 1/2	91.97	92.13	16.5	92.15	92.28	14.0	2.18	85.6	8.6
4	104.67	104.83	18.3	104.85	104.98	16.3	2.44	97.5	9.8
5	130.07	130.23	20.6	130.25	130.38	18.5	2.82	119.4	11.9
6	155.47	155.63	23.9	155.65	155.78	21.1	3.15	145.3	14.5
8	206.22	206.43	32.5	206.45	206.58	29.7	4.39	191.8	19.2

GENERAL NOTES:
(a) Dimensions are in millimeters.
(b) Drawings and designs of fittings are illustrative only. Dimensions herein shall govern in all cases.

NOTES:
(1) For size designation of fittings, see Section 4.
(2) For ovality, see para. 8.2.
(3) The distance from the point of tangency, at the gauge I.D. to the gauge line, shall be equal to the dimension shown in Column K.
(4) The distance from the point of tangency, at the gauge O.D. to the gauge line, shall be equal to the dimension shown in Column G.
(5) 1/8 nominal size is 1/4 O.D. seamless copper tube for refrigeration service, etc., as listed in ASTM B 280.
(6) 3/16 nominal size is 5/16 O.D. seamless copper tube for refrigeration service, etc., as listed in ASTM B 280.

Copyright ASME International
Provided by IHS under license with ASME
No reproduction or networking permitted without license from IHS Not for Resale

MANDATORY APPENDIX I
U.S. CUSTOMARY EQUIVALENTS

TABLE I1 RATED INTERNAL WORKING-PRESSURE FOR COPPER FITTINGS (psi)

Standard Water Tube Size [Note (1)]	−20–100°F	150°F	200°F	250°F	300°F	350°F	400°F
1/8 [Note (2)]	1405	1195	1125	1125	1100	935	700
3/16 [Note (3)]	1105	940	885	885	865	735	550
1/4	910	770	725	725	710	605	455
3/8	775	660	620	620	610	515	385
1/2	720	610	575	575	565	480	360
5/8	630	535	505	505	490	420	315
3/4	580	490	465	465	455	385	290
1	490	420	395	395	385	325	245
1 1/4	435	370	350	350	340	290	215
1 1/2	405	345	325	325	315	270	200
2	360	305	290	290	280	240	180
2 1/2	335	285	265	265	260	220	165
3	315	265	250	250	245	210	155
3 1/2	300	255	240	240	235	200	150
4	290	245	230	230	225	195	145
5	265	225	215	215	210	175	130
6	250	210	200	200	195	165	125
8	270	225	215	215	210	180	135

GENERAL NOTES:
(a) The fitting pressure-rating applies to the largest opening of the fitting.
(b) The fitting pressure-rating is calculated, as shown in Nonmandatory Appendix A, then rounded down to the nearest unit of 5.

NOTES:
(1) For size designation of fittings, see Section 4.
(2) 1/8 nominal size is 1/4 O.D. seamless copper tube for refrigeration service, etc., as listed in ASTM B 280.
(3) 3/16 nominal size is 5/16 O.D. seamless copper tube for refrigeration service, etc., as listed in ASTM B 280.

TABLE I2 INSPECTION TOLERANCE

Standard Water Tube and Pipe Thread Sizes	Tolerance, Plus or Minus, in.
1/8 [Note (1)], 3/16 [Note (2)], 1/4, 3/8	0.05
1/2, 5/8, 3/4	0.06
1, 1 1/4, 1 1/2, 2	0.08
2 1/2, 3, 3 1/2	0.11
4 and 5	0.12
6 and 8	0.16

NOTES:
(1) 1/8 nominal size is 1/4 O.D. seamless copper tube for refrigeration service, etc., as listed in ASTM B 280.
(2) 3/16 nominal size is 5/16 O.D. seamless copper tube for refrigeration service, etc., as listed in ASTM B 280.

Copyright ASME International
Provided by IHS under license with ASME
No reproduction or networking permitted without license from IHS Not for Resale

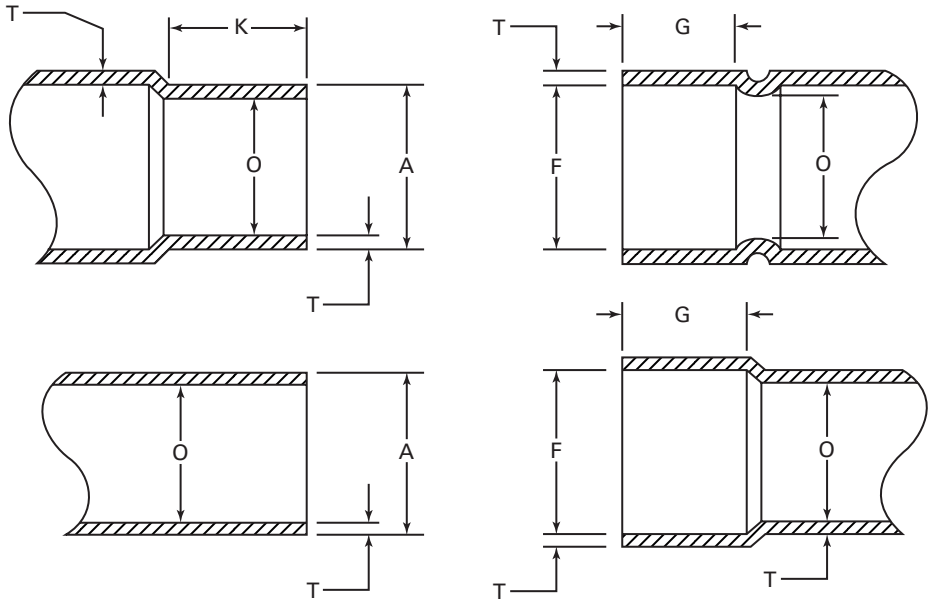

MALE END (FTG) **FEMALE END (C)**

TABLE I3 DIMENSIONS OF BRAZE-JOINT ENDS

	External End			Internal End					
	Outside Diameter, *A* [Note (2)]		Length, *K* [Note (3)]	Inside Diameter, *F* [Note (2)]		Depth, *G* [Note (4)]	Wall Thickness, *T*	Inside Diameter of Fitting, *O*	
Standard Water Tube Size [Note (1)]	Min.	Max.	Min.	Min.	Max.	Min.	Min.	Dia. Min.	Out-of-Round Max.
1/8 [Note (5)]	0.248	0.251	0.20	0.252	0.256	0.15	0.019	0.18	0.02
3/16 [Note (6)]	0.310	0.313	0.20	0.314	0.318	0.16	0.023	0.24	0.02
1/4	0.373	0.376	0.23	0.377	0.381	0.17	0.023	0.30	0.03
3/8	0.497	0.501	0.26	0.502	0.506	0.20	0.026	0.39	0.04
1/2	0.622	0.626	0.28	0.627	0.631	0.22	0.029	0.52	0.05
5/8	0.747	0.751	0.30	0.752	0.756	0.24	0.031	0.63	0.06
3/4	0.872	0.876	0.31	0.877	0.881	0.25	0.033	0.74	0.07
1	1.122	1.127	0.34	1.128	1.132	0.28	0.040	0.98	0.10
1 1/4	1.372	1.377	0.37	1.378	1.382	0.31	0.044	1.23	0.12
1 1/2	1.621	1.627	0.40	1.628	1.633	0.34	0.051	1.47	0.15
2	2.121	2.127	0.47	2.128	2.133	0.40	0.059	1.94	0.19
2 1/2	2.621	2.627	0.53	2.628	2.633	0.47	0.067	2.42	0.24
3	3.121	3.127	0.59	3.128	3.133	0.53	0.075	2.89	0.29
3 1/2	3.621	3.627	0.65	3.628	3.633	0.59	0.086	3.37	0.34
4	4.121	4.127	0.72	4.128	4.133	0.64	0.096	3.84	0.38
5	5.121	5.127	0.81	5.128	5.133	0.73	0.111	4.70	0.47
6	6.121	6.127	0.94	6.128	6.133	0.83	0.124	5.72	0.57
8	8.119	8.127	1.28	8.128	8.133	1.17	0.173	7.55	0.76

(continued)

Copyright ASME International
Provided by IHS under license with ASME
No reproduction or networking permitted without license from IHS
Not for Resale

TABLE 13 DIMENSIONS OF BRAZE-JOINT ENDS (CONT'D)

GENERAL NOTES:
(a) Dimensions are in inches.
(b) Drawings and designs of fittings are illustrative only. Dimensions herein shall govern in all cases.

NOTES:
(1) For size designation of fittings, see Section 4.
(2) For ovality, see para. 8.2.
(3) The distance from the point of tangency, at the gauge I.D. to the gauge line, shall be equal to the dimension shown in Column K.
(4) The distance from the point of tangency, at the gauge O.D. to the gauge line, shall be equal to the dimension shown in Column G.
(5) $\frac{1}{8}$ nominal size is $\frac{1}{4}$ O.D. seamless copper tube for refrigeration service, etc., as listed in ASTM B 280.
(6) $\frac{3}{16}$ nominal size is $\frac{5}{16}$ O.D. seamless copper tube for refrigeration service, etc., as listed in ASTM B 280.

Copyright ASME International
Provided by IHS under license with ASME
No reproduction or networking permitted without license from IHS Not for Resale

MANDATORY APPENDIX II
REFERENCES

The following is a list of standards and specifications referenced in this Standard showing the year of approval.

ASME B1.20.1-1983 (R 1992) Pipe Threads, General Purpose (Inch)
ASME B4.4M-1981 (R 1987) Inspection of Workpieces
ASME B31.1-1998 Power Piping
ASME B16.18-1984 (R 1994) Cast Copper Alloy Solder Joint Pressure Fittings
ASME B31.9-1996 Building Services Piping
1998 ASME Boiler & Pressure Vessel Code, Section II, Materials, Part B — Nonferrous Material Specifications

Publisher: The American Society of Mechanical Engineers (ASME International), Three Park Avenue, New York, NY 10016; Order Department: 22 Law Drive, Box 2300, Fairfield, NJ 07007-2300

ASTM B 88-96, Specification for Seamless Copper Water Tube
ASTM B 280-97 Specification for Seamless Copper Tube for Air Conditioning and Refrigeration Field Service
ASTM B 819, Specification for Seamless Copper Tube for Medical Gas Systems
ASTM E 29-93a (R99), Practice for Using Significant Digits in Test Data to Determine Conformance with Specification

Publisher: The American Society for Testing and Materials (ASTM), 100 Barr Harbor Drive, West Conshohocken, PA 19428-2959

AWS A5.8-92 Specification for Filler Metals for Brazing and Braze Welding

Publisher: American Welding Society (AWS), 550 LeJeune Road, Miami, FL 33135

ISO 9000-1: 1994 Quality management and quality assurance standards Part 1: Guidelines for selection and use
ISO 9000-2: 1997 Quality management and quality assurance standard — Part 2: Generic guidelines for the application of ISO 9001, ISO 9002, and ISO 9003
ISO 9000-3: 1991 Quality management and quality assurance standards — Part 3: Guidelines for the application of ISO 9001 to the development, supply and maintenance of software
ISO 9001: 1994 Quality systems — Model for quality assurance in design, development, production, installation, and servicing
ISO 9002: 1994 Quality systems — Model for quality assurance in production and servicing
ISO 9003: 1994 Quality systems — Model for quality assurance in final inspection and test

Publisher: International Organization for Standardization (ISO), 1 rue Varembé, Case Postale 56 CH-1121 Genève 20, Switzerland/Suisse

MSS SP-25-1998, Standard Marking System for Valves, Fittings, Flanges and Unions

Publisher: Manufacturers Standardization Society of the Valve and Fittings Industry, 127 Park Street, N.E., Vienna, VA 22180

Publications appearing above, which have been approved as American National Standards, may also be obtained from the American National Standards Institute, Inc. (ANSI), 11 West 42 Street, New York, NY 10036.

Copyright ASME International
Provided by IHS under license with ASME
No reproduction or networking permitted without license from IHS
Not for Resale

NONMANDATORY APPENDIX A
FITTING RATING

The rated internal working-pressures of the fitting are shown in Table 1 (Table I1). These values are the same as those calculated for annealed temper ASTM B 88 Type L copper water tube. The rated internal working-pressures for annealed temper ASTM B 88 Type L copper water tube are calculated as follows:

$$p = \frac{2St}{D - 0.8t}$$

where

D = maximum outside-diameter, mm (in.), from annealed temper ASTM B 88 for Type L water tube

S = allowable stress at temperature, kPa (psi), from ASME B31.1 or ASME B31.9 for annealed temper ASTM B 88 Type L copper water tube

p = rated working-pressure at temperature, kPa (psi)

t = minimum wall-thickness, mm (in.), from annealed temper ASTM B 88 for Type L water tube

Copyright ASME International
Provided by IHS under license with ASME
No reproduction or networking permitted without license from IHS
Not for Resale

NONMANDATORY APPENDIX B
QUALITY SYSTEM PROGRAM

The products manufactured in accordance with this Standard shall be produced under a quality system program following the principles of an appropriate standard from the ISO 9000 series.[1] A determination of the need for registration or certification of the product manufacturer's quality system program by an independent organization, or both, shall be the responsibility of the manufacturer. The detailed documentation demonstrating program compliance shall be available to the purchaser at the manufacturer's facility. A written summarized description of the program utilized by the product manufacturer shall be available to the purchaser upon request. The product manufacturer is defined as the entity whose name or trademark appears on the product in accordance with the marking or identification requirements of this Standard.

[1] The series is also available from the American National Standards Institute (ANSI) and the American Society for Quality Control (ASQC) as American National Standards that are identified by the prefix "Q", replacing the prefix "ISO. Each standard of the series is listed in Mandatory Appendix II, References.

Copyright ASME International
Provided by IHS under license with ASME
No reproduction or networking permitted without license from IHS Not for Resale

ISBN 0-7918-2731-3



J16301

Copyright ASME International
Provided by IHS under license with ASME
No reproduction or networking permitted without license from IHS

Not for Resale