ASME B16.5-2003
(Revision of ASME B16.5-1996)

Pipe Flanges and Flanged Fittings

NPS 1/2 Through NPS 24 Metric/Inch Standard

AN AMERICAN NATIONAL STANDARD

The American Society of Mechanical Engineers

Copyright ASME International
Provided by IHS under license with ASME
No reproduction or networking permitted without license from IHS

Not for Resale

The American Society of Mechanical Engineers

AN AMERICAN NATIONAL STANDARD

PIPE FLANGES AND FLANGED FITTINGS

NPS 1/2 Through NPS 24 Metric/Inch Standard

ASME B16.5-2003

(Revision of ASME B16.5-1996)

Copyright ASME International
Provided by IHS under license with ASME
No reproduction or networking permitted without license from IHS

Not for Resale

Date of Issuance: October 29, 2004

The next edition of this Standard is scheduled for publication in 2007. There will be no addenda or written interpretations to the requirements of this Standard issued to this edition.

ASME is the registered trademark of The American Society of Mechanical Engineers.

This code or standard was developed under procedures accredited as meeting the criteria for American National Standards. The Standards Committee that approved the code or standard was balanced to assure that individuals from competent and concerned interests have had an opportunity to participate. The proposed code or standard was made available for public review and comment that provides an opportunity for additional public input from industry, academia, regulatory agencies, and the public-at-large.

ASME does not "approve," "rate," or "endorse" any item, construction, proprietary device, or activity.

ASME does not take any position with respect to the validity of any patent rights asserted in connection with any items mentioned in this document, and does not undertake to insure anyone utilizing a standard against liability for infringement of any applicable letters patent, nor assumes any such liability. Users of a code or standard are expressly advised that determination of the validity of any such patent rights, and the risk of infringement of such rights, is entirely their own responsibility.

Participation by federal agency representative(s) or person(s) affiliated with industry is not to be interpreted as government or industry endorsement of this code or standard.

ASME accepts responsibility for only those interpretations of this document issued in accordance with the established ASME procedures and policies, which precludes the issuance of interpretations by individuals.

No part of this document may be reproduced in any form,
in an electronic retrieval system or otherwise,
without the prior written permission of the publisher.

The American Society of Mechanical Engineers
Three Park Avenue, New York, NY 10016-5990

Copyright © 2004 by
THE AMERICAN SOCIETY OF MECHANICAL ENGINEERS
All rights reserved
Printed in U.S.A.

Copyright ASME International
Provided by IHS under license with ASME
No reproduction or networking permitted without license from IHS

Not for Resale

CONTENTS

Foreword vi
Committee Roster ix
Correspondence With the B16 Committee x

1 Scope 1

2 Pressure-Temperature Ratings 2

3 Component Size 3

4 Marking 3

5 Materials 6

6 Dimensions 9

7 Tolerances 12

8 Pressure Testing 14

Figures

1 Method of Designating Location of Auxiliary Connections When Specified 15
2 Method of Designating Outlets of Reducing Fittings in Specifications 16
3 Thread Length for Connection Tapping 17
4 Socket Welding for Connections 17
5 Butt Welding for Connections 17
6 Bosses for Connections 17
7 End Flange Facings and Their Relationship to Flange Thickness and Center-to-End and End-to-End Dimensions 18
8 Bevel for Wall Thicknesses t From 5 mm to 22 mm Inclusive 20
9 Bevel for Wall Thicknesses t Greater Than 22 mm 20
10 Inside Contour for Use With Rectangular Backing Ring 21
11 Inside Contour for Use With Taper Backing Ring 21
12 Bevel for Outside Thickness 22
13 Bevel for Inside Thickness 22
14 Bevel for Combined Thickness 22
15 Straight Hub Welding Flanges 22

Tables

1A List of Material Specifications 4
1B List of Bolting Specifications Applicable ASTM Specifications 7
1C Flange Bolting Dimensional Recommendations 12
2-1.1 Pressure–Temperature Ratings for Group 1.1 Materials 23
2-1.2 Pressure–Temperature Ratings for Group 1.2 Materials 24
2-1.3 Pressure–Temperature Ratings for Group 1.3 Materials 25
2-1.4 Pressure–Temperature Ratings for Group 1.4 Materials 26
2-1.5 Pressure–Temperature Ratings for Group 1.5 Materials 27
2-1.7 Pressure–Temperature Ratings for Group 1.7 Materials 28
2-1.9 Pressure–Temperature Ratings for Group 1.9 Materials 29

Copyright ASME International
Provided by IHS under license with ASME
No reproduction or networking permitted without license from IHS
Not for Resale

2-1.10	Pressure–Temperature Ratings for Group 1.10 Materials	30
2-1.11	Pressure–Temperature Ratings for Group 1.11 Materials	31
2-1.13	Pressure–Temperature Ratings for Group 1.13 Materials	32
2-1.14	Pressure–Temperature Ratings for Group 1.14 Materials	33
2-1.15	Pressure–Temperature Ratings for Group 1.15 Materials	34
2-1.17	Pressure–Temperature Ratings for Group 1.17 Materials	35
2-2.1	Pressure–Temperature Ratings for Group 2.1 Materials	36
2-2.2	Pressure–Temperature Ratings for Group 2.2 Materials	37
2-2.3	Pressure–Temperature Ratings for Group 2.3 Materials	38
2-2.4	Pressure–Temperature Ratings for Group 2.4 Materials	39
2-2.5	Pressure–Temperature Ratings for Group 2.5 Materials	40
2-2.6	Pressure–Temperature Ratings for Group 2.6 Materials	41
2-2.7	Pressure–Temperature Ratings for Group 2.7 Materials	42
2-2.8	Pressure–Temperature Ratings for Group 2.8 Materials	43
2-2.9	Pressure–Temperature Ratings for Group 2.9 Materials	44
2-2.10	Pressure–Temperature Ratings for Group 2.10 Materials	45
2-2.11	Pressure–Temperature Ratings for Group 2.11 Materials	46
2-2.12	Pressure–Temperature Ratings for Group 2.12 Materials	47
2-3.1	Pressure–Temperature Ratings for Group 3.1 Materials	48
2-3.2	Pressure–Temperature Ratings for Group 3.2 Materials	48
2-3.3	Pressure–Temperature Ratings for Group 3.3 Materials	49
2-3.4	Pressure–Temperature Ratings for Group 3.4 Materials	50
2-3.5	Pressure–Temperature Ratings for Group 3.5 Materials	51
2-3.6	Pressure–Temperature Ratings for Group 3.6 Materials	52
2-3.7	Pressure–Temperature Ratings for Group 3.7 Materials	53
2-3.8	Pressure–Temperature Ratings for Group 3.8 Materials	54
2-3.9	Pressure–Temperature Ratings for Group 3.9 Materials	55
2-3.10	Pressure–Temperature Ratings for Group 3.10 Materials	56
2-3.11	Pressure–Temperature Ratings for Group 3.11 Materials	56
2-3.12	Pressure–Temperature Ratings for Group 3.12 Materials	57
2-3.13	Pressure–Temperature Ratings for Group 3.13 Materials	57
2-3.14	Pressure–Temperature Ratings for Group 3.14 Materials	58
2-3.15	Pressure–Temperature Ratings for Group 3.15 Materials	59
2-3.16	Pressure–Temperature Ratings for Group 3.16 Materials	60
2-3.17	Pressure–Temperature Ratings for Group 3.17 Materials	61
3	Permissible Imperfections in Flange Facing Finish for Raised Face and Large Male and Female Flanges	61
4	Dimensions of Facings (Other Than Ring Joints, All Pressure Rating Classes)	62
5	Dimensions of Ring-Joint Facings (All Pressure Rating Classes)	64
6	Reducing Threaded and Slip-On Flanges for Classes 150 Through 2500	68
7	Templates for Drilling Class 150 Flanges	69
8	Dimensions of Class 150 Flanges	70
9	Dimensions of Class 150 Flanged Fittings	73
10	Templates for Drilling Class 300 Flanges	78
11	Dimensions of Class 300 Flanges	79
12	Dimensions of Class 300 Flanged Fittings	82
13	Templates for Drilling Class 400 Flanges	86
14	Dimensions of Class 400 Flanges	87
15	Templates for Drilling Class 600 Flanges	89
16	Dimensions of Class 600 Flanges	90
17	Templates for Drilling Class 900 Flanges	92
18	Dimensions of Class 900 Flanges	93
19	Templates for Drilling Class 1500 Flanges	95
20	Dimensions of Class 1500 Flanges	96
21	Templates for Drilling Class 2500 Flanges	98

--`,,```,,,,````-`-`,,`,,`,`,,`---

Copyright ASME International
Provided by IHS under license with ASME
No reproduction or networking permitted without license from IHS

Not for Resale

22 Dimensions of Class 2500 Flanges 99

Annexes

A Threading of Pipe for American National Standard Thread Flanges..... 101
B Method Used for Establishing Pressure-Temperature Ratings 103
C Limiting Dimensions of Gaskets Other Than Ring Joint Gaskets 107
D Method for Calculating Bolt Lengths 109
E Quality System Program 111
F Pressure–Temperature Ratings and Dimensional Data for Classes 150, 300, 400, 600, 900, 1500, and 2500 Flanges and Classes 150 and 300 Flanged Fittings in U.S. Customary Units..... 112
G Dimensions of Classes 400, 600, 900, 1500, and 2500 Flanged Fittings in U.S. Customary Units..... 195
H References 214

--`,,```,,,,````-`-`,,`,,`,`,,`---

Copyright ASME International
Provided by IHS under license with ASME
No reproduction or networking permitted without license from IHS

Not for Resale

FOREWORD

In 1920, the American Engineering Standards Committee[later the American Standards Associations (ASA)] organized Sectional Committee B16 to unify and further develop standards for pipe flanges and fittings (and later for valves and gaskets). Co-sponsors of the B16 Committee were the American Society of Mechanical Engineers (ASME), the Heating and Piping Contractors National Association [now Mechanical Contractors Association of America (MCAA)], and the Manufacturers Standardization Society of the Valves and Fittings Industry (MSS). Co-sponsors were later designated as co-secretariat organizations.

The Committee soon recognized the need for standardization of steel pipe flanges. In May, 1923, Subcommittee 3 was organized to develop such standards for pressures in the 250 psi to 3200 psi range and for elevated temperatures. Active work began in October, including steel flanged fittings. The first proposed standard was submitted to the Committee in April 1926 and approved by letter ballot in December. After favorable review by the three sponsor organizations, the Standard was approved as American Tentative Standard B16e in June 1927.

Experience in using the Standard showed the need for hub dimensions of companion flanges and for other changes, including rerating of 250 lb and 1350 lb flanges and development of flanged fittings with integral bases. An investigation was made into the factors determining stiffness of flanges and flange hubs. The revised edition was approved as ASA B16E-1932.

A revision was initiated in 1936, stimulated by suggestions from Committee members and industrial users. The resulting 1939 edition contained standards for welding neck flanges (completed in March 1937), 1500 lb flanges in the 14 in. through 24 in. range 2500 lb flanges and flanged fittings in the ½ in. through 12-in. range, and dimensions for a full line of ring joint flanges developed by the American Petroleum Institute. Pressure-temperature ratings for alloy steel flanges and fittings, developed by Subcommittee 4, were included for the first time.

In August 1942, the War Production Board requested a review of measures to conserve vital materials in piping components. A special War Committee of B16 was appointed and, operating under War Standard Procedure, developed revised pressure-temperature ratings for all materials and all pressure classes. The ratings were published as American War Standard B16e5-1943. In 1945, under normal procedures, Subcommittees 3 and 4 reviewed the 1939 standard and the 1943 ratings, and recommended adoption of the wartime ratings. Their report was approved as Supplement No. 1 to B16e-1939 and published as ASA B16e6-1949. In addition to ratings, the supplement updated material specification references and added a table of metal wall thickness for welding-end valves.

Subcommittee 3 then began a revision of the entire standard. Technically, the 1949 Supplement was absorbed, new materials were recognized, a general rating method was developed and added as an appendix, and welding end preparations were expanded. Editorially, a new style of presentation was worked out, including tables rearranged for easier use. Approval by Sectional Committee, cosponsors, and ASA resulted in publication of ASA B16.5-1953 (designation changed from B16e).

Work soon began on further revisions. Class B ratings were deleted and Class A ratings were clarified as the standard. An appendix defined qualifications for gaskets, other than ring joint, which would merit the ratings. Another appendix defined the method for calculating bolt lengths (including measurement of the length of stud bolts between thread ends instead of between points). Pressure-temperature ratings for several new materials were added, the table of welding end dimensions was expanded, and the temperatures used in determining ratings were redefined. The resulting new edition, after approval, was published as ASA B16.5-1957.

The more modest revision approved as ASA B16.5-1961 changed the text to clarify the intent or to make requirements easier to administer. The next revision began in 1963 with nearly 100 comments and suggestions. No fundamental changes were made, but the text was further clarified and wall thicknesses less then ¼ in. for flanged fittings were recognized in the 1968 edition.

Copyright ASME International
Provided by IHS under license with ASME
No reproduction or networking permitted without license from IHS
Not for Resale

A new joint study of ratings between Subcommittees 3 and 4 was initiated before the next revision. Based on Subcommittee 4 report, the rating procedure was revised and a rating basis for Class 150 (150 lb) flanges was developed. New product forms, bar and plate, were added for special applications, including fabricated flanged valves and fittings. Reference to welding-end valves was not included because a separate standard for them was. Bolt length calculations based on worst case tolerances led to a revision of tabulated lengths. Testing of valve subsequently published by SC 15 closure members was added to the test requirements. Following final approval on October 23, the Standard was published as ANSI B16.5-1973.

Subcommittee N (formerly 15) was assigned responsibility for all valve standards in late 1973. Subcommittee C (formerly 3) continues to have responsibility for flange standards. A revision was accordingly initiated to remove all references to valves. At the same time, comments from users and changes in the ASME Boiler and Pressure Vessel Code led to significant revisions in the Class 150 rating basis, and, in the ratings of stainless steel and certain alloy steel flanges and flanged fittings in all rating classes. Extensive public review comments led to addition of considerations for flanged joints, for bolting and gaskets, and of marking requirements. To avoid frequent and confusing changes in ratings as further changes in Code allowable stresses are made, it was agreed with Subcommittee N to leave ratings alone unless the relevant Code stress values are changed by more than 10%. After final approval by Standards Committee, co-sponsors and ANSI, ANSI B16.5-1977, Steel Pipe Flanges and Flanged Fittings, was published on June 16, 1977.

In 1979, work began on another new edition. Materials coverage was expanded by the addition of nickel and nickel alloys. Bolting rules were revised to cover nickel alloy bolts. Bolt hole and bolting were changed to provide interchangeability between inch and metric dimensions. Metric dimensional tables were made informational rather than alternative requirements of the Standard. Final approval was granted for ANSI B16.5-1984, Pipe Flanges and Flanged Fittings on August 14.

In 1982, American National Standards Committee B16 was reorganized as an ASME Committee operating under procedures accredited by ANSI. The 1988 edition of the Standard extended nickel alloy ratings to higher temperatures, clarifying flat face flange requirements, and included other minor revisions. The Committee determined that any metric standard for flanges will stand alone, with metric bolting and gaskets; hence metric equivalents have been deleted. Following approval by the Standard Committee and ASME, approval as American National Standard was given by ANSI on April 7, 1988, with the new designation ASME/ANSI B16.5-1988.

The 1996 Edition allowed flanges marked with more than one material grade or specification, revised flange facing finish requirements, revised pressure-temperature ratings for several material groups, added a nonmandatory quality system annex, and included several other revisions. The 1996 Edition was approved by ANSI on October 3, 1996, with the new designation of ASME B16.5-1996.

The 2003 Edition includes metric units as the primary reference units while maintaining U.S. Customary units in either parenthetical or separate forms. The goal is to delete the U.S. customary units when the standard is next issued. New materials have been added while some materials have been shifted from one group to another and new material groups have been established.

All pressure-temperature ratings have been recalculated using data from the latest edition of the ASME Boiler and Pressure Vessel Code, Section II, Part D. Annex F has been added to cover pressure-temperature ratings and dimensional data for Class 150 through 2500 flanges and Class 150 and 300 flanged fittings in U.S. Customary units. Table and figure numbers in Annex F are prefixed by the letter F and correspond to table and figure numbers in the main text for metric version with the exception of some table and figure numbers that have not been used in Annex F. Of note, the flange thickness designations for Class 150 and 300 have been revised with reference to their raised faces. For these classes, the flange thickness dimensional reference planes have been altered, however, required flange thickness remains unchanged. The minimum flange thickness designation has been changed from C to t_f and it does not include 2.0 mm (0.06 in.) raised face for Class 150 and 300 raised face flanges and flanged fittings. Because of diminished interest, flanged end fittings conforming to ASME Class 400 and higher are listed only with U.S. Customary units in Annex G. In addition, straight hub welding flanges have been incorporated as a new set of flanges in Classes 150 through 2500. Also, there are numerous requirement clarifications and editorial revisions.

Copyright ASME International
Provided by IHS under license with ASME
No reproduction or networking permitted without license from IHS
Not for Resale

Following the approval of the Standards Committee and ASME, approval for the new edition was granted by the American National Standards Institute on July 9, 2003.

Requests for Interpretations or suggestion for revision should be sent to the secretary, B16 Committee, Three Park Avenue, New York, NY 10016-5990.

Copyright ASME International
Provided by IHS under license with ASME
No reproduction or networking permitted without license from IHS
Not for Resale

ASME B16 COMMITTEE
Standardization of Valves, Flanges, Fittings, and Gaskets

(The following is the roster of the Committee at the time of approval of this Standard.)

OFFICERS

H. R. Sonderegger, *Chair*
M. L. Nayyar, *Vice Chair*
P. A. Reddington, *Secretary*

COMMITTEE PERSONNEL

W. B. Bedesem, ExxonMobil Research & Engineering Co.
M. Clark, Nibco, Inc.
A. Cohen, Arthur Cohen & Associates
C. E. Floren, Mueller Co.
D. R. Frikken, Becht Engineering
A. Hamilton, American Bureau of Shipping
M. L Henderson, Forgital USA
G. A. Jolly, Vogt Valves/Flowserve
M. Katcher, Haynes International
W. G. Knecht, Consultant
R. Koester, The William Powell Co.
R. D. Manning, U.S. Coast Guard
W. N. McLean, Newco Valves
T. A. McMahon, Fisher Controls International, Inc.
M. L. Nayyar, Bechtel Power Corp.
J. D. Page, U.S. Nuclear Regulatory Commission
P. A. Reddington, The American Society of Mechanical Engineers
R. A. Schmidt, Trinity-Ladish
H. R. Sonderegger, Anvil International, Inc.
W. M. Stephan, Flexitallic LP
T. F. Stroud, Ductile Iron Pipe Research Association
R. E. White, Richard E. White & Associates PC
D. A. Williams, Southern Co. Services

SUBCOMMITTEE C — STEEL FLANGES AND FLANGED FITTINGS

M. L. Nayyar, *Chair,* Bechtel Power Corp.
J. Shih, The American Society of Mechanical Engineers
W. B. Bedesem, ExxonMobil Research & Engineering Co.
V. C. Bhasin, Sigmatech
R. Chakravarti, Foster Wheeler USA Corp.
C. E. Davila, Crane Valves
B. Dennis, Kerkau Manufacturing
J. P. Ellenberger, WFI International
D. R. Frikken, Becht Engineering
M. L. Henderson, Forgital USA
M. Katcher, Haynes International
R. Koester, The William Powell Co.
R. D. Manning, United States Coast Guard
W. N. McLean, Newco Valves
T. V. Ramakrishnan, Forged Vessel Connections
R. A. Schmidt, Trinity-Ladish
J. C. Thompson, Consultant
J. P Tucker, FlowServe

Copyright ASME International
Provided by IHS under license with ASME
No reproduction or networking permitted without license from IHS
Not for Resale

CORRESPONDENCE WITH THE B16 COMMITTEE

General. ASME Standards are developed and maintained with the intent to represent the consensus of concerned interests. As such, users of this Standard may interact with the Committee by requesting interpretations, proposing revisions, and attending Committee meetings. Correspondence should be addressed to:

Secretary, B16 Standards Committee
The American Society of Mechanical Engineers
Three Park Avenue
New York, NY 10016-5990

Proposing Revisions. Revisions are made periodically to the Standard to incorporate changes that appear necessary or desirable, as demonstrated by the experience gained from the application of the Standard. Approved revisions will be published periodically.

The Committee welcomes proposals for revisions to this Standard. Such proposals should be as specific as possible, citing the paragraph number(s), the proposed wording, and a detailed description of the reasons for the proposal, including any pertinent documentation.

Interpretations. Upon request, the B16 Committee will render an interpretation of any requirement of the Standard. Interpretations can only be rendered in response to a written request sent to the Secretary of the B16 Standards Committee.

The request for interpretation should be clear and unambiguous. It is further recommended that the inquirer submit his/her request in the following format:

Subject:	Cite the applicable paragraph number(s) and the topic of the inquiry.
Edition:	Cite the applicable edition of the Standard for which the interpretation is being requested.
Question:	Phrase the question as a request for an interpretation of a specific requirement suitable for general understanding and use, not as a request for an approval of a proprietary design or situation. The inquirer may also include any plans or drawings, which are necessary to explain the question; however, they should not contain proprietary names or information.

Requests that are not in this format will be rewritten in this format by the Committee prior to being answered, which may inadvertently change the intent of the original request.

ASME procedures provide for reconsideration of any interpretation when or if additional information that might affect an interpretation is available. Further, persons aggrieved by an interpretation may appeal to the cognizant ASME Committee or Subcommittee. ASME does not "approve," "certify," "rate," or "endorse" any item, construction, proprietary device, or activity.

Attending Committee Meetings. The B16 Standards Committee regularly holds meetings, which are open to the public. Persons wishing to attend any meeting should contact the Secretary of the B16 Standards Committee.

Copyright ASME International
Provided by IHS under license with ASME
No reproduction or networking permitted without license from IHS
Not for Resale

PIPE FLANGES AND FLANGED FITTINGS

NPS ½ THROUGH NPS 24 METRIC/INCH STANDARD

1 SCOPE

1.1 General

(a) This Standard covers pressure–temperature ratings, materials, dimensions, tolerances, marking, testing, and methods of designating openings for pipe flanges and flanged fittings. Included are

(1) flanges with rating class designations 150, 300, 400, 600, 900, 1500, and 2500 in sizes NPS ½ through NPS 24, with requirements given in both metric and U.S. Customary units with diameter of bolts and flange bolt holes expressed in inch units

(2) flanged fittings with rating class designation 150 and 300 in sizes NPS ½ through NPS 24, with requirements given in both metric and U.S. Customary units with diameter of bolts and flange bolt holes expressed in inch units

(3) flanged fittings with rating class designation 400, 600, 900, 1500, and 2500 in sizes NPS ½ through NPS 24 that are acknowledged in Annex G in which only U.S. Customary units are provided

(b) This Standard is limited to

(1) flanges and flanged fittings made from cast or forged materials

(2) blind flanges and certain reducing flanges made from cast, forged, or plate materials

Also included in this Standard are requirements and recommendations regarding flange bolting, flange gaskets, and flange joints.

1.2 References

Codes, standards, and specifications, containing provisions to the extent referenced herein, constitute requirements of this Standard. These reference documents are listed in Annex H.

1.3 Time of Purchase, Manufacture, or Installation

The pressure–temperature ratings in this Standard are applicable upon its publication to all flanges and flanged fittings within its scope which otherwise meet its requirements. For unused flanges or flanged fittings maintained in inventory, the manufacturer of the flange or flanged fittings may certify conformance to this Edition provided that it can be demonstrated that all requirements of this Edition have been met. Where such components were installed in accordance with the pressure-temperature ratings of an earlier edition of this Standard, those ratings are applicable except as may be governed by the applicable code or regulation.

1.4 User Accountability

This Standard cites duties and responsibilities that are to be assumed by the flange or flanged fitting user in the areas of, for example, application, installation, system hydrostatic testing, operation, and material selection.

1.5 Quality Systems

Requirements relating to the product manufacturer's Quality System Program are described in Annex E.

1.6 Relevant Units

This Standard states values in both metric and U.S. Customary units. As an exception, diameter of bolts and flange bolt holes are expressed in inch units only. These systems of units are to be regarded separately as standard. Within the text, the U.S. Customary units are shown in parentheses or in separate tables. The values stated in each system are not exact equivalents; therefore, it is required that each system of units be used independently of the other. Except for diameter of bolts and flange bolt holes, combining values from the two systems constitutes nonconformance with the Standard.

1.7 Service Conditions

Criteria for selection of materials suitable for particular fluid service are not within the scope of this Standard.

1.8 Convention

For the purpose of determining conformance with this Standard, the convention for fixing significant digits where limits, maximum and minimum values are specified, shall be rounded as defined in ASTM Practice E 29. This requires that an observed or calculated value shall be rounded off to the nearest unit in the last right hand digit used for expressing the limit. Decimal values and tolerances do not imply a particular method of measurement.

Copyright ASME International
Provided by IHS under license with ASME
No reproduction or networking permitted without license from IHS
Not for Resale

1.9 Denotation

1.9.1 Pressure Rating Designation. Class, followed by a dimensionless number, is the designation for pressure–temperature ratings as follows:

Class	150	300	400	600	900	1500	2500

1.9.2 Size. NPS, followed by a dimensionless number, is the designation for nominal flange or flange fitting size. NPS is related to the reference *nominal diameter*, DN, used in international standards. The relationship is, typically, as follows:

NPS	DN
1/2	15
3/4	20
1	25
1 1/4	32
1 1/2	40
2	50
2 1/2	65
3	80
4	100

GENERAL NOTE: For NPS ≥ 4, the related DN is DN = 25 (NPS).

2 PRESSURE-TEMPERATURE RATINGS

2.1 General

Pressure-temperature ratings are maximum allowable working gage pressures in bar units at the temperatures in degrees Celsius shown in Tables 2-1.1 through 2-3.17 for the applicable material and class designation. Tables F2-1.1 through F2-3.17 of Annex F list pressure-temperature ratings using psi units for pressure at the temperature in degrees Fahrenheit. For intermediate temperatures, linear interpolation is permitted. Interpolation between class designations is not permitted.

2.2 Flanged Joints

A flanged joint is composed of separate and independent, although inter-related components: the flanges, the gasket, and the bolting, which are assembled by another influence, the assembler. Proper controls must be exercised in the selection and application for all these elements to attain a joint that has acceptable leak tightness. Special techniques, such as controlled bolt tightening are described in ASME PCC-1.

2.3 Ratings of Flanged Joints

2.3.1 Basis. Pressure-temperature ratings apply to flanged joints that conform to the limitations on bolting in para. 5.3 and on gaskets in para. 5.4, which are made up in accordance with good practice for alignment and assembly (see para. 2.2). Use of these ratings for flanged joints not conforming to these limitations is the responsibility of the user.

2.3.2 Mixed Flanged Joints. If the two flanges in a flanged joint do not have the same pressure–temperature rating, the rating of the joint at any temperature is the lower of the two flange ratings at that temperature.

2.4 Rating Temperature

The temperature shown for a corresponding pressure rating is the temperature of the pressure-containing shell of the component. In general, this temperature is the same as that of the contained fluid. Use of a pressure rating corresponding to a temperature other than that of the contained fluid is the responsibility of the user, subject to the requirements of applicable codes and regulations. For any temperature below –29°C (–20°F), the rating shall be no greater than the rating shown for –29°C (–20°F). See also paras. 2.5.3 and 5.1.2.

2.5 Temperature Considerations

2.5.1 General. Use of flanged joints at either high or low temperatures shall take into consideration the risk of joint leakage due to forces and moments developed in the connected piping or equipment. Provisions in paras. 2.5.2 and 2.5.3 are included as advisory with the aim of lessening these risks.

2.5.2 High Temperature. Application at temperatures in the creep range will result in decreasing bolt loads as relaxation of flanges, bolts, and gaskets takes place. Flanged joints subjected to thermal gradients may likewise be subject to decreasing bolt loads. Decreased bolt loads diminish the capacity of the flanged joint to sustain loads effectively without leakage. At temperatures above 200°C (400°F) for Class 150 and above 400°C (750°F) for other class designations, flanged joints may develop leakage problems unless care is taken to avoid imposing severe external loads, severe thermal gradients, or both.

2.5.3 Low Temperature. Some of the materials listed in Tables 1A and 1B, notably some carbon steels, may undergo a decrease in ductility when used at low temperatures to such an extent as to be unable to safely resist shock loading, sudden changes of stress, or high stress concentration. Some codes or regulations may require impact testing for applications even where temperatures are higher than –29°C (–20°F). When such requirements apply, it is the responsibility of the user to ensure these requirements are communicated to the manufacturer prior to the time of purchase.

2.6 System Hydrostatic Testing

Flanged joints and flanged fittings may be subjected to system hydrostatic tests at a pressure of 1.5 times the 38°C (100°F) rating rounded off to the next higher 1 bar (25 psi) increment. Testing at any higher pressure is the responsibility of the user, taking into account the requirements of the applicable code or regulation.

Copyright ASME International
Provided by IHS under license with ASME
No reproduction or networking permitted without license from IHS
Not for Resale

2.7 Welding Neck Flanges

Ratings for welding neck flanges covered by this Standard are based upon their hubs at the welding end having thickness at least equal to that calculated for pipe having 276 MPa (40,000 psi) specified minimum yield strength.[1] In order to ensure adequate flange hub thickness for flange sizes NPS 2 and larger, the bore of a welding neck flange, dimension B in the various dimensional tables, shall not exceed $B_{max.}$ determined as follows:

$$B_{max} = A\left(1 - \frac{C_o p_c}{50{,}000}\right)$$

where:

A = tabulated hub diameter, beginning of chamfer as listed in the dimensional tables
B_{max} = maximum permissible diameter for the bore of a welding neck flange
C_o = 14.5 when p_c is expressed in bar units or 1.0 when p_c is expressed in psi units
p_c = ceiling pressure value at 38°C (100°F), Tables B1 and B2 of Annex B

The resultant units for diameter B_{max} are the same as those entered for diameter A.

The tabulated ratings for welding neck flanges are independent of components to which they may be attached and the pressure rating of the flange shall not be exceeded. Attachment welds should be made in accordance with the applicable code or regulation. See para. 6.7 and Figs. 12, 13, and 14 for weld end dimensional requirements.

2.8 Straight Hub Welding Flanges

Straight hub welding flanges are an extension of welding neck flanges and have straight hubs of uniform thickness. With the exception of the following, the straight hub welding flanges shall have dimensions of the welding neck flanges of the size and class set forth in Tables 8, 11, 14, 16, 18, 20, and 22 (Tables F8, F11, F14, F16, F18, F20, and F22 of Annex F). See Fig. 15.

2.8.1 Length Through Hub. The length through hub shall be 229 mm (9 in.) for NPS 4 and smaller and 305 mm (12 in.) for larger than NPS 4. Other lengths may be furnished by agreement between the end user and the manufacturer.

2.8.2 Bore. The bore diameter shall be equal to B dimension of the welding neck flange. Other bores may be furnished by agreement between the end user and the manufacturer. In no case shall the bore diameter exceed the bore of the same size and class lapped flange.

2.8.3 Hub End. The standard flange shall be provided with square cut end. The end user may specify welding end preparation in accordance with para. 6.7.

2.9 Multiple Material Grades

Material for flanges and flanged fittings may meet the requirements of more than one specification or the requirements of more than one grade of a specification listed in Table 1A. In either case, the pressure-temperature ratings for any of these specifications or grades may be used provided the material is marked in accordance with para. 4.2.8.

3 COMPONENT SIZE

3.1 Nominal Pipe Size

As applied in this Standard, the use of the phrase "nominal pipe size" or the designation NPS followed by a dimensionless number is for the purpose of pipe, flange, or flanged fitting end connection size identification. The number is not necessarily the same as the flange or flanged fitting inside diameter.

3.2 Reducing Fittings

Reducing fittings shall be designated by the NPS for the openings in the sequence indicated in the sketches of Fig. 2.

3.3 Reducing Flanges

Reducing flanges shall be designated by the NPS for each opening. See examples in Note (4) of Table 6 (Table F6 of Annex F).

4 MARKING

4.1 General

Except as modified herein, flanges and flanged fittings shall be marked as required in MSS SP-25, except as noted in para. 4.2.

4.2 Identification Markings

4.2.1 Name. The manufacturer's name or trademark shall be applied.

4.2.2 Material. Material shall be identified in the following way:

(a) Cast flanges and flanged fittings shall be marked with the ASTM specification,[2] grade identification symbol (letters and numbers), and the melt number or melt identification.

(b) Plate flanges, forged flanges, and flanged fittings shall be marked with the ASTM specification number and grade identification symbol.[2]

[1] For flanges to be attached to high strength pipe with large inside diameters resulting from thin wall sections, see MSS SP-44.

[2] An ASME Boiler and Pressure Vessel Code, Section II specification number may be substituted for an ASTM specification number provided the requirements of the ASME specification are identical to or more stringent than the ASTM specification for the Grade, Class, or type of material.

Copyright ASME International
Provided by IHS under license with ASME
No reproduction or networking permitted without license from IHS Not for Resale

Table 1A List of Material Specifications

Material Group	Nominal Designation	Pressure–Temperature Rating Table	Applicable ASTM Specifications [Note (1)]		
			Forgings	Castings	Plates
1.1	C–Si	2-1.1	A 105	A 216 Gr. WCB	A 515 Gr. 70
	C–Mn–Si		A 350 Gr. LF2		A 516 Gr. 70
					A 537 Cl. 1
	C–Mn–Si–V		A 350 Gr. LF6 Cl. 1		
	$3\frac{1}{2}$ Ni		A 350 Gr. LF3		
1.2	C–Mn–Si	2-1.2		A 216 Gr. WCC	
				A 352 Gr. LCC	
	C–Mn–Si–V		A 350 Gr. LF6 Cl. 2		
	$2\frac{1}{2}$Ni			A 352 Gr. LC2	A 203 Gr. B
	$3\frac{1}{2}$Ni			A 352 Gr. LC3	A 203 Gr. E
1.3	C–Si	2-1.3		A 352 Gr. LCB	A 515 Gr. 65
	C–Mn–Si				A 516 Gr. 65
	2 $\frac{1}{2}$Ni				A 203 Gr. A
	3 $\frac{1}{2}$Ni				A 203 Gr. D
	C–$\frac{1}{2}$Mo			A 217 Gr. WC1	
				A 352 Gr. LC1	
1.4	C–Si	2-1.4			A 515 Gr. 60
	C–Mn–Si		A 350 Gr. LF1 Cl. 1		A 516 Gr. 60
1.5	C–$\frac{1}{2}$Mo	2-1.5	A 182 Gr. F1		A 204 Gr. A
					A 204 Gr. B
1.7	$\frac{1}{2}$Cr–$\frac{1}{2}$Mo	2-1.7	A 182 Gr. F2		
	Ni–$\frac{1}{2}$Cr–$\frac{1}{2}$Mo			A 217 Gr. WC4	
	$\frac{3}{4}$Ni–$\frac{3}{4}$Cr–1Mo			A 217 Gr. WC5	
1.9	$1\frac{1}{4}$Cr–$\frac{1}{2}$Mo	2-1.9		A 217 Gr. WC6	
	$1\frac{1}{4}$Cr–$\frac{1}{2}$Mo–Si		A 182 Gr. F11 CL.2		A 387 Gr. 11 Cl. 2
1.10	2 $\frac{1}{4}$Cr–1Mo	2-1.10	A 182 Gr. F22 Cl. 3	A 217 Gr. WC9	A 387 Gr. 22 Cl. 2
1.11	C–$\frac{1}{2}$Mo	2-1.11			A 204 Gr. C
1.13	5Cr–$\frac{1}{2}$Mo	2-1.13	A 182 Gr. F5a	A 217 Gr. C5	
1.14	9Cr–1M0	2-1.14	A 182 Gr. F9	A 217 Gr. C12	
1.15	9Cr–1M0–V	2-1.15	A 182 Gr. F91	A 217 Gr. C12A	A 387 Gr. 91 Cl. 2
1.17	1Cr–$\frac{1}{2}$Mo	2-1.17	A 182 Gr. F12 Cl. 2		
	5Cr–$\frac{1}{2}$Mo		A 182 Gr. F5		
2.1	18Cr–8Ni	2-2.1	A 182 Gr. F304	A 351 Gr. CF3	A 240 Gr. 304
			A 182 Gr. F304H	A 351 Gr. CF8	A 240 Gr. 304H
2.2	16Cr–12Ni–2Mo	2-2.2	A 182 Gr. F316	A 351 Gr. CF3M	A 240 Gr. 316
			A 182 Gr. F316H	A 351 Gr. CF8M	A 240 Gr. 316H
	18Cr–13Ni–3Mo		A 182 Gr. F317		A 240 Gr. 317
	19Cr–10Ni–3Mo			A 351 Gr. CG8M	
2.3	18Cr–8Ni	2-2.3	A 182 Gr. F304L		A 240 Gr. 304L
	16Cr–12Ni–2Mo		A 182 Gr. F316L		A 240 Gr. 316L

Copyright ASME International
Provided by IHS under license with ASME
No reproduction or networking permitted without license from IHS
Not for Resale

Table 1A List of Material Specifications (Cont'd)

Material Group	Nominal Designation	Pressure–Temperature Rating Table	Applicable ASTM Specifications [Note (1)]		
			Forgings	Castings	Plates
2.4	18Cr–10Ni–Ti	2-2.4	A 182 Gr. F321		A 240 Gr. 321
			A 182 Gr. F321H		A 240 Gr. 321H
2.5	18Cr–10Ni–Cb	2-2.5	A 182 Gr. F347		A 240 Gr. 347
			A 182 Gr. F347H		A 240 Gr. 347H
			A 182 Gr. F348		A 240 Gr. 348
			A 182 Gr. F348H		A 240 Gr. 348H
2.6	23Cr–12Ni	2-2.6			A 240 Gr. 309H
2.7	25Cr–20Ni	2-2.7	A 182 Gr. F310		A 240 Gr. 310H
2.8	20Cr–18Ni–6Mo	2-2.8	A 182 Gr. F44	A 351 Gr. CK3MCuN	A 240 Gr. S31254
	22Cr–5Ni–3Mo–N		A 182 Gr. F51		A 240 Gr. S31803
	25Cr–7Ni–4Mo–N		A 182 Gr. F53		A 240 Gr. S32750
	24Cr–10Ni–4Mo–V			A 351 Gr. CE8MN	
	25Cr–5Ni–2Mo–3Cu			A 351 Gr. CD4MCu	
	25Cr–7Ni–3.5Mo–W–Cb			A 351 Gr. CD3MWCuN	
	25Cr–7Ni–3.5Mo–N–Cu–W		A 182 Gr. F55		A 240 Gr. S32760
2.9	23Cr–12Ni	2-2.9			A 240 Gr. 309S
	25Cr–20Ni				A 240 Gr. 310S
2.10	25Cr–12Ni	2-2.10		A 351 Gr. CH8	
				A 351 Gr. CH20	
2.11	18Cr–10Ni–Cb	2-2.11		A 351 Gr. CF8C	
2.12	25Cr–20Ni	2-2.12		A 351 Gr. CK20	
3.1	35Ni–35Fe–10Cr–Cb	2-3.1	B 462 Gr. N08020		B 463 Gr. N08020
3.2	99.0Ni	2-3.2	B 160 Gr. N02200		B 162 Gr. N02200
3.3	99.0Ni–Low C	2-3.3	B 160 Gr. N02201		B 162 Gr. N02201
3.4	67Ni–30Cu	2-3.4	B 564 Gr. N04400		B 127 Gr. N04400
	67Ni–30Cu–S		B 164 Gr. N04405		
3.5	72Ni–15Cr–8Fe	2-3.5	B 564 Gr. N06600		B 168 Gr. N06600
3.6	33Ni–42Fe–21Cr	2-3.6	B 564 Gr. N08800		B 409 Gr. N08800
3.7	65Ni–28Mo–2Fe	2-3.7	B 462 Gr. N10665		B 333 Gr. N10665
	64Ni–29.5Mo–2Cr–2Fe–Mn–W		B 462 Gr. N10675		B 333 Gr. N10675
3.8	54Ni–16Mo–15Cr	2-3.8	B 462 Gr. N10276		B 575 Gr. N10276
	60Ni–22Cr–9Mo–3.5Cb		B 564 Gr. N06625		B 443 Gr. N06625
	62Ni–28Mo–5Fe		B 335 Gr. N10001		B 333 Gr. N10001
	70Ni–16Mo–7Cr–5Fe		B 573 Gr. N10003		B 434 Gr. N10003
	61Ni–16Mo–16Cr		B 574 Gr. N06455		B 575 Gr. N06455
	42Ni–21.5Cr–3Mo–2.3Cu		B 564 Gr. N08825		B 424 Gr. N08825
	55Ni–21Cr–13.5Mo		B 462 Gr. N06022		B 575 Gr. N06022
	55Ni–23Cr–16Mo–1.6Cu		B 462 Gr. N06200		B 575 Gr. N06200
3.9	47Ni–22Cr–9Mo–I8Fe	2-3.9	B 572 Gr. N06002		B 435 Gr. N06002
3.10	25Ni–46Fe–21Cr–5Mo	2-3.10	B 672 Gr. N08700		B 599 Gr. N08700

--`,,```,,,,````-`-`,,`,,`,`,,`---
Copyright ASME International
Provided by IHS under license with ASME
No reproduction or networking permitted without license from IHS
Not for Resale

Table 1A List of Material Specifications (Cont'd)

Material Group	Nominal Designation	Pressure–Temperature Rating Table	Applicable ASTM Specifications [Note (1)]		
			Forgings	Castings	Plates
3.11	44Fe–25Ni–21Cr–Mo	2-3.11	B 649 Gr. N08904		B 625 Gr. N08904
3.12	26Ni–43Fe–22Cr–5Mo	2-3.12	B 621 Gr. N08320		B 620 Gr. N08320
	47Ni–22Cr–20Fe–7Mo		B 581 Gr. N06985		B 582 Gr. N06985
	46Fe–24Ni–21Cr–6Mo–Cu–N		B 462 Gr. N08367	A 351 Gr. CN3MN	B 688 Gr. N08367
3.13	49Ni–25Cr–18Fe–6Mo	2-3.13	B 581 Gr. N06975		B 582 Gr. N06975
	Ni–Fe–Cr–Mo–Cu–Low C		B 564 Gr. N08031		B 625 Gr. N08031
3.14	47Ni–22Cr–19Fe–6Mo	2-3.14	B 581 Gr. N06007		B 582 Gr. N06007
	40Ni–29Cr–15Fe–5Mo		B 462 Gr. N06030		B 582 Gr. N06030
3.15	33Ni–42Fe–21Cr	2-3.15	B 564 Gr. N08810		B 409 Gr. N08810
3.16	35Ni–19Cr–1¼Si	2-3.16	B 511 Gr. N08330		B 536 Gr. N08330
3.17	29Ni–20.5Cr–3.5Cu–2.5Mo	2-3.17		A 351 Gr. CN7M	

GENERAL NOTES:

(a) For temperature limitations, see notes in Tables 2-1.1 through 2-3.17 (Tables F2-1.1 through F2-3.17 of Annex F).

(b) Plate materials are listed only for use as blind flanges and reducing flanges without hubs (see para. 5.1). Additional plate materials listed in ASME B16.34 may also be used with corresponding B16.34 Standard Class ratings.

NOTE:

(1) ASME Boiler and Pressure Vessel Code, Section II materials may also be used provided the requirements of the ASME specification are identical to or more stringent than the corresponding ASTM specification for the Grade, Class, or Type listed.

(c) A manufacturer may supplement these mandatory material indications with his trade designation for the material grade, but confusion of symbols shall be avoided.

(d) For flanges and flanged fittings manufactured from material that meets the requirements of more than one specification or grade of a specification listed in Table 1A, see para. 4.2.8.

4.2.3 Rating Designation. The flange or flanged fitting shall be marked with the number that corresponds to its pressure rating class designation (i.e., 150, 300, 400, 600, 900, 1500, or 2500).

4.2.4 Conformance. The designation B16 or B16.5 shall be applied to the flange or flanged fitting, preferably located adjacent to the class designation, to indicate conformance to this Standard. The use of the prefix ASME is optional.

4.2.5 Temperature. Temperature markings are not required on flanges or flanged fittings, however, if marked, the temperature shall be shown with its corresponding tabulated pressure rating for the material.

4.2.6 Size. The NPS designation shall be marked on flanges and flanged fittings. Reducing flanges and reducing flanged fittings shall be marked with the applicable NPS designations as required by paras. 3.2 and 3.3.

4.2.7 Ring Joint Flanges. The edge (periphery) of each ring joint flange shall be marked with the letter R and the corresponding ring groove number.

4.2.8 Multiple Material Marking. Material for components that meet the requirements for more than one specification or grade of a specification listed in Table 1A may, at the manufacturer's option, be marked with more than one of the applicable specification or grade symbols. These identification markings shall be placed so as to avoid confusion in identification. The multiple marking shall be in accordance with the guidelines set out in ASME Boiler and Pressure Vessel Code, Section II, Part D, Appendix 7.

5 MATERIALS

5.1 General

Materials required for flanges and flanged fittings are listed in Table 1A with the restriction that plate materials shall be used only for blind flanges and reducing flanges without hubs. Recommended bolting materials are listed in Table 1B (See para. 5.3). Corresponding materials listed in Section II of the ASME Boiler and Pressure Vessel Code may be used provided that the requirements of the ASME specification are identical to or more stringent than the ASTM specification for the Grade, Class, or type of material.

Copyright ASME International
Provided by IHS under license with ASME
No reproduction or networking permitted without license from IHS
Not for Resale

Table 1B List of Bolting Specifications
Applicable ASTM Specifications

Bolting Materials [Note (1)]											
High Strength [Note (2)]			Intermediate Strength [Note (3)]			Low Strength [Note (4)]			Nickel and Special Alloy [Note (5)]		
Spec. No.	Grade	Notes	Spec. No.	Grade	Notes	Spec. No.	Grade	Notes	Spec. No.	Grade	Notes
A 193	B7	. . .	A 193	B5	. . .	A 193	B8 Cl.1	(6)	B164	. . .	(7)(8)(9)
A 193	B16	. . .	A 193	B6	. . .	A 193	B8C Cl.1	(6)			
			A 193	B6X	. . .	A 193	B8M Cl.1	(6)	B166	. . .	(7)(8)(9)
A 320	L7	(10)	A 193	B7M	. . .	A 193	B8T Cl.1	(6)			
A 320	L7A	(10)									
A 320	L7B	(10)	A 193	B8 Cl.2	(11)	A 193	B8A	(6)	B335	N10665	(7)
										N10675	(7)
			A 193	B8 Cl.2B	(11)						
A 320	L7C	(10)	A 193	B8C Cl.2	(11)	A 193	B8CA	. . .			
A 320	L43	(10)	A 193	B8M Cl.2	(11)	A 193	B8MA	. . .	B408	. . .	(7)(8)(9)
			A 193	B8M Cl.2B	(11)						
			A 193	B8T Cl.2	(11)	A 193	B8TA	(6)			
A 354	BC	. . .							B473	. . .	(7)
A 354	BD	. . .	A 320	B8 Cl.2	(11)	A 307	B	(12)			
			A 320	B8C Cl.2	(11)				B574	. . .	(7)
A 540	B21	. . .	A 320	B8F Cl.2	(11)	A 320	B8 Cl.1	(6)			
A 540	B22	. . .	A 320	B8M Cl.2	(11)	A 320	B8C Cl.1	(6)			
A 540	B23	. . .	A 320	B8T Cl.2	(11)	A 320	B8M Cl.1	(6)			
A 540	B24	. . .				A 320	B8T Cl.1	(6)			
			A 449		(13)						
			A 453	651	(14)						
			A 453	660	(14)						

GENERAL NOTES:

(a) Bolting material shall not be used beyond temperature limits specified in the governing code.

(b) ASME Boiler and Pressure Vessel Code, Section II materials may also be used provided the requirements of the ASME specification are identical or more stringent than the corresponding ASTM specification for the Grade, Class, or Type listed.

NOTES:

(1) Repair welding of bolting material is prohibited.

(2) These bolting materials may be used with all listed materials and gaskets.

(3) These bolting materials may be used with all listed materials and gaskets, provided it has been verified that a sealed joint can be maintained under rated working pressure and temperature.

(4) These bolting materials may be used with all listed materials but are limited to Class 150 and Class 300 joints. See para. 5.3.4 for recommended gasket practices.

(5) These materials may be used as bolting with comparable nickel and special alloy parts.

(6) This austenitic stainless material has been carbide solution treated but not strain hardened. Use A 194 nuts of corresponding material.

(7) Nuts may be machined from the same material or may be of a compatible grade of ASTM A 194.

(8) Maximum operating temperature is arbitrarily set at 260°C (500°F) unless the material has been annealed, solution annealed, or hot finished because hard temper adversely affects design stress in the creep rupture range.

(9) Forging quality is not permitted unless the producer last heating or working these parts tests them as required for other permitted conditions in the same specification and certifies their final tensile, yield, and elongation properties to equal or exceed the requirements for one of the other permitted conditions.

(10) This ferritic material is intended for low temperature service. Use A 194 Gr. 4 or Gr. 7 nuts.

(11) This austenitic stainless material has been carbide solution treated and strain hardened. Use A 194 nuts of corresponding material.

(12) This carbon steel fastener shall not be used above 200°C (400°F) or below −29°C (−20°F). See also Note (4). Bolts with drilled or undersized heads shall not be used.

(13) Acceptable nuts for use with quenched and tempered bolts are A 194 Gr. 2 or Gr. 2H Mechanical property requirements for studs shall be the same as those for bolts.

(14) This special alloy is intended for high temperature service with austenitic stainless steel.

--`,,```,,,,````-`-`,,`,,`,`,,`---

Copyright ASME International
Provided by IHS under license with ASME
No reproduction or networking permitted without license from IHS Not for Resale

5.1.1 Application. Criteria for the selection of materials are not within the scope of this Standard. The possibility of material deterioration in service should be considered by the user. Carbide phase conversion to graphite and excessive oxidation of ferritic materials, susceptibility to intergranular corrosion of austenitic materials, or grain boundary attack of nickel base alloys are among those items requiring attention. A discussion of precautionary considerations can be found in ASME B31.3, Appendix F; Section II, Part D, Appendix 6; and Section III, Division 1, Appendix W of the ASME Boiler and Pressure Vessel Code.

5.1.2 Toughness. Some of the materials listed in Table 1A undergo a decrease in toughness when used at low temperatures, to the extent that Codes referencing the Standard may require impact tests for application even at temperatures higher than −7°C (+20°F). It is the responsibility of the user to assure that such testing is performed.

5.1.3 Responsibility. When service conditions dictate the implementation of special material requirements [e.g., using a Group 2 material above 538°C (1000°F)], it is the user's responsibility to so specify to the manufacturer in order to ensure compliance with metallurgical requirements listed in the notes in Tables 2-1.1 through 2-3.17 (Tables F2-1.1 through F2-3.17 of Annex F):

5.1.4 Cast Surfaces. Cast surfaces of component pressure boundaries shall be in accordance with MSS SP-55 except that all Type I defects are unacceptable and defects in excess of Plates "a" and "b" for Type II through Type XII are unacceptable.

5.2 Mechanical Properties

Mechanical properties shall be obtained from test specimens that represent the final heat treated condition of the material required by the material specification.

5.3 Bolting

5.3.1 General. Bolting listed in Table 1B is recommended for use in flanged joints covered by this Standard. Bolting of other material may be used if permitted by the applicable code or government regulation. Bolting materials are subject to the limitations given in paras. 5.3.2, 5.3.3, 5.3.4, and 5.3.5.

5.3.2 High Strength Bolting. Bolting materials having allowable stresses not less than those for ASTM A 193 Grade B7 are listed as high strength in Table 1B. These and other materials of comparable strength may be used in any flanged joint.

5.3.3 Intermediate Strength Bolting. Bolting materials listed as intermediate strength in Table 1B, and other bolting of comparable strength, may be used in any flanged joint provided the user verifies their ability to seat the selected gasket and maintain a sealed joint under expected operating condition.

5.3.4 Low Strength Bolting. Bolting materials having no more than 206 MPa (30 ksi) specified minimum yield strength are listed as low strength in Table 1B. These materials and others of comparable strength are to be used only in Class 150 and 300 flanged joints and only with gaskets described in para. 5.4.2. Flanged assemblies using low strength carbon steel bolts should not be used above 200°C (400°F) or below −29°C (−20°F).

5.3.5 Bolting to Gray Cast Iron Flanges. The following recommendations are made in recognition of the low ductility of gray cast iron.

(a) Alignment of flange faces is essential along with control of assembly bolt torque so as not to over-stress the cast iron flanges. Care must also be exercised to ensure that piping loads transmitted to cast iron flanges are controlled, taking into account its lack of ductility and recognizing that cast iron flanges should not be used where suddenly applied loads such as rapid pressure fluctuation may occur.

(b) Where Class 150 steel flanges are bolted to Class 125 cast iron flanges, the gaskets should be made of Annex C, Group No. Ia materials, the steel flanges should have flat faces, and

(1) low strength bolting within the limitations of para. 5.3.4 should be used with ring gaskets extending to the bolt holes, or

(2) bolting of low (para. 5.3.4), intermediate (para. 5.3.3), or high (para. 5.3.2) strength may be used with full face gaskets extending to the outside diameters of the flanges

(c) Where Class 300 steel flanges are bolted to Class 250 cast iron flanges, the gaskets should be made of Annex C, Group No. Ia materials, and

(1) low strength bolting within the limitations of para. 5.3.4 should be used with gaskets extending to the bolt holes and with the flanges having either raised or flat faces, or

(2) bolting of low (para. 5.3.4), intermediate (para. 5.3.3), or high (para. 5.3.2) strength may be used with full face gaskets extending to the outside diameters of the flanges and with both the Class 300, steel and Class 250 cast iron flanges having flat faces

5.4 Gaskets

5.4.1 General. Ring joint gasket materials shall conform to ASME B16.20. Materials for other gaskets are described in Annex C. The user is responsible for selection of gasket materials which will withstand the expected bolt loading without injurious crushing, and which are suitable for the service conditions. Particular attention should be given to gasket selection if a system hydrostatic test approaches or exceeds the test pressure specified in para. 2.6.

Copyright ASME International
Provided by IHS under license with ASME
No reproduction or networking permitted without license from IHS
Not for Resale

5.4.2 Gaskets for Low Strength Bolting. If bolting listed as low strength in Table 1B is used, gaskets shown in Annex C, Table C1, Group No. Ia, are recommended.

5.4.3 Gaskets for Class 150 Flanged Joints. It is recommended that only Annex C, Table C1, Group No. I gaskets be used for Class 150 flanged joints. When the ring joint or spiral wound gasket is selected, it is recommended that line flanges be of the welding neck or lapped joint type.

6 DIMENSIONS

6.1 Flanged Fittings Wall Thickness

6.1.1 Minimum Wall Thickness. For inspection purposes the minimum wall thickness t_m of flanged fittings at the time of manufacture shall be as shown in Tables 9 and 12 (Tables F9 and F12 of Annex F), except as provided in para. 6.1.2. Additional metal thickness needed to withstand installation bolt-up assembly stresses, shapes other than circular, and stress concentrations must be determined by the manufacturer, since these factors vary widely. In particular, 45-deg laterals, true Ys, and crosses may require additional reinforcement to compensate for inherent weaknesses in these shapes.

6.1.2 Fitting Local Areas. Local areas having less than minimum wall thickness are acceptable provided that all of the following conditions are satisfied:

(a) The area of sub-minimum thickness can be enclosed by a circle whose diameter is no greater than $0.35\sqrt{dt_m}$, where d is the tabulated fitting inside diameter and t_m is the minimum wall thickness as shown in the tables listed in para. 6.1.1.

(b) Measured thickness is not less than $0.75\ t_m$.

(c) Enclosure circles are separated from each other by an edge-to-edge distance of more than $1.75\sqrt{dt_m}$.

6.2 Fitting Center-to-Contact Surface and Center-to-End

6.2.1 Design. A principle of design in this Standard is to maintain a fixed position for the flange edge with reference to the body of the fitting. In case of raised face flanged fittings, the outside edge of the flange includes the raised face (see para. 6.4).

6.2.2 Standard Fittings. Center-to-contact surface, center-to-flange edge, and center-to end (ring joint) dimensions are shown in Tables 9 and 12 (Tables F9 and F12 of Annex F).

6.2.3 Reducing Fittings. Center-to-contact surface or center-to-flange edge dimensions for all openings shall be the same as those of straight size fittings of the largest opening. The contact surface-to-contact surface or flange edge-to-flange edge dimensions for all combinations of reducers and eccentric reducers shall be as listed for the larger opening.

6.2.4 Side Outlet Fittings. Side outlet elbows, side outlet tees, and side outlet crosses shall have all openings on intersecting centerlines, and the center-to-contact surface dimensions of the side outlet shall be the same as for the largest opening. Long radius elbows with one side outlet shall have the side outlet on the radial centerline of the elbow, and the center-to-contact surface dimension of the side outlet shall be the same as for the regular 90 deg elbow of the largest opening.

6.2.5 Special Degree Elbows. Special degree elbows ranging from 1 deg to 45 deg, inclusive, shall have the same center-to-contact surface dimensions as 45 deg elbows, and those over 45 deg and up to 90 deg, inclusive, shall have the same center-to-contact surface dimensions as 90 deg elbows. The angle designation of an elbow is its deflection from straight line flow and is also the angle between the flange faces.

6.3 Flat Face Flanges

6.3.1 General. This Standard permits flat face flanges in all classes.

6.3.2 Conversion. A raised face may be removed from a raised face flange to convert it to a flat face flange provided that the required dimension t_f, shown in Fig. 7 (Fig. F7 of Annex F) is maintained.

6.3.3 Facing. The flat face flange facing finish shall be in conformance with para. 6.4.5 for the full width of the seating surface for the gasket.

6.4 Flange Facings

6.4.1 General. Figure 7 (Fig. F7. of Annex F) shows dimensional relationships for various flange types and for pipe lap facings to be used with lap joints. Table 4 (Table F4 of Annex F) lists dimensions for facings other than ring joint. Table 5 (Table F5 of Annex F) lists dimensions for ring joint facings. Classes 150 and 300 pipe flanges and companion flanges of fittings are regularly furnished with 2 mm (0.06 in.) raised face, which is in addition to the minimum flange thickness, t_f. Classes 400, 600, 900, 1500, and 2500 pipe flanges and companion flanges of fittings are regularly furnished with 7 mm (0.25 in.) raised face, which is in addition to the minimum flange thickness, t_f.

6.4.2 Other Than Lapped Joints. For joints other than lapped joints, the requirements of paras. 6.4.2.1 and 6.4.2.2 shall apply.

6.4.2.1 Raised Face and Tongue Face. In the case of flanges having raised face, tongue or male face, the minimum flange thickness, t_f shall be provided and then the raised face, tongue, or male face shall be added thereto.

Copyright ASME International
Provided by IHS under license with ASME
No reproduction or networking permitted without license from IHS Not for Resale

6.4.2.2 Grooves. For flanges that have a ring joint, groove, or female face, the minimum flange thickness shall first be provided and then sufficient thickness added thereto so that the bottom of the ring joint groove, or the contact face of the groove or female face is in the same plane as the flange edge of a full thickness flange.

6.4.3 Lapped Joint Flanges. Lapped joint flanges shall be furnished with flat faces as illustrated in Tables 8, 11, 14, 16, 18, 20, and 22 (Tables F8, F11, F14, F16, F18, F20, and F22 of Annex F). Lap joint stub ends shall be in accordance with Fig. 7 (Fig. F7 of Annex F) and paras. 6.4.3.1 through 6.4.3.3.

6.4.3.1 Raised Face. The finished thickness of the lap shall be no less than nominal pipe wall thickness.

6.4.3.2 Large Male and Female. The finished height of the male face shall be the greater of the wall thickness of the pipe used or 7 mm (0.25 in.). The thickness of lap that remains after machining the female face shall be no less than the nominal wall thickness of pipe used.

6.4.3.3 Tongue and Groove. The thickness of the lap remaining after machining the tongue or groove face shall be no less than the nominal wall thickness of the pipe used.

6.4.3.4 Ring Joint. The thickness of the lap remaining after machining the ring groove shall be no less than the nominal wall thickness of pipe used.

6.4.3.5 Lap Joint Facing Outside Diameters. The outside diameters of the lap for ring joints are shown in Table 5 (Table F5 of Annex F), dimension *K*. The outside diameters of laps for large female, large tongue and groove, and small tongue and groove are shown in Table 4 (Table F4 of Annex F). Small male and female facings for lapped joints are not covered by this Standard.

6.4.4 Blind Flanges. Blind flanges need not be faced in the center if, when this center part is raised, its diameter is at least 25 mm (1 in.) smaller than the inside diameter of fittings of the corresponding pressure class, as given in Tables 9 and 12 (Tables F9 and F12) or 25 mm (1 in.) smaller than the mating pipe inside diameter. When the center part is depressed, its diameter shall not be greater than the inside diameter of the corresponding pressure class fittings, as given in Tables 9 and 12 (Tables F9 and F12). Machining of the depressed center is not required.

6.4.5 Flange Facing Finish. Flange facing finishes shall be in accordance with paras. 6.4.5.1 through 6.4.5.3, except that other finishes may be furnished by agreement between the user and the manufacturer. The finish of the gasket contact faces shall be judged by visual comparison with Ra standards (see ASME B46.1) and not by instruments having stylus tracers and electronic amplification.

6.4.5.1 Tongue and Groove and Small Male and Female. The gasket contact surface finish shall not exceed 3.2 μm (125 μin.) roughness.

6.4.5.2 Ring Joint. The side wall surface finish of the gasket groove shall not exceed 1.6 μm (63 μin.) roughness.

6.4.5.3 Other Flange Facings. Either a serrated concentric or serrated spiral finish having a resultant surface finish from 3.2 to 6.3 μm (125 to 250 μin.) average roughness shall be furnished. The cutting tool employed should have an approximate 1.5 mm (0.06 in.) or larger radius, and there should be from 1.8 grooves/mm through 2.2 grooves/mm (45 grooves/in. through 55 grooves/in.).

6.4.6 Flange Facing Finish Imperfections. Imperfections in the flange facing finish shall not exceed the dimensions shown in Table 3 (Table F3 of Annex F). A distance of at least four times the maximum radial projection shall separate adjacent imperfections. A radial projection shall be measured by the difference between an outer radius and an inner radius encompassing the imperfection where the radii are struck from the centerline of the bore. Imperfections less than half the depth of the serrations shall not be considered cause for rejection. Protrusions above the serrations are not permitted.

6.5 Flange Bolt Holes

Bolt holes are in multiples of four. Bolt holes shall be equally spaced and pairs of bolt holes shall straddle fitting centerlines.

6.6 Bolting Bearing Surfaces

Flanges and flanged fittings shall have bearing surfaces for bolting that are parallel to the flange face within 1 deg. Any back facing or spot facing shall not reduce the flange thickness, t_f below the dimensions given in Tables 8, 9, 11, 12, 14, 16, 18, 20, and 22 (Tables F8, F9, F11, F12, F14, F16, F18, F20, and F22 of Annex F). Spot facing or back facing shall be in accordance with MSS SP-9.

6.7 Welding End Preparation for Welding Neck Flanges

6.7.1 Illustrations. Welding ends are illustrated in Figs. 8, 9, 10, 11 (Figs. F8, F9, F10, and F11 of Annex F) and Figs. 12, 13, and 14.

6.7.2 Contours. The contours of the outside of the welding neck beyond the welding groove are shown in Figs. 8 and 9 (Figs. F8 and F9 of Annex F) and Figs. 12 and 14.

6.7.3 Bores. Straight through bores shown in Figs. 8 and 9 (Figs. F8 and F9 of Annex F) are standard unless

Copyright ASME International
Provided by IHS under license with ASME
No reproduction or networking permitted without license from IHS Not for Resale

specifically ordered to suit the special conditions illustrated in Figs. 10 and 11 (Figs. F10 and F11 of Annex F) and Figs. 13 and 14.

6.7.4 Other Welding Ends. Other welding end preparations furnished by agreement of purchaser and manufacturer do not invalidate compliance with this Standard.

6.8 Reducing Flanges

6.8.1 Drilling, Outside Diameter, Thickness, and Facing Dimensions. Flange drilling, outside diameter, thickness, and facing are the same as those of the standard flange of the size from which the reduction is being made.

6.8.2 Hub Dimensions

6.8.2.1 Threaded, Socket Weld, and Slip-on Flanges. The hub dimension shall be at least as large as those of the standard flange of the size to which the reduction is being made. The hub may be larger or omitted as detailed in Table 6 (Table F6 of Annex F).

6.8.2.2 Welding Neck Flanges. The hub dimensions shall be the same as those of the standard flange of the size to which the reduction is being made.

6.9 Threaded Flanges

6.9.1 Thread Dimensions. Except as provided in Notes (4) and (5) of Table 4 (Table F4 of Annex F), threaded flanges shall have a taper pipe thread conforming to ASME B1.20.1. The thread shall be concentric with the axis of the flange opening, and variations in alignment (perpendicularity with reference to the flange face) shall not exceed 5 mm/m (0.06 in./ft).

6.9.2 Threads for Class 150 Flanges. Class 150 flanges are made without a counterbore. The threads shall be chamfered approximately to the major diameter of the thread at the back of the flange at an angle of approximately 45 deg with the axis of the thread. The chamfer shall be concentric with the thread and shall be included in the measurement of the thread length.

6.9.3 Threads for Class 300 and Higher Flanges. Class 300 and higher pressure class flanges shall be made with a counterbore at the back of the flange. The threads shall be chamfered to the diameter of the counterbore at an angle of approximately 45 deg with the axis of the threads. The counterbore and chamfer shall be concentric with the thread.

6.9.4 Reducing Flange Thread Length. The minimum length of effective thread in reducing flanges shall be at least equal to dimension T of the corresponding class of threaded flange as shown in Tables 8, 9, 11, 12, 14, 16, 18, 20, and 22 (Tables F8, F9, F11, F12, F14, F16, F18, F20, and F22). Threads do not necessarily extend to the face of the flange. See Table 6 (Table F6 of Annex F) for reducing threaded flanges.

6.9.5 Thread Gaging. The gaging notch of the working gage shall come flush with the bottom of the chamfer in all threaded flanges and shall be considered as being the intersection of the chamfer cone and the pitch cone of the thread. This depth of chamfer is approximately equal to one-half the pitch of the thread. The maximum allowable thread variation is one turn large or small from the gaging notch.

6.9.6 Assembly Using Power Equipment. For ASME B1.20.1 external pipe threads, Annex A specifies the distance and number of turns that external pipe threads may be made longer than regular for use with the higher pressure flanges to bring the small end of the thread close to the face of the flange when the parts are assembled by power equipment.

6.10 Flange Bolting Dimensions

6.10.1 Dimensional Standards. Stud bolts, threaded at both ends or threaded full length, or bolts may be used in flange joints. Dimensional recommendations for bolts, stud bolts, and nuts are shown in Table 1C. See para. 5.3 for bolting material recommendations.

6.10.2 Bolt Lengths. Stud bolt lengths, including the height of two heavy hexagon nuts, are shown as dimension L in Tables 7, 10, 13, 15, 17, 19, and 21 (Tables F7, F10, F13, F15, F17, F19, and F21 of Annex F). The tabulated stud bolt length L does not include the height of end points. An end point is defined as an unthreaded length, such as a chamfer, which extends beyond the thread. The method of calculating bolt lengths is explained in Annex D. The tabulated bolt lengths are reference dimensions. Users may select other bolting lengths.

6.10.3 Bolting Recommendations. For flange joints, stud bolts with a nut at each end are recommended for all applications and especially for high temperature service.

6.11 Gaskets for Line Flanges

6.11.1 Ring Joint. Ring joint gasket dimensions shall conform to ASME B16.20.

6.11.2 Contact Width. For flanges having large or small tongue-and-groove faces, all gaskets, except solid flat metal gaskets, shall cover the bottom of the groove with minimum clearance. [See para. 7.3(a) for tolerance applicable to groove.] Solid flat metal gaskets shall have contact width not greater than for Annex C, Group III gaskets.

6.11.3 Bearing Surface. For flanges with small male-and-female face, care must be taken to assure that adequate bearing surface is provided for the gaskets. In

Copyright ASME International
Provided by IHS under license with ASME
No reproduction or networking permitted without license from IHS Not for Resale

Table 1C Flange Bolting Dimensional Recommendations

Product	Carbon Steel	Alloy Steel
Stud Bolts	ASME B18.2.1	ASME B18.2.1
Bolts smaller than 3/4 in.	ASME B18.2.1, square or heavy hex head	ASME B18.2.1, heavy hex head
Bolts equal to or larger than 3/4 in.	ASME B18.2.1, square or heavy hex head	ASME B18.2.1, heavy hex head
Nuts smaller than 3/4 in.	ASME B18.2.2, heavy hex	ASME B18.2.2, heavy hex
Nuts equal to or larger than 3/4 in.	ASME B18.2.2, hex or heavy hex	ASME B18.2.2, heavy hex
External threads	ASME B1.1, Cl. 2A course series	ASME B1.1, Cl. 2A course series up through 1 in.; eight thread series for larger bolts
Internal threads	ASME B1.1, Cl. 2B course series	ASME B1.1, Cl. 2B course series up through 1 in.; eight thread series for larger bolts

particular, care is necessary when the joint is made on the end of pipe as shown in Fig. 7 (Fig. F7 of Annex F).

6.12 Auxiliary Connections

6.12.1 General. Auxiliary connections or openings for flanged fittings are not required unless specified by the purchaser. Welding to attach auxiliary connections to flanged fittings shall be made by a qualified welder using a qualified weld procedure in accordance with Section IX of the ASME Boiler and Pressure Vessel Code.

6.12.2 Pipe Thread Tapping. Holes may be tapped in the wall of a fitting if the metal is thick enough to allow the effective thread length specified in Fig. 3 (Fig. F3 of Annex F). Where thread length is insufficient or the tapped hole needs reinforcement, a boss shall be added.

6.12.3 Sockets. Sockets for socket welding connections may be provided in the wall of a fitting if the metal is thick enough to afford the depth of socket and retaining wall specified in Fig. 4 (Fig. F4 of Annex F). Where the wall thickness is insufficient, or the size of the connection requires opening reinforcement, a boss shall be added. See Fig. 6 (Fig. F6 of Annex F).

6.12.4 Butt Welding. Connections may be attached by butt welding directly to the wall of the fitting. See Fig. 5 (Fig. F5 of Annex F). Where the size of an opening requires reinforcement, a boss shall be added.

6.12.5 Bosses. Where bosses are required, the diameters shall be no less than those shown in Fig. 6 (Fig. F6 of Annex F), and the height shall provide lengths as specified in Fig. 3 or 4 (Fig. F3 or F4 of Annex F).

6.12.6 Size. Unless otherwise specified, auxiliary connections shall be of the pipe sizes given below.

Fitting Size	Connection Size (NPS)
2 ≤ NPS ≤ 4	1/2
5 ≤ NPS ≤ 8	3/4
NPS ≥ 10	1

6.12.7 Designating Locations. The designation of locations for auxiliary connections for flanged fittings is shown in Fig. 1. A letter is used to designate each location.

7 TOLERANCES

7.1 General

For the purpose of determining conformance with this Standard, the convention for fixing significant digits where limits, maximum or minimum values are specified, shall be rounded as defined in ASTM Practice E 29. This requires that an observed or calculated value shall be rounded to the nearest unit in the last right hand digit used for expressing the limit. The listing of decimal tolerances does not imply a particular method of measurement.

7.2 Center-to-Contact Surfaces and Center-to-End Tolerances

Required tolerances for various flanges and flanged fitting elements are as follows:

(a) Center-to-Contact Surfaces Other Than Ring Joint:

NPS ≤ 10	±1.0 mm (±0.03 in.)
NPS ≥ 12	±1.5 mm (±0.06 in.)

Copyright ASME International
Provided by IHS under license with ASME
No reproduction or networking permitted without license from IHS Not for Resale

(b) Center-to-End (Ring Joint):

NPS ≤ 10	±1.0 mm (±0.03 in.)
NPS ≥ 12	±1.5 mm (±0.06 in.)

(c) Contact Surface-to-Contact Surface Other Than Ring Joint:

NPS ≤ 10	±2.0 mm (±0.06 in.)
NPS ≥ 12	±3.0 mm (±0.12 in.)

(d) End-to-End (Ring Joint):

NPS ≤ 10	±2.0 mm (±0.06 in.)
NPS ≥ 12	±3.0 mm (±0.12 in.)

7.3 Facings

Required tolerances for various flange and flanged fitting facings are as follows:

(a) Inside and outside diameter of large and small tongue and groove and female, ±0.5 mm (±0.02 in.).

(b) Outside diameter, 2.0 mm (0.06 in.) raised face, ±1.0 mm (±0.03 in.).

(c) Outside diameter, 7.0 mm (0.25 in.) raised face, ±0.5 mm (±0.02 in.).

(d) Ring joint groove tolerances are shown in Table 5 (Table F5 of Annex F).

7.4 Flange Thickness

Required tolerances for flange thickness are as follows.

NPS ≤ 18,	+3.0, −0.0 mm (+0.12, −0.0 in.)
NPS ≥ 20,	+5.0, −0.0 mm (+0.19, −0.0 in.)

The plus tolerance is applicable to bolting bearing surfaces whether as-forged, as-cast, spot-faced or back-faced. See para. 6.6.

7.5 Welding End Flange Ends and Hubs

7.5.1 Outside Diameter. Required tolerances for the nominal outside diameter dimension *A* of Figs. 8 and 9 (Figs. F8 and F9 of Annex F) of welding ends of welding neck flanges are as follows:

NPS ≤ 5	+2.0, −1.0 mm (+0.09, −0.03 in.)
NPS ≥ 6	+4.0, −1.0 mm (+0.16, −0.03 in.)

7.5.2 Inside Diameter. Required tolerances for the nominal inside diameter of welding ends of welding neck flanges and smaller bore of socket welding flanges (dimension *B* in the referenced figures) are as follows:

For Figs. 8 and 9 (Figs. F8 and F9 of Annex F) the tolerances are

NPS ≤ 10	±1.0 mm (±0.03 in.)
12 ≤ NPS ≤ 18	±1.5 mm (±0.06 in.)
NPS ≥ 20,	+3.0, −1.5 mm (+0.12, −0.06 in.)

For Fig. 10 (Fig. F10 of Annex F) the tolerances are

NPS ≤ 10	+0.0, −1.0 mm (+0.0, −0.03 in.)
NPS ≥ 12	+0.0, −1.5 mm (+0.0, −0.06 in.)

7.5.3 Backing Ring Contact Surface. Required tolerances for the bore of the backing ring contact surface of welding neck flanges, dimension *C* of Figs. 10 and 11 (Figs. F10 and F11 of Annex F) are as follows.

2 ≤ NPS ≤ 24 +0.25, −0.0 mm (+ 0.01, −0.0 in.)

7.5.4 Hub Thickness. Despite the tolerances specified for dimensions *A* and *B*, the thickness of the hub at the welding end shall not be less than 87½% of the nominal thickness of the pipe, having an under tolerance of 12.5% for the pipe wall thickness to which the flange is to be attached, or the minimum wall thickness as specified by the purchaser.

7.6 Length Through Hub on Welding Neck Flanges

The required tolerances for the length through hubs on welding neck flanges are as follows.

NPS ≤ 4	±1.5 mm (±0.06 in.)
5 ≤ NPS ≤ 10	+1.5, −3.0 mm (+0.06, −0.12 in.)
NPS ≥ 12	+3.0, −5.0 mm (+0.12, −0.18 in.)

7.7 Flange Bore

7.7.1 Lapped, Slip-on, and Socket Welding Flange Bores. The required tolerances for lapped, slip-on, and socket welding flange bores are as follows.

NPS ≤ 10	+1.0, −0.0 mm (+0.03, −0.0 in.)
NPS ≥ 12	+1.5, −0.0 mm (+ 0.06, −0.0 in.)

7.7.2 Counterbores, Threaded Flanges. The required tolerances for threaded flange counterbores are as follows.

NPS ≤ 10	+1.0, −0.0 mm (+0.03, −0.0 in.)
NPS ≥ 12	+1.5, −0.0 mm (+0.06, −0.0 in.)

7.7.3 Counterbores, Socket Welding Flanges. The required tolerances for socket end counterbores is as follows.

½ ≤ NPS ≤ 3 ±0.25 mm (±0.010 in.)

7.8 Drilling and Facing

7.8.1 Bolt Circle Diameter. The required tolerance for all bolt circle diameters is

±1.5 mm (±0.06 in.)

7.8.2 Bolt Hole to Bolt Hole. The required tolerance for the center-to-center of adjacent bolt holes is

±0.8 mm (±0.03 in.)

7.8.3 Bolt Circle Concentricity. The required tolerances for concentricity between the flange bolt circle diameter and machined facing diameters are as follows.

NPS ≤ 2½	0.8 mm (0.03 in.)
NPS ≥ 3	1.5 mm (0.06 in.)

Copyright ASME International
Provided by IHS under license with ASME
No reproduction or networking permitted without license from IHS Not for Resale

8 PRESSURE TESTING

8.1 Flange Test

Flanges are not required to be pressure tested.

8.2 Flanged Fitting Test

8.2.1 Shell Pressure Test. Each flanged fitting shall be given a shell pressure test.

8.2.2 Test Conditions. The shell pressure test for flanged fittings shall be at a pressure no less than 1.5 times the 38°C (100°F) pressure rating rounded off to the next higher 1 bar (25 psi) increment.

8.2.3 Test Fluid. The pressure test shall be made using water, which may contain a corrosion inhibitor or kerosene as the test fluid. Other suitable test fluids may be used provided their viscosity is no greater than that of water. The test fluid temperature shall not exceed 50°C (125°F).

8.2.4 Test Duration. The test duration shall be as follows.

Fitting Size	Duration, sec
NPS ≤ 2	60
2½ ≤ NPS ≤ 8	120
NPS ≥ 10	180

8.2.5 Acceptance. No visible leakage is permitted through the pressure boundary wall.

Copyright ASME International
Provided by IHS under license with ASME
No reproduction or networking permitted without license from IHS
Not for Resale

FLANGED FITTINGS

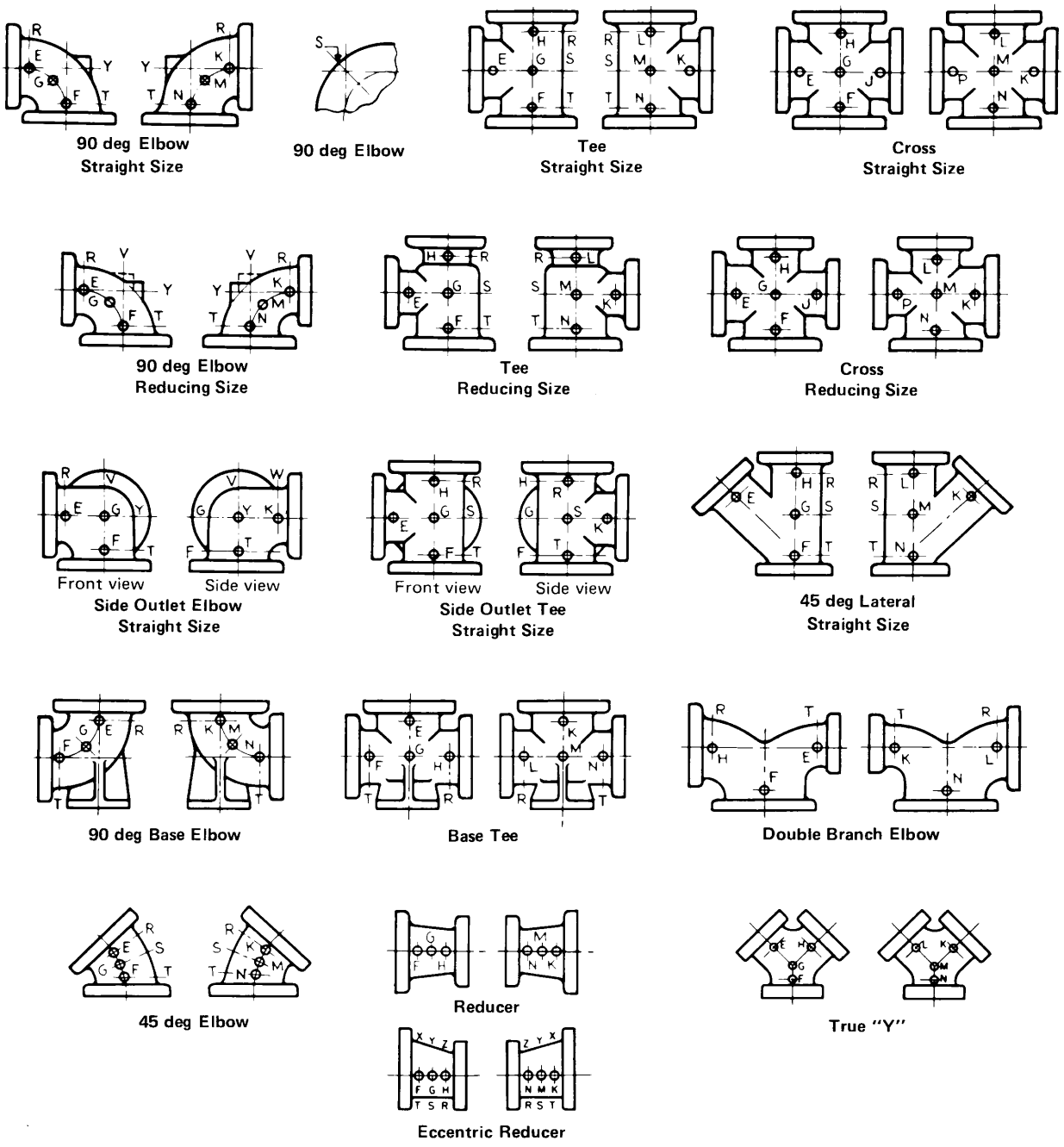

GENERAL NOTE: The above sketches show views of the same fitting and represent fittings with symmetrical shapes, with the exception of the side outlet elbow and the side outlet tee (straight sizes). Sketches are illustrative only, and do not imply required design (see para. 6.12).

Fig. 1 Method of Designating Location of Auxiliary Connections When Specified

Copyright ASME International
Provided by IHS under license with ASME
No reproduction or networking permitted without license from IHS
Not for Resale

FLANGED FITTINGS

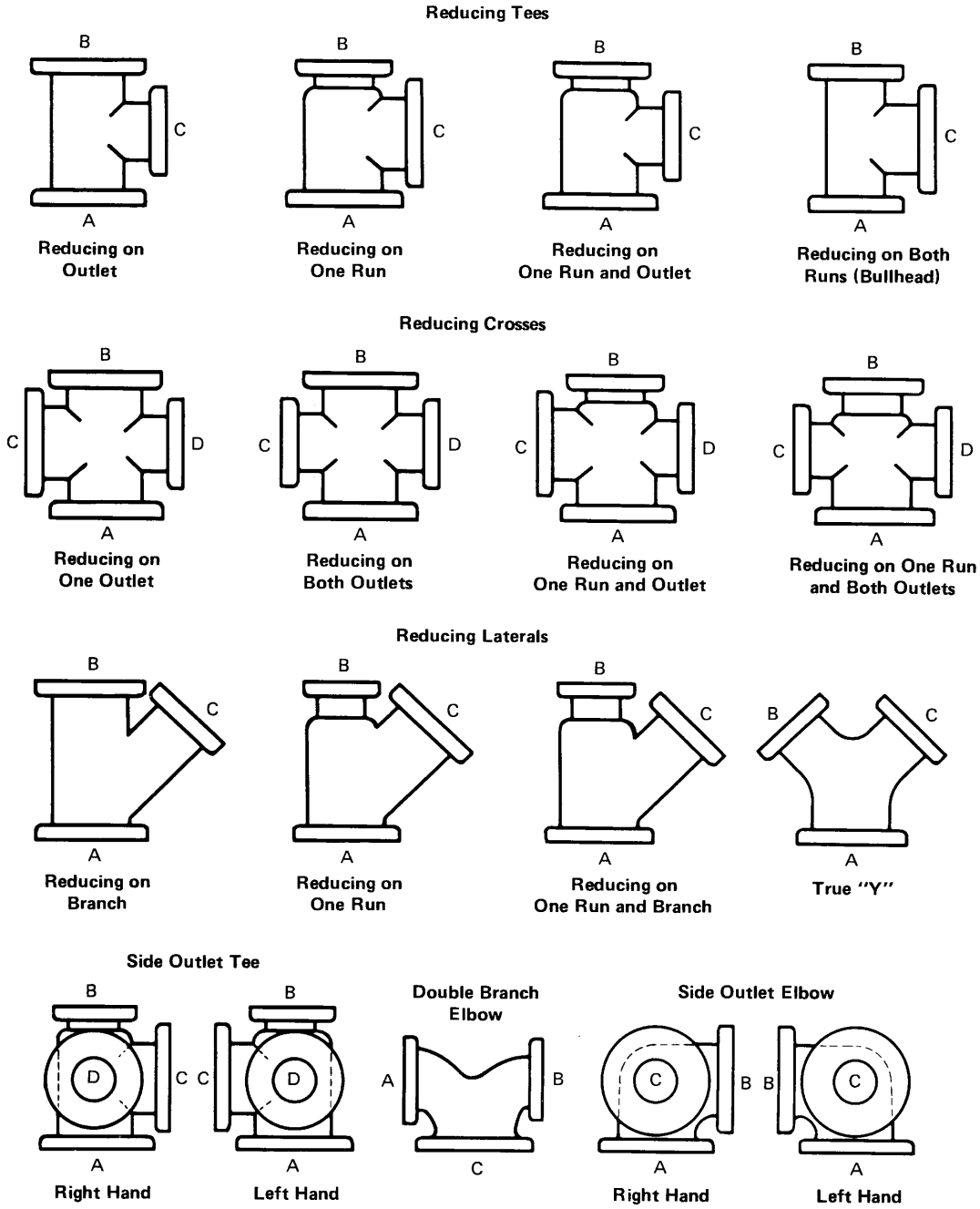

GENERAL NOTES:

(a) The largest opening establishes the basic size of a reducing fitting. The largest opening is named first, except that for bull head tees, which are reducing on both runs and for double branch elbows where both branches are reducing, the oulet is the largest opening and named last in both cases.

(b) In designating the openings of reducing fittings, they should be read in the order indicated by the sequence of the letters A, B, C, and D. In designating the outlets of side outlet reducing fittings, the side outlet is named last, and in the case of the cross, which is not shown, the side outlet is designated by the Letter E.

(c) Sketches are illustrative only, and do not imply required design. (See para. 3.2).

Fig. 2 Method of Designating Outlets of Reducing Fittings in Specifications

Copyright ASME International
Provided by IHS under license with ASME
No reproduction or networking permitted without license from IHS
Not for Resale

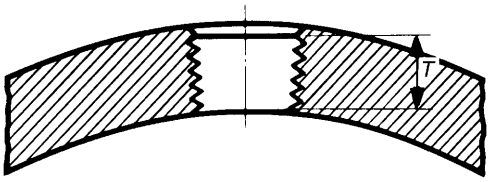

Connection Size, NPS	3/8	1/2	3/4	1	1 1/4	1 1/2	2
Thread length *T*, mm [Note (1)]	10.5	13.5	14.0	17.5	18.1	18.3	19.4

GENERAL NOTE: See paras. 6.12.2, 6.12.5, and 6.12.6.

NOTE:

(1) In no case shall the effective length of thread *T* be less than that shown in Table above. These lengths are equal to the effective thread length of external pipe threads (ASME B1.20.1).

Fig. 3 Thread Length for Connection Tapping

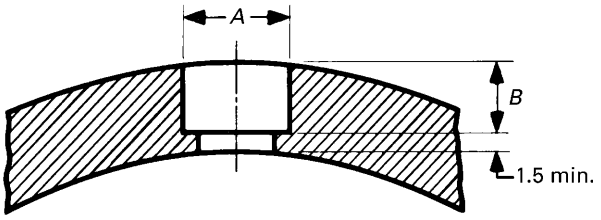

Connection Size, NPS	3/8	1/2	3/4	1	1 1/4	1 1/2	2
Minimum diameter of socket *A*, mm	17.5	21.8	26.9	33.8	42.7	48.8	61.2
Minimum depth *B*, mm	4.8	4.8	6.4	6.4	6.4	6.4	7.9

GENERAL NOTE: See paras. 6.12.3, 6.12.5, and 6.12.6.

Fig. 4 Socket Welding for Connections

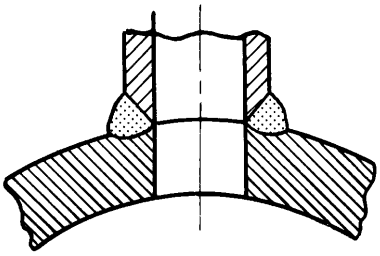

GENERAL NOTE: See paras. 6.12.4 and 6.12.5.

Fig. 5 Butt Welding for Connections

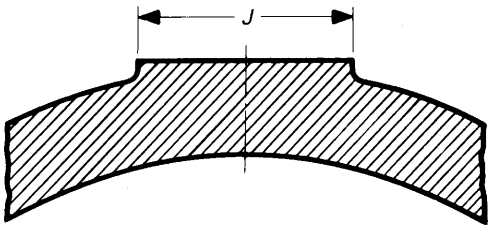

Connection Size, NPS	3/8	1/2	3/4	1	1 1/4	1 1/2	2
Minimum boss diameter *J*, mm	31.8	38.1	44.5	53.8	63.5	69.8	85.8

GENERAL NOTES:

(a) See para. 6.12.5.

(b) Dimensions are in millimeters. For dimensions in inches, refer to Annex F, Figs. F3, F4, F5, and F6.

Fig. 6 Bosses for Connections

Copyright ASME International
Provided by IHS under license with ASME
No reproduction or networking permitted without license from IHS Not for Resale

END FLANGE FACINGS
Flange Thickness and Center-to-End Dimensions
Classes 150 through 2500

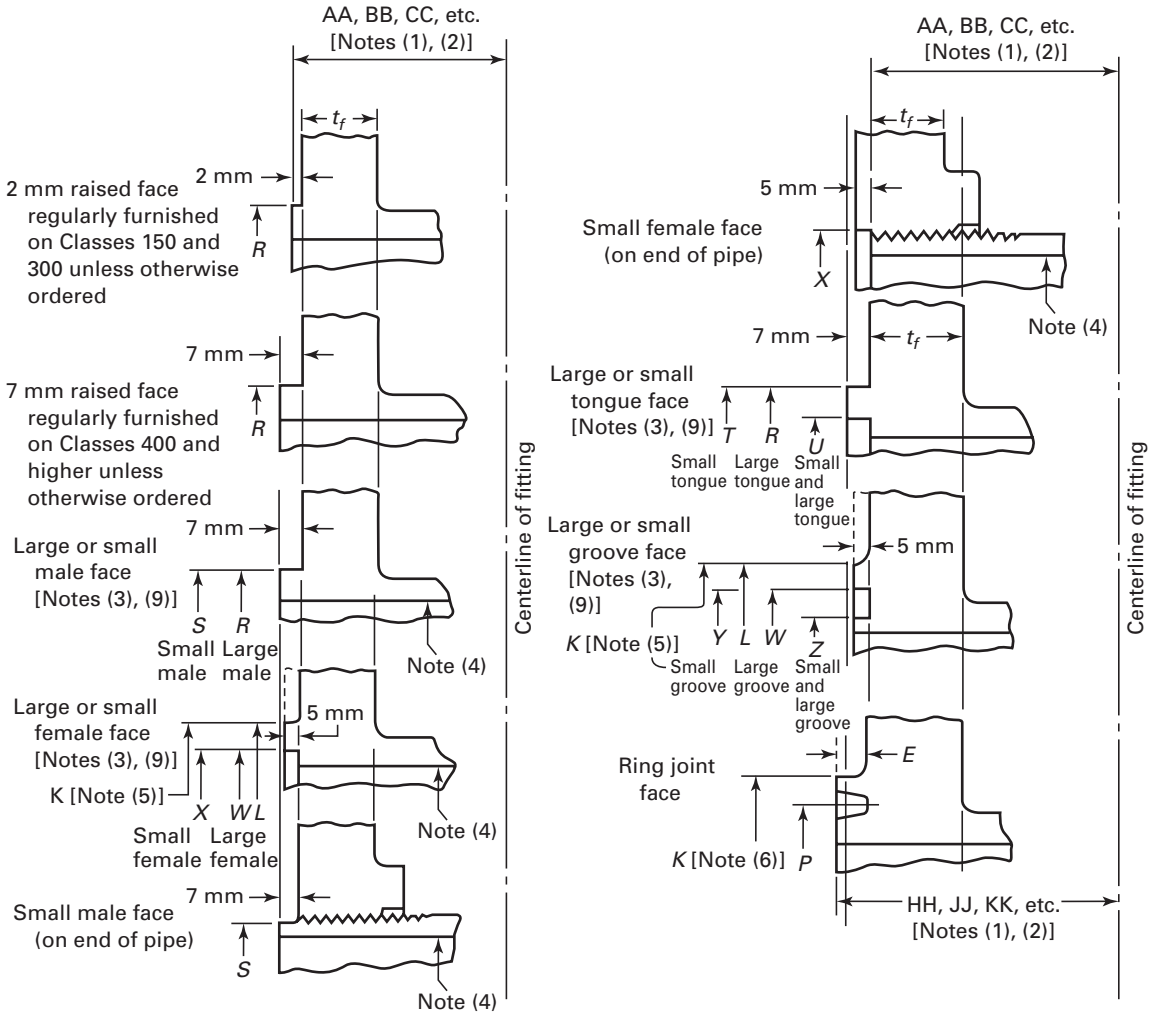

Fig. 7 End Flange Facings and Their Relationship to Flange Thickness and Center-to-End and End-to-End Dimensions

Copyright ASME International
Provided by IHS under license with ASME
No reproduction or networking permitted without license from IHS
Not for Resale

END FLANGE FACINGS
Flange Thickness and End-to-End Dimensions
Lapped Joints

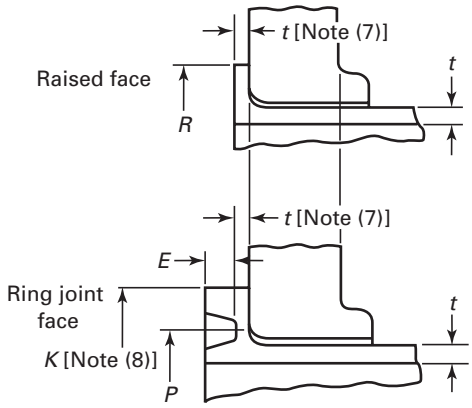

GENERAL NOTE: Dimensions are in millimeters. For dimensions in inches, refer to Annex F, Fig. F7.

NOTES:

(1) See paras. 6.2 and 6.4.
(2) See Tables 7 through 22.
(3) See Table 4 for dimensions of facings (other than ring joint) and Table 5 for ring joint facing.
(4) For small male and female joints, care should be taken in the use of these dimensions to insure that the inside diameter of fitting or pipe is small enough to permit sufficient bearing surface to prevent crushing of the gasket (See Table 4.). This applies particularly on lines where the joint is made on the end of the pipe. Threaded companion flanges for small male and female joints are furnished with plain face and are threaded with American National Standard Locknut Thread (NPSL).
(5) See Table 4.
(6) See Table 5.
(7) See para. 6.4.3.
(8) See para. 6.4.3.5 and Table 5.
(9) Large male and female faces and large tongue and groove are not applicable to Class 150 because of potential dimensional conflicts.

Fig. 7 End Flange Facings and Their Relationship to Flange Thickness and Center-to-End and End-to-End Dimensions (Cont'd)

Copyright ASME International
Provided by IHS under license with ASME
No reproduction or networking permitted without license from IHS
Not for Resale

WELDING ENDS
(Welding Neck Flanges, No Backing Rings)

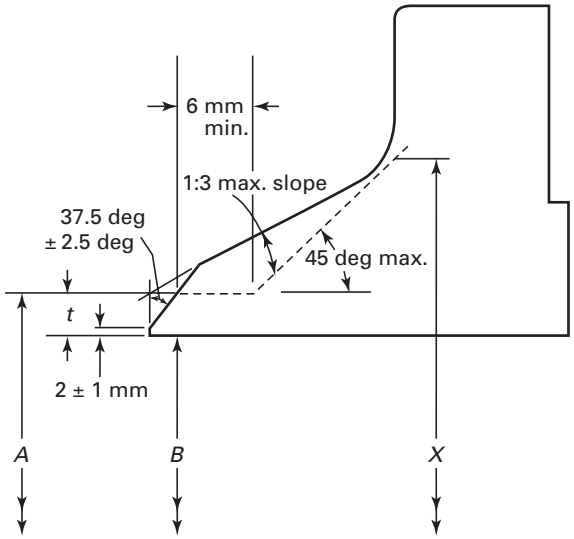

A = nominal outside diameter of pipe
B = nominal inside diameter of pipe
t = nominal wall thickness of pipe

GENERAL NOTES:

(a) Dimensions are in millimeters. For dimensions in inches, refer to Annex F, Figs. F8 and F9.
(b) See paras. 6.7, 6.8, and 7.4 for details and tolerances.
(c) See Figs. 10 and 11 for additional details of welding ends.
(d) When the thickness of the hub at the bevel is greater than that of the pipe to which the flange is joined and the additional thickness is provided on the outside diameter, a taper weld having a slope not exceeding 1 to 3 may be employed or, alternatively, the greater outside diameter may be tapered at the same maximum slope or less, from a point on the welding bevel equal to the outside diameter of the mating pipe. Similarly, when the greater thickness is provided on the inside of the flange, it shall be taper-bored from the welding end at a slope not exceeding 1 to 3. When flanges covered by this Standard are intended for services with light wall, higher strength pipe, the thickness of the hub at the bevel may be greater than that of the pipe to which the flange is joined. Under these conditions, a single taper hub may be provided, and the outside diameter of the hub at the base (dimension *X*) may also be modified. The additional thickness may be provided on either inside or outside or partially on each side, but the total additional thickness shall not exceed one-half times the nominal wall thickness of intended mating pipe. See Figs. 12, 13, and 14.
(e) The hub transition from the *A* diameter to the *X* diameter shall fall within the maximum and minimum envelope outlined by the 1:3 max. slope and the dashed line.
(f) For welding end dimensions, refer to ASME B16.25.

Fig. 8 Bevel for Wall Thicknesses *t* From 5 mm to 22 mm Inclusive

WELDING ENDS
(Welding Neck Flanges, No Backing Rings)

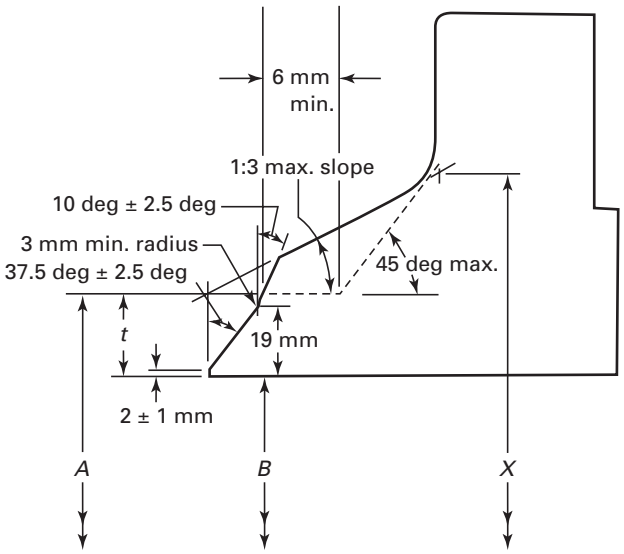

A = nominal outside diameter of pipe
B = nominal inside diameter of pipe
t = nominal wall thickness of pipe

GENERAL NOTE: Please see General Notes for Fig. 8.

Fig. 9 Bevel for Wall Thicknesses *t* Greater Than 22 mm

Copyright ASME International
Provided by IHS under license with ASME
No reproduction or networking permitted without license from IHS
Not for Resale

WELDING ENDS
(Welding Neck Flanges)

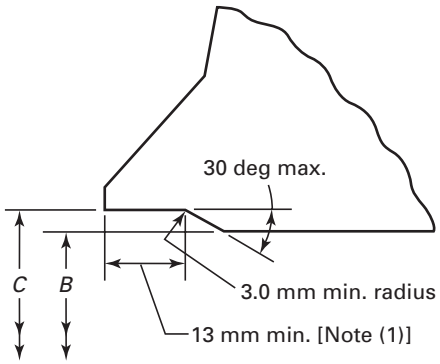

A = nominal outside diameter of welding end, mm
B = nominal inside diameter of pipe ($= A - 2t$), mm
C = $A - 0.79 - 1.75t - 0.25$, mm
t = nominal wall thickness of pipe, mm
0.79 mm = minus tolerance on outside diameter of pipe to ASTM A 106, etc.
$1.75t$ = $87\frac{1}{2}$% of nominal wall (permitted by ASTM A 106, etc.) multiplied by two to convert into terms of diameter
0.25 mm = plus tolerance on diameter C, mm. See para. 7.5.3.

GENERAL NOTES:
(a) Dimensions are in millimeters. For dimensions in inches, refer to Annex F, Fig. F10.
(b) See paras. 6.7, 6.8, and 7.5 for details and tolerances.
(c) See Figs. 8 and 9 for welding end details of welding neck flanges.
(d) For dimensions, see ASME B16.25.

NOTE:
(1) 13 mm depth based on use of 19-mm wide backing ring.

Fig. 10 Inside Contour for Use With Rectangular Backing Ring

WELDING ENDS
(Welding Neck Flanges)

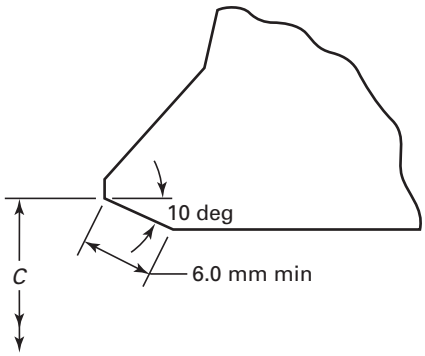

A = nominal outside diameter of welding end, mm
B = nominal inside diameter of pipe = $A - 2t$, mm
C = $A - 0.79 - 1.75t - 0.25$, mm
t = nominal wall thickness of pipe, mm
0.79 mm = minus tolerance on outside diameter of pipe to ASTM A 106, etc.
$1.75t$ = $87\frac{1}{2}$% of nominal wall (permitted by ASTM A 106, etc.) multiplied by two to convert into terms of diameter
0.25 mm = plus tolerance on diameter C, mm. See para. 7.5.3.

GENERAL NOTES:
(a) Dimensions are in millimeters. For dimensions in inches, refer to Annex F, Fig. F11.
(b) See paras. 6.7, 6.8, and 7.5 for details and tolerances.
(c) See Figs. 8 and 9 for welding end details of welding neck flanges.
(d) For dimensions, see ASME B16.25.

Fig. 11 Inside Contour for Use With Taper Backing Ring

Copyright ASME International
Provided by IHS under license with ASME
No reproduction or networking permitted without license from IHS Not for Resale

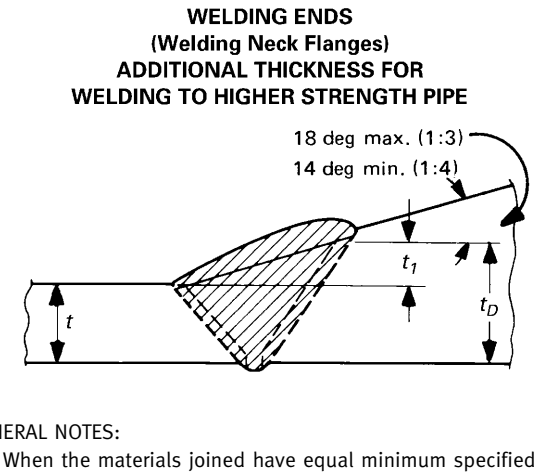

GENERAL NOTES:
(a) When the materials joined have equal minimum specified yield strength, there shall be no restriction on the minimum slope.
(b) Neither t_1, t_2, nor their sum $t_1 + t_2$ shall exceed $0.5t$.
(c) When the minimum specified yield strengths of the sections to be joined are unequal, the value of t_D shall at least equal the mating wall thickness times the ratio of minimum specified yield strength of the pipe to minimum specified yield strength of the flange.
(d) Welding shall be in accordance with the applicable code.

Fig. 12 Bevel for Outside Thickness

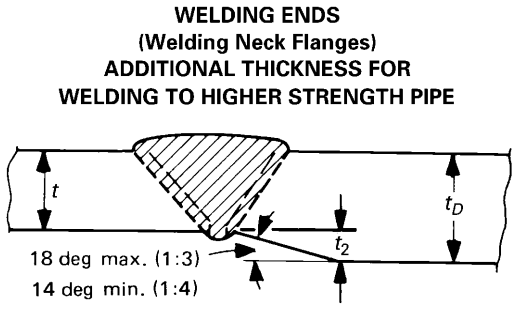

GENERAL NOTES:
(a) When the materials joined have equal minimum specified yield strength, there shall be no restriction on the minimum slope.
(b) Neither t_1, t_2, nor their sum $t_1 + t_2$ shall exceed $0.5t$.
(c) When the minimum specified yield strengths of the sections to be joined are unequal, the value of t_D shall at least equal the mating wall thickness times the ratio of minimum specified yield strength of the pipe to minimum specified yield strength of the flange.
(d) Welding shall be in accordance with the applicable code.

Fig. 13 Bevel for Inside Thickness

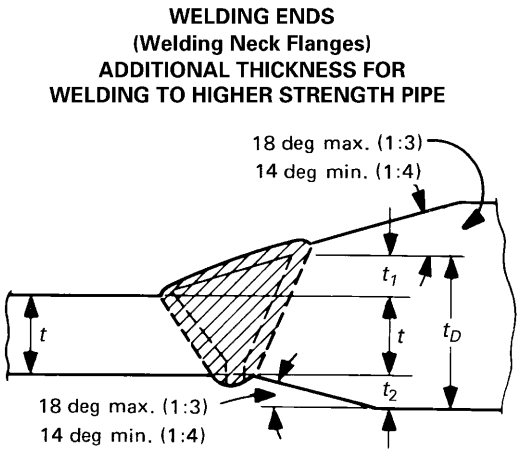

GENERAL NOTES:
(a) When the materials joined have equal minimum specified yield strength, there shall be no restriction on the minimum slope.
(b) Neither t_1, t_2, nor their sum $t_1 + t_2$ shall exceed $0.5t$.
(c) When the minimum specified yield strengths of the sections to be joined are unequal, the value of t_D shall at least equal the mating wall thickness times the ratio of minimum specified yield strength of the pipe to minimum specified yield strength of the flange.
(d) Welding shall be in accordance with the applicable code.

Fig. 14 Bevel for Combined Thickness

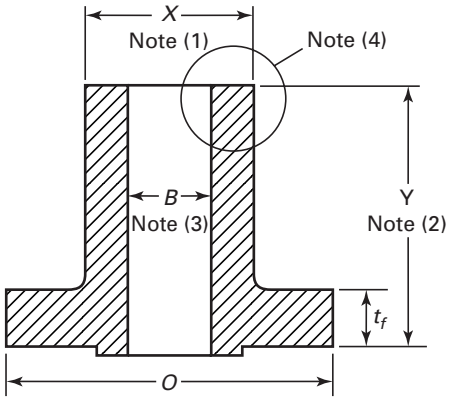

GENERAL NOTES:
(a) O = Outside diameter of flange. See para. 2.8.
(b) t_f = Minimum thickness of flange. See para. 2.8.

NOTES:
(1) X = Diameter of hub. See para. 2.8.
(2) Y = Length through hub. See para. 2.8.1.
(3) B = Bore. See para. 2.8.2.
(4) Hub end. See para. 2.8.3.

Fig. 15 Straight Hub Welding Flanges

Copyright ASME International
Provided by IHS under license with ASME
No reproduction or networking permitted without license from IHS
Not for Resale

Table 2-1.1 Pressure–Temperature Ratings for Group 1.1 Materials

Nominal Designation	Forgings	Castings	Plates
C–Si	A 105 (1)	A 216 Gr. WCB (1)	A 515 Gr. 70 (1)
C–Mn–Si	A 350 Gr. LF2 (1)		A 516 Gr. 70 (1), (2)
C–Mn–Si–V	A 350 Gr. LF6 Cl. (4)		
$3\frac{1}{2}$ Ni	A 350 Gr. LF3		A 537 Cl. 1 (3)

	Working Pressure by Classes, bar						
Class Temp., °C	150	300	400	600	900	1500	2500
–29 to 38	19.6	51.1	68.1	102.1	153.2	255.3	425.5
50	19.2	50.1	66.8	100.2	150.4	250.6	417.7
100	17.7	46.6	62.1	93.2	139.8	233.0	388.3
150	15.8	45.1	60.1	90.2	135.2	225.4	375.6
200	13.8	43.8	58.4	87.6	131.4	219.0	365.0
250	12.1	41.9	55.9	83.9	125.8	209.7	349.5
300	10.2	39.8	53.1	79.6	119.5	199.1	331.8
325	9.3	38.7	51.6	77.4	116.1	193.6	322.6
350	8.4	37.6	50.1	75.1	112.7	187.8	313.0
375	7.4	36.4	48.5	72.7	109.1	181.8	303.1
400	6.5	34.7	46.3	69.4	104.2	173.6	289.3
425	5.5	28.8	38.4	57.5	86.3	143.8	239.7
450	4.6	23.0	30.7	46.0	69.0	115.0	191.7
475	3.7	17.4	23.2	34.9	52.3	87.2	145.3
500	2.8	11.8	15.7	23.5	35.3	58.8	97.9
538	1.4	5.9	7.9	11.8	17.7	29.5	49.2

NOTES:

(1) Upon prolonged exposure to temperatures above 425°C, the carbide phase of steel may be converted to graphite. Permissible but not recommended for prolonged use above 425°C.

(2) Not to be used over 455°C.

(3) Not to be used over 370°C.

(4) Not to be used over 260°C.

Copyright ASME International
Provided by IHS under license with ASME
No reproduction or networking permitted without license from IHS
Not for Resale

Table 2-1.2 Pressure–Temperature Ratings for Group 1.2 Materials

Nominal Designation	Forgings	Castings	Plates
C–Mn–Si		A 216 Gr. WCC (1) A 352 Gr. LCC (2)	
C–Mn–Si–V	A 350 Gr. LF6 Cl.2 (3)		
$2\frac{1}{2}$Ni		A 352 Gr. LC2	A 203 Gr. B (1)
$3\frac{1}{2}$Ni		A 352 Gr. LC3	A 203 Gr. E (1)

	Working Pressure by Classes, bar						
Class Temp., °C	150	300	400	600	900	1500	2500
–29 to 38	19.8	51.7	68.9	103.4	155.1	258.6	430.9
50	19.5	51.7	68.9	103.4	155.1	258.6	430.9
100	17.7	51.5	68.7	103.0	154.6	257.6	429.4
150	15.8	50.2	66.8	100.3	150.5	250.8	418.1
200	13.8	48.6	64.8	97.2	145.8	243.2	405.4
250	12.1	46.3	61.7	92.7	139.0	231.8	386.2
300	10.2	42.9	57.0	85.7	128.6	214.4	357.1
325	9.3	41.4	55.0	82.6	124.0	206.6	344.3
350	8.4	40.0	53.4	80.0	120.1	200.1	333.5
375	7.4	37.8	50.4	75.7	113.5	189.2	315.3
400	6.5	34.7	46.3	69.4	104.2	173.6	289.3
425	5.5	28.8	38.4	57.5	86.3	143.8	239.7
450	4.6	23.0	30.7	46.0	69.0	115.0	191.7
475	3.7	17.1	22.8	34.2	51.3	85.4	142.4
500	2.8	11.6	15.4	23.2	34.7	57.9	96.5
538	1.4	5.9	7.9	11.8	17.7	29.5	49.2

NOTES:

(1) Upon prolonged exposure to temperatures above 425°C, the carbide phase of steel may be converted to graphite. Permissible, but not recommended for prolonged use above 425°C.

(2) Not to be used over 340°C.

(3) Not to be used over 260°C.

Copyright ASME International
Provided by IHS under license with ASME
No reproduction or networking permitted without license from IHS Not for Resale

Table 2-1.3 Pressure–Temperature Ratings for Group 1.3 Materials

Nominal Designation	Forgings	Castings	Plates
C–Si		A 352 LCB (3)	A 515 Gr. 65 (1)
C–Mn–Si			A 516 Gr. 65 (1), (2)
C–$\frac{1}{2}$Mo		A 217 Gr. WC1 (4), (5) A 352 Gr. LC1 (3)	
$2\frac{1}{2}$Ni			A 203 Gr. A (1)
$3\frac{1}{2}$Ni			A 203 Gr. D (1)

Working Pressures by Classes, bar							
Class Temp., °C	150	300	400	600	900	1500	2500
–29 to 38	18.4	48.0	64.0	96.0	144.1	240.1	400.1
50	18.2	47.5	63.3	94.9	142.4	237.3	395.6
100	17.4	45.3	60.5	90.7	136.0	226.7	377.8
150	15.8	43.9	58.6	87.9	131.8	219.7	366.1
200	13.8	42.5	56.7	85.1	127.6	212.7	354.4
250	12.1	40.8	54.4	81.6	122.3	203.9	339.8
300	10.2	38.7	51.6	77.4	116.1	193.4	322.4
325	9.3	37.6	50.1	75.2	112.7	187.9	313.1
350	8.4	36.4	48.5	72.8	109.2	182.0	303.3
375	7.4	35.0	46.6	69.9	104.9	174.9	291.4
400	6.5	32.6	43.5	65.2	97.9	163.1	271.9
425	5.5	27.3	36.4	54.6	81.9	136.5	227.5
450	4.6	21.6	28.8	43.2	64.8	107.9	179.9
475	3.7	15.7	20.9	31.3	47.0	78.3	130.6
500	2.8	11.1	14.8	22.1	33.2	55.4	92.3
538	1.4	5.9	7.9	11.8	17.7	29.5	49.2

NOTES:

(1) Upon prolonged exposure to temperatures above 425°C, the carbide phase of steel may be converted to graphite. Permissible, but not recommended for prolonged use above 425°C.

(2) Not to be used over 455°C.

(3) Not to be used over 340°C.

(4) Upon prolonged exposure to temperatures above 465°C, the carbide phase of steel may be converted to graphite. Permissible, but not recommended for prolonged use above 465°C.

(5) Use normalized and tempered material only.

Copyright ASME International
Provided by IHS under license with ASME
No reproduction or networking permitted without license from IHS Not for Resale

Table 2-1.4 Pressure–Temperature Ratings for Group 1.4 Materials

Nominal Designation	Forgings	Castings	Plates
C–Si			A 515 Gr. 60 (1)
C–Mn–Si	A 350 Gr. LF1, Cl. 1 (1)		A 516 Gr. 60 (1), (2)

	Working Pressures by Classes, bar						
Class Temp., °C	150	300	400	600	900	1500	2500
–29 to 38	16.3	42.6	56.7	85.1	127.7	212.8	354.6
50	16.0	41.8	55.7	83.5	125.3	208.9	348.1
100	14.9	38.8	51.8	77.7	116.5	194.2	323.6
150	14.4	37.6	50.1	75.1	112.7	187.8	313.0
200	13.8	36.4	48.5	72.8	109.2	182.1	303.4
250	12.1	34.9	46.6	69.8	104.7	174.6	291.0
300	10.2	33.2	44.2	66.4	99.5	165.9	276.5
325	9.3	32.2	43.0	64.5	96.7	161.2	268.6
350	8.4	31.2	41.7	62.5	93.7	156.2	260.4
375	7.4	30.4	40.5	60.7	91.1	151.8	253.0
400	6.5	29.3	39.1	58.7	88.0	146.7	244.5
425	5.5	25.8	34.4	51.5	77.3	128.8	214.7
450	4.6	21.4	28.5	42.7	64.1	106.8	178.0
475	3.7	14.1	18.8	28.2	42.3	70.5	117.4
500	2.8	10.3	13.7	20.6	30.9	51.5	85.9
538	1.4	5.9	7.9	11.8	17.7	29.5	49.2

NOTES:

(1) Upon prolonged exposure to temperatures above 425°C, the carbide phase of steel may be converted to graphite. Permissible, but not recommended for prolonged use above 425°C.

(2) Not to be used over 455°C.

--`,,```,,,,````-`-`,,`,,`,`,,`---

Copyright ASME International
Provided by IHS under license with ASME
No reproduction or networking permitted without license from IHS Not for Resale

Table 2-1.5 Pressure–Temperature Ratings for Group 1.5 Materials

Nominal Designation	Forgings	Castings	Plates
C–½Mo	A 182 Gr. F1 (1)		A 204 Gr. A (1) A 204 Gr. B (1)

	Working Pressures by Classes, bar						
Class Temp., °C	150	300	400	600	900	1500	2500
–29 to 38	18.4	48.0	64.0	96.0	144.1	240.1	400.1
50	18.4	48.0	64.0	96.0	144.1	240.1	400.1
100	17.7	47.9	63.9	95.9	143.8	239.7	399.5
150	15.8	47.3	63.1	94.7	142.0	236.7	394.5
200	13.8	45.8	61.1	91.6	137.4	229.0	381.7
250	12.1	44.5	59.3	89.0	133.5	222.5	370.9
300	10.2	42.9	57.0	85.7	128.6	214.4	357.1
325	9.3	41.4	55.0	82.6	124.0	206.6	344.3
350	8.4	40.3	53.6	80.4	120.7	201.1	335.3
375	7.4	38.9	51.6	77.6	116.5	194.1	323.2
400	6.5	36.5	48.9	73.3	109.8	183.1	304.9
425	5.5	35.2	46.5	70.0	105.1	175.1	291.6
450	4.6	33.7	45.1	67.7	101.4	169.0	281.8
475	3.7	31.7	42.3	63.4	95.1	158.2	263.9
500	2.8	24.1	32.1	48.1	72.2	120.3	200.5
538	1.4	11.3	15.1	22.7	34.0	56.7	94.6

NOTE:

(1) Upon prolonged exposure to temperatures above 465°C, the carbide phase of carbon-molybdenum steel may be converted to graphite. Permissible, but not recommended for prolonged use above 465°C.

Copyright ASME International
Provided by IHS under license with ASME
No reproduction or networking permitted without license from IHS
Not for Resale

Table 2-1.7 Pressure–Temperature Ratings for Group 1.7 Materials

Nominal Designation	Forgings	Castings	Plates
1/2Cr–1/2Mo	A 182 Gr. F2 (2)		
Ni–1/2Cr–1/2Mo		A 217 Gr. WC4 (1), (2)	
3/4Ni–3/4Cr–1Mo		A 217 Gr. WC5 (1)	

	Working Pressures By Classes, bar						
Class Temp., °C	150	300	400	600	900	1500	2500
–29 to 38	19.8	51.7	68.9	103.4	155.1	258.6	430.9
50	19.5	51.7	68.9	103.4	155.1	258.6	430.9
100	17.7	51.5	68.7	103.0	154.6	257.6	429.4
150	15.8	50.3	66.8	100.3	150.6	250.8	418.2
200	13.8	48.6	64.8	97.2	145.8	243.4	405.4
250	12.1	46.3	61.7	92.7	139.0	231.8	386.2
300	10.2	42.9	57.0	85.7	128.6	214.4	357.1
325	9.3	41.4	55.0	82.6	124.0	206.6	344.3
350	8.4	40.3	53.6	80.4	120.7	201.1	335.3
375	7.4	38.9	51.6	77.6	116.5	194.1	323.2
400	6.5	36.5	48.9	73.3	109.8	183.1	304.9
425	5.5	35.2	46.5	70.0	105.1	175.1	291.6
450	4.6	33.7	45.1	67.7	101.4	169.0	281.8
475	3.7	31.7	42.3	63.4	95.1	158.2	263.9
500	2.8	26.7	35.6	53.4	80.1	133.4	222.4
538	1.4	13.9	18.6	27.9	41.8	69.7	116.2
550	. . .	12.6	16.8	25.2	37.8	63.0	105.0
575	. . .	7.2	9.6	14.4	21.5	35.9	59.8

NOTES:
(1) Use normalized and tempered material only.
(2) Not to be used over 538°C.

Copyright ASME International
Provided by IHS under license with ASME
No reproduction or networking permitted without license from IHS
Not for Resale

Table 2-1.9 Pressure–Temperature Ratings for Group 1.9 Materials

Nominal Designation	Forgings	Castings	Plates
$1\frac{1}{4}$Cr–$\frac{1}{2}$Mo		A 217 Gr. WC6 (1), (3)	
$1\frac{1}{4}$Cr–$\frac{1}{2}$Mo–Si	A 182 Gr. F11 Cl. 2 (1), (2)		A 387 Gr. 11 Cl. 2 (2)

	Working Pressures by Classes, bar						
Class Temp., °C	150	300	400	600	900	1500	2500
–29 to 38	19.8	51.7	68.9	103.4	155.1	258.6	430.9
50	19.5	51.7	68.9	103.4	155.1	258.6	430.9
100	17.7	51.5	68.6	103.0	154.4	257.4	429.0
150	15.8	49.7	66.3	99.5	149.2	248.7	414.5
200	13.8	48.0	63.9	95.9	143.9	239.8	399.6
250	12.1	46.3	61.7	92.7	139.0	231.8	386.2
300	10.2	42.9	57.0	85.7	128.6	214.4	357.1
325	9.3	41.4	55.0	82.6	124.0	206.6	344.3
350	8.4	40.3	53.6	80.4	120.7	201.1	335.3
375	7.4	38.9	51.6	77.6	116.5	194.1	323.2
400	6.5	36.5	48.9	73.3	109.8	183.1	304.9
425	5.5	35.2	46.5	70.0	105.1	175.1	291.6
450	4.6	33.7	45.1	67.7	101.4	169.0	281.8
475	3.7	31.7	42.3	63.4	95.1	158.2	263.9
500	2.8	25.7	34.3	51.5	77.2	128.6	214.4
538	1.4	14.9	19.9	29.8	44.7	74.5	124.1
550	...	12.7	16.9	25.4	38.1	63.5	105.9
575	...	8.8	11.7	17.6	26.4	44.0	73.4
600	...	6.1	8.1	12.2	18.3	30.5	50.9
625	...	4.3	5.7	8.5	12.8	21.3	35.5
650	...	2.8	3.8	5.7	8.5	14.2	23.6

NOTES:
(1) Use normalized and tempered material only.
(2) Permissible, but not recommended for prolonged use above 590°C.
(3) Not to be used over 590°C.

Copyright ASME International
Provided by IHS under license with ASME
No reproduction or networking permitted without license from IHS
Not for Resale

Table 2-1.10 Pressure–Temperature Ratings for Group 1.10 Materials

Nominal Designation	Forgings		Castings		Plates	
$2\frac{1}{4}$Cr–1Mo	A 182 Gr. F22 Cl. 3 (2)		A 217 Gr. WC9 (1), (3)		A 387 Gr. 22 Cl. 2 (2)	
	Working Pressures by Classes, bar					
Class Temp., °C	150	300	400	600	900	1500	2500
–29 to 38	19.8	51.7	68.9	103.4	155.1	258.6	430.9
50	19.5	51.7	68.9	103.4	155.1	258.6	430.9
100	17.7	51.5	68.7	103.0	154.6	257.6	429.4
150	15.8	50.3	66.8	100.3	150.6	250.8	418.2
200	13.8	48.6	64.8	97.2	145.8	243.4	405.4
250	12.1	46.3	61.7	92.7	139.0	231.8	386.2
300	10.2	42.9	57.0	85.7	128.6	214.4	357.1
325	9.3	41.4	55.0	82.6	124.0	206.6	344.3
350	8.4	40.3	53.6	80.4	120.7	201.1	335.3
375	7.4	38.9	51.6	77.6	116.5	194.1	323.2
400	6.5	36.5	48.9	73.3	109.8	183.1	304.9
425	5.5	35.2	46.5	70.0	105.1	175.1	291.6
450	4.6	33.7	45.1	67.7	101.4	169.0	281.8
475	3.7	31.7	42.3	63.4	95.1	158.2	263.9
500	2.8	28.2	37.6	56.5	84.7	140.9	235.0
538	1.4	18.4	24.6	36.9	55.3	92.2	153.7
550	. . .	15.6	20.8	31.3	46.9	78.2	130.3
575	. . .	10.5	14.0	21.1	31.6	52.6	87.7
600	. . .	6.9	9.2	13.8	20.7	34.4	57.4
625	. . .	4.5	6.0	8.9	13.4	22.3	37.2
650	. . .	2.8	3.8	5.7	8.5	14.2	23.6

NOTES:
(1) Use normalized and tempered material only.
(2) Permissible, but not recommended for prolonged use above 590°C.
(3) Not to be used over 590°C.

Copyright ASME International
Provided by IHS under license with ASME
No reproduction or networking permitted without license from IHS Not for Resale

Table 2-1.11 Pressure–Temperature Ratings for Group 1.11 Materials

Nominal Designation		Forgings		Castings			Plates
C–½Mo							A 204, Gr. C (1)
				Working Pressures by Classes, bar			
Class Temp., °C	150	300	400	600	900	1500	2500
–29 to 38	20.0	51.7	68.9	103.4	155.1	258.6	430.9
50	19.5	51.7	68.9	103.4	155.1	258.6	430.9
100	17.7	51.5	68.7	103.0	154.6	257.6	429.4
150	15.8	50.3	66.8	100.3	150.6	250.8	418.2
200	13.8	48.6	64.8	97.2	145.8	243.4	405.4
250	12.1	46.3	61.7	92.7	139.0	231.8	386.2
300	10.2	42.9	57.0	85.7	128.6	214.4	357.1
325	9.3	41.4	55.0	82.6	124.0	206.6	344.3
350	8.4	40.3	53.6	80.4	120.7	201.1	335.3
375	7.4	38.9	51.6	77.6	116.5	194.1	323.2
400	6.5	36.5	48.9	73.3	109.8	183.1	304.9
425	5.5	35.2	46.5	70.0	105.1	175.1	291.6
450	4.6	33.7	45.1	67.7	101.4	169.0	281.8
475	3.7	31.7	42.3	63.4	95.1	158.2	263.9
500	2.8	23.6	31.4	47.1	70.7	117.8	196.3
538	1.4	11.3	15.3	22.7	34.4	56.7	94.6
550	...	11.3	15.3	22.7	34.4	56.7	94.6
575	...	10.1	13.6	20.1	30.2	50.3	83.8
600	...	7.1	9.5	14.2	21.3	35.6	59.3
625	...	5.3	7.1	10.6	15.9	26.5	44.2
650	...	3.1	4.1	6.1	9.2	15.4	25.6

NOTE:

(1) Upon prolonged exposure to temperatures above 465°C, the carbide phase of carbon–molybdenum steel may be converted to graphite. Permissible, but not recommended for prolonged use above 465°C.

Copyright ASME International
Provided by IHS under license with ASME
No reproduction or networking permitted without license from IHS Not for Resale

Table 2-1.13 Pressure–Temperature Ratings for Group 1.13 Materials

Nominal Designation	Forgings		Castings			Plates
5Cr–½Mo	A 182 Gr. F5a		A 217 Gr. C5 (1)			
	Working Pressures by Classes, bar					
Class Temp., °C	150	300	400	600	900	1500	2500
–29 to 38	20.0	51.7	68.9	103.4	155.1	258.6	430.9
50	19.5	51.7	68.9	103.4	155.1	258.6	430.9
100	17.7	51.5	68.7	103.0	154.6	257.6	429.4
150	15.8	50.3	66.8	100.3	150.6	250.8	418.2
200	13.8	48.6	64.8	97.2	145.8	243.4	405.4
250	12.1	46.3	61.7	92.7	139.0	231.8	386.2
300	10.2	42.9	57.0	85.7	128.6	214.4	357.1
325	9.3	41.4	55.0	82.6	124.0	206.6	344.3
350	8.4	40.3	53.6	80.4	120.7	201.1	335.3
375	7.4	38.9	51.6	77.6	116.5	194.1	323.2
400	6.5	36.5	48.9	73.3	109.8	183.1	304.9
425	5.5	35.2	46.5	70.0	105.1	175.1	291.6
450	4.6	33.7	45.1	67.7	101.4	169.0	281.8
475	3.7	27.9	37.1	55.7	83.6	139.3	232.1
500	2.8	21.4	28.5	42.8	64.1	106.9	178.2
538	1.4	13.7	18.3	27.4	41.1	68.6	114.3
550	...	12.0	16.1	24.1	36.1	60.2	100.4
575	...	8.9	11.8	17.8	26.7	44.4	74.0
600	...	6.2	8.3	12.5	18.7	31.2	51.9
625	...	4.0	5.3	8.0	12.0	20.0	33.3
650	...	2.4	3.2	4.7	7.1	11.8	19.7

NOTE:
(1) Use normalized and tempered material only.

Copyright ASME International
Provided by IHS under license with ASME
No reproduction or networking permitted without license from IHS Not for Resale

Table 2-1.14 Pressure–Temperature Ratings for Group 1.14 Materials

Nominal Designation	Forgings	Castings	Plates
9Cr–1Mo	A 182 Gr. F9	A 217 Gr. C12 (1)	

Working Pressures by Classes, bar							
Class Temp., °C	150	300	400	600	900	1500	2500
–29 to 38	20.0	51.7	68.9	103.4	155.1	258.6	430.9
50	19.5	51.7	68.9	103.4	155.1	258.6	430.9
100	17.7	51.5	68.7	103.0	154.6	257.6	429.4
150	15.8	50.3	66.8	100.3	150.6	250.8	418.2
200	13.8	48.6	64.8	97.2	145.8	243.4	405.4
250	12.1	46.3	61.7	92.7	139.0	231.8	386.2
300	10.2	42.9	57.0	85.7	128.6	214.4	357.1
325	9.3	41.4	55.0	82.6	124.0	206.6	344.3
350	8.4	40.3	53.6	80.4	120.7	201.1	335.3
375	7.4	38.9	51.6	77.6	116.5	194.1	323.2
400	6.5	36.5	48.9	73.3	109.8	183.1	304.9
425	5.5	35.2	46.5	70.0	105.1	175.1	291.6
450	4.6	33.7	45.1	67.7	101.4	169.0	281.8
475	3.7	31.7	42.3	63.4	95.1	158.2	263.9
500	2.8	28.2	37.6	56.5	84.7	140.9	235.0
538	1.4	17.5	23.3	35.0	52.5	87.5	145.8
550	. . .	15.0	20.0	30.0	45.0	75.0	125.0
575	. . .	10.5	13.9	20.9	31.4	52.3	87.1
600	. . .	7.2	9.6	14.4	21.5	35.9	59.8
625	. . .	5.0	6.6	9.9	14.9	24.8	41.4
650	. . .	3.5	4.7	7.1	10.6	17.7	29.5

NOTE:
(1) Use normalized and tempered material only.

--`,,```,,,,````-`-`,,`,,`,`,,`---
Copyright ASME International
Provided by IHS under license with ASME
No reproduction or networking permitted without license from IHS
Not for Resale

Table 2-1.15 Pressure–Temperature Ratings for Group 1.15 Materials

Nominal Designation	Forgings	Castings	Plates
9Cr–1Mo–V	A 182 Gr. F91	A 217 Gr. C12A	A 387 Gr. 91 Cl. 2

	Working Pressures by Classes, bar						
Class Temp., °C	150	300	400	600	900	1500	2500
−29 to 38	20.0	51.7	68.9	103.4	155.1	258.6	430.9
50	19.5	51.7	68.9	103.4	155.1	258.6	430.9
100	17.7	51.5	68.7	103.0	154.6	257.6	429.4
150	15.8	50.3	66.8	100.3	150.6	250.8	418.2
200	13.8	48.6	64.8	97.2	145.8	243.4	405.4
250	12.1	46.3	61.7	92.7	139.0	231.8	386.2
300	10.2	42.9	57.0	85.7	128.6	214.4	357.1
325	9.3	41.4	55.0	82.6	124.0	206.6	344.3
350	8.4	40.3	53.6	80.4	120.7	201.1	335.3
375	7.4	38.9	51.6	77.6	116.5	194.1	323.2
400	6.5	36.5	48.9	73.3	109.8	183.1	304.9
425	5.5	35.2	46.5	70.0	105.1	175.1	291.6
450	4.6	33.7	45.1	67.7	101.4	169.0	281.8
475	3.7	31.7	42.3	63.4	95.1	158.2	263.9
500	2.8	28.2	37.6	56.5	84.7	140.9	235.0
538	1.4	25.2	33.4	50.0	75.2	125.5	208.9
550	...	25.0	33.3	49.8	74.8	124.9	208.0
575	...	24.0	31.9	47.9	71.8	119.7	199.5
600	...	19.5	26.0	39.0	58.5	97.5	162.5
625	...	14.6	19.5	29.2	43.8	73.0	121.7
650	...	9.9	13.2	19.9	29.8	49.6	82.7

Copyright ASME International
Provided by IHS under license with ASME
No reproduction or networking permitted without license from IHS
Not for Resale

Table 2-1.17 Pressure–Temperature Ratings for Group 1.17 Materials

Nominal Designation	Forgings	Castings	Plates
1Cr–½Mo	A 182 Gr. F12 Cl. 2 (1), (2)		
5Cr–½Mo	A 182 Gr. F5		

	Working Pressures by Classes, bar						
Class Temp., °C	150	300	400	600	900	1500	2500
−29 to 38	19.8	51.7	68.9	103.4	155.1	258.6	430.9
50	19.5	51.5	68.7	103.0	154.5	257.5	429.2
100	17.7	50.4	67.3	100.9	151.3	252.2	420.4
150	15.8	48.2	64.2	96.4	144.5	240.9	401.5
200	13.8	46.3	61.7	92.5	138.8	231.3	385.6
250	12.1	44.8	59.8	89.6	134.5	224.1	373.5
300	10.2	42.9	57.0	85.7	128.6	214.4	357.1
325	9.3	41.4	55.0	82.6	124.0	206.6	344.3
350	8.4	40.3	53.6	80.4	120.7	201.1	335.3
375	7.4	38.9	51.6	77.6	116.5	194.1	323.2
400	6.5	36.5	48.9	73.3	109.8	183.1	304.9
425	5.5	35.2	46.5	70.0	105.1	175.1	291.6
450	4.6	33.7	45.1	67.7	101.4	169.0	281.8
475	3.7	27.9	37.1	55.7	83.6	139.3	232.1
500	2.8	21.4	28.5	42.8	64.1	106.9	178.2
538	1.4	13.7	18.3	27.4	41.1	68.6	114.3
550	...	12.0	16.1	24.1	36.1	60.2	100.4
575	...	8.8	11.7	17.6	26.4	44.0	73.4
600	...	6.1	8.1	12.1	18.2	30.3	50.4
625	...	4.0	5.3	8.0	12.0	20.0	33.3
650	...	2.4	3.2	4.7	7.1	11.8	19.7

NOTES:
(1) Use normalized and tempered material only.
(2) Permissible, but not recommended for prolonged use above 590°C.

Copyright ASME International
Provided by IHS under license with ASME
No reproduction or networking permitted without license from IHS
Not for Resale

Table 2-2.1 Pressure–Temperature Ratings for Group 2.1 Materials

Nominal Designation	Forgings	Castings	Plates
18Cr–8Ni	A 182 Gr. F304 (1)	A 351 Gr. CF3 (2)	A 240 Gr. 304 (1)
	A 182 Gr. F304H	A 351 Gr. CF8 (1)	A 240 Gr. 304H

	Working Pressures by Classes, bar						
Class Temp., °C	150	300	400	600	900	1500	2500
–29 to 38	19.0	49.6	66.2	99.3	148.9	248.2	413.7
50	18.3	47.8	63.8	95.6	143.5	239.1	398.5
100	15.7	40.9	54.5	81.7	122.6	204.3	340.4
150	14.2	37.0	49.3	74.0	111.0	185.0	308.4
200	13.2	34.5	46.0	69.0	103.4	172.4	287.3
250	12.1	32.5	43.3	65.0	97.5	162.4	270.7
300	10.2	30.9	41.2	61.8	92.7	154.6	257.6
325	9.3	30.2	40.3	60.4	90.7	151.1	251.9
350	8.4	29.6	39.5	59.3	88.9	148.1	246.9
375	7.4	29.0	38.7	58.1	87.1	145.2	241.9
400	6.5	28.4	37.9	56.9	85.3	142.2	237.0
425	5.5	28.0	37.3	56.0	84.0	140.0	233.3
450	4.6	27.4	36.5	54.8	82.2	137.0	228.4
475	3.7	26.9	35.9	53.9	80.8	134.7	224.5
500	2.8	26.5	35.3	53.0	79.5	132.4	220.7
538	1.4	24.4	32.6	48.9	73.3	122.1	203.6
550	. . .	23.6	31.4	47.1	70.7	117.8	196.3
575	. . .	20.8	27.8	41.7	62.5	104.2	173.7
600	. . .	16.9	22.5	33.8	50.6	84.4	140.7
625	. . .	13.8	18.4	27.6	41.4	68.9	114.9
650	. . .	11.3	15.0	22.5	33.8	56.3	93.8
675	. . .	9.3	12.5	18.7	28.0	46.7	77.9
700	. . .	8.0	10.7	16.1	24.1	40.1	66.9
725	. . .	6.8	9.0	13.5	20.3	33.8	56.3
750	. . .	5.8	7.7	11.6	17.3	28.9	48.1
775	. . .	4.6	6.2	9.0	13.7	22.8	38.0
800	. . .	3.5	4.8	7.0	10.5	17.4	29.2
816	. . .	2.8	3.8	5.9	8.6	14.1	23.8

NOTES:
(1) At temperatures over 538°C, use only when the carbon content is 0.04% or higher.
(2) Not to be used over 425°C.

Copyright ASME International
Provided by IHS under license with ASME
No reproduction or networking permitted without license from IHS Not for Resale

Table 2-2.2 Pressure–Temperature Ratings for Group 2.2 Materials

Nominal Designation	Forgings	Castings	Plates
16Cr–12Ni–2Mo	A 182 Gr. F316 (1) A 182 Gr. F316H	A 351 Gr. CF3M (2) A 351 Gr. CF8M (1)	A 240 Gr. 316 (1) A 240 Gr. 316H
18Cr–13Ni–3Mo	A182Gr. F317 (1)		A 240 Gr. 317 (1)
19Cr–10Ni–3Mo		A 351 Gr. CG8M (3)	

Working Pressures by Classes, bar							
Class Temp., °C	150	300	400	600	900	1500	2500
–29 to 38	19.0	49.6	66.2	99.3	148.9	248.2	413.7
50	18.4	48.1	64.2	96.2	144.3	240.6	400.9
100	16.2	42.2	56.3	84.4	126.6	211.0	351.6
150	14.8	38.5	51.3	77.0	115.5	192.5	320.8
200	13.7	35.7	47.6	71.3	107.0	178.3	297.2
250	12.1	33.4	44.5	66.8	100.1	166.9	278.1
300	10.2	31.6	42.2	63.2	94.9	158.1	263.5
325	9.3	30.9	41.2	61.8	92.7	154.4	257.4
350	8.4	30.3	40.4	60.7	91.0	151.6	252.7
375	7.4	29.9	39.8	59.8	89.6	149.4	249.0
400	6.5	29.4	39.3	58.9	88.3	147.2	245.3
425	5.5	29.1	38.9	58.3	87.4	145.7	242.9
450	4.6	28.8	38.5	57.7	86.5	144.2	240.4
475	3.7	28.7	38.2	57.3	86.0	143.4	238.9
500	2.8	28.2	37.6	56.5	84.7	140.9	235.0
538	1.4	25.2	33.4	50.0	75.2	125.5	208.9
550	...	25.0	33.3	49.8	74.8	124.9	208.0
575	...	24.0	31.9	47.9	71.8	119.7	199.5
600	...	19.9	26.5	39.8	59.7	99.5	165.9
625	...	15.8	21.1	31.6	47.4	79.1	131.8
650	...	12.7	16.9	25.3	38.0	63.3	105.5
675	...	10.3	13.8	20.6	31.0	51.6	86.0
700	...	8.4	11.2	16.8	25.1	41.9	69.8
725	...	7.0	9.3	14.0	21.0	34.9	58.2
750	...	5.9	7.8	11.7	17.6	29.3	48.9
775	...	4.6	6.2	9.0	13.7	22.8	38.0
800	...	3.5	4.8	7.0	10.5	17.4	29.2
816	...	2.8	3.8	5.9	8.6	14.1	23.8

NOTES:
(1) At temperatures over 538°C, use only when the carbon content is 0.04% or higher.
(2) Not to be used over 455°C.
(3) Not to be used over 538°C.

Copyright ASME International
Provided by IHS under license with ASME
No reproduction or networking permitted without license from IHS
Not for Resale

Table 2-2.3 Pressure–Temperature Ratings for Group 2.3 Materials

Nominal Designation	Forgings	Castings	Plates
16Cr–12Ni–2Mo	A 182 Gr. F316L		A 240 Gr. 316L
18Cr–8Ni	A 182 Gr. F304L (1)		A 240 Gr. 304L (1)

	Working Pressures by Classes, bar						
Class Temp., °C	150	300	400	600	900	1500	2500
–29 to 38	15.9	41.4	55.2	82.7	124.1	206.8	344.7
50	15.3	40.0	53.4	80.0	120.1	200.1	333.5
100	13.3	34.8	46.4	69.6	104.4	173.9	289.9
150	12.0	31.4	41.9	62.8	94.2	157.0	261.6
200	11.2	29.2	38.9	58.3	87.5	145.8	243.0
250	10.5	27.5	36.6	54.9	82.4	137.3	228.9
300	10.0	26.1	34.8	52.1	78.2	130.3	217.2
325	9.3	25.5	34.0	51.0	76.4	127.4	212.3
350	8.4	25.1	33.4	50.1	75.2	125.4	208.9
375	7.4	24.8	33.0	49.5	74.3	123.8	206.3
400	6.5	24.3	32.4	48.6	72.9	121.5	202.5
425	5.5	23.9	31.8	47.7	71.6	119.3	198.8
450	4.6	23.4	31.2	46.8	70.2	117.1	195.1

NOTE:
(1) Not to be used over 425°C.

Copyright ASME International
Provided by IHS under license with ASME
No reproduction or networking permitted without license from IHS Not for Resale

Table 2-2.4 Pressure–Temperature Ratings for Group 2.4 Materials

Nominal Designation	Forgings	Castings	Plates
18Cr–10Ni–Ti	A 182 Gr. F321 (1) A 182 Gr. F321H (2)		A 240 Gr. 321 (1) A 240 Gr. 321H (2)

	Working Pressures by Classes, bar						
Class Temp., °C	150	300	400	600	900	1500	2500
−29 to 38	19.0	49.6	66.2	99.3	148.9	248.2	413.7
50	18.6	48.6	64.7	97.1	145.7	242.8	404.6
100	17.0	44.2	59.0	88.5	132.7	221.2	368.7
150	15.7	41.0	54.6	82.0	122.9	204.9	341.5
200	13.8	38.3	51.1	76.6	114.9	191.5	319.1
250	12.1	36.0	48.0	72.0	108.1	180.1	300.2
300	10.2	34.1	45.5	68.3	102.4	170.7	284.6
325	9.3	33.3	44.4	66.6	99.9	166.5	277.6
350	8.4	32.6	43.5	65.2	97.8	163.0	271.7
375	7.4	32.0	42.7	64.1	96.1	160.2	266.9
400	6.5	31.6	42.1	63.2	94.8	157.9	263.2
425	5.5	31.1	41.5	62.3	93.4	155.7	259.5
450	4.6	30.8	41.1	61.7	92.5	154.2	256.9
475	3.7	30.5	40.7	61.1	91.6	152.7	254.4
500	2.8	28.2	37.6	56.5	84.7	140.9	235.0
538	1.4	25.2	33.4	50.0	75.2	125.5	208.9
550	...	25.0	33.3	49.8	74.8	124.9	208.0
575	...	24.0	31.9	47.9	71.8	119.7	199.5
600	...	20.3	27.0	40.5	60.8	101.3	168.9
625	...	15.8	21.1	31.6	47.4	79.1	131.8
650	...	12.6	16.9	25.3	37.9	63.2	105.4
675	...	9.9	13.2	19.8	29.6	49.4	82.3
700	...	7.9	10.5	15.8	23.7	39.5	65.9
725	...	6.3	8.5	12.7	19.0	31.7	52.8
750	...	5.0	6.7	10.0	15.0	25.0	41.7
775	...	4.0	5.3	8.0	11.9	19.9	33.2
800	...	3.1	4.2	6.3	9.4	15.6	26.1
816	...	2.6	3.5	5.2	7.8	13.0	21.7

NOTES:

(1) Not to be used over 538°C.

(2) At temperatures over 538°C, use only if the material is heat treated by heating to a minimum temperature of 1095°C.

Copyright ASME International
Provided by IHS under license with ASME
No reproduction or networking permitted without license from IHS
Not for Resale

Table 2-2.5 Pressure–Temperature Ratings for Group 2.5 Materials

Nominal Designation	Forgings	Castings	Plates
18Cr–10Ni–Cb	A 182 Gr. F347 (1) A 182 Gr. F347H (2) A 182 Gr. F348 (1) A 182 Gr. F348H (2)		A 240 Gr. 347 (1) A 240 Gr. 347H (2) A 240 Gr. 348 (1) A 240 Gr. 348H (2)

	Working Pressures by Classes, bar						
Class Temp., °C	150	300	400	600	900	1500	2500
−29 to 38	19.0	49.6	66.2	99.3	148.9	248.2	413.7
50	18.7	48.8	65.0	97.5	146.3	243.8	406.4
100	17.4	45.3	60.4	90.6	135.9	226.5	377.4
150	15.8	42.5	56.6	84.9	127.4	212.4	353.9
200	13.8	39.9	53.3	79.9	119.8	199.7	332.8
250	12.1	37.8	50.4	75.6	113.4	189.1	315.1
300	10.2	36.1	48.1	72.2	108.3	180.4	300.7
325	9.3	35.4	47.1	70.7	106.1	176.8	294.6
350	8.4	34.8	46.3	69.5	104.3	173.8	289.6
375	7.4	34.2	45.6	68.4	102.6	171.0	285.1
400	6.5	33.9	45.2	67.8	101.7	169.5	282.6
425	5.5	33.6	44.8	67.2	100.8	168.1	280.1
450	4.6	33.5	44.6	66.9	100.4	167.3	278.8
475	3.7	31.7	42.3	63.4	95.1	158.2	263.9
500	2.8	28.2	37.6	56.5	84.7	140.9	235.0
538	1.4	25.2	33.4	50.0	75.2	125.5	208.9
550	. . .	25.0	33.3	49.8	74.8	124.9	208.0
575	. . .	24.0	31.9	47.9	71.8	119.7	199.5
600	. . .	21.6	28.6	42.9	64.2	107.0	178.5
625	. . .	18.3	24.3	36.6	54.9	91.2	152.0
650	. . .	14.1	18.9	28.1	42.5	70.7	117.7
675	. . .	12.4	16.9	25.2	37.6	62.7	104.5
700	. . .	10.1	13.4	20.0	29.8	49.7	83.0
725	. . .	7.9	10.5	15.4	23.2	38.6	64.4
750	. . .	5.9	7.9	11.7	17.6	29.6	49.1
775	. . .	4.6	6.2	9.0	13.7	22.8	38.0
800	. . .	3.5	4.8	7.0	10.5	17.4	29.2
816	. . .	2.8	3.8	5.9	8.6	14.1	23.8

NOTES:

(1) Not to be used over 538°C.

(2) For temperatures over 538°C, use only if the material is heat treated by heating to a minimum temperature of 1095°C.

Copyright ASME International
Provided by IHS under license with ASME
No reproduction or networking permitted without license from IHS
Not for Resale

Table 2-2.6 Pressure–Temperature Ratings for Group 2.6 Materials

Nominal Designation		Forgings		Castings		Plates
23Cr–12Ni						A 240 Gr. 309H
			Working Pressures by Classes, bar			
Class Temp., °C	150	300	400	600	900	1500	2500
–29 to 38	19.0	49.6	66.2	99.3	148.9	248.2	413.7
50	18.5	48.3	64.4	96.6	144.9	241.5	402.5
100	16.5	43.1	57.5	86.2	129.3	215.5	359.2
150	15.3	40.0	53.3	80.0	120.0	200.0	333.3
200	13.8	37.8	50.3	75.5	113.3	188.8	314.7
250	12.1	36.1	48.1	72.1	108.2	180.4	300.6
300	10.2	34.8	46.4	69.6	104.4	173.9	289.9
325	9.3	34.2	45.7	68.5	102.7	171.2	285.4
350	8.4	33.8	45.1	67.6	101.4	169.0	281.7
375	7.4	33.4	44.5	66.8	100.1	166.9	278.2
400	6.5	33.1	44.1	66.1	99.2	165.4	275.6
425	5.5	32.6	43.5	65.3	97.9	163.1	271.9
450	4.6	32.2	42.9	64.4	96.5	160.9	268.2
475	3.7	31.7	42.3	63.4	95.1	158.2	263.9
500	2.8	28.2	37.6	56.5	84.7	140.9	235.0
538	1.4	25.2	33.4	50.0	75.2	125.5	208.9
550	...	25.0	33.3	49.8	74.8	124.9	208.0
575	...	22.2	29.6	44.4	66.5	110.9	184.8
600	...	16.8	22.4	33.5	50.3	83.9	139.8
625	...	12.5	16.7	25.0	37.5	62.5	104.2
650	...	9.4	12.5	18.7	28.1	46.8	78.0
675	...	7.2	9.6	14.5	21.7	36.2	60.3
700	...	5.5	7.3	11.0	16.5	27.5	45.9
725	...	4.3	5.8	8.7	13.0	21.6	36.0
750	...	3.4	4.6	6.8	10.2	17.1	28.4
775	...	2.7	3.6	5.4	8.1	13.5	22.4
800	...	2.1	2.8	4.2	6.3	10.5	17.5
816	...	1.8	2.4	3.5	5.3	8.9	14.8

Copyright ASME International
Provided by IHS under license with ASME
No reproduction or networking permitted without license from IHS
Not for Resale

Table 2-2.7 Pressure–Temperature Ratings for Group 2.7 Materials

Nominal Designation	Forgings	Castings	Plates
25Cr–20Ni	A 182 Gr. F310 (1), (2)		A 240 Gr. 310H

	Working Pressures by Classes, bar						
Class Temp., °C	150	300	400	600	900	1500	2500
−29 to 38	19.0	49.6	66.2	99.3	148.9	248.2	413.7
50	18.5	48.4	64.5	96.7	145.1	241.8	403.1
100	16.6	43.4	57.9	86.8	130.2	217.0	361.6
150	15.3	40.0	53.3	80.0	120.0	200.0	333.3
200	13.8	37.6	50.1	75.2	112.8	188.0	313.4
250	12.1	35.8	47.7	71.5	107.3	178.8	298.1
300	10.2	34.5	45.9	68.9	103.4	172.3	287.2
325	9.3	33.9	45.2	67.7	101.6	169.3	282.2
350	8.4	33.3	44.4	66.6	99.9	166.5	277.6
375	7.4	32.9	43.8	65.7	98.6	164.3	273.8
400	6.5	32.4	43.2	64.8	97.3	162.1	270.2
425	5.5	32.1	42.8	64.2	96.4	160.6	267.7
450	4.6	31.7	42.2	63.4	95.1	158.4	264.0
475	3.7	31.2	41.7	62.5	93.7	156.2	260.3
500	2.8	28.2	37.6	56.5	84.7	140.9	235.0
538	1.4	25.2	33.4	50.0	75.2	125.5	208.9
550	...	25.0	33.3	49.8	74.8	124.9	208.0
575	...	22.2	29.6	44.4	66.5	110.9	184.8
600	...	16.8	22.4	33.5	50.3	83.9	139.8
625	...	12.5	16.7	25.0	37.5	62.5	104.2
650	...	9.4	12.5	18.7	28.1	46.8	78.0
675	...	7.2	9.6	14.5	21.7	36.2	60.3
700	...	5.5	7.3	11.0	16.5	27.5	45.9
725	...	4.3	5.8	8.7	13.0	21.6	36.0
750	...	3.4	4.6	6.8	10.2	17.1	28.4
775	...	2.7	3.5	5.3	8.0	13.3	22.1
800	...	2.1	2.8	4.1	6.2	10.3	17.2
816	...	1.8	2.4	3.5	5.3	8.9	14.8

NOTES:

(1) At temperatures over 538°C, use only when the carbon content is 0.04% or higher.

(2) Service temperatures of 565°C and above should be used only when assurance is provided that grain size is not finer than ASTM 6.

Copyright ASME International
Provided by IHS under license with ASME
No reproduction or networking permitted without license from IHS Not for Resale

Table 2-2.8 Pressure–Temperature Ratings for Group 2.8 Materials

Nominal Designation	Forgings	Castings	Plates
20Cr–18Ni–6Mo	A 182 Gr. F44	A 351 Gr. CK3MCuN	A 240 Gr. S31254
22Cr–5Ni–3Mo–N	A 182 Gr. F51 (1)		A 240 Gr. S31803 (1)
25Cr–7Ni–4Mo–N	A 182 Gr. F53 (1)		A 240 Gr. S32750 (1)
24Cr–10Ni–4Mo–V		A 351 Gr. CE8MN (1)	
25Cr–5Ni–2Mo–3Cu		A 351 Gr. CD4MCu (1)	
25Cr–7Ni–3.5Mo–W–Cb		A 351 Gr. CD3MWCuN (1)	
25Cr–7Ni–3.5Mo–N–Cu–W	A 182 Gr. F55 (1)		A 240 Gr. S32760 (1)

Working Pressures by Classes, bar							
Class Temp., °C	150	300	400	600	900	1500	2500
–29 to 38	20.0	51.7	68.9	103.4	155.1	258.6	430.9
50	19.5	51.7	68.9	103.4	155.1	258.6	430.9
100	17.7	50.7	67.5	101.3	152.0	253.3	422.2
150	15.8	45.9	61.2	91.9	137.8	229.6	382.7
200	13.8	42.7	56.9	85.3	128.0	213.3	355.4
250	12.1	40.5	53.9	80.9	121.4	202.3	337.2
300	10.2	38.9	51.8	77.7	116.6	194.3	323.8
325	9.3	38.2	50.9	76.3	114.5	190.8	318.0
350	8.4	37.6	50.2	75.3	112.9	188.2	313.7
375	7.4	37.4	49.8	74.7	112.1	186.8	311.3
400	6.5	36.5	48.9	73.3	109.8	183.1	304.9

NOTE:
(1) This steel may become brittle after service at moderately elevated temperatures. Not to be used over 315°C.

Copyright ASME International
Provided by IHS under license with ASME
No reproduction or networking permitted without license from IHS Not for Resale

Table 2-2.9 Pressure–Temperature Ratings for Group 2.9 Materials

Nominal Designation	Forgings	Castings	Plates
23Cr–12Ni			A 240 Gr. 309S (1), (2), (3)
25Cr–20Ni			A 240 Gr. 310S (1), (2), (3)

	Working Pressures by Classes, bar						
Class Temp., °C	150	300	400	600	900	1500	2500
−29 to 38	19.0	49.6	66.2	99.3	148.9	248.2	413.7
50	18.5	48.3	64.4	96.6	144.9	241.5	402.5
100	16.5	43.1	57.5	86.2	129.3	215.5	359.2
150	15.3	40.0	53.3	80.0	120.0	200.0	333.3
200	13.8	37.6	50.1	75.2	112.8	188.0	313.4
250	12.1	35.8	47.7	71.5	107.3	178.8	298.1
300	10.2	34.5	45.9	68.9	103.4	172.3	287.2
325	9.3	33.9	45.2	67.7	101.6	169.3	282.2
350	8.4	33.3	44.4	66.6	99.9	166.5	277.6
375	7.4	32.9	43.8	65.7	98.6	164.3	273.8
400	6.5	32.4	43.2	64.8	97.3	162.1	270.2
425	5.5	32.1	42.8	64.2	96.4	160.6	267.7
450	4.6	31.7	42.2	63.4	95.1	158.4	264.0
475	3.7	31.2	41.7	62.5	93.7	156.2	260.3
500	2.8	28.2	37.6	56.5	84.7	140.9	235.0
538	1.4	23.4	31.2	46.8	70.2	117.0	195.0
550	...	20.5	27.3	41.0	61.5	102.5	170.8
575	...	15.1	20.1	30.2	45.3	75.5	125.8
600	...	11.0	14.7	22.1	33.1	55.1	91.9
625	...	8.1	10.9	16.3	24.4	40.7	67.9
650	...	5.8	7.8	11.6	17.4	29.1	48.5
675	...	3.7	4.9	7.4	11.1	18.4	30.7
700	...	2.2	2.9	4.3	6.5	10.8	18.0
725	...	1.4	1.8	2.7	4.1	6.8	11.4
750	...	1.0	1.4	2.1	3.1	5.2	8.6
775	...	0.8	1.1	1.6	2.5	4.1	6.8
800	...	0.6	0.8	1.2	1.8	3.0	5.0
816	...	0.5	0.6	0.9	1.4	2.4	3.9

NOTES:

(1) At temperatures over 538°C, use only when the carbon content is 0.04% or higher.

(2) At temperatures above 538°C, use only if the material is solution heat treated to the minimum temperature specified in the specification but not lower than 1035°C, and quenching in water or rapidly cooling by other means.

(3) This material should be used for service temperatures 565°C and above only when assurance is provided that grain size is not finer than ASTM 6.

Copyright ASME International
Provided by IHS under license with ASME
No reproduction or networking permitted without license from IHS Not for Resale

Table 2-2.10 Pressure–Temperature Ratings for Group 2.10 Materials

Nominal Designation	Forgings	Castings	Plates
25Cr–12Ni		A 351 Gr. CH8 (1) A 351 Gr. CH20 (1)	

Working Pressures by Classes, bar							
Class Temp., °C	150	300	400	600	900	1500	2500
–29 to 38	17.8	46.3	61.8	92.7	139.0	231.7	386.1
50	17.0	44.5	59.3	89.0	133.4	222.4	370.6
100	14.4	37.5	50.0	75.1	112.6	187.7	312.8
150	13.4	34.9	46.5	69.8	104.7	174.4	290.7
200	12.9	33.5	44.7	67.1	100.6	167.7	279.5
250	12.1	32.6	43.5	65.2	97.8	163.1	271.8
300	10.2	31.7	42.3	63.4	95.2	158.6	264.3
325	9.3	31.2	41.6	62.4	93.6	156.1	260.1
350	8.4	30.6	40.8	61.2	91.7	152.9	254.8
375	7.4	29.8	39.8	59.7	89.5	149.2	248.6
400	6.5	29.1	38.8	58.2	87.3	145.5	242.4
425	5.5	28.3	37.8	56.7	85.0	141.7	236.2
450	4.6	27.6	36.8	55.2	82.8	138.0	230.0
475	3.7	26.7	35.6	53.5	80.2	133.7	222.8
500	2.8	25.8	34.5	51.7	77.5	129.2	215.3
538	1.4	23.3	31.1	46.6	70.0	116.6	194.4
550	...	21.9	29.2	43.8	65.7	109.5	182.5
575	...	18.5	24.6	37.0	55.5	92.4	154.0
600	...	14.5	19.4	29.0	43.5	72.6	121.0
625	...	11.4	15.2	22.8	34.3	57.1	95.2
650	...	8.9	11.9	17.8	26.7	44.5	74.1
675	...	7.0	9.3	14.0	20.9	34.9	58.2
700	...	5.7	7.6	11.3	17.0	28.3	47.2
725	...	4.6	6.1	9.1	13.7	22.8	38.0
750	...	3.5	4.7	7.0	10.5	17.5	29.2
775	...	2.6	3.4	5.1	7.7	12.8	21.4
800	...	2.0	2.7	4.0	6.1	10.1	16.9
816	...	1.9	2.5	3.8	5.7	9.5	15.8

NOTE:
(1) At temperatures over 538°C, use only when the carbon content is 0.04% or higher.

Copyright ASME International
Provided by IHS under license with ASME
No reproduction or networking permitted without license from IHS
Not for Resale

Table 2-2.11 Pressure–Temperature Ratings for Group 2.11 Materials

Nominal Designation	Forgings		Castings			Plates
18Cr–10Ni–Cb			A 351 Gr. CF8C (1)			
	Working Pressures by Classes, bar					
Class Temp., °C	150	300	400	600	900	1500	2500
–29 to 38	19.0	49.6	66.2	99.3	148.9	248.2	413.7
50	18.7	48.8	65.0	97.5	146.3	243.8	406.4
100	17.4	45.3	60.4	90.6	135.9	226.5	377.4
150	15.8	42.5	56.6	84.9	127.4	212.4	353.9
200	13.8	39.9	53.3	79.9	119.8	199.7	332.8
250	12.1	37.8	50.4	75.6	113.4	189.1	315.1
300	10.2	36.1	48.1	72.2	108.3	180.4	300.7
325	9.3	35.4	47.1	70.7	106.1	176.8	294.6
350	8.4	34.8	46.3	69.5	104.3	173.8	289.6
375	7.4	34.2	45.6	68.4	102.6	171.0	285.1
400	6.5	33.9	45.2	67.8	101.7	169.5	282.6
425	5.5	33.6	44.8	67.2	100.8	168.1	280.1
450	4.6	33.5	44.6	66.9	100.4	167.3	278.8
475	3.7	31.7	42.3	63.4	95.1	158.2	263.9
500	2.8	28.2	37.6	56.5	84.7	140.9	235.0
538	1.4	25.2	33.4	50.0	75.2	125.5	208.9
550	...	25.0	33.3	49.8	74.8	124.9	208.0
575	...	24.0	31.9	47.9	71.8	119.7	199.5
600	...	19.8	26.4	39.6	59.4	99.0	165.1
625	...	13.9	18.5	27.7	41.6	69.3	115.5
650	...	10.3	13.7	20.6	30.9	51.5	85.8
675	...	8.0	10.6	15.9	23.9	39.8	66.3
700	...	5.6	7.5	11.2	16.8	28.1	46.8
725	...	4.0	5.3	8.0	11.9	19.9	33.1
750	...	3.1	4.1	6.2	9.3	15.5	25.8
775	...	2.5	3.3	4.9	7.4	12.3	20.4
800	...	2.0	2.7	4.0	6.1	10.1	16.9
816	...	1.9	2.5	3.8	5.7	9.5	15.8

NOTE:
(1) At temperatures over 538°C, use only when the carbon content is 0.04% or higher.

Copyright ASME International
Provided by IHS under license with ASME
No reproduction or networking permitted without license from IHS Not for Resale

Table 2-2.12 Pressure–Temperature Ratings for Group 2.12 Materials

Nominal Designation	Forgings		Castings			Plates
25Cr–20Ni			A351 Gr. CK20 (1)			
	Working Pressures by Classes, bar					
Class Temp., °C	150	300	400	600	900	1500	2500
–29 to 38	17.8	46.3	61.8	92.7	139.0	231.7	386.1
50	17.0	44.5	59.3	89.0	133.4	222.4	370.6
100	14.4	37.5	50.0	75.1	112.6	187.7	312.8
150	13.4	34.9	46.5	69.8	104.7	174.4	290.7
200	12.9	33.5	44.7	67.1	100.6	167.7	279.5
250	12.1	32.6	43.5	65.2	97.8	163.1	271.8
300	10.2	31.7	42.3	63.4	95.2	158.6	264.3
325	9.3	31.2	41.6	62.4	93.6	156.1	260.1
350	8.4	30.6	40.8	61.2	91.7	152.9	254.8
375	7.4	29.8	39.8	59.7	89.5	149.2	248.6
400	6.5	29.1	38.8	58.2	87.3	145.5	242.4
425	5.5	28.3	37.8	56.7	85.0	141.7	236.2
450	4.6	27.6	36.8	55.2	82.8	138.0	230.0
475	3.7	26.7	35.6	53.5	80.2	133.7	222.8
500	2.8	25.8	34.5	51.7	77.5	129.2	215.3
538	1.4	23.3	31.1	46.6	70.0	116.6	194.4
550	...	22.9	30.6	45.9	68.8	114.7	191.2
575	...	21.7	28.9	43.3	65.0	108.3	180.4
600	...	19.4	25.9	38.8	58.2	97.1	161.8
625	...	16.8	22.4	33.7	50.5	84.1	140.2
650	...	14.1	18.8	28.1	42.2	70.4	117.3
675	...	11.5	15.4	23.0	34.6	57.6	96.0
700	...	8.8	11.7	17.5	26.3	43.8	73.0
725	...	6.3	8.5	12.7	19.0	31.7	52.9
750	...	4.5	6.0	8.9	13.4	22.3	37.2
775	...	3.1	4.2	6.3	9.4	15.7	26.2
800	...	2.3	3.1	4.6	6.9	11.4	19.1
816	...	1.9	2.5	3.8	5.7	9.5	15.8

NOTE:
(1) At temperatures over 538°C, use only when the carbon content is 0.04% or higher.

Copyright ASME International
Provided by IHS under license with ASME
No reproduction or networking permitted without license from IHS Not for Resale

Table 2-3.1 Pressure–Temperature Ratings for Group 3.1 Materials

Nominal Designation	Forgings	Castings	Plates
35Ni–35Fe–10Cr–Cb	B 462 Gr. N08020 (1)		B 463 Gr. N08020 (1)

	Working Pressures by Classes, bar						
Class Temp., °C	150	300	400	600	900	1500	2500
–29 to 38	20.0	51.7	68.9	103.4	155.1	258.6	430.9
50	19.5	51.7	68.9	103.4	155.1	258.6	430.9
100	17.7	50.9	67.8	101.7	152.6	254.4	423.9
150	15.8	48.9	65.3	97.9	146.8	244.7	407.8
200	13.8	47.2	62.9	94.3	141.5	235.8	392.9
250	12.1	45.5	60.7	91.0	136.5	227.5	379.2
300	10.2	42.9	57.0	85.7	128.6	214.4	357.1
325	9.3	41.4	55.0	82.6	124.0	206.6	344.3
350	8.4	40.3	53.6	80.4	120.7	201.1	335.3
375	7.4	38.9	51.6	77.6	116.5	194.1	323.2
400	6.5	36.5	48.9	73.3	109.8	183.1	304.9
425	5.5	35.2	46.5	70.0	105.1	175.1	291.6

NOTE:
(1) Use annealed material only.

Table 2-3.2 Pressure–Temperature Ratings for Group 3.2 Materials

Nominal Designation	Forgings	Castings	Plates
99.0Ni	B 160 Gr. N02200 (1), (2)		B 162 Gr. N02200 (1)

	Working Pressures by Classes, bar						
Class Temp., °C	150	300	400	600	900	1500	2500
–29 to 38	12.7	33.1	44.1	66.2	99.3	165.5	275.8
50	12.7	33.1	44.1	66.2	99.3	165.5	275.8
100	12.7	33.1	44.1	66.2	99.3	165.5	275.8
150	12.7	33.1	44.1	66.2	99.3	165.5	275.8
200	12.7	33.1	44.1	66.2	99.3	165.5	275.8
250	12.1	31.6	42.1	63.2	94.8	158.0	263.4
300	10.2	29.2	39.0	58.5	87.7	146.2	243.7
325	7.2	18.8	25.0	37.6	56.4	93.9	156.5

NOTES:
(1) Use annealed material only.
(2) The chemical composition, mechanical properties, heat treating requirements, and grain size requirements shall conform to the applicable ASTM specification. The manufacturing procedures tolerances, tests, certification, and markings shall be in accordance with ASTM B 564.

Copyright ASME International
Provided by IHS under license with ASME
No reproduction or networking permitted without license from IHS Not for Resale

Table 2-3.3 Pressure–Temperature Ratings for Group 3.3 Materials

Nominal Designation	Forgings			Castings		Plates
99.0Ni–Low C	B 160 Gr. N02201 (1), (2)					B 162 Gr. N02201 (1)
	Working Pressures by Classes, bar					
Class Temp., °C	150	300	400	600	900	1500	2500
–29 to 38	6.3	16.5	22.1	33.1	49.6	82.7	137.9
50	6.3	16.4	21.9	32.8	49.2	82.0	136.7
100	6.1	15.8	21.1	31.7	47.5	79.2	132.0
150	6.0	15.6	20.7	31.1	46.7	77.8	129.6
200	6.0	15.6	20.7	31.1	46.7	77.8	129.6
250	6.0	15.6	20.7	31.1	46.7	77.8	129.6
300	6.0	15.6	20.7	31.1	46.7	77.8	129.6
325	5.9	15.5	20.7	31.0	46.5	77.5	129.2
350	5.9	15.4	20.5	30.8	46.2	76.9	128.2
375	5.9	15.4	20.5	30.7	46.1	76.8	128.0
400	5.8	15.2	20.3	30.4	45.6	76.1	126.8
425	5.5	14.9	19.9	29.8	44.7	74.6	124.3
450	4.6	14.6	19.5	29.2	43.8	73.1	121.8
475	3.7	14.3	19.1	28.6	43.0	71.6	119.3
500	2.8	13.8	18.4	27.6	41.4	69.0	115.1
538	1.4	13.1	17.4	26.1	39.2	65.4	108.9
550	. . .	9.8	13.1	19.6	29.5	49.1	81.8
575	. . .	5.4	7.1	10.7	16.1	26.8	44.6
600	. . .	4.4	5.9	8.9	13.3	22.2	37.0
625	. . .	3.4	4.6	6.9	10.3	17.2	28.7
650	. . .	2.8	3.8	5.7	8.5	14.2	23.6

NOTES:

(1) Use annealed material only.

(2) The chemical composition, mechanical properties, heat treating requirements, and grain size requirements shall conform to the applicable ASTM specification. The manufacturing procedures, tolerances, tests, certification, and markings shall be in accordance with ASTM B 564.

Copyright ASME International
Provided by IHS under license with ASME
No reproduction or networking permitted without license from IHS
Not for Resale

Table 2-3.4 Pressure–Temperature Ratings for Group 3.4 Materials

Nominal Designation	Forgings	Castings	Plates
67Ni–30Cu	B 564 Gr. N04400 (1)		B 127 Gr. N04400 (1)
67Ni–30Cu–S	B 164 Gr. N04405 (1), (2)		

	Working Pressures by Classes, bar						
Class Temp., °C	150	300	400	600	900	1500	2500
–29 to 38	15.9	41.4	55.2	82.7	124.1	206.8	344.7
50	15.4	40.2	53.7	80.5	120.7	201.2	335.3
100	13.8	35.9	47.9	71.9	107.8	179.7	299.5
150	12.9	33.7	45.0	67.5	101.2	168.7	281.1
200	12.5	32.7	43.6	65.4	98.1	163.5	272.4
250	12.1	32.6	43.5	65.2	97.8	163.0	271.7
300	10.2	32.6	43.5	65.2	97.8	163.0	271.7
325	9.3	32.6	43.5	65.2	97.8	163.0	271.7
350	8.4	32.6	43.4	65.1	97.7	162.8	271.3
375	7.4	32.4	43.2	64.8	97.2	161.9	269.9
400	6.5	32.1	42.8	64.2	96.2	160.4	267.4
425	5.5	31.6	42.2	63.3	94.9	158.2	263.6
450	4.6	26.9	35.9	53.8	80.7	134.5	224.2
475	3.7	20.8	27.7	41.5	62.3	103.8	173.0

NOTES:

(1) Use annealed material only.

(2) The chemical composition, mechanical properties, heat treating requirements, and grain size requirements shall conform to the applicable ASTM specification. The manufacturing procedures, tolerances, tests, certification, and markings shall be in accordance with ASTM B 564.

Copyright ASME International
Provided by IHS under license with ASME
No reproduction or networking permitted without license from IHS
Not for Resale

Table 2-3.5 Pressure–Temperature Ratings for Group 3.5 Materials

Nominal Designation	Forgings	Castings	Plates
72Ni–15Cr–8Fe	B 564 Gr. N06600 (1)		B 168 Gr. N06600 (1)

	Working Pressures by Classes, bar						
Class Temp., °C	150	300	400	600	900	1500	2500
–29 to 38	20.0	51.7	68.9	103.4	155.1	258.6	430.9
50	19.5	51.7	68.9	103.4	155.1	258.6	430.9
100	17.7	51.5	68.7	103.0	154.6	257.6	429.4
150	15.8	50.3	66.8	100.3	150.6	250.8	418.2
200	13.8	48.6	64.8	97.2	145.8	243.4	405.4
250	12.1	46.3	61.7	92.7	139.0	231.8	386.2
300	10.2	42.9	57.0	85.7	128.6	214.4	357.1
325	9.3	41.4	55.0	82.6	124.0	206.6	344.3
350	8.4	40.3	53.6	80.4	120.7	201.1	335.3
375	7.4	38.9	51.6	77.6	116.5	194.1	323.2
400	6.5	36.5	48.9	73.3	109.8	183.1	304.9
425	5.5	35.2	46.5	70.0	105.1	175.1	291.6
450	4.6	33.7	45.1	67.7	101.4	169.0	281.8
475	3.7	31.7	42.3	63.4	95.1	158.2	263.9
500	2.8	28.2	37.6	56.5	84.7	140.9	235.0
538	1.4	16.5	22.1	33.1	49.6	82.7	137.9
550	...	13.9	18.6	27.9	41.8	69.7	116.2
575	...	9.4	12.6	18.9	28.3	47.2	78.6
600	...	6.6	8.9	13.3	19.9	33.2	55.3
625	...	5.1	6.8	10.3	15.4	25.7	42.8
650	...	4.7	6.3	9.5	14.2	23.6	39.4

NOTE:
(1) Use annealed material only.

Copyright ASME International
Provided by IHS under license with ASME
No reproduction or networking permitted without license from IHS Not for Resale

Table 2-3.6 Pressure–Temperature Ratings for Group 3.6 Materials

Nominal Designation	Forgings	Castings	Plates
33Ni–42Fe–21Cr	B 564 Gr. N08800 (1)		B 409 Gr. N08800 (1)

	Working Pressures by Classes, bar						
Class Temp., °C	150	300	400	600	900	1500	2500
–29 to 38	19.0	49.6	66.2	99.3	148.9	248.2	413.7
50	18.7	48.8	65.1	97.6	146.4	244.0	406.7
100	17.5	45.6	60.8	91.2	136.9	228.1	380.1
150	15.8	44.0	58.7	88.0	132.0	219.9	366.6
200	13.8	42.8	57.1	85.6	128.4	214.0	356.7
250	12.1	41.7	55.7	83.5	125.2	208.7	347.9
300	10.2	40.8	54.4	81.6	122.5	204.1	340.2
325	9.3	40.3	53.8	80.6	120.9	201.6	336.0
350	8.4	39.8	53.0	79.5	119.3	198.8	331.3
375	7.4	38.9	51.6	77.6	116.5	194.1	323.2
400	6.5	36.5	48.9	73.3	109.8	183.1	304.9
425	5.5	35.2	46.5	70.0	105.1	175.1	291.6
450	4.6	33.7	45.1	67.7	101.4	169.0	281.8
475	3.7	31.7	42.3	63.4	95.1	158.2	263.9
500	2.8	28.2	37.6	56.5	84.7	140.9	235.0
538	1.4	25.2	33.4	50.0	75.2	125.5	208.9
550	...	25.0	33.3	49.8	74.8	124.9	208.0
575	...	24.0	31.9	47.9	71.8	119.7	199.5
600	...	21.6	28.6	42.9	64.2	107.0	178.5
625	...	18.3	24.3	36.6	54.9	91.2	152.0
650	...	14.1	18.9	28.1	42.5	70.7	117.7
675	...	10.3	13.7	20.5	30.8	51.3	85.6
700	...	5.6	7.4	11.1	16.7	27.8	46.3
725	...	4.0	5.4	8.1	12.1	20.1	33.6
750	...	3.0	4.0	6.1	9.1	15.1	25.2
775	...	2.5	3.3	4.9	7.4	12.4	20.6
800	...	2.2	2.9	4.3	6.5	10.8	18.0
816	...	1.9	2.5	3.8	5.7	9.5	15.8

NOTE:
(1) Use annealed material only.

Copyright ASME International
Provided by IHS under license with ASME
No reproduction or networking permitted without license from IHS
Not for Resale

Table 2-3.7 Pressure–Temperature Ratings for Group 3.7 Materials

Nominal Designation	Forgings	Castings	Plates
65Ni–28Mo–2Fe	B 462 Gr. N10665 (1)		B 333 Gr. N10665 (1)
64Ni–29.5Mo–2Cr–2Fe–Mn–W	B 462 Gr. N10675 (1)		B 333 Gr. N10675 (1)

	Working Pressures by Classes, bar						
Class Temp., °C	150	300	400	600	900	1500	2500
–29 to 38	20.0	51.7	68.9	103.4	155.1	258.6	430.9
50	19.5	51.7	68.9	103.4	155.1	258.6	430.9
100	17.7	51.5	68.7	103.0	154.6	257.6	429.4
150	15.8	50.3	66.8	100.3	150.6	250.8	418.2
200	13.8	48.6	64.8	97.2	145.8	243.4	405.4
250	12.1	46.3	61.7	92.7	139.0	231.8	386.2
300	10.2	42.9	57.0	85.7	128.6	214.4	357.1
325	9.3	41.4	55.0	82.6	124.0	206.6	344.3
350	8.4	40.3	53.6	80.4	120.7	201.1	335.3
375	7.4	38.9	51.6	77.6	116.5	194.1	323.2
400	6.5	36.5	48.9	73.3	109.8	183.1	304.9
425	5.5	35.2	46.5	70.0	105.1	175.1	291.6

NOTE:
(1) Use solution annealed material only.

Copyright ASME International
Provided by IHS under license with ASME
No reproduction or networking permitted without license from IHS
Not for Resale

Table 2-3.8 Pressure–Temperature Ratings for Group 3.8 Materials

Nominal Designation	Forgings	Castings	Plates
54Ni–16Mo–15Cr	B 462 Gr. N10276 (1), (2)		B 575 Gr. N10276 (1), (2)
60Ni–22Cr–9Mo–3.5Cb	B 564 Gr. N06625 (3), (4)		B 443 Gr. N06625 (3), (4)
62Ni–28Mo–5Fe	B 335 Gr. N10001 (1), (2), (5)		B 333 Gr. N10001 (1), (5)
70Ni–16Mo–7Cr–5Fe	B 573 Gr. N10003 (6), (3)		8 434 Gr. N10003 (3)
61Ni–16Mo–16Cr	B 574 Gr. N06455 (1), (6), (5)		B 575 Gr. N06455 (1), (5)
42Ni–21.5Cr–3Mo–2.3Cu	B 564 Gr. N08825 (3), (7)		B 424 Gr. N08825 (3), (7)
55Ni–21Cr–13.5Mo	B 462 Gr. N06022 (1), (2), (8)		B 575 Gr. N06022 (1), (2), (8)
55Ni–23Cr–16Mo–1.6Cu	B 462 Gr. N06200 (1), (5)		B 575 Gr. N06200 (1), (5)

	Working Pressures by Classes, bar						
Class Temp., °C	150	300	400	600	900	1500	2500
−29 to 38	20.0	51.7	68.9	103.4	155.1	258.6	430.9
50	19.5	51.7	68.9	103.4	155.1	258.6	430.9
100	17.7	51.5	68.7	103.0	154.6	257.6	429.4
150	15.8	50.3	66.8	100.3	150.6	250.8	418.2
200	13.8	48.3	64.5	96.7	145.0	241.7	402.8
250	12.1	46.3	61.7	92.7	139.0	231.8	386.2
300	10.2	42.9	57.0	85.7	128.6	214.4	357.1
325	9.3	41.4	55.0	82.6	124.0	206.6	344.3
350	8.4	40.3	53.6	80.4	120.7	201.1	335.3
375	7.4	38.9	51.6	77.6	116.5	194.1	323.2
400	6.5	36.5	48.9	73.3	109.8	183.1	304.9
425	5.5	35.2	46.5	70.0	105.1	175.1	291.6
450	4.6	33.7	45.1	67.7	101.4	169.0	281.8
475	3.7	31.7	42.3	63.4	95.1	158.2	263.9
500	2.8	28.2	37.6	56.5	84.7	140.9	235.0
538	1.4	25.2	33.4	50.0	75.2	125.5	208.9
550	. . .	25.0	33.3	49.8	74.8	124.9	208.0
575	. . .	24.0	31.9	47.9	71.8	119.7	199.5
600	. . .	21.6	28.6	42.9	64.2	107.0	178.5
625	. . .	18.3	24.3	36.6	54.9	91.2	152.0
650	. . .	14.1	18.8	28.1	42.2	70.4	117.3
675	. . .	11.5	15.4	23.0	34.6	57.6	96.0
700	. . .	8.8	11.7	17.5	26.3	43.8	73.0

NOTES:

(1) Use solution annealed material only.

(2) Not to be used over 675°C.

(3) Use annealed material only.

(4) Not to be used over 645°C. Alloy N06625 in the annealed condition is subject to severe loss of impact strength at room temperatures after exposure in the range of 538°C to 760°C.

(5) Not to be used over 425°C.

(6) The chemical composition, mechanical properties, heat treating requirements, and grain size requirements shall conform to the applicable ASTM specification. The manufacturing procedures, tolerances, tests, certification, and markings shall be in accordance with ASTM B 564.

(7) Not to be used over 538°C.

(8) Alloy N06022 in the solution annealed condition is subject to severe loss of impact strength at room temperature after exposure to temperatures in the range of 538°C to 675°C.

--`,,```,,,,````-`-`,,`,,`,`,,`---

Copyright ASME International
Provided by IHS under license with ASME
No reproduction or networking permitted without license from IHS Not for Resale

Table 2-3.9 Pressure–Temperature Ratings for Group 3.9 Materials

Nominal Designation	Forgings	Castings	Plates
47Ni–22Cr–9Mo–18Fe	B 572 Gr. N06002 (1), (2)		B 435 Gr. N06002 (1)

	Working Pressures by Classes, bar						
Class Temp., °C	150	300	400	600	900	1500	2500
–29 to 38	20.0	51.7	68.9	103.4	155.1	258.6	430.9
50	19.5	51.7	68.9	103.4	155.1	258.6	430.9
100	17.7	51.5	68.7	103.0	154.6	257.6	429.4
150	15.8	47.6	63.4	95.2	142.8	237.9	396.5
200	13.8	44.3	59.1	88.6	132.9	221.5	369.2
250	12.1	41.6	55.4	83.1	124.7	207.9	346.4
300	10.2	39.5	52.7	79.0	118.5	197.4	329.1
325	9.3	38.6	51.5	77.2	115.8	193.0	321.7
350	8.4	37.9	50.5	75.8	113.7	189.5	315.8
375	7.4	37.3	49.8	74.7	112.0	186.6	311.1
400	6.5	36.5	48.9	73.3	109.8	183.1	304.9
425	5.5	35.2	46.5	70.0	105.1	175.1	291.6
450	4.6	33.7	45.1	67.7	101.4	169.0	281.8
475	3.7	31.7	42.3	63.4	95.1	158.2	263.9
500	2.8	28.2	37.6	56.5	84.7	140.9	235.0
538	1.4	25.2	33.4	50.0	75.2	125.5	208.9
550	...	25.0	33.3	49.8	74.8	124.9	208.0
575	...	24.0	31.9	47.9	71.8	119.7	199.5
600	...	21.6	28.6	42.9	64.2	107.0	178.5
625	...	18.3	24.3	36.6	54.9	91.2	152.0
650	...	14.1	18.9	28.1	42.5	70.7	117.7
675	...	12.4	16.9	25.2	37.6	62.7	104.5
700	...	10.1	13.4	20.0	29.8	49.7	83.0
725	...	7.9	10.5	15.4	23.2	38.6	64.4
750	...	5.9	7.9	11.7	17.6	29.6	49.1
775	...	4.6	6.2	9.0	13.7	22.8	38.0
800	...	3.5	4.8	7.0	10.5	17.4	29.2
816	...	2.8	3.8	5.9	8.6	14.1	23.8

NOTES:

(1) Use solution annealed material only.

(2) The chemical composition, mechanical properties, heat treating requirements, and grain size requirements shall conform to the applicable ASTM specification. The manufacturing procedures, tolerances, tests, certification, and markings shall be in accordance with ASTM B 564.

Copyright ASME International
Provided by IHS under license with ASME
No reproduction or networking permitted without license from IHS
Not for Resale

Table 2-3.10 Pressure–Temperature Ratings for Group 3.10 Materials

Nominal Designation	Forgings		Castings			Plates
25Ni–46Fe–21Cr–5Mo	B 672 Gr. N08700 (1), (2)					B 599 Gr. N08700 (1)
	Working Pressures by Classes, bar					
Class Temp., °C	150	300	400	600	900	1500	2500
–29 to 38	20.0	51.7	68.9	103.4	155.1	258.6	430.9
50	19.5	51.7	68.9	103.4	155.1	258.6	430.9
100	17.7	51.5	68.7	103.0	154.6	257.6	429.4
150	15.8	47.1	62.8	94.2	141.3	235.5	392.5
200	13.8	44.3	59.0	88.5	132.8	221.3	368.9
250	12.1	42.8	57.1	85.6	128.4	214.0	356.6
300	10.2	41.3	55.1	82.7	124.0	206.7	344.5
325	9.3	40.4	53.8	80.7	121.1	201.8	336.4
350	8.4	38.9	51.9	77.8	116.7	194.5	324.2

NOTES:

(1) Use solution annealed material only.

(2) The chemical composition, mechanical properties, heat treating requirements, and grain size requirements shall conform to the applicable ASTM specification. The manufacturing procedures, tolerances, tests, certification, and markings shall be in accordance with ASTM B 564.

Table 2-3.11 Pressure–Temperature Ratings for Group 3.11 Materials

Nominal Designation	Forgings		Castings			Plates
44Fe–25Ni–21Cr–Mo	B 649 Gr. N08904 (1), (2)					B 625 Gr. N08904 (1)
	Working Pressures by Classes, bar					
Class Temp., °C	150	300	400	600	900	1500	2500
–29 to 38	19.7	51.3	68.4	102.6	153.9	256.5	427.5
50	18.8	49.1	65.5	98.3	147.4	245.7	409.6
100	15.7	41.1	54.7	82.1	123.2	205.3	342.1
150	14.4	37.5	50.0	75.0	112.5	187.5	312.5
200	13.3	34.7	46.2	69.3	104.0	173.4	288.9
250	12.1	32.0	42.6	64.0	95.9	159.9	266.5
300	10.2	30.0	40.0	60.0	90.0	150.1	250.1
325	9.3	29.2	39.0	58.5	87.7	146.1	243.6
350	8.4	28.7	38.2	57.3	86.0	143.4	238.9
375	7.4	28.2	37.7	56.5	84.7	141.2	235.4

NOTES:

(1) Use annealed materiel only.

(2) The chemical composition, mechanical properties, heat treating requirements, and grain size requirements shall conform to the applicable ASTM specification. The manufacturing procedures, tolerances, tests, certification, and markings shall be in accordance with ASTM B 564.

Copyright ASME International
Provided by IHS under license with ASME
No reproduction or networking permitted without license from IHS
Not for Resale

Table 2-3.12 Pressure–Temperature Ratings for Group 3.12 Materials

Nominal Designation	Forgings	Castings	Plates
26Ni–43Fe–22Cr–5Mo	B 621 Gr. N08320 (1), (2)		B 620 Gr. N08320 (1)
47Ni–22Cr–20Fe–7Mo	B 581 Gr. N06985 (1), (2)		B 582 Gr. N06985 (1)
46Fe–24Ni–21Cr–6Mo–Cu–N	B 462 Gr. N08367 (1)	A 351 Gr. CN3MN (1)	B 688 Gr. N08367 (1)

	Working Pressures by Classes, bar						
Class Temp., °C	150	300	400	600	900	1500	2500
–29 to 38	17.8	46.3	61.8	92.7	139.0	231.7	386.1
50	17.5	45.6	60.8	91.1	136.7	227.8	379.7
100	16.3	42.5	56.7	85.1	127.6	212.7	354.5
150	15.4	40.1	53.5	80.3	120.4	200.7	334.6
200	13.8	37.3	49.8	74.6	112.0	186.6	311.0
250	12.1	34.9	46.5	69.8	104.7	174.5	290.8
300	10.2	33.1	44.1	66.2	99.3	165.5	275.9
325	9.3	32.3	43.1	64.6	97.0	161.6	269.3
350	8.4	31.6	42.1	63.2	94.8	158.1	263.4
375	7.4	31.0	41.4	62.0	93.0	155.1	258.5
400	6.5	30.4	40.6	60.8	91.3	152.1	253.5
425	5.5	29.8	39.8	59.7	89.5	149.1	248.5

NOTES:
(1) Use solution annealed material only.
(2) The chemical composition, mechanical properties, heat treating requirements, and grain size requirements shall conform to the applicable ASTM specification. The manufacturing procedures, tolerances, tests, certification, and markings shall be in accordance with ASTM B 564.

Table 2-3.13 Pressure–Temperature Ratings for Group 3.13 Materials

Nominal Designation	Forgings	Castings	Plates
49Ni–25Cr–18Fe–6Mo	B 581 Gr. N06975 (1), (2)		B 582 Gr. N06975 (1)
Ni–Fe–Cr–Mo–Cu–Low C	B 564 Gr. N08031 (3)		B 625 Gr. N08031 (3)

	Working Pressures by Classes, bar						
Class Temp., °C	150	300	400	600	900	1500	2500
–29 to 38	20.0	51.7	68.9	103.4	155.1	258.6	430.9
50	19.5	51.7	68.9	103.4	155.1	258.6	430.9
100	17.7	48.2	64.2	96.3	144.5	240.8	401.4
150	15.8	45.8	61.0	91.6	137.4	228.9	381.6
200	13.8	43.6	58.1	87.1	130.7	217.8	362.9
250	12.1	41.5	55.3	82.9	124.4	207.3	345.5
300	10.2	39.4	52.5	78.7	118.1	196.8	328.1
325	9.3	38.4	51.3	76.9	115.3	192.2	320.3
350	8.4	37.7	50.3	75.5	113.2	188.7	314.5
375	7.4	37.2	49.5	74.3	111.5	185.8	309.7
400	6.5	36.5	48.9	73.3	109.8	183.1	304.9
425	5.5	35.2	46.5	70.0	105.1	175.1	291.6

NOTES:
(1) Use solution annealed material only.
(2) The chemical composition, mechanical properties, heat treating requirements, and grain size requirements shall conform to the applicable ASTM specification. The manufacturing procedures, tolerances, tests, certification, and markings shall be in accordance with ASTM B 564.
(3) Use annealed material only.

Copyright ASME International
Provided by IHS under license with ASME
No reproduction or networking permitted without license from IHS Not for Resale

Table 2-3.14 Pressure–Temperature Ratings for Group 3.14 Materials

Nominal Designation	Forgings	Castings	Plates
47Ni–22Cr–19Fe–6Mo	B 581 Gr. N06007 (1), (2)		B 582 Gr. N06007 (1)
40Ni–29Cr–15Fe–5Mo	B 462 Gr. N06030 (1), (3)		B 582 Gr. N06030 (1), (3)

	Working Pressures by Classes, bar						
Class Temp., °C	150	300	400	600	900	1500	2500
–29 to 38	19.0	49.6	66.2	99.3	148.9	248.2	413.7
50	18.6	48.6	64.7	97.1	145.7	242.8	404.6
100	17.0	44.3	59.0	88.6	132.8	221.4	369.0
150	15.8	41.3	55.1	82.6	124.0	206.6	344.3
200	13.8	39.1	52.1	78.2	117.3	195.4	325.7
250	12.1	37.4	49.9	74.8	112.2	187.0	311.6
300	10.2	36.1	48.2	72.2	108.3	180.6	300.9
325	9.3	35.6	47.4	71.1	106.7	177.9	296.4
350	8.4	35.2	46.9	70.3	105.5	175.8	293.1
375	7.4	34.9	46.5	69.7	104.6	174.3	290.6
400	6.5	34.6	46.1	69.2	103.7	172.9	288.1
425	5.5	34.4	45.9	68.9	103.3	172.1	286.9
450	4.6	33.7	45.1	67.7	101.4	169.0	281.8
475	3.7	31.7	42.3	63.4	95.1	158.2	263.9
500	2.8	28.2	37.6	56.5	84.7	140.9	235.0
538	1.4	25.2	33.4	50.0	75.2	125.5	208.9

NOTES:

(1) Use solution annealed material only.

(2) The chemical composition, mechanical properties, heat treating requirements, and grain size requirements shall conform to the applicable ASTM specification. The manufacturing procedures, tolerances, tests, certification, and markings shall be in accordance with ASTM B 564.

(3) Not to be used over 425°C.

Copyright ASME International
Provided by IHS under license with ASME
No reproduction or networking permitted without license from IHS Not for Resale

Table 2-3.15 Pressure–Temperature Ratings for Group 3.15 Materials

Nominal Designation	Forgings	Castings	Plates
33Ni–42Fe–21Cr	B 564 Gr. N08810 (1)		B 409 Gr. N08810 (1)

	Working Pressures by Classes, bar						
Class Temp., °C	150	300	400	600	900	1500	2500
–29 to 38	15.9	41.4	55.2	82.7	124.1	206.8	344.7
50	15.6	40.6	54.2	81.3	121.9	203.2	338.7
100	14.5	37.8	50.4	75.6	113.4	189.0	315.0
150	13.7	35.9	47.8	71.7	107.6	179.3	298.9
200	13.0	33.9	45.2	67.9	101.8	169.6	282.7
250	12.1	32.3	43.0	64.5	96.8	161.3	268.9
300	10.2	30.7	41.0	61.5	92.2	153.7	256.2
325	9.3	30.1	40.1	60.1	90.2	150.3	250.5
350	8.4	29.4	39.2	58.8	88.3	147.1	245.2
375	7.4	28.7	38.3	57.4	86.2	143.6	239.4
400	6.5	28.3	37.7	56.5	84.8	141.3	235.6
425	5.5	27.7	36.9	55.3	83.0	138.4	230.6
450	4.6	27.2	36.3	54.4	81.7	136.1	226.8
475	3.7	26.8	35.7	53.5	80.3	133.9	223.1
500	2.8	26.3	35.1	52.6	79.0	131.6	219.4
538	1.4	25.2	33.4	50.0	75.2	125.5	208.9
550	...	25.0	33.3	49.8	74.8	124.9	208.0
575	...	24.0	31.9	47.9	71.8	119.7	199.5
600	...	21.6	28.6	42.9	64.2	107.0	178.5
625	...	18.3	24.3	36.6	54.9	91.2	152.0
650	...	14.1	18.9	28.1	42.5	70.7	117.7
675	...	12.4	16.9	25.2	37.6	62.7	104.5
700	...	10.1	13.4	20.0	29.8	49.7	83.0
725	...	7.9	10.5	15.4	23.2	38.6	64.4
750	...	5.9	7.9	11.7	17.6	29.6	49.1
775	...	4.6	6.2	9.0	13.7	22.8	38.0
800	...	3.5	4.8	7.0	10.5	17.4	29.2
816	...	2.8	3.8	5.9	8.6	14.1	23.8

NOTE:
(1) Use solution annealed material only.

Copyright ASME International
Provided by IHS under license with ASME
No reproduction or networking permitted without license from IHS
Not for Resale

Table 2-3.16 Pressure–Temperature Ratings for Group 3.16 Materials

Nominal Designation	Forgings	Castings	Plates
35Ni–19Cr–1¼Si	B 511 Gr. N08330 (1), (2)		B 536 Gr. N08330 (1)

	Working Pressures by Classes, bar						
Class Temp., °C	150	300	400	600	900	1500	2500
–29 to 38	19.0	49.6	66.2	99.3	148.9	248.2	413.7
50	18.5	48.4	64.5	96.7	145.1	241.8	403.1
100	16.7	43.5	58.0	87.0	130.5	217.5	362.4
150	15.6	40.8	54.4	81.6	122.5	204.1	340.2
200	13.8	38.6	51.5	77.2	115.8	192.9	321.6
250	12.1	36.8	49.0	73.5	110.3	183.8	306.3
300	10.2	35.2	47.0	70.4	105.6	176.1	293.4
325	9.3	34.5	46.0	69.0	103.6	172.6	287.7
350	8.4	33.9	45.2	67.8	101.7	169.4	282.4
375	7.4	33.2	44.2	66.3	99.5	165.8	276.4
400	6.5	32.6	43.4	65.1	97.7	162.9	271.4
425	5.5	32.0	42.6	64.0	95.9	159.9	266.5
450	4.6	31.4	41.8	62.8	94.1	156.9	261.5
475	3.7	30.8	41.0	61.6	92.4	153.9	256.5
500	2.8	28.2	37.6	56.5	84.7	140.9	235.0
538	1.4	25.2	33.4	50.0	75.2	125.5	208.9
550	...	25.0	33.3	49.8	74.8	124.9	208.0
575	...	21.9	29.2	43.7	65.6	109.4	182.3
600	...	17.4	23.2	34.8	52.3	87.1	145.1
625	...	13.8	18.3	27.5	41.3	68.8	114.6
650	...	11.0	14.7	22.1	33.1	55.1	91.9
675	...	9.1	12.1	18.2	27.3	45.6	75.9
700	...	7.6	10.1	15.2	22.8	38.0	63.3
725	...	6.1	8.1	12.2	18.3	30.5	50.9
750	...	4.8	6.4	9.5	14.3	23.8	39.7
775	...	3.9	5.2	7.7	11.6	19.4	32.3
800	...	3.1	4.2	6.3	9.4	15.6	26.1
816	...	2.6	3.5	5.2	7.8	13.0	21.7

NOTES:

(1) Use solution annealed material only.

(2) The chemical composition, mechanical properties, heat treating requirements, and grain size requirements shall conform to the applicable ASTM specification. The manufacturing procedures, tolerances, tests, certification, and markings shall be in accordance with ASTM B 564.

Copyright ASME International
Provided by IHS under license with ASME
No reproduction or networking permitted without license from IHS
Not for Resale

Table 2-3.17 Pressure–Temperature Ratings for Group 3.17 Materials

Nominal Designation			Forgings		Castings		Plates
29Ni–20.5Cr–3.5Cu–2.5Mo					A 351 Gr. CN7M (1)		
			Working Pressures by Classes, bar				
Class Temp., °C	150	300	400	600	900	1500	2500
–29 to 38	15.9	41.4	55.2	82.7	124.1	206.8	344.7
50	15.4	40.1	53.5	80.3	120.4	200.7	334.4
100	13.5	35.3	47.1	70.6	105.9	176.5	294.2
150	12.3	32.0	42.7	64.1	96.1	160.2	267.0
200	11.3	29.4	39.1	58.7	88.1	146.8	244.7
250	10.4	27.2	36.3	54.4	81.7	136.1	226.9
300	9.7	25.4	33.8	50.8	76.1	126.9	211.5
325	9.3	24.4	32.6	48.8	73.3	122.1	203.5

NOTE:
(1) Use solution annealed material only.

Table 3 Permissible Imperfections in Flange Facing Finish for Raised Face and Large Male and Female Flanges

NPS	Maximum Radial Projection of Imperfections Which Are No Deeper Than the Bottom of the Serrations, mm	Maximum Depth and Radial Projection of Imperfections Which Are Deeper Than the Bottom of the Serrations, mm
1/2	3.0	1.5
3/4	3.0	1.5
1	3.0	1.5
1 1/4	3.0	1.5
1 1/2	3.0	1.5
2	3.0	1.5
2 1/2	3.0	1.5
3	4.5	1.5
3 1/2	6.0	3.0
4	6.0	3.0
5	6.0	3.0
6	6.0	3.0
8	8.0	4.5
10	8.0	4.5
12	8.0	4.5
14	8.0	4.5
16	10.0	4.5
18	12.0	6.0
20	12.0	6.0
24	12.0	6.0

GENERAL NOTE: For permissible imperfections in inch units, refer to Annex F, Table F3.

Copyright ASME International
Provided by IHS under license with ASME
No reproduction or networking permitted without license from IHS Not for Resale

Copyright ASME International
Provided by IHS under license with ASME
No reproduction or networking permitted without license from IHS

Table 4 Dimensions of Facings (Other Than Ring Joints, All Pressure Rating Classes)

1	2	3	4	5	6	7	8	9	10	11	12	13	14	15	1
	Outside Diameter					Outside Diameter				Height			Minimum Outside Diameter of Raised Portion [Notes (2), (3)]		
Nominal Size, NPS	Raised Face Large Male and Large Tongue, *R*	Small Male, *S* [Note (1)]	Small Tongue, *T*	Inside Diameter of Large and Small Tongue, *U*	Inside Diameter of Small Tongue [Note (1)]	Large Female and Large Groove, *W*	Small Female, *X* [Note (1)]	Small Groove, *Y*	Inside Diameter of Large and Small Groove, *Z*	Raised Face [Notes (4), (5)]	Large and Small Male and Tongue [Notes (4), (6)]	Depth of Groove or Female [Notes (1), (7)]	Small Female and Groove, *K*	Large Female and Groove, *L*	Nominal Size, NPS
1/2	34.9	18.3	35.1	25.4	...	36.5	19.9	36.5	23.8	...	...	...	44	46	1/2
3/4	42.9	23.8	42.9	33.3	...	44.4	25.4	44.4	31.8	...	...	...	52	54	3/4
1	50.8	30.2	47.8	38.1	...	52.4	31.8	49.2	36.5	...	...	...	57	62	1
1 1/4	63.5	38.1	57.2	47.6	...	65.1	39.7	58.7	46.0	...	...	...	67	75	1 1/4
1 1/2	73.0	44.4	63.5	54.0	...	74.6	46.0	65.1	52.4	...	...	...	73	84	1 1/2
2	92.1	57.2	82.6	73.0	...	93.7	58.8	84.1	71.4	...	...	...	92	103	2
2 1/2	104.8	68.3	95.2	85.7	...	106.4	69.8	96.8	84.1	...	...	...	105	116	2 1/2
3	127.0	84.1	117.5	108.0	...	128.6	85.7	119.1	106.4	...	...	...	127	138	3
3 1/2	139.7	96.8	130.2	120.6	...	141.3	98.4	131.8	119.1	...	...	...	140	151	3 1/2
4	157.2	109.5	144.5	131.8	...	158.8	111.1	146.0	130.2	...	...	...	157	168	4
5	185.7	136.5	173.0	160.3	...	187.3	138.1	174.6	158.8	...	...	...	186	197	5
6	215.9	161.9	203.2	190.5	...	217.5	163.5	204.8	188.9	...	...	...	216	227	6
8	269.9	212.7	254.0	238.1	...	271.5	214.3	255.6	236.5	...	...	...	270	281	8
10	323.8	266.7	304.8	285.8	...	325.4	268.3	306.4	284.2	...	...	...	324	335	10
12	381.0	317.5	362.0	342.9	...	382.6	319.1	363.5	341.3				381	392	12
14	412.8	349.2	393.7	374.6	...	414.3	350.8	395.3	373.1	...	...	...	413	424	14
16	469.9	400.0	447.5	425.4	...	471.5	401.6	449.3	423.9				470	481	16
18	533.4	450.8	511.2	489.0	...	535.0	452.4	512.8	487.4	...	...	...	533	544	18
20	584.2	501.6	558.8	533.4	...	585.8	503.2	560.4	531.8				584	595	20
24	692.2	603.2	666.8	641.4	...	693.7	604.8	668.3	639.8	...	...	...	692	703	24

Not for Resale

Notes to Table 4

GENERAL NOTES:

(a) Dimensions are in milimeters. For dimensions in inch units, refer to Table F4 of Annex F.
(b) For facing requirements for flanges and flanged fittings, see paras. 6.3 and 6.4 and Fig. 7.
(c) For facing requirements for lapped joints, see para. 6.4.3 and Fig. 7.
(d) For facing tolerances, see para. 7.3.

NOTES:

(1) For small male and female joints, care should be taken in the use of these dimensions to insure that the inside diameter of fitting or pipe is small enough to permit sufficient bearing surface to prevent the crushing of the gasket. This applies particularly on lines where the joint is made on the end of the pipe. Inside diameter of fitting should match inside diameter of pipe as specified by purchaser. Threaded companion flanges for small male and female joints are furnished with plain face and are threaded with American National Standard Locknut Thread (NPSL).
(2) Raised portion of full face may be furnished unless otherwise specified on order.
(3) Large male and female faces and large tongue and groove are not applicable to Class 150 because of potential dimensional conflicts.
(4) See para. 6.4.3 and Fig. 7 for thickness and outside diameters of laps.
(5) Height of raised face is either 2 mm or 7 mm. See para. 6.4.1.
(6) Height of large and small male and tongue is 7 mm.
(7) Depth of groove or female is 5 mm.

--`,,```,,,,````-`-`,,`,,`,`,,`---

Copyright ASME International
Provided by IHS under license with ASME
No reproduction or networking permitted without license from IHS Not for Resale

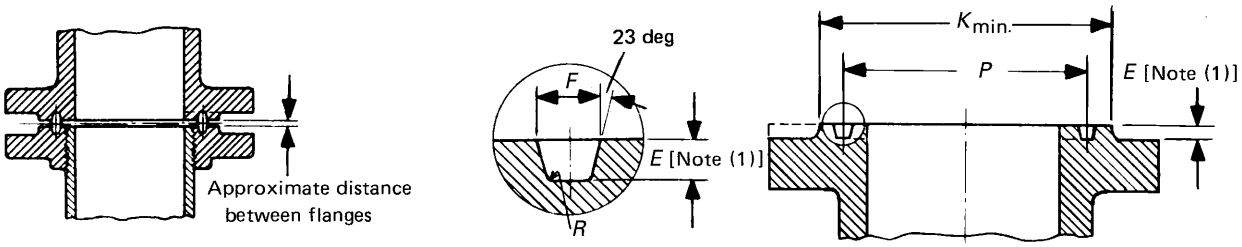

Table 5 Dimensions of Ring-Joint Facings (All Pressure Rating Classes)

1	2	3	4	5	6	7	8	9	10	11	12
Nominal Size								Groove Dimensions			
Class 150 NPS	Class 300 NPS	Class 400 NPS	Class 600 NPS	Class 900 NPS	Class 1500 NPS	Class 2500 NPS	Groove Number	Pitch Diameter, *P*	Depth, *E* [Note (1)]	Width, *F*	Radius at Bottom, *R*
...	1/2	...	1/2	...	...	...	R11	34.14	5.54	7.14	0.8
...	...	...	...	...	1/2	...	12	39.67	6.35	8.74	0.8
...	3/4	...	3/4	...	...	1/2	13	42.88	6.35	8.74	0.8
...	...	...	...	...	3/4	...	14	44.45	6.35	8.74	0.8
1	...	...	...	...	...	...	15	47.63	6.35	8.74	0.8
...	1	...	1	...	1	3/4	16	50.80	6.35	8.74	0.8
1 1/4	...	...	...	...	...	...	17	57.15	6.35	8.74	0.8
...	1 1/4	...	1 1/4	...	1 1/4	1	18	60.33	6.35	8.74	0.8
1 1/2	...	...	...	...	...	...	19	65.07	6.35	8.74	0.8
...	1 1/2	...	1 1/2	...	1 1/2	...	20	68.27	6.35	8.74	0.8
...	...	...	...	...	...	1 1/4	21	72.23	7.92	11.91	0.8
2	...	...	...	...	...	...	22	82.55	6.35	8.74	0.8
...	2	...	2	...	...	1 1/2	23	82.55	7.92	11.91	0.8
...	...	...	...	...	2	...	24	95.25	7.92	11.91	0.8
2 1/2	...	...	...	...	...	...	25	101.60	6.35	8.74	0.8
...	2 1/2	...	2 1/2	...	...	2	26	101.60	7.92	11.91	0.8
...	...	...	...	...	2 1/2	...	27	107.95	7.92	11.91	0.8
...	...	...	...	...	...	2 1/2	28	111.13	9.52	13.49	0.8
3	...	...	...	...	...	...	29	114.30	6.35	8.74	0.8
...	(2)	...	(2)	...	...	...	30	117.48	7.92	11.91	0.8
...	3 (2)	...	3 (2)	3	...	...	31	123.83	7.92	11.91	0.8
...	...	...	...	...	...	3	32	127.00	9.53	13.49	1.5
3 1/2	...	...	...	...	...	...	33	131.78	6.35	8.74	0.8
...	3 1/2	...	3 1/2	...	...	...	34	131.78	7.92	11.91	0.8
...	...	...	...	...	3	...	35	136.53	7.92	11.91	0.8
4	...	...	...	...	...	...	36	149.23	6.35	8.74	0.8
...	4	4	4	4	...	...	37	149.23	7.92	11.91	0.8
...	...	...	...	...	...	4	38	157.18	11.13	16.66	1.5
...	...	...	...	...	4	...	39	161.93	7.92	11.91	0.8
5	...	...	...	...	...	...	40	171.45	6.35	8.74	0.8
...	5	5	5	5	...	...	41	180.98	7.92	11.91	0.8
...	...	...	...	...	...	5	42	190.50	12.70	19.84	1.5
6	...	...	...	...	...	...	43	193.68	6.35	8.74	0.8
...	...	...	...	...	5	...	44	193.68	7.92	11.91	0.8
...	6	6	6	6	...	...	45	211.12	7.92	11.91	0.8
...	...	...	...	...	6	...	46	211.14	9.53	13.49	1.5
...	...	...	...	...	...	6	47	228.60	12.70	19.84	1.5
8	...	...	...	...	...	...	48	247.65	6.35	8.74	0.8
...	8	8	8	8	...	...	49	269.88	7.92	11.91	0.8

Copyright ASME International
Provided by IHS under license with ASME
No reproduction or networking permitted without license from IHS
Not for Resale

Table 5 Dimensions of Ring-Joint Facings (All Pressure Rating Classes) (Cont'd)

13	14	15	16	17	18	19	20	21	22	23	24
Diameter of Raised Portion, *K*					Approximate Distance Between Flanges						
Class 150	Class 300 400 600	Class 900	Class 1500	Class 2500	Class 150	Class 300	Class 400	Class 600	Class 900	Class 1500	Class 2500
...	51.0	...	...	...	...	3	...	3	...	...	...
...	...	...	60.5	...	...	...	...	...	...	4	...
...	63.5	...	...	65.0	...	4	...	4	...	...	4
...	...	...	66.5	...	...	...	...	...	...	4	...
63.5	...	...	...	...	4	...	...	...	...	...	...
...	70.0	...	71.5	73.0	...	4	...	4	...	4	4
73.0	...	...	...	...	4	...	...	...	...	...	...
...	79.5	...	81.0	82.5	...	4	...	4	...	4	4
82.5	...	...	...	...	4	...	...	...	...	...	...
...	90.5	...	92.0	...	...	4	...	4	...	4	...
...	...	...	...	102	...	...	...	...	...	...	3
102	...	...	...	...	4	...	...	...	...	...	...
...	108	...	...	114	...	6	...	5	...	...	3
...	...	...	124	...	...	...	...	...	...	3	...
121	...	...	...	...	4	...	...	...	...	...	...
...	127	...	...	133	...	6	...	5	...	...	3
...	...	...	137	...	...	...	...	...	...	3	...
...	...	...	...	149	...	...	...	...	...	...	3
133	...	...	...	...	4	...	...	...	...	...	...
...	...	...	...	...	...	...	...	...	...	...	...
...	146	156	...	...	...	6	...	5	4	...	...
...	...	...	...	168	...	...	...	...	...	...	3
154	...	...	...	...	4	...	...	...	...	...	...
...	159	...	...	...	...	6	...	5	...	...	...
...	...	...	168	...	...	...	...	...	...	3	...
171	...	...	...	...	4	...	...	...	...	...	...
...	175	181	...	...	...	6	6	5	4	...	...
...	...	...	...	203	...	...	...	...	...	...	4
...	...	...	194	...	...	...	...	...	...	3	...
194	...	...	...	...	4	...	...	...	...	...	...
...	210	216	...	...	...	6	6	5	4	...	...
...	...	...	...	241	...	...	...	...	...	...	4
219	...	...	...	...	4	...	...	...	...	...	...
...	...	...	229	...	...	...	...	...	...	3	...
...	241	241	...	...	...	6	6	5	4	...	...
...	...	...	248	...	...	...	...	...	...	3	...
...	...	...	...	279	...	...	...	...	...	...	4
273	...	...	...	...	4	...	...	...	...	...	...
...	302	308	...	...	...	6	6	5	4	...	...

Copyright ASME International
Provided by IHS under license with ASME
No reproduction or networking permitted without license from IHS Not for Resale

Table 5 Dimensions of Ring-Joint Facings (All Pressure Rating Classes) (Cont'd)

1	2	3	4	5	6	7	8	9	10	11	12
Nominal Size								Groove Dimensions			
Class 150 NPS	Class 300 NPS	Class 400 NPS	Class 600 NPS	Class 900 NPS	Class 1500 NPS	Class 2500 NPS	Groove Number	Pitch Diameter, *P*	Depth, *E*	Width, *F*	Radius at Bottom, *R*
...	...	...	...	...	8	...	50	269.88	11.13	16.66	1.5
...	...	...	...	...	...	8	51	279.40	14.27	23.01	1.5
10	...	...	...	...	...	...	52	304.80	6.35	8.74	0.8
...	10	10	10	10	...	...	53	323.85	7.92	11.91	0.8
...	...	...	...	...	10	...	54	323.85	11.13	16.66	1.5
...	...	...	...	...	...	10	55	342.90	17.48	30.18	2.4
12	...	...	...	...	...	...	56	381.00	6.35	8.74	0.8
...	12	12	12	12	...	...	57	381.00	7.92	11.91	0.8
...	...	...	...	...	12	...	58	381.00	14.27	23.01	1.5
14	...	...	...	...	...	...	59	396.88	6.35	8.74	0.8
...	...	...	...	...	...	12	60	406.40	17.48	33.32	2.4
...	14	14	14	...	...	...	61	419.10	7.92	11.91	0.8
...	...	...	...	14	...	...	62	419.10	11.13	16.66	1.5
...	...	...	...	...	14	...	63	419.10	15.88	26.97	2.4
16	...	...	...	...	...	...	64	454.03	6.35	8.74	0.8
...	16	16	16	...	...	...	65	469.90	7.92	11.91	0.8
...	...	...	...	16	...	...	66	469.90	11.13	16.66	1.5
...	...	...	...	...	16	...	67	469.90	17.48	30.18	2.4
18	...	...	...	...	...	...	68	517.53	6.35	8.74	0.8
...	18	18	18	...	...	...	69	533.40	7.92	11.91	0.8
...	...	...	...	18	...	...	70	533.40	12.70	19.84	1.5
...	...	...	...	...	18	...	71	533.40	17.48	30.18	2.4
20	...	...	...	...	...	...	72	558.80	6.35	8.74	0.8
...	20	20	20	...	...	...	73	584.20	9.53	13.49	1.5
...	...	...	...	20	...	...	74	584.20	12.70	19.84	1.5
...	...	...	...	...	20	...	75	584.20	17.48	33.32	2.4
24	...	...	...	...	...	...	76	673.10	6.35	8.74	0.8
...	24	24	24	...	...	...	77	692.15	11.13	16.66	1.5
...	...	...	...	24	...	...	78	692.15	15.88	26.97	2.4
...	...	...	...	...	24	...	79	692.15	20.62	36.53	2.4

--`,,```,,,,````-`-`,,`,,`,`,,`---

Copyright ASME International
Provided by IHS under license with ASME
No reproduction or networking permitted without license from IHS Not for Resale

Table 5 Dimensions of Ring-Joint Facings (All Pressure Rating Classes) (Cont'd)

13	14	15	16	17	18	19	20	21	22	23	24
Diameter of Raised Portion, *K*					Approximate Distance Between Flanges						
Class 150	Class 300 400 600	Class 900	Class 1500	Class 2500	Class 150	Class 300	Class 400	Class 600	Class 900	Class 1500	Class 2500
...	...	...	318	...	...	...	...	...	...	4	...
...	...	...	...	340	...	...	...	...	...	...	5
330	...	...	...	...	4	...	...	...	...	...	...
...	356	362	...	...	...	6	6	5	4	...	...
...	...	...	371	...	...	...	...	...	...	4	...
...	...	...	...	425	...	...	...	...	...	...	6
406	...	...	...	...	4	...	...	...	...	...	...
...	413	419	...	...	...	6	6	5	4	...	...
...	...	...	438	...	...	...	...	...	...	5	...
425	...	...	...	...	3	...	...	...	...	...	...
...	...	...	...	495	...	...	...	...	...	...	8
...	457	...	...	...	...	6	6	5	...	...	...
...	...	467	...	...	...	...	...	...	4	...	...
...	...	...	489	...	...	...	...	...	...	6	...
483	...	...	...	...	3	...	...	...	...	...	...
...	508	...	...	...	...	6	6	5	...	...	...
...	...	524	...	...	...	...	...	...	4	...	...
...	...	...	546	...	...	...	...	...	...	8	...
546	...	...	...	...	3	...	...	...	...	...	...
...	575	...	...	...	...	6	6	5	...	...	...
...	...	594	...	...	...	...	...	...	5	...	...
...	...	...	613	...	...	...	...	...	...	8	...
597	...	...	...	...	3	...	...	...	...	...	...
...	635	...	...	...	...	6	6	5	...	...	...
...	...	648	...	...	...	...	...	...	5	...	...
...	...	...	673	...	...	...	...	...	...	10	...
711	...	...	...	...	3	...	...	...	...	...	...
...	749	...	...	...	...	6	6	6	...	...	...
...	...	772	...	...	...	...	...	...	6	...	...
...	...	...	794	...	...	...	...	...	...	11	...

GENERAL NOTES:

(a) Dimensions are in millimeters. For dimensions in inch units, refer to Annex F, Table F5.
(b) For facing requirements for flanges and flanged fitting, see para. 6.4.1 and Fig. 7.
(c) For facing requirements for lapped joints, see para. 6.4.3 and Fig. 7.
(d) See para. 4.2.7 for marking requirements.
(e) Use Class 600 sizes NPS $\frac{1}{2}$ to NPS $3\frac{1}{2}$ for Class 400.
(f) Use Class 1500 in sizes NPS $\frac{1}{2}$ to NPS $2\frac{1}{2}$ for Class 900.

NOTES:

(1) Height of raised portion is equal to the depth of groove dimension *E*, but is not subjected to the tolerances for *E*. Former full-face contour may be used.
(2) For ring joints with lapped flanges in Classes 300 and 600, ring and groove number R30 is used instead of R31.

TOLERANCES:

E (depth) +0.4, −0.0
F (width) ±0.2
P (pitch diameter) ±0.13
R (radius at bottom)
$R \leq 2$ +0.8, −0.0
$R > 2$ ±0.8
23 deg (angle) ± $\frac{1}{2}$ deg

Copyright ASME International
Provided by IHS under license with ASME
No reproduction or networking permitted without license from IHS
Not for Resale

REDUCING THREADED AND SLIP-ON PIPE FLANGES

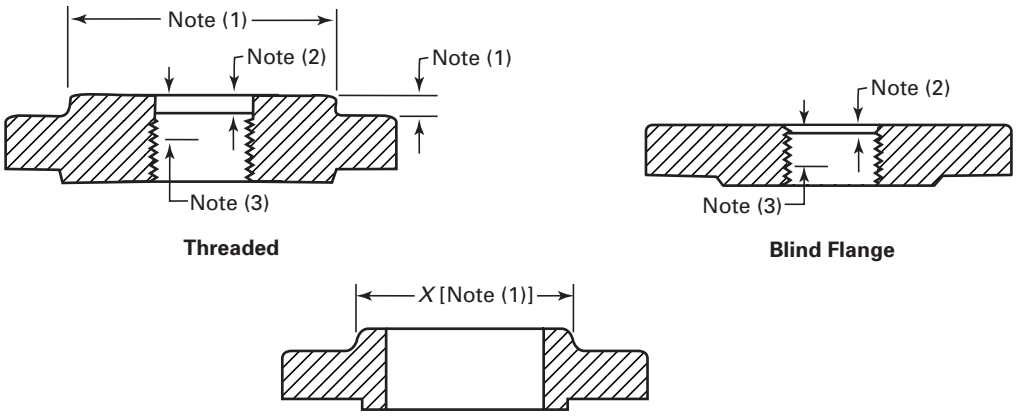

Table 6 Reducing Threaded and Slip-On Flanges for Classes 150 Through 2500

1	2	3	4	5	6
Nominal Pipe Size [Note (4)]	Smallest Size of Reducing Outlet Requiring Hub Flanges [Note (1)]	Nominal Pipe Size [Note (4)]	Smallest Size of Reducing Outlet Requiring Hub Flanges [Note (1)]	Nominal Pipe Size [Note (4)]	Smallest Size of Reducing Outlet Requiring Hub Flanges [Note (1)]
NPS	NPS	NPS	NPS	NPS	NPS
1	$\frac{1}{2}$	$3\frac{1}{2}$	$1\frac{1}{2}$	12	$3\frac{1}{2}$
$1\frac{1}{4}$	$\frac{1}{2}$	4	$1\frac{1}{2}$	14	$3\frac{1}{2}$
$1\frac{1}{2}$	$\frac{1}{2}$	5	$1\frac{1}{2}$	16	4
2	1	6	$2\frac{1}{2}$	18	4
$2\frac{1}{2}$	$1\frac{1}{4}$	8	3	20	4
3	$1\frac{1}{4}$	10	$3\frac{1}{2}$	24	4

GENERAL NOTE: Dimensions are in millimeters. For dimensions in inches, refer to Annex F, Table F6.

NOTES:

(1) The hub dimensions shall be at least as large as those of the standard flanges of the size to which the reduction is being machined, except flanges reducing to a size smaller than those of Columns 2, 4, and 6 may be made from blind flanges. See Example.

(2) Class 150 flanges do not have a counterbore. Class 300 and higher pressure flanges will have depth of counterbore *Q* of 7 mm for NPS 2 and smaller tapping and 9.50 mm for NPS $2\frac{1}{2}$ and larger. The diameter *Q* of counterbore is the same as that given in the tables of threaded flanges for the corresponding tapping.

(3) Minimum length of effective threads shall be at least equal dimension *T* of the corresponding pressure class threaded flange as shown in tables but does not necessarily extend for the face of the flange. For thread of threaded flanges, see para. 6.9.

(4) For method of designating reducing threaded and reducing slip-on flanges, see para. 3.3 and Examples below.

EXAMPLES:

A. The size designation is NPS 6 × $2\frac{1}{2}$ — Class 300 reducing threaded flange. This flange has the following dimensions:

NPS $2\frac{1}{2}$ = taper pipe thread tapping (ASME B1.20.1)
320 mm = diameter of regular NPS 6 Class 300 threaded flange
35 mm = thickness of regular NPS 6 Class 300 threaded flange
178 mm = diameter of hub for regular NPS 5 Class 300 threaded flange. Hub diameter may be one size small to reduce machining. In this example a hub diameter of NPS $2\frac{1}{2}$ would be the smallest acceptable.
15.5 mm = height of hub for regular NPS 5 Class 300 threaded flange.

B. The size designation is NPS 6 × 2 — Class 300 reducing threaded flange. Use regular NPS 6 Class 300 blind flange tapped with NPS 2 taper pipe thread (ASME B1.20.1).

Copyright ASME International
Provided by IHS under license with ASME
No reproduction or networking permitted without license from IHS Not for Resale

CLASS 150 PIPE FLANGES AND FLANGED FITTINGS

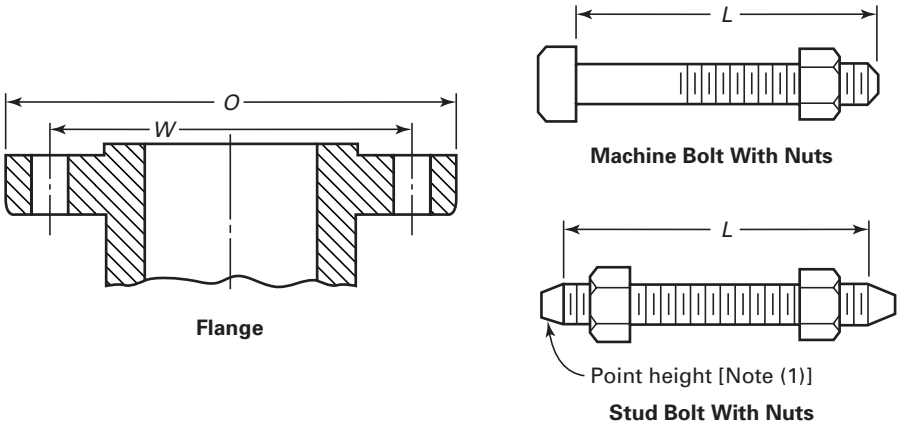

Table 7 Templates for Drilling Class 150 Flanges

1	2	3	4	5	6	7	8	9
		Drilling [Notes (2), (3)]				Length of Bolts, *L* [Notes (1), (4)]		
						Stud Bolts [Note (1)]		Machine Bolts
Nominal Pipe Size, NPS	Outside Diameter of Flange, *O*	Diameter of Bolt Circle, *W*	Diameter of Bolt Holes, in.	Number of Bolts	Diameter of Bolts, in.	2 mm Raised Face	Ring Joint	2 mm Raised Face
1/2	90	60.3	5/8	4	1/2	55	...	50
3/4	100	69.9	5/8	4	1/2	65	...	50
1	110	79.4	5/8	4	1/2	65	75	55
1 1/4	115	88.9	5/8	4	1/2	70	85	55
1 1/2	125	98.4	5/8	4	1/2	70	85	65
2	150	120.7	3/4	4	5/8	85	95	70
2 1/2	180	139.7	3/4	4	5/8	90	100	75
3	190	152.4	3/4	4	5/8	90	100	75
3 1/2	215	177.8	3/4	8	5/8	90	100	75
4	230	190.5	3/4	8	5/8	90	100	75
5	255	215.9	7/8	8	3/4	95	110	85
6	280	241.3	7/8	8	3/4	100	115	85
8	345	298.5	7/8	8	3/4	110	120	90
10	405	362.0	1	12	7/8	115	125	100
12	485	431.8	1	12	7/8	120	135	100
14	535	476.3	1 1/8	12	1	135	145	115
16	595	539.8	1 1/8	16	1	135	145	115
18	635	577.9	1 1/4	16	1 1/8	145	160	125
20	700	635.0	1 1/4	20	1 1/8	160	170	140
24	815	749.3	1 3/8	20	1 1/4	170	185	150

GENERAL NOTES:

(a) Dimensions of Table 7 are in millimeters, except for diameters of bolts and bolt holes, which are in inch units. For dimensions in inch units, refer to Annex F, Table F7.

(b) For other dimensions, see Tables 8 and 9.

NOTES:

(1) Length of stud bolt does not include the height of the points. See para. 6.10.2.

(2) For flange bolt holes, see para. 6.5.

(3) For spot facing, see para. 6.6.

(4) Bolt lengths not shown in table may be determined in accordance with Annex D. See para. 6.10.2.

Copyright ASME International
Provided by IHS under license with ASME
No reproduction or networking permitted without license from IHS
Not for Resale

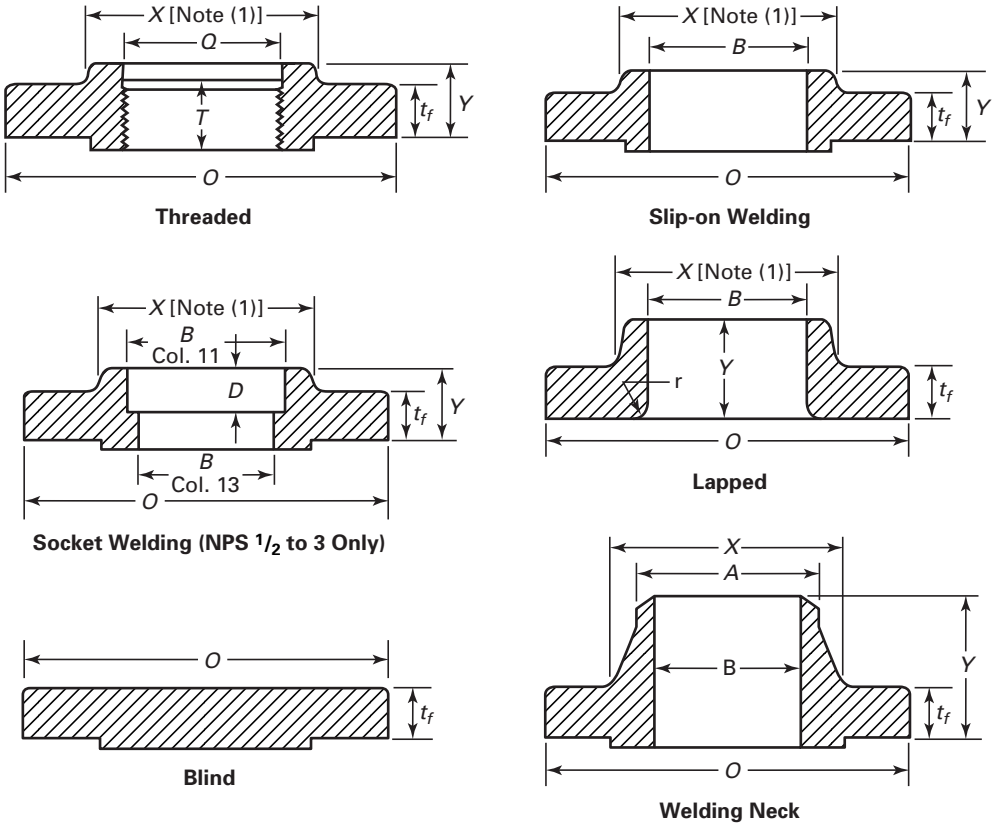

Table 8 Dimensions of Class 150 Flanges

Copyright ASME International
Provided by IHS under license with ASME
No reproduction or networking permitted without license from IHS Not for Resale

Copyright ASME International
Provided by IHS under license with ASME
No reproduction or networking permitted without license from IHS

Table 8 Dimensions of Class 150 Flanges (Cont'd)

1	2	3	4	5	6	7	8	9	10	11	12	13	14	15
						Length Through Hub				Bore				
Nominal Pipe Size NPS	Outside Diameter of Flange, *O*	Thickness of Flange, Min., t_f [Notes (2)-(4)]	Thickness Lap Joint Min., t_f	Diameter of Hub, *X*	Hub Diameter Beginning of Chamfer Welding Neck, *A* [Note (5)]	Threaded/ Slip-on/ Socket Welding, *Y*	Lapped, *Y*	Welding Neck, *Y*	Thread Length Threaded Min., *T* [Note (6)]	Slip-on/ Socket Welding, Min. *B*	Lapped Min., *B*	Welding Neck/ Socket Welding, *B* [Note (7)]	Corner Radius of Bore of Lapped Flange and Pipe, *r*	Depth of Socket, *D*
1/2	90	9.6	11.2	30	21.3	14	16	46	16	22.2	22.9	15.8	3	10
3/4	100	11.2	12.7	38	26.7	14	16	51	16	27.7	28.2	20.9	3	11
1	110	12.7	14.3	49	33.4	16	17	54	17	34.5	34.9	26.6	3	13
1 1/4	115	14.3	15.9	59	42.2	19	21	56	21	43.2	43.7	35.1	5	14
1 1/2	125	15.9	17.5	65	48.3	21	22	60	22	49.5	50.0	40.9	6	16
2	150	17.5	19.1	78	60.3	24	25	62	25	61.9	62.5	52.5	8	17
2 1/2	180	20.7	22.3	90	73.0	27	29	68	29	74.6	75.4	62.7	8	19
3	190	22.3	23.9	108	88.9	29	30	68	30	90.7	91.4	77.9	10	21
3 1/2	215	22.3	23.9	122	101.6	30	32	70	32	103.4	104.1	90.1	10	. . .
4	230	22.3	23.9	135	114.3	32	33	75	33	116.1	116.8	102.3	11	. . .
5	255	22.3	23.9	164	141.3	35	36	87	36	143.8	144.4	128.2	11	. . .
6	280	23.9	25.4	192	168.3	38	40	87	40	170.7	171.4	154.1	13	. . .
8	345	27.0	28.6	246	219.1	43	44	100	44	221.5	222.2	202.7	13	. . .
10	405	28.6	30.2	305	273.0	48	49	100	49	276.2	277.4	254.6	13	. . .
12	485	30.2	31.8	365	323.8	54	56	113	56	327.0	328.2	304.8	13	. . .
14	535	33.4	35.0	400	355.6	56	79	125	57	359.2	360.2	To be	13	. . .
16	595	35.0	36.6	457	406.4	62	87	125	64	410.5	411.2	Specified	13	. . .
18	635	38.1	39.7	505	457.0	67	97	138	68	461.8	462.3	by	13	. . .
20	700	41.3	42.9	559	508.0	71	103	143	73	513.1	514.4	Purchaser	13	. . .
24	815	46.1	47.7	663	610.0	81	111	151	83	616.0	616.0		13	. . .

Not for Resale

Notes to Table 8

GENERAL NOTES:

(a) Dimensions of Table 8 are in millimeters. For dimensions in inches, refer to Table F8 of Annex F.
(b) For tolerance, see para. 7.
(c) For facings, see para. 6.4.
(d) For flange bolt holes, see para 6.5 and Table 7.
(e) For spot facing, see para. 6.6.
(f) For reducing threaded and slip-on flanges, see Table 6.
(g) Blind flanges may be made with or without hubs at the manufacturer's option.
(h) For reducing welding neck flanges, see para. 6.8.

NOTES:

(1) This dimension is for large end of hub, which may be straight or tapered. Taper shall not exceed 7 deg on threaded, slip-on, socket-welding, and lapped flanges. This dimension is defined as the diameter at the intersection between the hub taper and the back face of the flange.
(2) The minimum thickness of these loose flanges, in sizes NPS $3\frac{1}{2}$ and smaller, is slightly greater than the thickness of flanges on fittings, Table 9, which are reinforced by being cast integral with the body of the fitting.
(3) These flanges may be supplied with a flat face. The flat face may be either the full t_f dimension of thickness plus 2 mm, or the t_f dimension thickness without the raised face height. See Para 6.3.2 for additional restrictions.
(4) The flange dimensions illustrated are for regularly furnished 2 mm raised face (except lapped); for requirements of other facings, see Fig. 7.
(5) For welding end bevel. See para. 6.7.
(6) For thread of threaded flanges, see para. 6.9.
(7) Dimensions in Column 13 correspond to the inside diameters of pipe as given in ASME B36.10M for Standard Wall pipe. Thickness of Standard Wall is the same as Schedule 40 in sizes NPS 10 and smaller. Tolerances in para. 7.5.2 apply. These bore sizes are furnished unless otherwise specified by the purchaser.

Copyright ASME International
Provided by IHS under license with ASME
No reproduction or networking permitted without license from IHS Not for Resale

Copyright ASME International
Provided by IHS under license with ASME
No reproduction or networking permitted without license from IHS

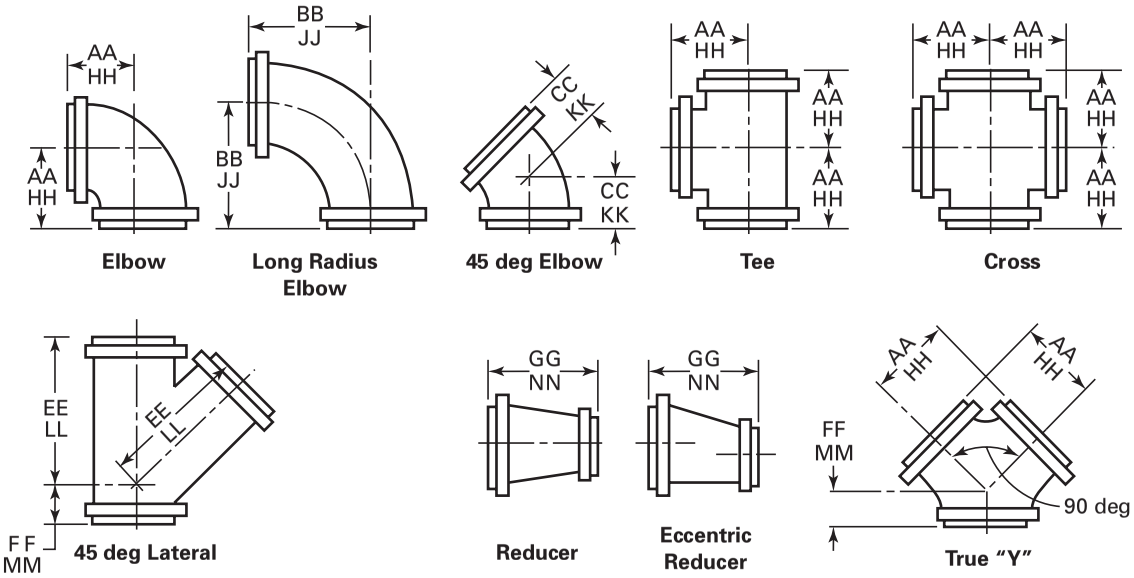

Table 9 Dimensions of Class 150 Flanged Fittings

1	2	3	4	5	6	7	8	9	10	11	12
					2 mm Raised Face [Note (4)]						
Nominal Pipe Size NPS	Outside Diameter of Flange, *O*	Thickness of Flange Min., t_f [Notes (1)–(3)]	Wall Thickness of Fitting, Min., t_m	Inside diameter of Fitting, *d*	Center-to-Contact Surface of Raised Face Elbow, Tee, Cross, and True "Y", AA	Center-to-Contact Surface of Raised Face Long Radius Elbow, BB	Center-to-Contact Surface of Raised Face 45 deg Elbow, CC	Long Center-to-Contact Surface of Raised Face Lateral, EE	Short Center-to-Contact Surface of Raised Face Lateral and True "Y", FF	Contact Surface-to-Contact Surface of Raised Face Reducer, GG [Note (5)]	Ring Joint [Note (4)] Center-to-End Elbow, Tee, Cross, and True "Y", HH [Note (6)]
1/2	90	8.0	2.8	13	...	...	...	...	...	...	...
3/4	100	8.9	3.2	19	...	...	...	...	...	...	...
1	110	9.6	4.0	25	89	127	44	146	44	114	95
1 1/4	115	11.2	4.8	32	95	140	51	159	44	114	102
1 1/2	125	12.7	4.8	38	102	152	57	178	51	114	108
2	150	14.3	5.6	51	114	165	64	203	64	127	121
2 1/2	180	15.9	5.6	64	127	178	76	241	64	140	133
3	190	17.5	5.6	76	140	197	76	254	76	152	146
3 1/2	215	19.1	6.4	89	152	216	89	292	76	165	159
4	230	22.3	6.4	102	165	229	102	305	76	178	171

Not for Resale

Copyright ASME International
Provided by IHS under license with ASME
No reproduction or networking permitted without license from IHS

Table 9 Dimensions of Class 150 Flanged Fittings (Cont'd)

1	2	3	4	5	6	7	8	9	10	11	12
					2 mm Raised Face [Note (4)]						
Nominal Pipe Size NPS	Outside Diameter of Flange, O	Thickness of Flange Min., t_f [Notes (1)–(3)]	Wall Thickness of Fitting, Min., t_m	Inside diameter of Fitting, d	Center-to-Contact Surface of Raised Face Elbow, Tee, Cross, and True "Y", AA	Center-to-Contact Surface of Raised Face Long Radius Elbow, BB	Center-to-Contact Surface of Raised Face 45 deg Elbow, CC	Long Center-to-Contact Surface of Raised Face Lateral, EE	Short Center-to-Contact Surface of Raised Face Lateral and True "Y", FF	Contact Surface-to-Contact Surface of Raised Face Reducer, GG [Note (5)]	Ring Joint [Note (4)] Center-to-End Elbow, Tee, Cross, and True "Y", HH [Note (6)]
5	255	22.3	7.1	127	190	260	114	343	89	203	197
6	280	23.9	7.1	152	203	292	127	368	89	229	210
8	345	27.0	7.9	203	229	356	140	444	114	279	235
10	405	28.6	8.7	254	279	419	165	521	127	305	286
12	485	30.2	9.5	305	305	483	190	622	140	356	311
14	535	33.4	10.3	337	356	546	190	686	152	406	362
16	595	35.0	11.1	387	381	610	203	762	165	457	387
18	635	38.1	11.9	438	419	673	216	813	178	483	425
20	700	41.3	12.7	489	457	737	241	889	203	508	464
24	815	46.1	14.5	591	559	864	279	1029	229	610	565

Not for Resale

Copyright ASME International
Provided by IHS under license with ASME
No reproduction or networking permitted without license from IHS

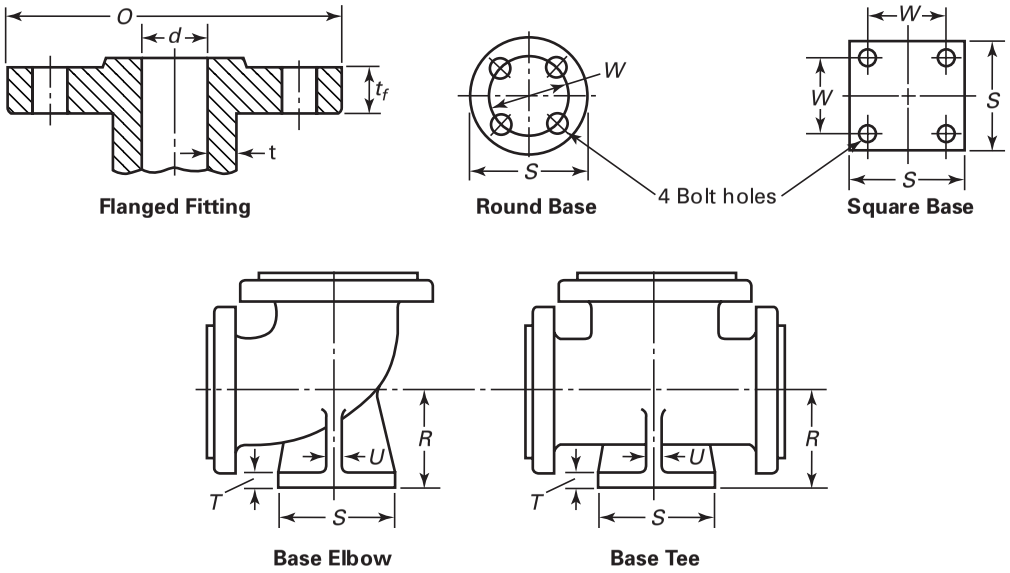

Table 9 Dimensions of Class 150 Flanged Fittings (Cont'd)

13	14	15	16	17	18	19	20	21	22	23	1
Ring Joint [Note (4)]								Base Drilling [Note (11)]			
Center-to-End Long Radius Elbow, JJ [Note (6)]	Center-to-End 45 deg Elbow, KK [Note (6)]	Long Center-to-End Lateral, LL [Note (6)]	Short Center-to-End Lateral And True "Y", MM [Note (6)]	End-to-End Reducer, NN [Notes (5), (6)]	Center-to-Base, *R* [Notes (7)–(9)]	Diameter of Round Base or Width of Square Base, *S* [Note (7)]	Thickness of Base, *T* [Notes (7)–(10)]	Thickness of Ribs, *U* [Note (7)]	Bolt Circle or Bolt Spacing, *W*	Diameter of Drilled Holes	Nominal Pipe Size NPS
...	...	...	...	...	...	...	...	...	...	...	1/2
...	...	...	...	...	...	...	...	...	...	...	3/4
133	51	152	51	...	...	...	...	...	...	...	1
146	57	165	51	...	...	...	...	...	...	...	1 1/4
159	64	184	57	...	...	...	...	...	...	...	1 1/2
171	70	210	70	...	105	117	13	13	88.9	5/8	2
184	83	248	70	...	114	117	13	13	88.9	5/8	2 1/2
203	83	260	70	...	124	127	14	14	98.4	5/8	3
222	95	298	83	...	133	127	14	14	98.4	5/8	3 1/2
235	108	311	83	...	140	152	16	16	120.6	3/4	4

Not for Resale

Copyright ASME International
Provided by IHS under license with ASME
No reproduction or networking permitted without license from IHS

Table 9 Dimensions of Class 150 Flanged Fittings (Cont'd)

13	14	15	16	17	18	19	20	21	22	23	1
Ring Joint [Note (4)]								Base Drilling [Note (11)]			
Center-to-End Long Radius Elbow, JJ [Note (6)]	Center-to-End 45 deg Elbow, KK [Note (6)]	Long Center-to-End Lateral, LL [Note (6)]	Short Center-to-End Lateral And True "Y", MM [Note (6)]	End-to-End Reducer, NN [Notes (5), (6)]	Center-to-Base, *R* [Notes (7)–(9)]	Diameter of Round Base or Width of Square Base, *S* [Note (7)]	Thickness of Base, *T* [Notes (7)–(10)]	Thickness of Ribs, *U* [Note (7)]	Bolt Circle or Bolt Spacing, *W*	Diameter of Drilled Holes	Nominal Pipe Size NPS
267	121	349	95	...	159	178	17	17	139.7	3/4	5
298	133	375	95	...	178	178	17	17	139.7	3/4	6
362	146	451	121	...	213	229	24	24	190.5	3/4	8
425	171	527	133	...	248	229	24	24	190.5	3/4	10
489	197	629	146	...	286	279	25	25	241.3	7/8	12
552	197	692	159	...	318	279	25	25	241.3	7/8	14
616	210	768	171	...	349	279	25	25	241.3	7/8	16
679	222	819	184	...	381	343	29	29	298.4	7/8	18
743	248	895	210	...	406	343	29	29	298.4	7/8	20
870	286	1035	235	...	470	343	29	29	298.4	7/8	24

Not for Resale

Notes to Table 9

GENERAL NOTES:

(a) Dimensions of Table 9 are in millimeters. For dimensions in inch units, refer to Annex F, Table F9.
(b) For tolerances, see para. 7.
(c) For facings, see para. 6.4.
(d) For flange bolt holes, see para. 6.5 and Table 8.
(e) For spot facing, see para. 6.6.
(f) For intersecting centerlines, center-to-contact surface, and center-to-end dimensions of side outlet fittings, see para. 6.2.4.
(g) For center-to-contact surface and center-to-end dimensions of special degree elbows, see para. 6.2.5.
(h) For reinforcement of certain fittings, see para. 6.1.
(i) For drains, see para. 6.12.

NOTES:

(1) The thickness of flange minimum dimensions for loose flanges, Table 9 sizes NPS $3\frac{1}{2}$ and smaller, are slightly heavier than for flanges on these fittings, which are reinforced by being cast integral with the body of fitting.
(2) These fittings may be supplied with a flat face flange. The flat face may be either the full t_f, dimension thickness plus 2 mm or the t_f dimension thickness without the raised face height. See para. 6.3.2 for additional restrictions.
(3) The thickness of flange dimension illustrated is for regularly furnished 2 mm raised face (except lapped); for thickness requirements of other facings, see Fig. 7.
(4) For center-to-contact surface and center-to-end dimensioins of reducing fittings, see para. 6.2.3.
(5) For contact surface-to-contact surface and end-to-end dimensions of reducers and eccentric reducers, see para. 6.2.3.
(6) These dimensions apply to straight sizes only. See paras. 6.2.3 and 6.4.2.2. For center-to-end dimensions of reducing fittings or end-to-end dimensions of reducers, use center-to-contact surface or contact surface-to-contact surface dimensions of 2 mm raised face (flange edge) for largest opening and add the proper height to provide for ring joint groove applying to each flange. See Table 5 for ring joint facing dimensions.
(7) The base dimensions apply to all straight and reducing sizes.
(8) For reducing fittings, the size and center-to-face dimension of base are determined by the size of the largest opening of fittings. In the case of reducing base elbows, orders shall specify whether the base shall be opposite the larger or smaller opening.
(9) Bases shall be plain faced unless otherwise specified, and the center-to-base dimension *R* shall be the finished dimension.
(10) Bases may be cast integral or attached as weldments at the option of the manufacturer.
(11) The bases of these fittings are intended for support in compression and are not to be used for anchors or supports in tension or shear.

Copyright ASME International
Provided by IHS under license with ASME
No reproduction or networking permitted without license from IHS Not for Resale

CLASS 300 PIPE FLANGES, AND FLANGED FITTINGS

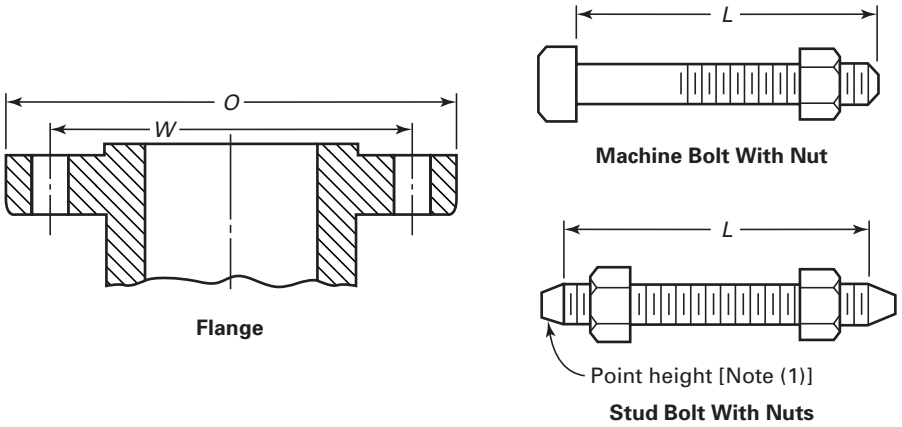

Table 10 Templates for Drilling Class 300 Flanges

1	2	3	4	5	6	7	8	9
		Drilling [Notes (2), (3)]				Length of Bolts, *L* [Notes (1), (4)]		
						Stud Bolts [Note (1)]		Machine Bolts
Nominal Pipe Size, NPS	Outside Diameter of Flange, *O*	Diameter of Bolt Circle, *W*	Diameter of Bolt Holes, in.	Number of Bolts	Diameter of Bolts, in.	2 mm Raised Face	Ring Joint	2 mm Raised Face
1/2	95	66.7	5/8	4	1/2	65	75	55
3/4	115	82.6	3/4	4	5/8	75	90	65
1	125	88.9	3/4	4	5/8	75	90	65
1 1/4	135	98.4	3/4	4	5/8	85	95	70
1 1/2	155	114.3	7/8	4	3/4	90	100	75
2	165	127.0	3/4	8	5/8	90	100	75
2 1/2	190	149.2	7/8	8	3/4	100	115	85
3	210	168.3	7/8	8	3/4	110	120	90
3 1/2	230	184.2	7/8	8	3/4	110	125	95
4	255	200.0	7/8	8	3/4	115	125	95
5	280	235.0	7/8	8	3/4	120	135	110
6	320	269.9	7/8	12	3/4	120	140	110
8	380	330.2	1	12	7/8	140	150	120
10	445	387.4	1 1/8	16	1	160	170	140
12	520	450.8	1 1/4	16	1 1/8	170	185	145
14	585	514.4	1 1/4	20	1 1/8	180	190	160
16	650	571.5	1 3/8	20	1 1/4	190	205	165
18	710	628.6	1 3/8	24	1 1/4	195	210	170
20	775	685.8	1 3/8	24	1 1/4	205	220	185
24	915	812.8	1 5/8	24	1 1/2	230	255	205

GENERAL NOTES:

(a) Dimensions of Table 10 are in millimeters, except for diameters of bolts and bolt holes, which are in inch units. For dimensions in inch units, refer to Annex F, Table F10.

(b) For other dimensions, see Tables 11 and 12.

NOTES:

(1) Length of stud bolt does not include the height of the points. See para. 6.10.2.

(2) For flange bolt holes, see para. 6.5.

(3) For spot facing, see para 6.6.

(4) Bolt lengths not shown in table may be determined in accordance with Annex D. See para. 6.10.2.

Copyright ASME International
Provided by IHS under license with ASME
No reproduction or networking permitted without license from IHS
Not for Resale

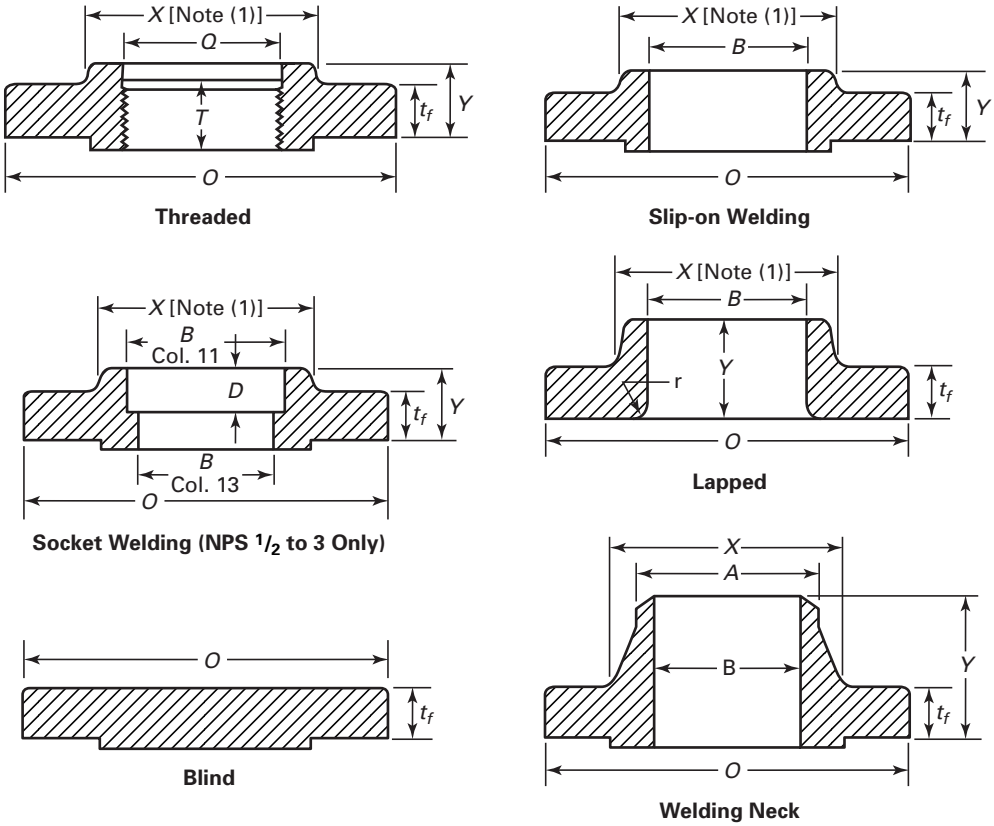

Table 11 Dimensions of Class 300 Flanges

Copyright ASME International
Provided by IHS under license with ASME
No reproduction or networking permitted without license from IHS Not for Resale

Copyright ASME International
Provided by IHS under license with ASME
No reproduction or networking permitted without license from IHS

Table 11 Dimensions of Class 300 Flanges (Cont'd)

1	2	3	4	5	6	7	8	9	10	11	12	13	14	15	16
						Length Through Hub				Bore					
Nominal Pipe Size NPS	Outside Diameter of Flange, *O*	Thickness of Flange Min., t_f [Notes (2), (3)]	Thickness Lap Joint, Min., t_f	Diameter of Hub, *X*	Hub Diameter Beginning of Chamfer Welding, Neck, *A* [Note (4)]	Threaded/ Slip-on/ Socket Welding, *Y*	Lapped, *Y*	Welding Neck, *Y*	Thread Length Threaded Min., *T* [Note (5)]	Slip-on/ Socket Welding Min., *B*	Lapped Min., *B*	Welding Neck/ Socket Welding, *B* [Note (6)]	Corner Radius of Bore of Lapped Flange and Pipe, *r*	Counter-bore Threaded Flange, Min., *Q*	Depth of Socket, *D*
1/2	95	12.7	14.3	38	21.3	21	22	51	16	22.2	22.9	15.8	3	23.6	10
3/4	115	14.3	15.9	48	26.7	24	25	56	16	27.7	28.2	20.9	3	29.0	11
1	125	15.9	17.5	54	33.4	25	27	60	18	34.5	34.9	26.6	3	35.8	13
1 1/4	135	17.5	19.1	64	42.2	25	27	64	21	43.2	43.7	35.1	5	44.4	14
1 1/2	155	19.1	20.7	70	48.3	29	30	67	23	49.5	50.0	40.9	6	50.3	16
2	165	20.7	22.3	84	60.3	32	33	68	29	61.9	62.5	52.5	8	63.5	17
2 1/2	190	23.9	25.4	100	73.0	37	38	75	32	74.6	75.4	62.7	8	76.2	19
3	210	27.0	28.6	117	88.9	41	43	78	32	90.7	91.4	77.9	10	92.2	21
3 1/2	230	28.6	30.2	133	101.6	43	44	79	37	103.4	104.1	90.1	10	104.9	...
4	255	30.2	31.8	146	114.3	46	48	84	37	116.1	116.8	102.3	11	117.6	...
5	280	33.4	35.0	178	141.3	49	51	97	43	143.8	144.4	128.2	11	144.4	...
6	320	35.0	36.6	206	168.3	51	52	97	47	170.7	171.4	154.1	13	171.4	...
8	380	39.7	41.3	260	219.1	60	62	110	51	221.5	222.2	202.7	13	222.2	...
10	445	46.1	47.7	321	273.0	65	95	116	56	276.2	277.4	254.6	13	276.2	...
12	520	49.3	50.8	375	323.8	71	102	129	61	327.0	328.2	304.8	13	328.6	...
14	585	52.4	54.0	425	355.6	75	111	141	64	359.2	360.2	To	13	360.4	...
16	650	55.6	57.2	483	406.4	81	121	144	69	410.5	411.2	be	13	411.2	...
18	710	58.8	60.4	533	457.0	87	130	157	70	461.8	462.3	specified	13	462.0	...
20	775	62.0	63.5	587	508.0	94	140	160	74	513.1	514.4	by	13	512.8	...
24	915	68.3	69.9	702	610.0	105	152	167	83	616.0	616.0	Pur-chaser	13	614.4	...

Not for Resale

Notes to Table 11

GENERAL NOTES:

(a) Dimensions of Table 11 are in millimeters. For dimensions in inch units, refer to Annex F Table, F11.
(b) For tolerances, see para 7.
(c) For facings, see para. 6.4.
(d) For flange bolt holes, see para. 6.5 and Table 10
(e) For spot facing, see para. 6.6.
(f) For reducing threaded and slip-on flanges, see Table 6.
(g) Blind flanges may be made with or without hubs at the manufacturer's option.
(h) For reducing welding neck flanges, see para. 6.8.

NOTES:

(1) This dimension is for large end of hub, which may be straight or tapered. Taper shall not exceed 7 deg on threaded, slip-on, socket-welding, and lapped flanges. This dimension is defined as the diameter at the intersection between the hub taper and the back face of the flange.
(2) These flanges may be supplied with a flat face. The flat face may be either the full t_{ff} dimension thickness plus 2 mm or the t_f dimension thickness without the raised face height. See para. 6.3.2 for additional restrictions.
(3) The flange dimensions illustrated are for regularly furnished 2 mm raised face (except lapped); for requirements of other facings, see Fig. 7.
(4) For welding end bevel, see para. 6.7.
(5) For thread of threaded flanges, see para. 6.9.
(6) Dimensions in Column 12 correspond to the inside diameters of pipe as given in ASME B36.10M for Standard Wall pipe. Standard Wall dimensions are the same as Schedule 40 in sizes NPS 10 and smaller. Tolerances in para. 7.5.2 apply. These bore sizes are furnished unless otherwise specified by the purchaser.

Copyright ASME International
Provided by IHS under license with ASME
No reproduction or networking permitted without license from IHS Not for Resale

Copyright ASME International
Provided by IHS under license with ASME
No reproduction or networking permitted without license from IHS

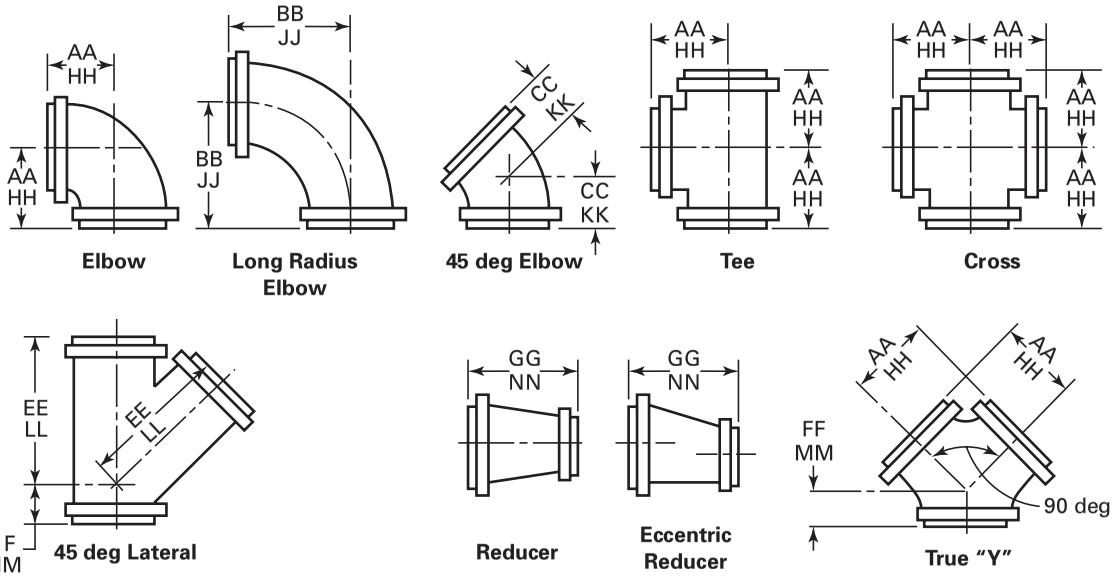

Table 12 Dimensions of Class 300 Flanged Fittings

1	2	3	4	5	6	7	8	9	10	11	12
					2 mm Raised Face (Flange Edge) [Note (4)]						
Nominal Pipe Size, NPS	Outside Diameter of Flange, *O*	Thickness of Flange Min., t_f [Notes (1), (2), (11)]	Wall Thickness of Fitting, Min., t_m	Inside Diameter of Fitting, *d*	Center-to-Contact Surface of Raised Face Elbow, Tee, Cross, and True "Y", AA	Center-to-Contact Surface of Raised Face Long Radius Elbow, BB	Center-to-Contact Surface of Raised Face 45 deg Elbow, CC	Long Center- to-Contact Surface of Raised Face Lateral, EE	Short Center- to-Contact Surface of Raised Face Lateral and True "Y", FF	Contact Surface-to-Contact Surface of Raised Face Reducer, GG [Note (3)]	Ring Joint [Note (2)] Center-to-End Elbow, Tee, Cross, and True "Y", HH [Note (4)]
1	125	15.9	4.8	25	102	127	57	165	51	114	108
1¼	135	17.5	4.8	32	108	140	64	184	57	114	114
1½	155	19.1	4.8	38	114	152	70	216	64	114	121
2	165	20.7	6.4	51	127	165	76	229	64	127	135
2½	190	23.9	6.4	64	140	178	89	267	64	140	148
3	210	27.0	7.1	76	152	197	89	279	76	152	160
3½	230	28.6	7.4	89	165	216	102	318	76	165	173
4	255	30.2	7.9	102	178	229	114	343	76	178	186

Not for Resale

Copyright ASME International
Provided by IHS under license with ASME
No reproduction or networking permitted without license from IHS

Table 12 Dimensions of Class 300 Flanged Fittings (Cont'd)

1	2	3	4	5	6	7	8	9	10	11	12
					2 mm Raised Face (Flange Edge) [Note (4)]						
Nominal Pipe Size, NPS	Outside Diameter of Flange, *O*	Thickness of Flange Min., t_f [Notes (1), (2), (11)]	Wall Thickness of Fitting, Min., t_m	Inside Diameter of Fitting, *d*	Center-to-Contact Surface of Raised Face Elbow, tee, Cross, and True "Y", AA	Center-to-Contact Surface of Raised Face Long Radius Elbow, BB	Center-to-Contact Surface of Raised Face 45 deg Elbow, CC	Long Center- to-Contact Surface of Raised Face Lateral, EE	Short Center- to-Contact Surface of Raised Face Lateral and True "Y", FF	Contact Surface-to-Contact Surface of Raised Face Reducer, GG [Note (3)]	Ring Joint [Note (2)] Center-to-End Elbow Tee, Cross, and True "Y", HH [Note (4)]
5	280	33.4	9.5	127	203	260	127	381	89	203	211
6	320	35.0	9.5	152	216	292	140	445	102	229	224
8	380	39.7	11.1	203	254	356	152	521	127	279	262
10	445	46.1	12.7	254	292	419	178	610	140	305	300
12	520	49.3	14.3	305	330	483	203	698	152	356	338
14	585	52.4	15.9	337	381	546	216	787	165	406	389
16	650	55.6	17.5	387	419	610	241	876	190	457	427
18	710	58.8	19.0	432	457	673	254	952	203	483	465
20	775	62.0	20.6	483	495	737	267	1029	216	508	505
24	915	68.3	23.8	584	572	864	305	1206	254	610	583

Not for Resale

Copyright ASME International
Provided by IHS under license with ASME
No reproduction or networking permitted without license from IHS

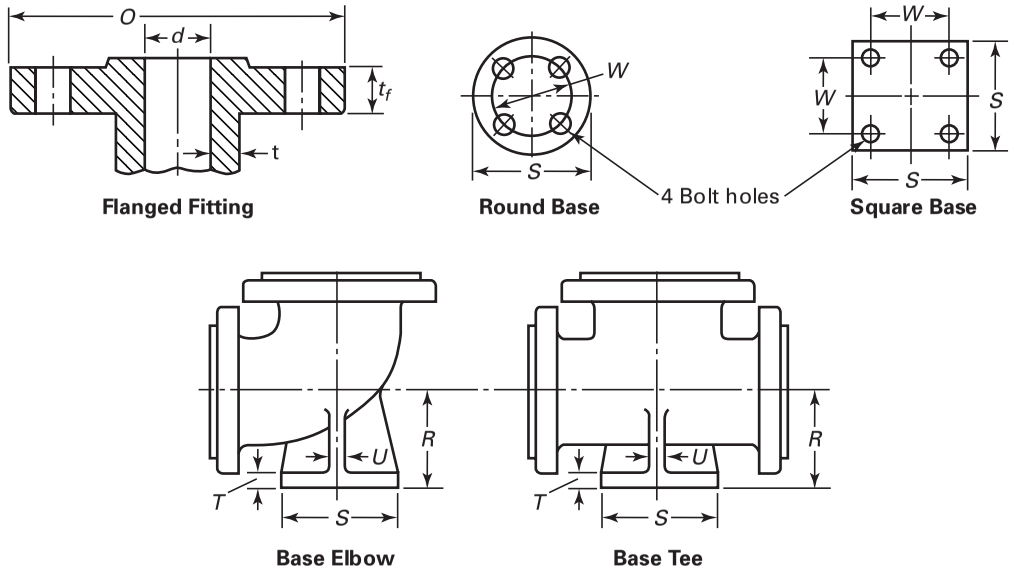

Table 12 Dimensions of Class 300 Flanged Fittings (Cont'd)

13	14	15	16	17	18	19	20	21	22	23	1
Ring Joint [Note (4)]								Base Drilling [Note (10)]			
Center-to-End Long Radius Elbow JJ [Note (5)]	Center-to-End 45 deg Elbow KK [Note (5)]	Long Center-to-End Lateral, LL [Note (5)]	Short Center-to-End Lateral and True "Y", MM [Note (5)]	End-to-End Reducer, NN [Notes (4), (5)]	Center-to-Base, *R* [Notes (6)–(8)]	Diameter of Round Base or Width of Square Base, *S* Note (6)]	Thickness of Base, *T* [Notes (6)–(9)]	Thickness of Ribs, *U* [Note (6)]	Bolt Circle or Bolt Spacing, *W*	Diameter of Drilled Holes	Nominal Pipe Size, NPS
133	64	171	57	...	...	...	...	...	...	...	1
146	70	191	64	...	...	...	...	...	...	...	$1\frac{1}{4}$
159	76	222	70	...	...	...	...	...	...	...	$1\frac{1}{2}$
173	84	237	71	...	114	133	19	13	98.4	$\frac{3}{4}$	2
186	97	275	71	...	121	133	19	13	98.4	$\frac{3}{4}$	$2\frac{1}{2}$
205	97	287	84	...	133	156	21	16	114.3	$\frac{7}{8}$	3
224	110	325	84	...	143	156	21	16	114.3	$\frac{7}{8}$	$3\frac{1}{2}$
237	124	351	84	...	152	165	22	16	127.0	$\frac{3}{4}$	4
268	135	389	97	...	171	190	25	19	149.2	$\frac{7}{8}$	5
300	148	452	110	...	190	190	25	19	149.2	$\frac{7}{8}$	6
364	160	529	135	...	229	254	32	22	200.0	$\frac{7}{8}$	8
427	186	618	148	...	267	254	32	22	200.0	$\frac{7}{8}$	10
491	211	706	160	...	305	318	36	25	269.9	$\frac{7}{8}$	12

Not for Resale

Copyright ASME International
Provided by IHS under license with ASME
No reproduction or networking permitted without license from IHS

Table 12 Dimensions of Class 300 Flanged Fittings (Cont'd)

13	14	15	16	17	18	19	20	21	22	23	1
Ring Joint [Note (4)]								Base Drilling [Note (10)]			
Center-to-End Long Radius Elbow JJ [Note (5)]	Center-to-End 45 deg Elbow KK [Note (5)]	Long Center-to-End Lateral, LL [Note (5)]	Short Center-to-End Lateral and True "Y", MM [Note (5)]	End-to-End Reducer, NN [Notes (4), (5)]	Center-to-Base, *R* [Notes (6)–(8)]	Diameter of Round Base or Width of Square Base, *S* [Note (6)]	Thickness of Base, *T* [Notes (6)–(9)]	Thickness of Ribs, *U* [Note (6)]	Bolt Circle or Bolt Spacing, *W*	Diameter of Drilled Holes	Nominal Pipe Size, NPS
554	224	795	173	...	343	318	36	25	269.9	$\frac{7}{8}$	14
618	249	884	198	...	375	318	36	29	269.9	$\frac{7}{8}$	16
681	262	960	211	...	413	381	41	29	330.2	1	18
746	276	1038	225	...	454	381	41	32	330.2	1	20
875	316	1218	285	...	527	444	48	32	387.4	$1\frac{1}{8}$	24

GENERAL NOTES:

(a) Dimensions of Table 12 are in millimeters. For dimensions in inch units, refer to Annex F, Table F12.
(b) For tolerances, see para. 7.
(c) For facings, see para. 6.4.
(d) For flange bolt holes, see para. 6.5 and Table 8.
(e) For spot facing, see para. 6.6
(f) For intersecting centerlines, center-to-contact surface, and center-to-end dimensions of side outlet fittings, see para. 6.2.4.
(g) For center-to-contact surface and center-to-end dimensions of special degree elbows, see para. 6.2.5.
(h) For reinforcement of certain fittings, see para. 6.1.1.
(i) For drains, see para. 6.12.

NOTES:

(1) These fittings may be supplied with a flat face flange. The flat face may be either the full t_f dimension thickness plus 2 mm or the t_f dimension thickness without the raised face height. See para. 6.3.2 for additional restrictions.
(2) The thickness of flange dimension illustrated is for regularly furnished 2 mm raised face (except lapped); for thickness requirements of other facings, see Fig. 7.
(3) For center-to-contact surface and center-to-end dimensions of reducing fittings, see para. 6.2.3.
(4) For contact surface-to-contact surface and end-to-end dimensions of reducers and eccentric reducers, see para. 6.2.3.
(5) These dimensions apply to straight sizes only. See paras. 6.2.3 and 6.4.2.2. For center-to-end dimensions of reducing fittings or end-to-end dimensions of reducers, use center-to-contact surface or contact surface-to-contact surface dimensions of 2 mm raised face (flange edge) for largest opening and add the proper height to provide for ring joint groove applying to each flange. See Table 5 for ring joint facing dimensions.
(6) The base dimensions apply to all straight and reducing sizes.
(7) For reducing fittings, the size and center-to-face dimension of base are determined by the size of the largest opening of fittings. In the case of reducing base elbows, orders shall specify whether the base shall be opposite the larger or smaller opening.
(8) Bases shall be plain faced unless otherwise specified, and the center-to-base dimension *R* shall be the finished dimension.
(9) Bases may be cast integral or attached as weldments at the option of the manufacturer.
(10) The bases of these fittings are intended for support in compression and are not to be used for anchors or supports in tension or shear.
(11) The thickness of flange minimum dimensions for loose flanges, Table 9, size NPS $3\frac{1}{2}$ and smaller, are slightly heavier than for flanges on these fittings which are reinforced by being cast integral with the body of fitting.

Not for Resale

CLASS 400 PIPE FLANGES

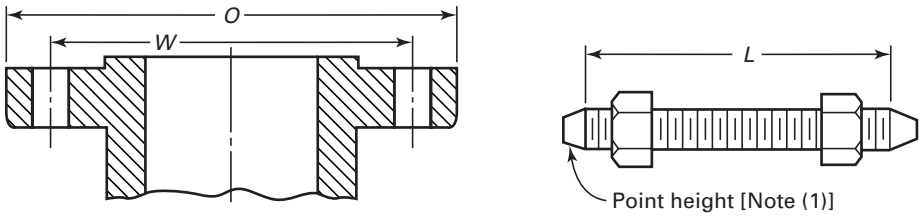

Flange Stud Bolt With Nuts

Table 13 Templates for Drilling Class 400 Flanges

1	2	3	4	5	6	7	8	9
		Drilling [Notes (2), (3)]				Length of Bolts, *L* [Notes (1), (4)]		
Nominal Pipe Size NPS	Outside Diameter of Flange, *O*	Diameter of Bolt Circle, *W*	Diameter of Bolt Holes in.	Number of Bolts	Diameter of Bolts in.	7 mm Raised Face	Male and Female/ Tongue and Groove	Ring Joint
1/2 3/4 1 1 1/4 1 1/2 2 2 1/2 3 3 1/2	Use Class 600 Dimensions in these sizes							
4	255	200.0	1	8	7/8	140	135	140
5	280	235.0	1	8	7/8	145	135	145
6	320	269.9	1	12	7/8	150	145	150
8	380	330.0	1 1/8	12	1	170	165	170
10	445	387.4	1 1/4	16	1 1/8	190	185	190
12	520	450.8	1 3/8	16	1 1/4	205	195	205
14	585	514.4	1 3/8	20	1 1/4	210	205	210
16	650	571.5	1 1/2	20	1 3/8	220	215	220
18	710	628.6	1 1/2	24	1 3/8	230	220	230
20	775	685.8	1 5/8	24	1 1/2	240	235	250
24	915	812.8	1 7/8	24	1 3/4	265	260	280

GENERAL NOTES:

(a) Dimensions of Table 13 are in milimeters, except for diameter of bolts and bolt holes, which are in inch units. For dimensions in inch units refer to Annex F, Table F13.

(b) For other dimensions, see Table 14.

NOTES:

(1) Length of stud bolt does not include the height of the points. See para. 6.10.2.

(2) For flange bolt holes, see para. 6.5.

(3) For spot facing, see para. 6.6.

(4) Bolt lengths not shown in table may be determined in accordance with Annex D. See, para. 6.10.2.

Copyright ASME International
Provided by IHS under license with ASME
No reproduction or networking permitted without license from IHS
Not for Resale

Copyright ASME International
Provided by IHS under license with ASME
No reproduction or networking permitted without license from IHS

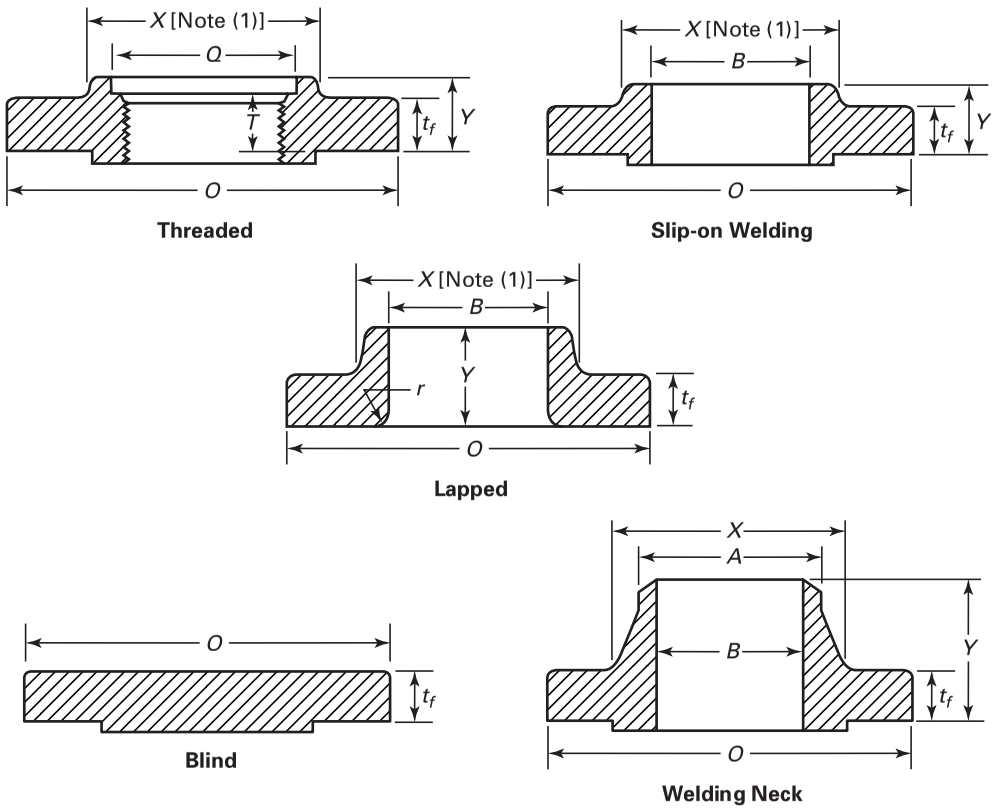

Table 14 Dimensions of Class 400 Flanges

1	2	3	4	5	6	7	8	9	10	11	12	13	14
					Length Through Hub				Bore				
Nominal Pipe Size NPS	Outside Diameter of Flange, *O*	Thickness of Flange Min., t_f	Diameter of Hub, *X*	Hub Diameter Beginning of Chamfer Welding Neck, *A* [Note (2)]	Threaded/ Slip-on, *Y*	Lapped, *Y*	Welding Neck, *Y*	Thread Length Threaded Flange Min., *T* [Note (3)]	Slip-on Min., *B*	Lapped Min., *B*	Welding Neck, *B*	Corner Radius of Bore of Lapped Flange and Pipe, *r*	Counterbore Threaded Flange Min., *Q*
1/2 3/4 1 1 1/4 1 1/2	Use Class 600 Dimensions in these sizes [Note (4)].												

Not for Resale

Copyright ASME International
Provided by IHS under license with ASME
No reproduction or networking permitted without license from IHS

Table 14 Dimensions of Class 400 Flanges (Cont'd)

1	2	3	4	5	6	7	8	9	10	11	12	13	14
				Hub Diameter Beginning of Chamfer Welding	Length Through Hub			Thread Length Threaded Flange	Bore			Corner Radius of Bore of Lapped Flange	
Nominal Pipe Size NPS	Outside Diameter of Flange, *O*	Thickness of Flange Min., t_f	Diameter of Hub, *X*	Neck, *A* [Note (2)]	Threaded/ Slip-on, *Y*	Lapped, *Y*	Welding Neck, *Y*	Min., *T* [Note (3)]	Slip-on Min., *B*	Lapped Min., *B*	Welding Neck, *B*	and Pipe, *r*	Counterbore Threaded Flange Min., *Q*
2 2½ 3 3½	Use Class 600 Dimensions in these sizes [Note (4)].												
4	255	35.0	146	114.3	51	51	89	37	116.1	116.8	To be	11	117.6
5	280	38.1	178	141.3	54	54	102	43	143.8	144.5	specified	11	144.4
6	320	41.3	206	168.3	57	57	103	46	170.7	171.4	by	13	171.4
8	380	47.7	260	219.1	68	68	117	51	221.5	222.2	purchaser	13	222.2
10	445	54.0	321	273.0	73	102	124	56	276.2	277.4		13	276.2
12	520	57.2	375	323.8	79	108	137	61	327.0	328.2		13	328.6
14	585	60.4	425	355.6	84	117	149	64	359.2	360.2		13	360.4
16	650	63.5	483	406.4	94	127	152	69	410.5	411.2		13	411.2
18	710	66.7	533	457.0	98	137	165	70	461.8	462.3		13	462.0
20	775	69.9	587	508.0	102	146	168	74	513.1	514.4		13	512.8
24	915	76.2	702	610.0	114	159	175	83	616.0	616.0		13	614.4

GENERAL NOTES:

(a) Dimensions of Table 14 are in milimeters, except for diameter of bolts and bolt holes, which are in inch units. For dimensions in inch units, refer to Annex F, Table F7.
(b) For tolerances, see para. 7.
(c) For facings, see para. 6.4.
(d) For flange bolt holes, see para. 6.5 and Table 13.
(e) For spot facing, see para 6.6.
(f) For reducing threaded and slip-on flanges, see Table 6.
(g) Blind flanges may be made with or without hubs at the manufacturer's option.
(h) For reducing welding neck flanges, see para 6.8.

NOTES:

(1) This dimension is for large end of hub, which may be straight or tapered. Taper shall not exceed 7 deg on threaded, slip-on, socket-welding, and lapped flanges. This dimension is defined as the diameter at the intersection between the hub taper and the back face of the flange.
(2) For welding end bevel, see para. 6.7.
(3) For thread of threaded flanges, see para. 6.9.
(4) Socket welding flanges may be provided in NPS ½ through NPS 2½, using Class 600 dimensions.

Not for Resale

CLASS 600 PIPE FLANGES AND FLANGED FITTINGS

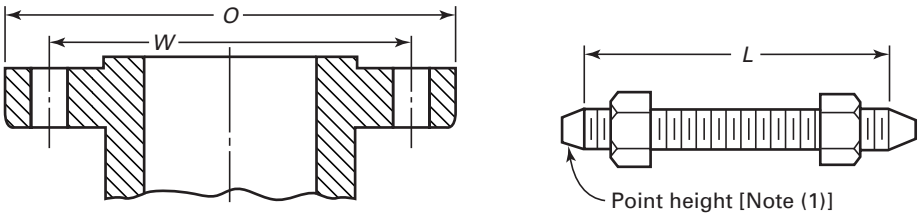

Flange Stud Bolt With Nuts

Table 15 Templates for Drilling Class 600 Flanges

1	2	3	4	5	6	7	8	9
		Drilling [Notes (2), (3)]				Length of Bolts, *L* [Notes (1), (4)]		
Nominal Pipe Size NPS	Outside Diameter of Flange, *O*	Diameter of Bolt Circle, *W*	Diameter of Bolt Holes in.	Number of Bolts	Diameter of Bolts in.	7 mm Raised Face	Male and Female/ Tongue and Groove	Ring Joint
1/2	95	66.7	5/8	4	1/2	75	70	75
3/4	115	82.6	3/4	4	5/8	90	85	90
1	125	88.9	3/4	4	5/8	90	85	90
1 1/4	135	98.4	3/4	4	5/8	95	90	95
1 1/2	155	114.3	7/8	4	3/4	110	100	110
2	165	127.0	3/4	8	5/8	110	100	110
2 1/2	190	149.2	7/8	8	3/4	120	115	120
3	210	168.3	7/8	8	3/4	125	120	125
3 1/2	230	184.2	1	8	7/8	140	135	140
4	275	215.9	1	8	7/8	145	140	145
5	330	266.7	1 1/8	8	1	165	160	165
6	355	292.1	1 1/8	12	1	170	165	170
8	420	349.2	1 1/4	12	1 1/8	190	185	195
10	510	431.8	1 3/8	16	1 1/4	215	210	215
12	560	489.0	1 3/8	20	1 1/4	220	215	220
14	605	527.0	1 1/2	20	1 3/8	235	230	235
16	685	603.2	1 5/8	20	1 1/2	255	250	255
18	745	654.0	1 3/4	20	1 5/8	275	265	275
20	815	723.9	1 3/4	24	1 5/8	285	280	290
24	940	838.2	2	24	1 7/8	330	325	335

GENERAL NOTES:

(a) Dimensions of Table 15 are in millimeters, except for diameters of bolts and bolt holes, which are expressed in inch units. For dimensions in inch units, refer to Annex F, Table F15.

(b) For other dimensions, see Table 16.

NOTES:

(1) Length of stud bolt does not include the height of the points. See para 6.10.2.

(2) For flange bolt holes, see para. 6.5.

(3) For spot facing, see para 6.6.

(4) Bolt lengths not shown in table may be in accordance with Annex D. See para. 6.10.2.

Copyright ASME International
Provided by IHS under license with ASME
No reproduction or networking permitted without license from IHS Not for Resale

Copyright ASME International
Provided by IHS under license with ASME
No reproduction or networking permitted without license from IHS

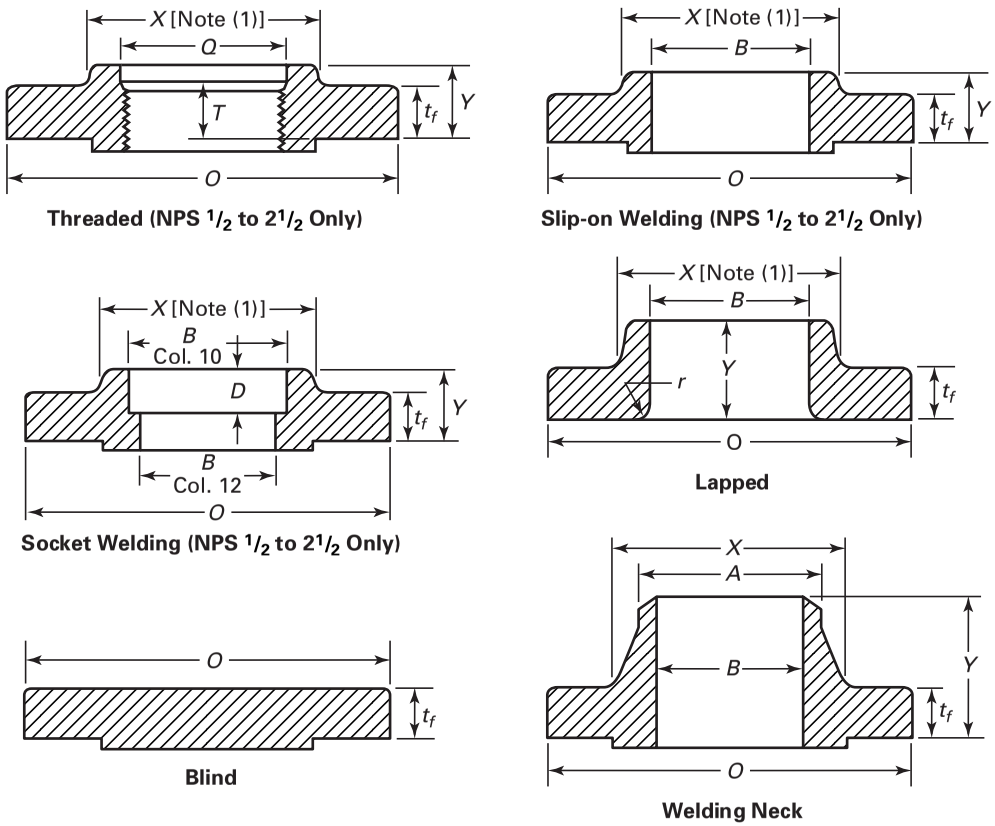

Table 16 Dimensions of Class 600 Flanges

1	2	3	4	5	6	7	8	9	10	11	12	13	14	15
					Length Through Hub				Bore					
Nominal Pipe Size NPS	Outside Diameter of Flange, *O*	Thickness of Flange, Min., t_f	Diameter of Hub, *X*	Hub Diameter Beginning of Chamfer Welding Neck, *A* [Note (2)]	Threaded/ Slip-on/ Socket Welding, *Y*	Lapped, *Y*	Welding Neck, *Y*	Thread Length Threaded Flange Min., *T* [Note (3)]	Slip-on/ Socket Welding, Min., *B*	Lapped Min., *B*	Welding Neck/ Socket Welding, *B*	Corner Radius of Bore of Lapped Flange and Pipe, *r*	Counter bore Threaded Flange Min., *Q*	Depth of Socket, *D*
1/2	95	14.3	38	21.3	22	22	52	16	22.2	22.9	To be	3	23.6	10
3/4	115	15.9	48	26.7	25	25	57	16	27.7	28.2	specified	3	29.0	11
1	125	17.5	54	33.4	27	27	62	18	34.5	34.9	by	3	35.8	13
1 1/4	135	20.7	64	42.2	29	29	67	21	43.2	43.7	Purchaser	5	44.4	14
1 1/2	155	22.3	70	48.3	32	32	70	23	49.5	50.0		6	50.6	16

Not for Resale

Copyright ASME International
Provided by IHS under license with ASME
No reproduction or networking permitted without license from IHS

Table 16 Dimensions of Class 600 Flanges (Cont'd)

1	2	3	4	5	6	7	8	9	10	11	12	13	14	15
					Length Through Hub				Bore					
Nominal Pipe Size NPS	Outside Diameter of Flange, *O*	Thickness of Flange, Min. t_f	Diameter of Hub, *X*	Hub Diameter Beginning of Chamfer Welding Neck, *A* [Note (2)]	Threaded/ Slip-on/ Socket Welding, *Y*	Lapped, *Y*	Welding Neck, *Y*	Thread Length Threaded Flange Min., *T* [Note (3)]	Slip-on/ Socket Welding Min., *B*	Lapped, Min., *B*	Welding Neck/ Socket Welding, *B*	Corner Radius of Bore of Lapped Flange and Pipe, *r*	Counter bore Threaded Flange Min. *Q*	Depth of Socket, *D*
2	165	25.4	84	60.3	37	37	73	29	61.9	62.5		8	63.5	17
2½	190	28.6	100	73.0	41	41	79	32	74.6	75.4		8	76.2	19
3	210	31.8	117	88.9	46	46	83	35	90.7	91.4		10	92.2	21
3½	230	35.0	133	101.6	49	49	86	40	103.4	104.1		10	104.9	. . .
4	275	38.1	152	114.3	54	54	102	42	116.1	116.8		11	117.6	. . .
5	330	44.5	189	141.3	60	60	114	48	143.8	144.4		11	144.4	. . .
6	355	47.7	222	168.3	67	67	117	51	170.7	171.4		13	171.4	. . .
8	420	55.6	273	219.1	76	76	133	58	221.5	222.2		13	222.2	. . .
10	510	63.5	343	273.0	86	111	152	66	276.2	277.4		13	276.2	. . .
12	560	66.7	400	323.8	92	117	156	70	327.0	328.2		13	328.6	. . .
14	605	69.9	432	355.6	94	127	165	74	359.2	360.2		13	360.4	. . .
16	685	76.2	495	406.4	106	140	178	78	410.5	411.2		13	411.2	. . .
18	745	82.6	546	457.0	117	152	184	80	461.8	462.3		13	462.0	. . .
20	815	88.9	610	508.0	127	165	190	83	513.1	514.4		13	512.8	. . .
24	940	101.6	718	610.0	140	184	203	93	616.0	616.0		13	614.4	. . .

GENERAL NOTES:

(a) Dimensions of Table 16 are in millimeters, except for diameter of bolts and bolt holes, which are in inch units. For dimensions in inch units, refer to Annex F, Table F16.
(b) For tolerance, see para. 7.
(c) For facings, see para. 6.4.
(d) For flange bolt holes, see para. 6.5 and Table 15.
(e) For spot facing, see para. 6.6.
(f) For reducing threaded and slip-on flanges, see Table 6.
(g) Blind flanges may be made with or without hubs at the manufacturer's option.
(h) For reducing welding neck flanges, see para. 6.8.

NOTES:

(1) This dimension is for large end of hub, which may be straight or tapered. Taper shall not exceed 7 deg on threaded, slip-on, socket-welding, and lapped flanges. This dimension is defined as the diameter at the intersection between the hub taper and the back face of the flange.
(2) For welding end bevel, see para. 6.7.
(3) For thread of threaded flanges, see para. 6.9.

Not for Resale

CLASS 900 PIPE FLANGES AND FLANGED FITTINGS

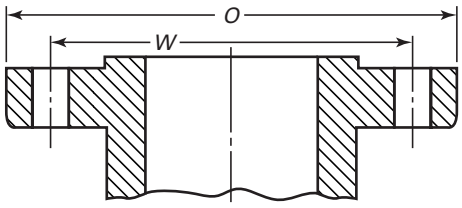

Flange

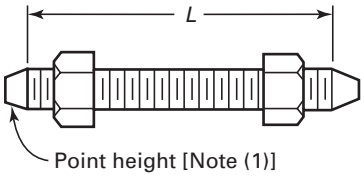

Stud Bolt With Nuts

Table 17 Templates for Drilling Class 900 Flanges

1	2	3	4	5	6	7	8	9
							Length of Bolts, *L* [Notes (1), (4)]	
		Drilling [Notes (2), (3)]						
Nominal Pipe Size NPS	Outside Diameter of Flange, *O*	Diameter of Bolt Circle, *W*	Diameter of Bolt Holes, in.	Number of Bolts	Diameter of Bolts, in.	7 mm Raised Face	Male and Female/ Tongue and Groove	Ring Joint
1/2 3/4 1 1 1/4 1 1/2 2 2 1/2	Use Class 1500 dimensions in these sizes.							
3	240	190.5	1	8	7/8	145	140	145
4	290	235.0	1 1/4	8	1 1/8	170	165	170
5	350	279.4	1 3/8	8	1 1/4	190	185	190
6	380	317.5	1 1/4	12	1 1/8	190	185	195
8	470	393.7	1 1/2	12	1 3/8	220	215	220
10	545	469.9	1 1/2	16	1 3/8	235	230	235
12	610	533.4	1 1/2	20	1 3/8	255	250	255
14	640	558.8	1 5/8	20	1 1/2	275	265	280
16	705	616.0	1 3/4	20	1 5/8	285	280	290
18	785	685.8	2	20	1 7/8	325	320	335
20	855	749.3	2 1/8	20	2	350	345	360
24	1,040	901.7	2 5/8	20	2 1/2	440	430	455

GENERAL NOTES:

(a) Dimensions of Table 17 are in millimeters, except for diameters of bolts and bolt holes, which are in inch units. For dimensions in inch units, refer to Annex F, Table F17.

(b) For other dimensions, see Tables 18 and 19.

NOTES:

(1) Length of stud bolt does not include the height of the points. See para 6.10.2.

(2) For flange bolt holes, see para. 6.5.

(3) For spot facing, see para. 6.6.

(4) Bolt lengths not shown in Table may be determined in accordance with Annex D. See para. 6.10.2.

Copyright ASME International
Provided by IHS under license with ASME
No reproduction or networking permitted without license from IHS
Not for Resale

Copyright ASME International
Provided by IHS under license with ASME
No reproduction or networking permitted without license from IHS

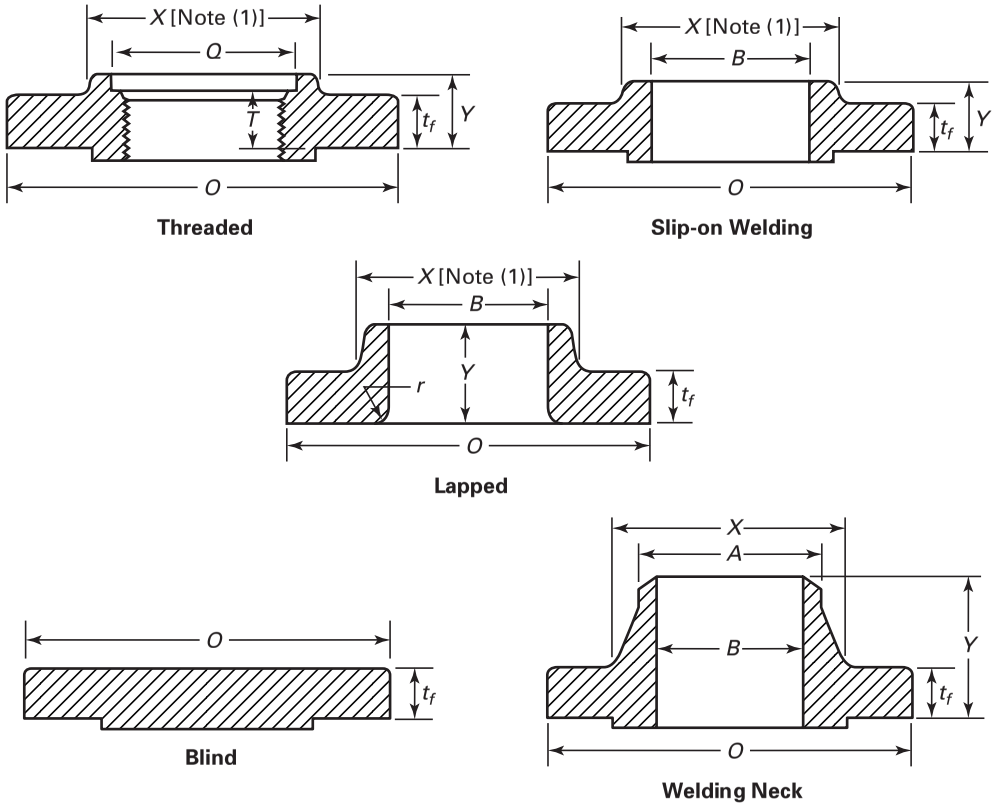

Table 18 Dimensions of Class 900 Flanges

1	2	3	4	5	6	7	8	9	10	11	12	13	14
					Length Through Hub				Bore				
Nominal Pipe Size, NPS	Outside Diameter of Flange, *O*	Thickness of Flange Min., t_f	Diameter of Hub, *X*	Hub Diameter Beginning of Chamfer Welding Neck, *A* [Note (2)]	Threaded/ Slip-on, *Y*	Lapped, *Y*	Welding Neck, *Y*	Thread Length Threaded Flange Min., *T* [Note (3)]	Slip-on Min., *B*	Lapped Min., *B*	Welding Neck, *B*	Corner Radius of Bore of Lapped Flange and Pipe, *r*	Counterbore Threaded Flange Min., *Q*
1/2													
3/4													
1													
1 1/4													

Use Class 1500 Dimensions in these sizes [Note (4)].

Not for Resale

Copyright ASME International
Provided by IHS under license with ASME
No reproduction or networking permitted without license from IHS

Table 18 Dimensions of Class 900 Flanges (Cont'd)

1	2	3	4	5	6	7	8	9	10	11	12	13	14
					Length Through Hub				Bore				
Nominal Pipe Size, NPS	Outside Diameter of Flange, *O*	Thickness of Flange Min., t_f	Diameter of Hub, *X*	Hub Diameter Beginning of Chamfer Welding Neck, *A* [Note (2)]	Threaded/ Slip-on, *Y*	Lapped, *Y*	Welding Neck, *Y*	Thread Length Threaded Flange Min., *T* [Note (3)]	Slip-on Min., *B*	Lapped Min., *B*	Welding Neck, *B*	Corner Radius of Bore of Lapped Flange and Pipe, *r*	Counterbore Threaded Flange Min., *Q*
$1\frac{1}{2}$ 2 $2\frac{1}{2}$	Use Class 1500 Dimensions in these sizes [Note (4)].												
3	240	38.1	127	88.9	54	54	102	42	90.7	91.4	To be specified by Purchaser	10	92.2
4	290	44.5	159	114.3	70	70	114	48	116.1	116.8		11	117.6
5	350	50.8	190	141.3	79	79	127	54	143.8	144.4		11	144.4
6	380	55.6	235	168.3	86	86	140	58	170.7	171.4		13	171.4
8	470	63.5	298	219.1	102	114	162	64	221.5	222.2		13	222.2
10	545	69.9	368	273.0	108	127	184	72	276.2	277.4		13	276.2
12	610	79.4	419	323.8	117	143	200	77	327.0	328.2		13	328.6
14	640	85.8	451	355.6	130	156	213	83	359.2	360.2		13	360.4
16	705	88.9	508	406.4	133	165	216	86	410.5	411.2		13	411.2
18	785	101.6	565	457.0	152	190	229	89	461.8	462.3		13	462.0
20	855	108.0	622	508.0	159	210	248	93	513.1	514.4		13	512.8
24	1,040	139.7	749	610.0	203	267	292	102	616.0	616.0		13	614.4

GENERAL NOTES:

(a) Dimensions of Table 18 are in millimeters. For dimensions in inch units, refer to Annex F, Table F18.
(b) For tolerances, see para. 7.
(c) For facings, see para. 6.4.
(d) For flange bolt holes, see para. 6.5 and Table 17.
(e) For spot facing, see para 6.6.
(f) For reducing threaded and slip-on flanges, see Table 6.
(g) Blind flanges may be made with or without hubs at the manufacturer's option.
(h) For reducing welding neck flanges, see para. 6.8.

NOTES:

(1) This dimension is for large end of hub, which may be straight or tapered. Taper shall not exceed 7 deg on threaded, slip-on, socket-welding, and lapped flanges. This dimension is defined as the diameter at the intersection between the hub taper and the back face of the flange.
(2) For welding end bevel, see para. 6.7.
(3) For thread of threaded flanges, see para. 6.9.
(4) Socket welding flanges may be provided in NPS $\frac{1}{2}$ through NPS $2\frac{1}{2}$, using Class 1500 dimensions.

Not for Resale

CLASS 1500 PIPE FLANGES

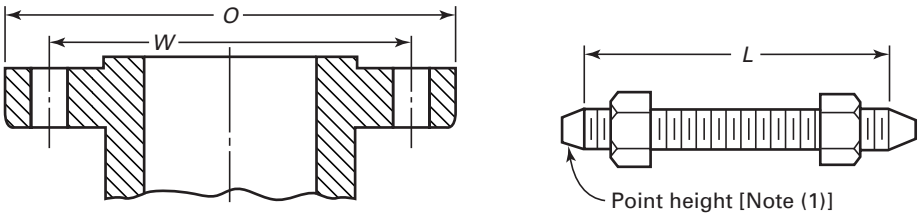

Flange Stud Bolt With Nuts

Table 19 Templates for Drilling Class 1500 Flanges

1	2	3	4	5	6	7	8	9
		Drilling [Notes (2), (3)]				Length of Bolts, *L* [Notes (1), (4)]		
Nominal Pipe Size, NPS	Outside Diameter of Flange, *O*	Diameter of Bolt Circle, *W*	Diameter of Bolt Holes, in.	Number of Bolts	Diameter of Bolts, in.	7 mm Raised Face	Male and Female/ Tongue and Groove	Ring Joint
1/2	120	82.6	7/8	4	3/4	110	100	110
3/4	130	88.9	7/8	4	3/4	115	110	115
1	150	101.6	1	4	7/8	125	120	125
1 1/4	160	111.1	1	4	7/8	125	120	125
1 1/2	180	123.8	1 1/8	4	1	140	135	140
2	215	165.1	1	8	7/8	145	140	145
2 1/2	245	190.5	1 1/8	8	1	160	150	160
3	265	203.2	1 1/4	8	1 1/8	180	170	180
4	310	241.3	1 3/8	8	1 1/4	195	190	195
5	375	292.1	1 5/8	8	1 1/2	250	240	250
6	395	317.5	1 1/2	12	1 3/8	260	255	265
8	485	393.7	1 3/4	12	1 5/8	290	285	325
10	585	482.6	2	12	1 7/8	335	330	345
12	675	571.5	2 1/8	16	2	375	370	385
14	750	635.0	2 3/8	16	2 1/4	405	400	425
16	825	704.8	2 5/8	16	2 1/2	445	440	470
18	915	774.7	2 7/8	16	2 3/4	495	490	525
20	985	831.8	3 1/8	16	3	540	535	565
24	1 170	990.6	3 5/8	16	3 1/2	615	610	650

GENERAL NOTES:

(a) Dimensions of Table 19 are in millimeters, except for diameters of bolts and bolt holes, which are in inch units. For dimensions in inch units, refer to Annex F, Table F19.

(b) For other dimensions, see Table 20.

NOTES:

(1) Length of stud bolt does not include the height of the points. See para. 6.10.2.

(2) For flange bolt holes, see para. 6.5.

(3) For spot facing, see para. 6.6.

(4) Bolt lengths not shown in table may be determined in accordance with Annex D. See para. 6.10.2.

--`,,```,,,,````-`-`,,`,,`,`,,`---
Copyright ASME International
Provided by IHS under license with ASME
No reproduction or networking permitted without license from IHS
Not for Resale

Copyright ASME International
Provided by IHS under license with ASME
No reproduction or networking permitted without license from IHS

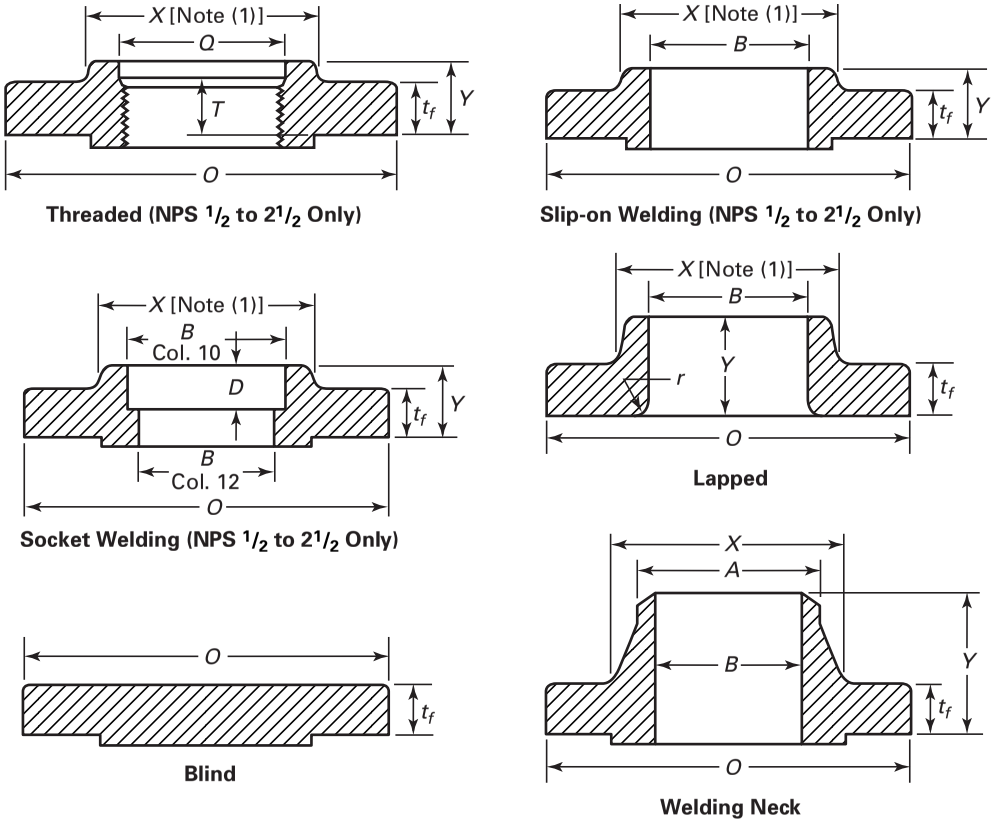

Table 20 Dimensions of Class 1500 Flanges

1	2	3	4	5	6	7	8	9	10	11	12	13	14	15
					Length Through Hub				Bore					
Nominal Pipe Size, NPS	Outside Diameter of Flange, *O*	Thickness of Flange Min., t_f	Diameter of Hub, *X*	Hub Diameter Beginning of Chamfer Welding Neck, *A* [Note (2)]	Threaded/ Slip-on/ Socket Welding, *Y*	Lapped, *Y*	Welding Neck, *Y*	Thread Length Threaded Flange Min., *T* [Note (3)]	Slip-on/ Socket Welding Min., *B*	Lapped Min., *B*	Welding Neck/ Socket Welding, *B*	Corner Radius of Bore of Lapped Flange and Pipe, *r*	Counter bore Threaded Flange Min., *Q*	Depth of Socket, *D*
1/2	120	22.3	38	21.3	32	32	60	23	22.2	22.9	To be	3	23.6	10
3/4	130	25.4	44	26.7	35	35	70	26	27.7	28.2	specified	3	29.0	11
1	150	28.6	52	33.4	41	41	73	29	34.5	34.9	by	3	35.8	13
1 1/4	160	28.6	64	42.2	41	41	73	31	43.2	43.7	Purchaser	5	44.4	14

Not for Resale

Copyright ASME International
Provided by IHS under license with ASME
No reproduction or networking permitted without license from IHS

Table 20 Dimensions of Class 1500 Flanges (Cont'd)

1	2	3	4	5	6	7	8	9	10	11	12	13	14	15
					Length Through Hub				Bore					
Nominal Pipe Size, NPS	Outside Diameter of Flange, *O*	Thickness of Flange Min., t_f	Diameter of Hub, *X*	Hub Diameter Beginning of Chamfer Welding Neck, *A* [Note (2)]	Threaded/ Slip-on/ Socket Welding, *Y*	Lapped, *Y*	Welding Neck, *Y*	Thread Length Threaded Flange Min., *T* [Note (3)]	Slip-on/ Socket Welding Min., *B*	Lapped Min., *B*	Welding Neck/ Socket Welding, *B*	Corner Radius of Bore of Lapped Flange and Pipe, *r*	Counter bore Threaded Flange Min., *Q*	Depth of Socket, *D*
1½	180	31.8	70	48.3	44	44	83	32	49.5	50.0		6	50.6	16
2	215	38.1	105	60.3	57	57	102	39	61.9	62.5		8	63.5	17
2½	245	41.3	124	73.0	64	64	105	48	74.6	75.4		8	76.2	19
3	265	47.7	133	88.9	...	73	117	...	...	91.4		10	...	...
4	310	54.0	162	114.3	...	90	124	...	...	116.8		11	...	...
5	375	73.1	197	141.3	...	105	156	...	...	144.4		11	...	...
6	395	82.6	229	168.3	...	119	171	...	...	171.4		13	...	...
8	485	92.1	292	219.1	...	143	213	...	...	222.2		13	...	...
10	585	108.0	368	273.0	...	178	254	...	...	277.4		13	...	...
12	675	123.9	451	323.8	...	219	283	...	...	328.2		13	...	...
14	750	133.4	495	355.6	...	241	298	...	...	360.2		13	...	...
16	825	146.1	552	406.4	...	260	311	...	...	411.2		13	...	...
18	915	162.0	597	457.0	...	276	327	...	...	462.3		13	...	...
20	985	177.8	641	508.0	...	292	356	...	...	514.4		13	...	
24	1 170	203.2	762	610.0	...	330	406	...	...	616.0		13	...	...

GENERAL NOTES:

(a) Dimensions of Table 20 are in millimeters. For dimensions in inch units, refer to Annex F, Table F20.
(b) For tolerances, see para. 7.
(c) For facings, see para. 6.4.
(d) For flange bolt holes, see para. 6.5 and Table 19.
(e) For spot facing, see para 6.6.
(f) For reducing threaded and slip-on flanges, see Table 6.
(g) Blind flanges may be made with or without hubs at the manufacturer's option.
(h) For reducing welding neck flanges, see para 6.8.

NOTES:

(1) This dimension is for large end of hub, which may be straight or tapered. Taper shall not exceed 7 deg on threaded, slip-on, socket-welding, and lapped flanges. This dimension is defined as the diameter at the intersection between the hub taper and the back face of the flange.
(2) For welding end bevel, see para. 6.7.
(3) For thread of threaded flanges, see para. 6.9.

Not for Resale

CLASS 2500 PIPE FLANGES

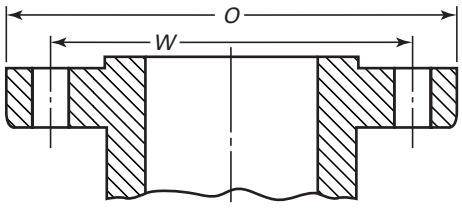

Flange

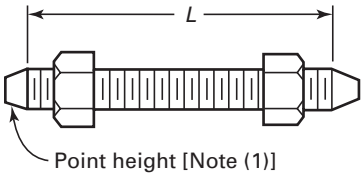

Stud Bolt With Nuts

Table 21 Templates for Drilling Class 2500 Flanges

1	2	3	4	5	6	7	8	9
		Drilling [Notes (2), (3)]				Length of Bolts, *L* [Notes (1), (4)]		
Nominal Pipe Size, NPS	Outside Diameter of Flange, *O*	Diameter of Bolt Circle, *W*	Diameter of Bolt Holes, in.	Number of Bolts	Diameter of Bolts, in.	7 mm Raised Face	Male and Female/ Tongue and Groove	Ring Joint
1/2	135	88.9	7/8	4	3/4	120	115	120
3/4	140	95.2	7/8	4	3/4	125	120	125
1	160	108.0	1	4	7/8	140	135	140
1 1/4	185	130.2	1 1/8	4	1	150	145	150
1 1/2	205	146.0	1 1/4	4	1 1/8	170	165	170
2	235	171.4	1 1/8	8	1	180	170	180
2 1/2	265	196.8	1 1/4	8	1 1/8	195	190	205
3	305	228.6	1 3/8	8	1 1/4	220	215	230
4	355	273.0	1 5/8	8	1 1/2	255	250	260
5	420	323.8	1 7/8	8	1 3/4	300	290	310
6	485	368.3	2 1/8	8	2	345	335	355
8	550	438.2	2 1/8	12	2	380	375	395
10	675	539.8	2 5/8	12	2 1/2	490	485	510
12	760	619.1	2 7/8	12	2 3/4	540	535	560

GENERAL NOTES:

(a) Dimensions of Table 21 are in millimeters, except for diameters of bolts and bolt holes, which are in inch units. For dimensions in inch units, refer to Annex F, Table F21.

(b) For other dimensions, see Table 22.

NOTES:

(1) Length of stud bolt does not include the height of the points. See para. 6.10.2.

(2) For flange bolt holes, see para. 6.5.

(3) For spot facing, see para. 6.6.

(4) Bolt lengths not shown in table may be determined with Annex D. See para. 6.10.2.

Copyright ASME International
Provided by IHS under license with ASME
No reproduction or networking permitted without license from IHS
Not for Resale

Copyright ASME International
Provided by IHS under license with ASME
No reproduction or networking permitted without license from IHS

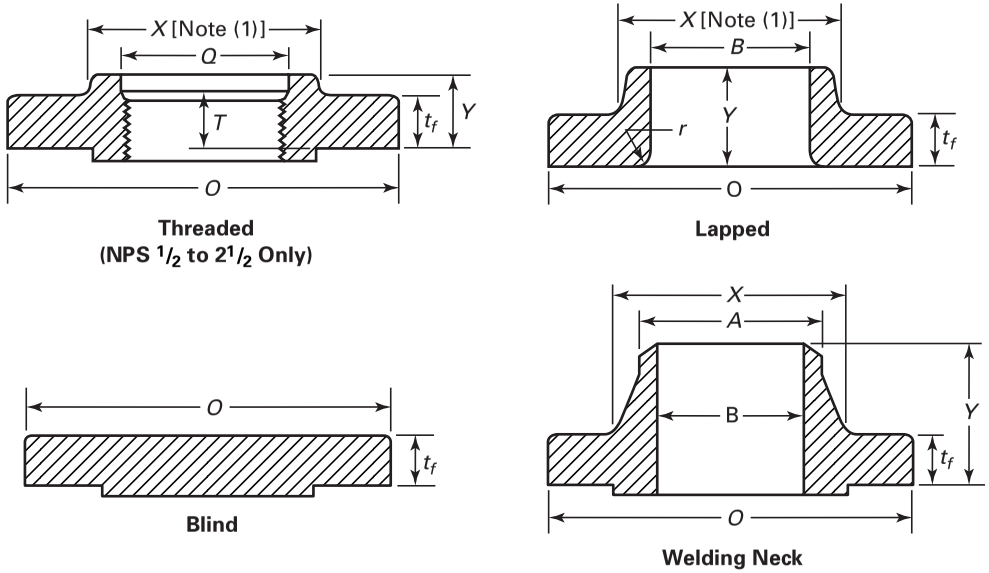

Table 22 Dimensions of Class 2500 Flanges

1	2	3	4	5	6	7	8	9	10	11	12	13
					Length Through Hub				Bore			
Nominal Pipe Size, NPS	Outside Diameter of Flange, *O*	Thickness of Flange Min., t_f	Diameter of Hub, *X*	Hub Diameter Beginning of Chamfer Welding Neck, *A* [Note (2)]	Threaded, *Y*	Lapped, *Y*	Welding Neck, *Y*	Thread Length Threaded Flange Min., *T* [Note (3)]	Lapped Min., *B*	Welding Neck, *B*	Corner Radius of Bore of Lapped Flange and Pipe, *r*	Counterbore Threaded Flange Min., *Q*
1/2	135	30.2	43	21.3	40	40	73	29	22.9	To be	3	23.6
3/4	140	31.8	51	26.7	43	43	79	32	28.2	specified	3	29.0
1	160	35.0	57	33.4	48	48	89	35	34.9	by	3	35.8
1 1/4	185	38.1	73	42.2	52	52	95	39	43.7	Purchaser	5	44.4
1 1/2	205	44.5	79	48.3	60	60	111	45	50.0		6	50.6
2	235	50.9	95	60.3	70	70	127	51	62.5		8	63.5
2 1/2	265	57.2	114	73.0	79	79	143	58	75.4		8	76.2
3	305	66.7	133	88.9	...	92	168	...	91.4		10	...
4	355	76.2	165	114.3	...	108	190	...	116.8		11	...
5	420	92.1	203	141.3	...	130	229	...	144.4		11	...
6	485	108.0	235	168.3	...	152	273	...	171.4		13	...
8	550	127.0	305	219.1	...	178	318	...	222.2		13	...
10	675	165.1	375	273.0	...	229	419	...	277.4		13	...
12	760	184.2	441	323.8	...	254	464	...	328.2		13	...

Not for Resale

Notes to Table 22

GENERAL NOTES:

(a) Dimensions of Table 22 are in milimeters, except for diameter of bolts and bolt holes, which are in inch units. For dimensions in inch units, refer to Annex F, Table F22.
(b) For tolerances, see para. 7.
(c) For facings, see para. 6.4.
(d) For flange bolt holes, see para. 6.5 and Table 21.
(e) For spot facing, see para 6.6.
(f) For reducing threaded and slip-on flanges, see Table 6.
(g) Blind flanges may be made with or without hubs at the manufacturer's option.
(h) For reducing welding neck flanges, see para 6.8.

NOTES:

(1) This dimension is for large end of hub, which may be straight or tapered. Taper shall not exceed 7 deg on threaded, slip-on, socket-welding, and lapped flanges. This dimension is defined as the diameter at the intersection between the hub taper and the back face of the flange.
(2) For welding end bevel, see para. 6.7.
(3) For thread of threaded flanges, see para. 6.9.

Copyright ASME International
Provided by IHS under license with ASME
No reproduction or networking permitted without license from IHS Not for Resale

ANNEX A
THREADING OF PIPE FOR AMERICAN NATIONAL STANDARD THREADED FLANGES[1]

The length of external taper threads in ASME B1.20.1 is sufficient to provide a satisfactory joint when assembled with corresponding internal taper threads in couplings and fittings. In this Standard, the length of internal thread in Class 150, Class 300, and Class 400 flanges also conforms to ASME B1.20.1.

In Class 600 and higher rated flanges, the length through the hub may exceed the length for internal threads in ASME B1.20.1. Where this occurs, the extended length of internal threads follows the taper of the standard taper threads. Therefore, the diameters of the extra threads are smaller than those shown in ASME B1.20.1.

When threaded flanges conforming to this Standard are assembled with threaded-end pipe, it is intended that the end of the pipe be reasonably close to the mating surface of the flange. To meet this intent, the following requirements are imposed on the mating pipe and external thread:

(a) Pipe to be threaded into flanges of Class 600 or higher rating shall be Schedule 80 or heavier in wall thickness.

(b) The length of external effective thread on the pipe end shall be greater than specified in ASME B1.20.1. When tested with the standard ring gage, the pipe end shall project beyond the gage by the distance specified in Table A1, subject to a tolerance of one thread pitch as provided in ASME B1.20.1.

(c) The extra threads shall continue the taper specified in ASME B1.20.1, so that the pitch diameter of the thread at the pipe end is less than specified therein.

(d) It is recommended that power equipment be used to assemble threaded joints having longer than standard taper threads, in order to bring the pipe end close to the flange face.

[1] This Annex is an integral part of ASME B16.5-2003, and is placed after the main text for convenience.

Copyright ASME International
Provided by IHS under license with ASME
No reproduction or networking permitted without license from IHS
Not for Resale

Table A1 Projection of Threaded Pipe End Through a Ring Gage

NPS	Class 150, 300, 400 Number of Turns	Class 600 Number of Turns	Class 600 Projection mm	Class 600 Projection in.	Class 900 Number Of Turns	Class 900 Projection mm	Class 900 Projection in.	Class 1500 Number of Turns	Class 1500 Projection mm	Class 1500 Projection in.	Class 2500 Number of Turns	Class 2500 Projection mm	Class 2500 Projection in.
1/2	...		...	...	...	...	...	3 1/2	6.4	0.25	7	12.7	0.50
3/4	...	Use taper pipe			...	...	...	5	9.5	0.38	7	12.7	0.50
1	...	thread per			...	...	...	5	11.1	0.44	7 1/2	16.5	0.65
1 1/4	...	ASME B1.20.1			...	...	...	5	11.1	0.44	7 1/2	16.5	0.65
1 1/2	...	for these sizes		...	...	...	...	5	11.1	0.44	7 1/2	16.5	0.65
2	...		...	...	...	...	11.1	5	11.1	0.44	7 1/2	16.5	0.65
2 1/2	...	...	...	...	...	...	...	5	15.9	0.62	8	25.4	1.00
3	...	1	3.2	0.12	3	9.5	0.38	6	19.0	0.75	10	31.8	1.25
3 1/2	...	1	3.2	0.12	...	...	...	...	...	...	...	...	...
4	...	1 1/2	4.8	0.19	3 1/2	11.1	0.44	6 1/2	20.6	0.81	10 1/2	33.3	1.31
5	...	1 1/2	4.8	0.19	3 1/2	11.1	0.44	6 1/2	20.6	0.81	10 1/2	33.3	1.31
6	Use taper pipe	1 1/2	4.8	0.19	3 1/2	11.1	0.44	7 1/2	23.8	0.94	11 1/2	36.5	1.44
8	thread per	2	6.4	0.25	4	12.7	0.50	8	25.4	1.00	14	44.5	1.75
10	ASME B1.20.1	3	9.5	0.38	5	15.9	0.62	9	28.4	1.12	16	50.8	2.00
12	for these sizes	3	9.5	0.38	5	15.9	0.62	10	31.8	1.25	19	60.3	2.38
14		3	9.5	0.38	6	19.0	0.75	...	...	...	...	...	...
16		3	9.5	0.38	6	19.0	0.75	...	...	...	...	...	...
18		3	9.5	0.38	6	19.0	0.75	...	...	...	...	...	...
20		3	9.5	0.38	6	19.0	0.75	...	...	...	...	...	...
24		3	9.5	0.38	6	19.0	0.75	...	...	...	...	...	...

Copyright ASME International
Provided by IHS under license with ASME
No reproduction or networking permitted without license from IHS
Not for Resale

ANNEX B
METHOD USED FOR ESTABLISHING PRESSURE–TEMPERATURE RATINGS[1]

B1 GENERAL CONSIDERATIONS

B1.1 Introduction

Pressure–temperature ratings for this Standard have been determined by the procedures described in this Annex. These procedures are counterpart to those identified as Standard Class in ASME B16.34. The primary considerations in establishing ratings are component dimensions and material properties to sustain pressure and other loads.[2] Other considerations affecting or limiting ratings include

(a) stresses in flanges resulting from bolt-up necessary to maintain a gasket seal

(b) distortion of flanges and flanged fittings due to loads transmitted through attached piping

(c) limitations applying primarily to flanged components (e.g., valves), but also imposed on flanges in order to preserve compatible ratings

B1.2 Bolt Cross-sectional Area

Total flange bolting cross-sectional area requirements are based on the following relationship

$$A_b \geq \frac{P_c A_g}{7000} \tag{1}$$

where

A_b = total effective bolt tensile stress area
A_g = an area whose circumference is defined by a diameter equal to the raised face dimension R in Table 4
P_c = pressure rating class designation or number (e.g., for Class 150, $P_c = 150$; for Class 300, $P_c = 300$)

B1.3 Flanged Fitting Wall Thickness

Wall thickness requirements for flanged fittings are specified in para. 6.1. The minimum wall thickness values t_m are shown in the tables designated in para. 6.1. These values are all greater than those determined by Eq. (2).

$$t = 1.5\left[\frac{P_c d}{2S_F - 1.2P_c}\right] \tag{2}$$

where

P_c = pressure rating class designation or number (e.g., for Class 150, $P_c = 150$; for Class 300, $P_c = 300$)
S_F = stress base constant equal to 7000
d = inside diameter of the fitting
t = calculated thickness

The resultant units for t will be the same as those used to express d. Equation (2) results in a fitting wall thickness 50% greater than that for a simple cylinder designed for a stress of 48.28 MPa (7000 psi) when subjected to an internal pressure equal to the pressure rating class designation P_c. The actual values in the dimension tables referred to in para. 6.1 are approximately 2.5 mm (0.1 in.) larger than those given by the equation.

B1.4 Material Properties

The pressure–temperature rating method uses allowable stress, ultimate tensile strength, and yield strength values from Section II, Part D of the ASME Boiler and Pressure Vessel Code. For materials listed herein that have ratings either at temperature values that are above those shown in a reference Code Section or that are not listed in any of the reference Code Sections, the allowable stress, ultimate tensile strength, and yield strength data have been provided directly by the ASME Boiler and Pressure Vessel Subcommittee on Materials.

B1.5 Material Groups

Materials are grouped in Table 1A based on identical or closely matched allowable stress and yield strength values. When these values are not identical for each material listed, the lowest value has been used. Note that material groups in this Standard are not numbered consecutively. The unlisted numbers, numbers that are not part of this Standard may be found in the materials tables of ASME B16.34.

B2 PRESSURE-TEMPERATURE RATING METHOD

B2.1 Rating Equation Class 300 and Higher

Pressure–temperature ratings for Class 300 and higher components, of materials listed to those in Table 1A, were established by the equation

[1] This Annex is an integral part of ASME B16.5-2003, and is placed after the main text for convenience.

[2] This method is appropriate for materials listed in Table 1A. It may not be appropriate for other materials.

Copyright ASME International
Provided by IHS under license with ASME
No reproduction or networking permitted without license from IHS
Not for Resale

$$p_t = \frac{C_1 S_1}{8750} P_r \le p_c \quad (3)$$

where

C_1 = 10 when S_1 is expressed in MPa units and the resultant p_t will be in bar units (C_1 = 1 when S_1 is expressed in psi units and the resultant p_t will be in psi units)

P_r = pressure rating class index. For all designations Class 300 and above, P_r is equal to the class designation (e.g., for Class 300, P_r = 300). (For Class 150, see para. B2.4 of this Annex.)

S_1 = selected stress, MPa (psi) for the specified material at temperature T. The value of S_1 shall be established as described in paras. B2.2, B2.3, and B2.4.

p_c = ceiling pressure, bar (psi), at temperature T as specified in para. B3

p_t = rated working pressure, bar (psi), for the specified material at temperature T

B2.2 Ratings for Group No. 1 Materials

The selected stress for Group No. 1 materials in Table 1A is determined as follows:

(a) At temperatures below the creep range S_1 shall be equal to or less than

(1) 60% of the specified minimum yield strength at 38°C (100°F)

(2) 60% of the yield strength at temperature T

(3) 1.25 times 25% of the ultimate tensile strength value at temperature T, as listed in Section II, Part D of the ASME Boiler and Pressure Vessel Code for either Section I or Section VIII, Division 1.

(b) At temperatures in the creep range, the value of S_1 shall be the allowable stress at temperature T, as listed in Section II, Part D of the ASME Boiler and Pressure Vessel Code, for either Section I or Section VIII, Division 1; but not exceeding 60% of the listed yield strength at temperature.

(c) In no case shall the selected stress value increase with increasing temperature.

(d) The creep range is considered to be at temperatures in excess of 370°C (700°F) for Group 1 materials.

(e) When the allowable stresses listed for the reference ASME Boiler and Pressure Vessel Code Section show a higher and lower value for allowable stress and the higher value is noted to the effect that these stress values exceed two-thirds of the yield strength at temperature, then the lower value shall be used. If lower allowable stress values do not appear and it is noted in the allowable stress table that the allowable stress values exceed two-thirds of the yield strength at temperature, then the allowable stress values used shall be determined as two-thirds of the tabulated yield strength at temperature.

(f) Yield strength shall be as listed in Section II, Part D of the ASME Boiler and Pressure Vessel Code, for either Section III or Section VIII, Division 2.

(g) Allowable stress values listed in Section II, Part D of the ASME Boiler and Pressure Vessel Code, for Section III, Class 2 or Class 3 values may only be used for a material not listed for either Section I or Section VIII, Division 1.

B2.3 Method for Groups 2 and 3 Materials

Pressure–temperature ratings for Class 300 and higher, of materials corresponding to those in Materials Groups 2 and 3 of Table 1A are established by the method of paras. B2.1 and B2.2, except that in paras. B2.2(a)(1) and B2.2(a)(2), the 60% factor shall be changed to 70%. For Group 2 materials, the creep range is considered to be at temperatures in excess of 510°C (950°F) unless the material properties indicate lower temperatures should be used. For Group 3 materials, the creep range onset temperature shall be determined on an individual basis.

B2.4 Method for Class 150 — All Materials

Pressure–temperature ratings for Class 150 rating designation are established by the method given for the related materials in paras. B2.1, B2.2, and B2.3 subject to the following exceptions:

(a) The value of P_r, the pressure class rating index in Eq. (2) for Class 150, shall be 115.

(b) The value for S_1 the selected stress MPa (psi) for the specific material at temperature T shall be in accordance with the requirements of either para. B2.1 or B2.2, as applicable.

(c) The value of p_t, the rated working pressure bar (psi), for Class 150, shall not exceed values at temperature T as given by Eq. (4).

$$p_t \le C_2 - C_3 T \quad (4)$$

where:

C_2 = 21.41

C_3 = 0.03724 with T expressed in °C, the resultant p_t will be in bar units (C_2 = 320 and C_3 = 0.3, with T expressed in °F, the resultant p_t will be in psi units)

T = material temperature, °C (°F)

The value of T in Eq. (4) shall not exceed 538°C (1000°F). For values of T less than 38°C (100°F), use T equal to 38°C (100°F) in Eq. (4).

B3 MAXIMUM RATINGS

The rules for establishing pressure–temperature ratings include consideration of ceiling pressures p_c that effectively set limits on the selected stress. The ceiling pressure–temperature values set an upper bound for high strength materials and are imposed to limit deflection. Ceiling pressure values are listed in Tables B1 and B2. Ratings in excess of these ceiling values are not permitted under this Standard.

Copyright ASME International
Provided by IHS under license with ASME
No reproduction or networking permitted without license from IHS
Not for Resale

Table B1 Rating Ceiling Pressure p_c, bar

Temperature °C	CLASS Class 150	Class 300	Class 400	Class 600	Class 900	Class 1500	Class 2500
−29 to 38	20.0	51.7	68.9	103.4	155.1	258.6	430.9
50	19.5	51.7	68.9	103.4	155.1	258.6	430.9
100	17.7	51.5	68.7	103.0	154.6	257.6	429.4
150	15.8	50.3	66.8	100.3	150.6	250.8	418.2
200	13.8	48.6	64.8	97.2	145.8	243.4	405.4
250	12.1	46.3	61.7	92.7	139.0	231.8	386.2
300	10.2	42.9	57.0	85.7	128.6	214.4	357.1
325	9.3	41.4	55.0	82.6	124.0	206.6	344.3
350	8.4	40.3	53.6	80.4	120.7	201.1	335.3
375	7.4	38.9	51.6	77.6	116.5	194.1	323.2
400	6.5	36.5	48.9	73.3	109.8	183.1	304.9
425	5.5	35.2	46.5	70.0	105.1	175.1	291.6
450	4.6	33.7	45.1	67.7	101.4	169.0	281.8
475	3.7	31.7	42.3	63.4	95.1	158.2	263.9
500	2.8	28.2	37.6	56.5	84.7	140.9	235.0
525	1.9	25.8	34.4	51.6	77.4	129.0	214.9
538	1.4	25.2	33.4	50.0	75.2	125.5	208.9
550	(1)	25.0	33.3	49.8	74.8	124.9	208.0
575	(1)	24.0	31.9	47.9	71.8	119.7	199.5
600	(1)	21.6	28.6	42.9	64.2	107.0	178.5
625	(1)	18.3	24.3	36.6	54.9	91.2	152.0
650	(1)	14.1	18.9	28.1	42.5	70.7	117.7
675	(1)	12.4	16.9	25.2	37.6	62.7	104.5
700	(1)	10.1	13.4	20.0	29.8	49.7	83.0
725	(1)	7.9	10.5	15.4	23.2	38.6	64.4
750	(1)	5.9	7.9	11.7	17.6	29.6	49.1
775	(1)	4.6	6.2	9.0	13.7	22.8	38.0
800	(1)	3.5	4.8	7.0	10.5	17.4	29.2
816	(1)	2.8	3.8	5.9	8.6	14.1	23.8

NOTE:
(1) Ratings for flanges and flanged fittings terminate at 538°C (1000°F).

Copyright ASME International
Provided by IHS under license with ASME
No reproduction or networking permitted without license from IHS
Not for Resale

Table B2 Rating Ceiling Pressure — p_c, psi

Temperature °F	Class 150	Class 300	Class 400	Class 600	Class 900	Class 1500	Class 2500
			Class				
−20 to 100	290	750	1000	1500	2250	3750	6250
200	260	750	1000	1500	2250	3750	6250
300	230	730	970	1455	2185	3640	6070
400	200	705	940	1410	2115	3530	5880
500	170	665	885	1330	1995	3325	5540
600	140	605	805	1210	1815	3025	5040
650	125	590	785	1175	1765	2940	4905
700	110	570	755	1135	1705	2840	4730
750	95	530	710	1065	1595	2660	4430
800	80	510	675	1015	1525	2540	4230
850	65	485	650	975	1460	2435	4060
900	50	450	600	900	1350	2245	3745
950	35	385	515	775	1160	1930	3220
1000	20	365	485	725	1090	1820	3030
1050	(1)	360	480	720	1080	1800	3000
1100	(1)	325	430	645	965	1610	2685
1150	(1)	275	365	550	825	1370	2285
1200	(1)	205	275	410	620	1030	1715
1250	(1)	180	245	365	545	910	1515
1300	(1)	140	185	275	410	685	1145
1350	(1)	105	140	205	310	515	860
1400	(1)	75	100	150	225	380	630
1450	(1)	60	80	115	175	290	485
1500	(1)	40	55	85	125	205	345

NOTE:
(1) Ratings of flanges and flanged fittings terminate at 1000°F (538°C).

Copyright ASME International
Provided by IHS under license with ASME
No reproduction or networking permitted without license from IHS
Not for Resale

ANNEX C
LIMITING DIMENSIONS OF GASKETS OTHER THAN RING JOINT GASKETS[1]

C1 GASKET MATERIALS AND CONSTRUCTION

Classification of Gasket Materials and types is shown in Table C1. Other gaskets that result in no increase in bolt loads or flange moment over those resulting from the gaskets included in the respective Groups may be used. See para. 5.4

C2 GASKET DIMENSIONS

Reference to a dimensional standad for gaskets (e.g., ASME B16.21) is recommended. In any event, selected dimensions should be based on the type of gasket and its characteristics. These characteristics include density, flexibility, compatibility with the fluid being contained and gasket compression needed to maintain sealing. Consideration should be given to the need for a "pocket" at the gasket inside diameter (between the flange facings) or of intrusion of the gasket into the flange bore. Consideration should also be given to the effects that the contained fluid may have upon the gasket including damage that may result from partial disintegration of the gasket material.

[1] This Annex is not a mandatory annex of ASME B16.5-2003, and is placed after the main text for information.

Copyright ASME International
Provided by IHS under license with ASME
No reproduction or networking permitted without license from IHS
Not for Resale

Table C1 Gasket Groups and Typical Materials

Gasket Group Number	Gasket Material	Sketches
Ia	Self-energizing types: O rings, metallic, elastomer, other gasket types considered as self-sealing	
	Elastomer without fabric	
	Compressed sheet suitable for the operating conditions	
	Fluoropolymer, Elastomer with cotton fabric insertion	
	Elastomer with or without wire reinforcement	
	Vegetable fiber	
Ib	Spiral-wound metal, with nonmetallic filler	
	Corrugated aluminum, copper or copper alloy or corrugated aluminum, copper or copper alloy double jacketed with nonmetallic filler	
	Corrugated aluminum, copper, or brass	
IIa and IIb	Corrugated metal or corrugated metal double jacketed with nonmetallic filler	
	Corrugated metal	
	Flat metal jacketed with nonmetallic filler	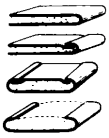
	Grooved metal	
IIIa and IIIb	Solid flat soft aluminum Solid flat metal	
	Ring joint	

Copyright ASME International
Provided by IHS under license with ASME
No reproduction or networking permitted without license from IHS
Not for Resale

ANNEX D
METHOD FOR CALCULATING BOLT LENGTHS[1, 2]

The following equations were used in establishing dimension L as listed in various dimensional tables.

$$L_{CSB} = A + n$$

$$L_{CMB} = B + n$$

For lapped joints, calculate stud bolt and machine bolt length as follows.

For ring joint groove facing:

$$L_{CSB} = A + \text{(pipe thickness for each lap)} + n$$

$$L_{CMB} = B + \text{(pipe thickness for each lap)} + n$$

For other than ring joint facing:

$$L_{CSB} = A - F + \text{(Table D3 thicknesses)} + n$$

$$L_{CMB} = B - F + \text{(Table D3 thicknesses)} + n$$

where:

A = $2(t_f + t + d) + G + F - a$ (i.e., stud bolt length exclusive of negative length tolerance n)

B = $2(t_f + t) + d + G + F + p - a$ (i.e., machine bolt length exclusive of negative tolerance n)

F = total height of facings or depth of ring joint groove for both flanges (see Table D1)

G = 3.0 mm (0.12 in.) gasket thickness for raised face, male and female tongue and groove flanges; also approximate distance between ring joint flanges listed in Table 5 (Table F5 of Annex F)

L_{CMB} = calculated machine bolt length as measured from underside of head to end of point

L_{CSB} = calculated stud bolt length (effective thread length, excluding end points)

L_{SMB} = specified machine bolt length (from underhead to end, including end point), which is L_{CMB} rounded off to the nearest 5 mm (0.25 in.) increment (see Fig. D2)

L_{SSB} = specified stud bolt length (effective thread length, excluding end points) which is L_{CSB} rounded off to the nearest 5 mm (0.25 in.) increment (see Fig. D1)

a = zero, except where the small female face is on the end of pipe, a = 5 mm (0.19 in.)

d = heavy nut thickness (equals nominal bolt diameter, see ASME B18.2.2)

n = negative tolerance on bolt length (see Table D2)

p = allowance for height of point of machine bolt (1.5 times thread pitch)

t = plus tolerance for flange thickness (see para. 7.3)

t_f = minimum flange thickness (see applicable dimensional tables)

[1] This Annex is not a mandatory annex of ASME B16.5-2003 and is placed after the main text for information.

[2] The equations used in this Annex are for calculated bolt lengths established to ensure full thread engagement of heavy hexagon nuts when worst case tolerances occur on all relevant dimensions of the flanged joint. The use of shorter bolt lengths is acceptable provided that full thread engagement is obtained at assembly (see para. 6.10.2).

Copyright ASME International
Provided by IHS under license with ASME
No reproduction or networking permitted without license from IHS
Not for Resale

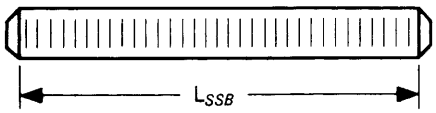

Fig.D1 Specified Stud Bolt Length

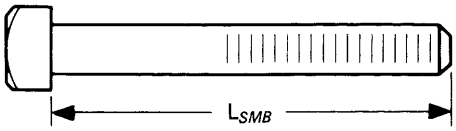

Fig. D2 Specified Machine Bolt Length

Table D1 *F* Values

	Total Height of Facings or Depth of Ring Joint Groove for Both Flanges, *F*, mm (in.)			
	Type of Flange Facing [Note (1)]			
Class	2 mm Raised 0.06 in.	7 mm Raised 0.25 in.	Male and Female or Tongue and Groove	Ring Joint
150 and 300	4 mm (0.12)	14 mm (0.50)	7 mm (0.25)	2 × groove depth
400 to 2500	4 mm (0.12)	14 mm (0.50)	7 mm (0.25)	2 × groove depth

NOTE:
(1) See Fig. 8 (Fig. F8 of Annex F) and Tables 4 and 5 (Tables F4 and F5 of Annex F).

Table D2 *n* Values

Dimensions	Negative Tolerance on Bolt Lengths, *n*, mm (in.)	Length, mm (in.)
Stud Bolt		
A		
or	1.5 (0.06)	
[*A* + (pipe thickness) for each lap)]	3.0 (0.12)	≤305 (≤12)
or		
[*A* − *F* + (Table D3 thickness)]	7.0 (0.25)	>305 (>12), ≤460 (≤18)
		>460 (>18)
Machine Bolt		
B		
or		
[*B* + (pipe thickness for each lap)]	For *n* values, use negative length	
or	tolerances per ASME B18.2.1.	
[*B* − *F* + (Table D3 thickness)]		. . .

Table D3 Thickness for Lapped Joints

Lap Combination	Classes 150 Through 2500 Flanges
For lapped to 2 mm (0.06 in.) male face on flange	One lap and 2 mm (0.06 in.)
For lapped to lapped	Both laps
For lapped to 7 mm (0.25 in.) male face on flange	One lap and 7 mm (0.25 in.)
For lapped to female face on flange	One lap not less than 7 mm (0.25 in.)
For male in lap to female in lap	2 × pipe wall with lap for male not less than 7 mm (0.25 in.)

Copyright ASME International
Provided by IHS under license with ASME
No reproduction or networking permitted without license from IHS
Not for Resale

ANNEX E
QUALITY SYSTEM PROGRAM[1]

The products manufactured in accordance with this Standard shall be produced under a quality system program following the principles of an appropriate standard from the ISO 9000 series.[2] A determination of the need for registration and/or certification of the product manufacturer's quality system program by an independent organization shall be the responsibility of the manufacturer. The detailed documentation demonstrating program compliance shall be available to the purchaser at the manufacturer's facility. A written summary description of the program utilized by the product manufacturer shall be available to the purchaser upon request. The product manufacturer is defined as the entity whose name or trademark appears on the product in accordance with the marking or identification requirements of this Standard.

[1] This Annex is an integral part of ASME B16.5-2003, and is placed after the main text for convenience.

[2] The series is also available from the American National Standards Institute (ANSI) and the American Society for Quality Control (ASQC) as American National Standards that are identified by a prefix "Q", replacing the prefix "ISO." Each standard of the series is listed under Annex H, References.

Copyright ASME International
Provided by IHS under license with ASME
No reproduction or networking permitted without license from IHS
Not for Resale

ANNEX F
PRESSURE–TEMPERATURE RATINGS AND DIMENSIONAL DATA FOR CLASSES 150, 300, 400, 600, 900, 1500, AND 2500 FLANGES AND CLASSES 150 AND 300 FLANGED FITTINGS IN U.S. CUSTOMARY UNITS

This Annex is an integral part of ASME B16.5-2003, and is placed after the main text for convenience.

The pressure–temperature ratings for the materials listed in Table 1A and covered by this Standard, are as listed in Tables 2-1.1 through 2-3.17 and Tables F2-1.1 through F2-3.17 of of this Annex.

Tables 2-1.1 through 2-3.17 have pressure–temperature ratings using bar units for pressure (1 bar = 100 kPa) and degrees Celsius units for temperature.

Tables F2-1.1 through F2-3.17 of Annex F have coterminous pressure–temperature ratings using psi units for pressure and degrees Fahrenheit units for temperature.

All tabulated pressures are gage pressures.

Other tables and figures included in this Annex provide dimensional data in U.S. Customary units for the following:

(a) Classes 150, 300, 400, 600, 900, 1500, and 2500 flanges

(b) Classes 150 and 300 flanged fittings

Annex G includes dimensional data for Classes 400, 600, 900, 1500, and 2500 flanged fittings for information.

Copyright ASME International
Provided by IHS under license with ASME
No reproduction or networking permitted without license from IHS
Not for Resale

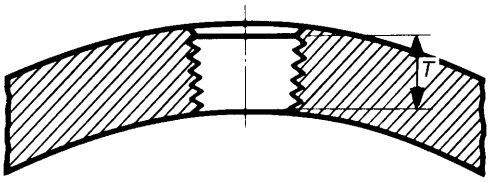

Connection Size, NPS	3/8	1/2	3/4	1	1 1/4	1 1/2	2
Thread length *T*, in. [Note (1)]	0.41	0.53	0.55	0.68	0.71	0.72	0.76

GENERAL NOTE: See paras. 6.12.2, 6.12.5, and 6.12.6.

NOTE:

(1) In no case shall the effective length of thread *T* be less than that shown in the table above. These lengths are equal to the effective thread length of external pipe threads (ASME B1.20.1).

Fig. F3 Thread for Connection Tapping

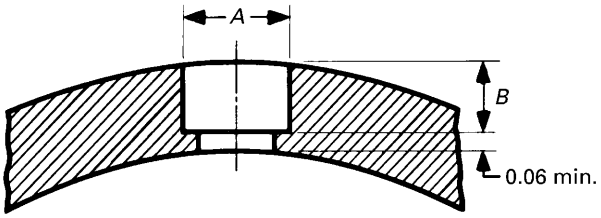

Connection Size, NPS	3/8	1/2	3/4	1	1 1/4	1 1/2	2
Minimum diameter of socket *A*, in.	0.69	0.86	1.06	1.33	1.68	1.92	2.41
Minimum depth *B*, in.	0.19	0.19	0.25	0.25	0.25	0.25	0.31

GENERAL NOTE: See paras. 6.12.3, 6.12.5, and 6.12.6.

Fig. F4 Socket Welding for Connections

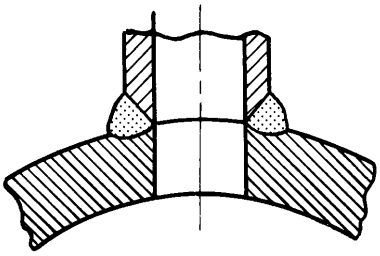

GENERAL NOTE: See paras. 6.12.4 and 6.12.5.

Fig. F5 Butt Welding for Connections

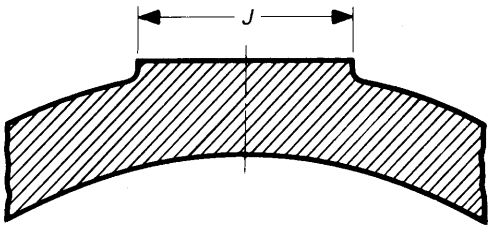

Connection Size, NPS	3/8	1/2	3/4	1	1 1/4	1 1/2	2
Minimum boss diameter *J*, in.	1.25	1.50	1.75	2.12	2.50	2.75	3.38

GENERAL NOTE: See para. 6.12.5.

Fig. F6 Bosses for Connections

Copyright ASME International
Provided by IHS under license with ASME
No reproduction or networking permitted without license from IHS
Not for Resale

END FLANGE FACINGS
Flange Thickness and Center-to-End Dimensions
Classes 150 through 2500

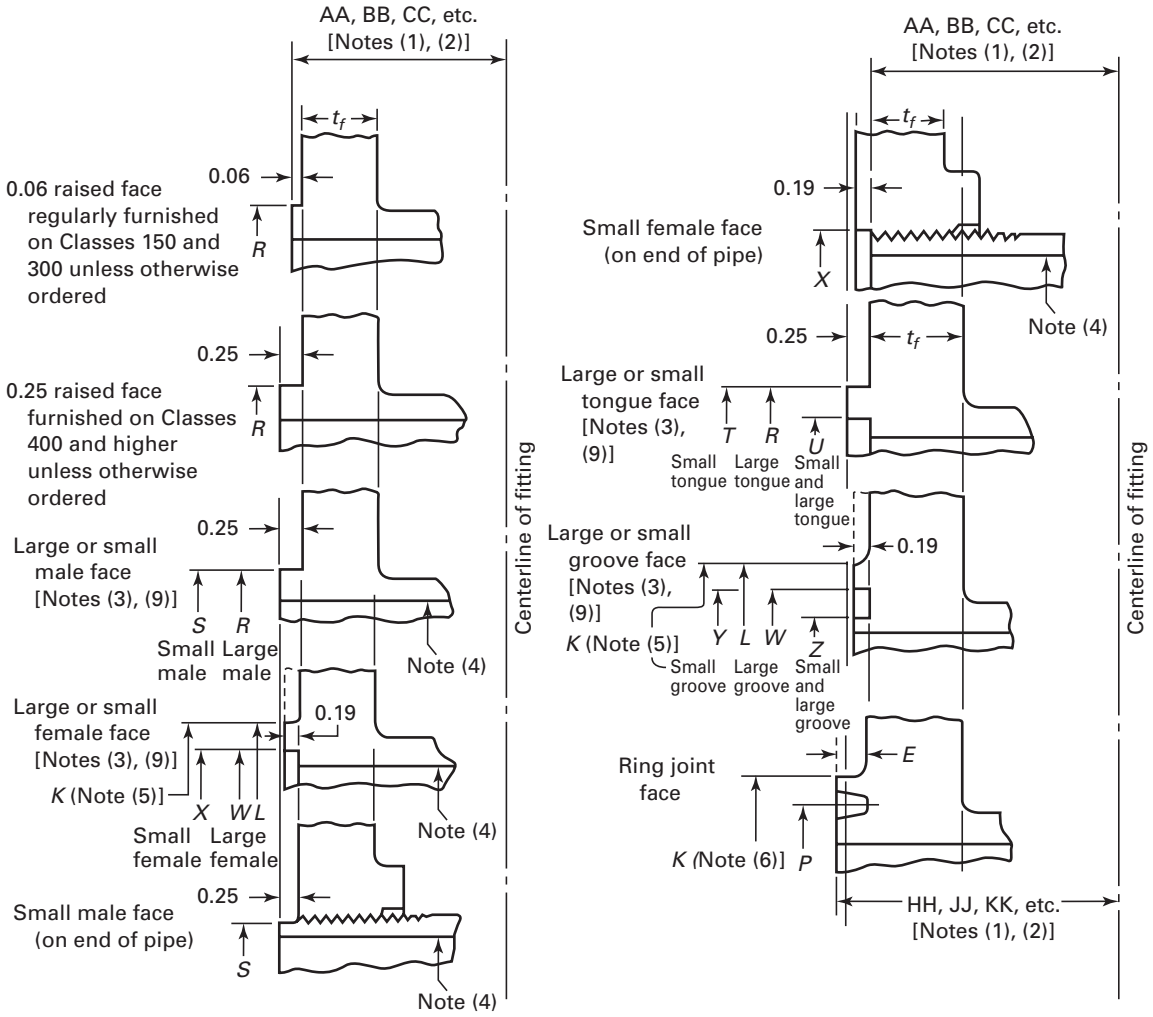

Fig. F7 End Flange Facings and Their Relationship to Flange Thickness and Center-to-End and End-to-End Dimensions

Copyright ASME International
Provided by IHS under license with ASME
No reproduction or networking permitted without license from IHS
Not for Resale

END FLANGE FACINGS
Flange Thickness and End-to-End Dimensions
Lapped Joints

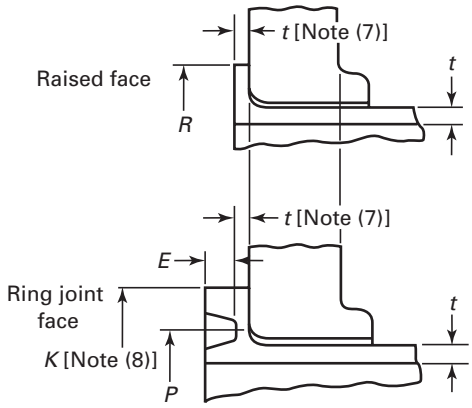

GENERAL NOTE: Dimensions are in inches. For dimensions in millimeters, refer to Fig. 7.

NOTES:

(1) See paras. 6.2 and 6.4.
(2) See Tables F7 through F22.
(3) See Table F4 for dimensions of facings (other than ring joint) and Table F5 for ring joint facing.
(4) For small male and female joints, care should be taken in the use of these dimensions to insure that the inside diameter of fitting of pipe is small enough to permit sufficient bearing surface to prevent crushing of the gasket (See Table F4.). This applies particularly on lines where the joint is made on the end of the pipe. Threaded companion flanges for small male and female joints are furnished with plain face and are threaded with American National Standard Locknut Thread (NPSL).
(5) See Table F4.
(6) See Table F5.
(7) See para. 6.4.3.
(8) See para. 6.4.3.5 and Table F5.
(9) Large male and female faces and large tongue and groove are not applicable to Class 150 because of potential dimensional conflicts.

Fig. F7 End Flange Facings and Their Relationship to Flange Thickness and Center-to-End and End-to-End Dimensions (Cont'd)

Copyright ASME International
Provided by IHS under license with ASME
No reproduction or networking permitted without license from IHS
Not for Resale

WELDING ENDS
(Welding Neck Flanges, No Backing Rings)

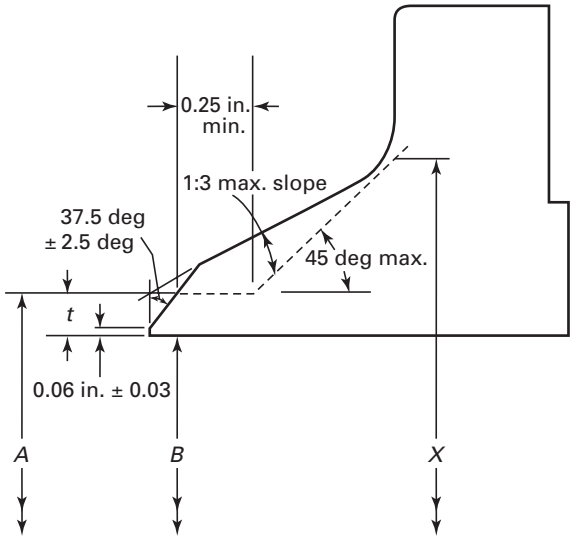

A = nominal outside diameter of pipe
B = nominal inside diameter of pipe
t = nominal wall thickness of pipe

GENERAL NOTES:

(a) Dimensions are in inches. For dimensions in millimeters, refer to Figs. 8 and 9.
(b) See paras. 6.7, 6.8, and 7.4 for details and tolerances.
(c) See Figs. F10 and F11 for additional details of welding ends.
(d) When the thickness of the hub at the bevel is greater than that of the pipe to which the flange is joined and the additional thickness is provided on the outside diameter, a taper weld having a slope not exceeding 1 to 3 may be employed or, alternatively, the greater outside diameter may be tapered at the same maximum slope or less, from a point on the welding bevel equal to the outside diameter of the mating pipe. Similarly, when the greater thickness is provided on the inside of the flange, it shall be taper-bored from the welding end at a slope not exceeding 1 to 3. When flanges covered by this Standard are intended for services with light wall, higher strength pipe, the thickness of the hub at the bevel may be greater than that of the pipe to which the flange is joined. Under these conditions, a single taper hub may be provided, and the outside diameter of the hub at the base (dimension *X*) may also be modified. The additional thickness may be provided on either inside or outside or partially on each side, but the total additional thickness shall not exceed one-half times the nominal wall thickness of intended mating pipe. See Figs. 12, 13, and 14.
(e) The hub transition from the *A* diameter to the *X* diameter shall fall within the maximum and minimum envelope outlined by the 1:3 max. slope and the dashed line.
(f) For welding end dimensions, refer to ASME B16.25

Fig. F8 Bevel for Wall Thicknesses *t* from 0.19 in. to 0.88 in. Inclusive

WELDING ENDS
(Welding Neck Flanges, No Backing Rings)

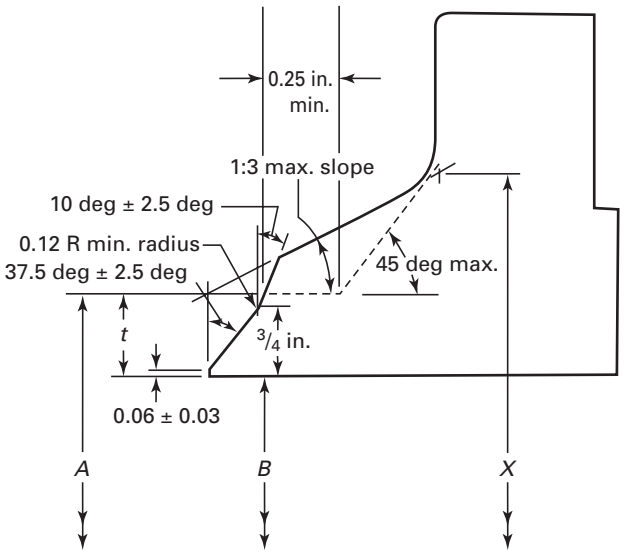

A = nominal outside diameter of pipe
B = nominal inside diameter of pipe
t = nominal wall thickness of pipe

GENERAL NOTE: Please see General Notes for Fig. F8.

Fig. F9 Bevel for Wall Thicknesses *t* Greater Than 0.88 in.

Copyright ASME International
Provided by IHS under license with ASME
No reproduction or networking permitted without license from IHS
Not for Resale

WELDING ENDS
(Welding Neck Flanges)

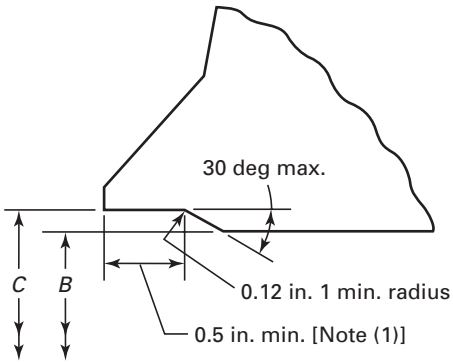

A = nominal outside diameter of welding end, in.
B = nominal inside diameter of pipe ($-A - 2t$), in.
C = $A - 0.031 - 1.75t - 0.010$ in.
T = nominal wall thickness of pipe
0.031 in. = minus tolerance on outside diameter of pipe to ASTM A 106, etc.
$1.75t$ = $87\frac{1}{2}$% of nominal wall (permitted by ASTM A 106, etc.) multiplied by two to convert into terms of diameter
0.010 in. = plus tolerance on diameter C. See para. 7.5.3.

GENERAL NOTES:
(a) Dimensions are in inches. For dimensions in millimeters, refer to Figs. 10 and 11.
(b) See paras. 6.7, 6.8, and 7.5 for details and tolerances.
(c) See Figs. F8 and F9 for welding end details of welding neck flanges.
(d) For dimensions, see ASME B16.25.

NOTE:
(1) 0.5 in. depth based on use of 0.75-in. wide backing ring.

Fig. F10 Inside Contour for Use With Rectangular Backing Ring

WELDING ENDS
(Welding Neck Flanges)

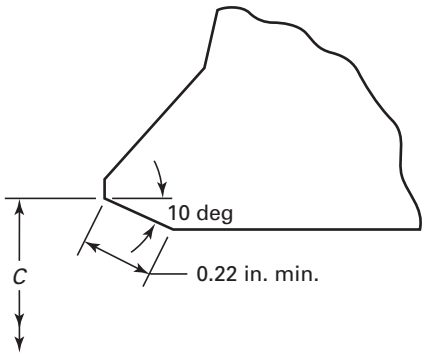

A = nominal outside diameter of welding end, in.
B = nominal inside diameter of pipe ($-A - 2t$), in.
C = $A - 0.031 - 1.75t - 0.010$ in.
T = nominal wall thickness of pipe
0.031 in. = minus tolerance on outside diameter of pipe to ASTM A 106, etc.
$1.75t$ = $87\frac{1}{2}$% of nominal wall (permitted by ASTM A 106, etc.) multiplied by two to convert into terms of diameter
0.010 in. = plus tolerance on diameter C. See para. 7.5.3.

GENERAL NOTES:
(a) Dimensions are in inches. For dimensions in millimeters, refer to Figs. 10 and 11.
(b) 0.5 in. depth based on use of 0.75-in. wide backing ring.
(c) See Figs 6.7, 6.8, and 7.5 for details and tolerances.
(d) See Figs. F8 and F9 for welding end details of welding neck flanges.
(e) For dimensions, see ASME B16.25.

Fig. F11 Inside Contour for Use With Taper Backing Ring

Copyright ASME International
Provided by IHS under license with ASME
No reproduction or networking permitted without license from IHS
Not for Resale

Table F2-1.1 Pressure–Temperature Ratings for Group 1.1 Materials

Nominal Designation	Forgings	Castings	Plates
C–Si	A 105 (1)	A 216 Gr. WCB (1)	A 515 Gr. 70 (1)
C–Mn–Si	A 350 Gr. LF2 (1)		A 516 Gr. 70 (1), (2)
C–Mn–Si–V	A 350 Gr. LF6 Cl. 1 (4)		A 537 Cl. 1 (3)
$3\frac{1}{2}$Ni	A 350 Gr. LF 3		

	Working Pressures by Classes, psig						
Class Temp., °F	150	300	400	600	900	1500	2500
–20 to 100	285	740	985	1480	2220	3705	6170
200	260	680	905	1360	2035	3395	5655
300	230	655	870	1310	1965	3270	5450
400	200	635	845	1265	1900	3170	5280
500	170	605	805	1205	1810	3015	5025
600	140	570	755	1135	1705	2840	4730
650	125	550	730	1100	1650	2745	4575
700	110	530	710	1060	1590	2655	4425
750	95	505	675	1015	1520	2535	4230
800	80	410	550	825	1235	2055	3430
850	65	320	425	640	955	1595	2655
900	50	230	305	460	690	1150	1915
950	35	135	185	275	410	685	1145
1000	20	85	115	170	255	430	715

NOTES:
(1) Upon prolonged exposure to temperatures above 800°F, the carbide phase of steel may be converted to graphite. Permissible, but not recommended for prolonged use above 800°F.
(2) Not to be used over 850°F.
(3) Not to be used over 700°F.
(4) Not to be used over 500°F.

Copyright ASME International
Provided by IHS under license with ASME
No reproduction or networking permitted without license from IHS
Not for Resale

Table F2-1.2 Pressure–Temperature Ratings for Group 1.2 Materials

Nominal Designation	Forgings	Castings	Plates
C–Mn–Si		A 216 Gr. WCC (1) A 352 Gr. LCC (2)	
C–Mn–Si–V	A 350 Gr. LF6 Cl. 2 (3)		
$2\frac{1}{2}$Ni		A 352 Gr. LC2	A 203 Gr. B (1)
$3\frac{1}{2}$Ni		A 352 Gr. LC3	A 203 Gr. E (1)

	Working Pressures by Classes, psig						
Class Temp., °F	150	300	400	600	900	1500	2500
–20 to 100	290	750	1000	1500	2250	3750	6250
200	260	750	1000	1500	2250	3750	6250
300	230	730	970	1455	2185	3640	6070
400	200	705	940	1405	2110	3520	5865
500	170	665	885	1330	1995	3325	5540
600	140	605	805	1210	1815	3025	5040
650	125	590	785	1175	1765	2940	4905
700	110	555	740	1110	1665	2775	4630
750	95	505	675	1015	1520	2535	4230
800	80	410	550	825	1235	2055	3430
850	65	320	425	640	955	1595	2655
900	50	225	295	445	670	1115	1855
950	35	135	185	275	410	685	1145
1000	20	85	115	170	255	430	715

NOTES:
(1) Upon prolonged exposure to temperatures above 800°F, the carbide phase of steel may be converted to graphite. Permissible, but not recommended for prolonged use above 800°F.
(2) Not to be used over 650°F
(3) Not to be used over 500°F.

Copyright ASME International
Provided by IHS under license with ASME
No reproduction or networking permitted without license from IHS Not for Resale

Table F2-1.3 Pressure–Temperature Ratings for Group 1.3 Materials

Nominal Designation	Forgings	Castings	Plates
C–Si		A 352 Gr. LCB (3)	A 515 Gr. 65 (1)
C–Mn–Si			A 516 Gr. 65 (1), (2)
C–½Mo		A 217 Gr. WC1 (4), (5) A 352 Gr. LC1 (3)	
2½Ni			A 203 Gr. A (1)
3½Ni			A 203 Gr. D (1)

	Working Pressures by Classes, psig						
Class Temp., °F	150	300	400	600	900	1500	2500
–20 to 100	265	695	930	1395	2090	3480	5805
200	255	660	880	1320	1980	3300	5505
300	230	640	850	1275	1915	3190	5315
400	200	615	820	1230	1845	3075	5125
500	170	585	780	1175	1760	2930	4885
600	140	550	735	1105	1655	2755	4595
650	125	535	710	1065	1600	2665	4440
700	110	510	685	1025	1535	2560	4270
750	95	475	635	955	1430	2385	3970
800	80	390	520	780	1175	1955	3255
850	65	300	400	595	895	1490	2485
900	50	200	270	405	605	1010	1685
950	35	135	185	275	410	685	1145
1000	20	85	115	170	255	430	715

NOTES:

(1) Upon prolonged exposure to temperatures above 800°F, the carbide phase of steel may be converted to graphite. Permissible, but not recommended for prolonged use above 800°F.

(2) Not to be used over 850°F

(3) Not to be used over 650°F.

(4) Upon prolonged exposure to temperatures above 875°F, the carbide phase of steel may be converted to graphite. Permissible, but not recommended for prolonged use above 875°F.

(5) Use normalized and tempered matrial only.

Copyright ASME International
Provided by IHS under license with ASME
No reproduction or networking permitted without license from IHS Not for Resale

Table F2-1.4 Pressure–Temperature Ratings for Group 1.4 Materials

Nominal Designation	Forgings	Castings	Plates
C–Si			A 515 Gr. 60 (1)
C–Mn–Si	A 350 Gr. LF1, Cl.1 (1)		A 516 Gr. 60 (1), (2)

	Working Pressures by Classes, psig						
Class Temp., °F	150	300	400	600	900	1500	2500
–20 to 100	235	615	825	1235	1850	3085	5145
200	215	565	755	1130	1695	2830	4715
300	210	545	725	1090	1635	2725	4545
400	200	525	700	1055	1580	2635	4390
500	170	500	670	1005	1505	2510	4185
600	140	475	630	945	1420	2365	3945
650	125	455	610	915	1370	2285	3805
700	110	440	590	885	1325	2210	3685
750	95	430	570	855	1285	2140	3565
800	80	370	495	740	1110	1850	3085
850	65	300	400	595	895	1490	2485
900	50	170	230	345	515	855	1430
950	35	135	185	275	410	685	1145
1000	20	85	115	170	255	430	715

NOTES:

(1) Upon prolonged exposure to temperatures above 800°F, the carbide phase of steel may be converted to graphite. Permissible, but not recommended for prolonged use above 800°F.

(2) Not to be used over 850°F.

Copyright ASME International
Provided by IHS under license with ASME
No reproduction or networking permitted without license from IHS
Not for Resale

Table F2-1.5 Pressure–Temperature Ratings for Group 1.5 Materials

Nominal Designation	Forgings	Castings	Plates
C–½Mo	A 182 Gr. F1 (1)		A 204 Gr. A (1) A 204 Gr. B (1)

	Working Pressures by Classes, psig						
Class Temp., °F	150	300	400	600	900	1500	2500
–20 to 100	265	695	930	1395	2090	3480	5805
200	260	695	930	1395	2090	3480	5805
300	230	685	915	1375	2060	3435	5725
400	200	660	885	1325	1985	3310	5520
500	170	640	855	1285	1925	3210	5350
600	140	605	805	1210	1815	3025	5040
650	125	590	785	1175	1765	2940	4905
700	110	570	755	1135	1705	2840	4730
750	95	530	710	1065	1595	2660	4430
800	80	510	675	1015	1525	2540	4230
850	65	485	650	975	1460	2435	4060
900	50	450	600	900	1350	2245	3745
950	35	280	375	560	845	1405	2345
1000	20	165	220	330	495	825	1370

NOTE:

(1) Upon prolonged exposure to temperatures above 875°F, the carbide phase of carbon–molybdenum steel may be converted to graphite. Permissible, but not recommended for prolonged use above 875°F.

Copyright ASME International
Provided by IHS under license with ASME
No reproduction or networking permitted without license from IHS Not for Resale

Table F2-1.7 Pressure–Temperature Ratings for Group 1.7 Materials

Nominal Designation	Forgings	Castings	Plates
1/2Cr–1/2Mo	A 182 Gr. F2 (1)		
Ni–1/2Cr–1/2Mo		A 217 Gr. WC4 (1), (2)	
3/4Ni–3/4Cr–1Mo		A 217 Gr. WC5 (2)	

	Working Pressures by Classes, psig						
Class Temp., °F	150	300	400	600	900	1500	2500
–20 to 100	290	750	1000	1500	2250	3750	6250
200	260	750	1000	1500	2250	3750	6250
300	230	730	970	1455	2185	3640	6070
400	200	705	940	1410	2115	3530	5880
500	170	665	885	1330	1995	3325	5540
600	140	605	805	1210	1815	3025	5040
650	125	590	785	1175	1765	2940	4905
700	110	570	755	1135	1705	2840	4730
750	95	530	710	1065	1595	2660	4430
800	80	510	675	1015	1525	2540	4230
850	65	485	650	975	1460	2435	4060
900	50	450	600	900	1350	2245	3745
950	35	315	420	630	945	1575	2630
1000	20	200	270	405	605	1010	1685
1050	. . .	160	210	315	475	790	1315

NOTES:
(1) Not to be used over 1000°F.
(2) Use normalized and tempered material only.

Copyright ASME International
Provided by IHS under license with ASME
No reproduction or networking permitted without license from IHS
Not for Resale

Table F2-1.9 Pressure–Temperature Ratings for Group 1.9 Materials

Nominal Designation	Forgings	Castings	Plates
$1\frac{1}{4}$Cr–$\frac{1}{2}$Mo		A 217 Gr. WC6 (1), (3)	
$1\frac{1}{4}$Cr–$\frac{1}{2}$Mo–Si	A 182 Gr. F11 Cl. 2 (1), (2)		A 387 Gr. 11 Cl. 2 (2)

	Working Pressures by Classes, psig						
Class Temp., °F	150	300	400	600	900	1500	2500
–20 to 100	290	750	1000	1500	2250	3750	6250
200	260	750	1000	1500	2250	3750	6250
300	230	720	965	1445	2165	3610	6015
400	200	695	925	1385	2080	3465	5775
500	170	665	885	1330	1995	3325	5540
600	140	605	805	1210	1815	3025	5040
650	125	590	785	1175	1765	2940	4905
700	110	570	755	1135	1705	2840	4730
750	95	530	710	1065	1595	2660	4430
800	80	510	675	1015	1525	2540	4230
850	65	485	650	975	1460	2435	4060
900	50	450	600	900	1350	2245	3745
950	35	320	425	640	955	1595	2655
1000	20	215	290	430	650	1080	1800
1050	. . .	145	190	290	430	720	1200
1100	. . .	95	130	190	290	480	800
1150	. . .	65	85	130	195	325	545
1200	. . .	40	55	80	125	205	345

NOTES:
(1) Use normalized and tempered material only.
(2) Permissible, but not recommended for prolonged use above 1100°F.
(3) Not to be used over 1100°F.

Copyright ASME International
Provided by IHS under license with ASME
No reproduction or networking permitted without license from IHS Not for Resale

Table F2-1.10 Pressure–Temperature Ratings for Group 1.10 Materials

Nominal Designation	Forgings	Castings	Plates			
$2\frac{1}{4}$Cr–1Mo	A 182 Gr. F22 Cl. 3 (1)	A 217 Gr. WC9 (2), (3)	A 387 Gr. 22 Cl. 2 (1)			
	Working Pressures by Classes, psig					
Class Temp., °F	150	300	400	600	900	1500	2500
–20 to 100	290	750	1000	1500	2250	3750	6250
200	260	750	1000	1500	2250	3750	6250
300	230	730	970	1455	2185	3640	6070
400	200	705	940	1410	2115	3530	5880
500	170	665	885	1330	1995	3325	5540
600	140	605	805	1210	1815	3025	5040
650	125	590	785	1175	1765	2940	4905
700	110	570	755	1135	1705	2840	4730
750	95	530	710	1065	1595	2660	4430
800	80	510	675	1015	1525	2540	4230
850	65	485	650	975	1460	2435	4060
900	50	450	600	900	1350	2245	3745
950	35	385	515	775	1160	1930	3220
1000	20	265	355	535	800	1335	2230
1050	...	175	235	350	525	875	1455
1100	...	110	145	220	330	550	915
1150	...	70	90	135	205	345	570
1200	...	40	55	80	125	205	345

NOTES:
(1) Permissible. but not recommended for prolonged use above 1100°F.
(2) Use normalized and tempered material only.
(3) Not to be used over 1100°F.

--`,,```,,,,````-`-`,,`,,`,`,,`---
Copyright ASME International
Provided by IHS under license with ASME
No reproduction or networking permitted without license from IHS
Not for Resale

Table F2-1.11 Pressure–Temperature Ratings for Group 1.11 Materials

Nominal Designation	Forgings		Castings			Plates
C–½Mo						A 204, Gr. C (1)
	Working Pressures by Classes, psig					
Class Temp., °F	150	300	400	600	900	1500	2500
–20 to 100	290	750	1000	1500	2250	3750	6250
200	260	750	1000	1500	2250	3750	6250
300	230	730	970	1455	2185	3640	6070
400	200	705	940	1410	2115	3530	5880
500	170	665	885	1330	1995	3325	5540
600	140	605	805	1210	1815	3025	5040
650	125	590	785	1175	1765	2940	4905
700	110	570	755	1135	1705	2840	4730
750	95	530	710	1065	1595	2660	4430
800	80	510	675	1015	1525	2540	4230
850	65	485	650	975	1460	2435	4060
900	50	450	600	900	1345	2245	3745
950	35	280	375	560	845	1405	2345
1000	20	165	220	330	495	825	1370
1050	. . .	165	220	330	495	825	1370
1100	. . .	110	145	220	330	550	915
1150	. . .	80	110	165	245	410	685
1200	. . .	45	60	90	135	225	370

NOTE:

(1) Upon prolonged exposure to temperatures above 875°F, the carbide phase of carbon-molybdenum steel may be converted to graphite. Permissible, but not recommended for prolonged use above 875°F.

Copyright ASME International
Provided by IHS under license with ASME
No reproduction or networking permitted without license from IHS Not for Resale

Table F2-1.13 Pressure–Temperature Ratings for Group 1.13 Materials

Nominal Designation	Forgings	Castings	Plates
5Cr–½Mo	A 182 Gr. F5a	A 217 Gr. C5 (1)	

	Working Pressures by Classes, psig						
Class Temp., °F	150	300	400	600	900	1500	2500
–20 to 100	290	750	1000	1500	2250	3750	6250
200	260	750	1000	1500	2250	3750	6250
300	230	730	970	1455	2185	3640	6070
400	200	705	940	1410	2115	3530	5880
500	170	665	885	1330	1995	3325	5540
600	140	605	805	1210	1815	3025	5040
650	125	590	785	1175	1765	2940	4905
700	110	570	755	1135	1705	2840	4730
750	95	530	710	1065	1595	2660	4430
800	80	510	675	1015	1525	2540	4230
850	65	485	650	975	1460	2435	4060
900	50	375	500	745	1120	1870	3115
950	35	275	365	550	825	1370	2285
1000	20	200	265	400	595	995	1655
1050	...	145	190	290	430	720	1200
1100	...	100	135	200	300	495	830
1150	...	60	80	125	185	310	515
1200	...	35	45	70	105	170	285

NOTE:
(1) Use normalized and tempered material only.

Copyright ASME International
Provided by IHS under license with ASME
No reproduction or networking permitted without license from IHS
Not for Resale

Table F2-1.14 Pressure–Temperature Ratings for Group 1.14 Materials

Nominal Designation	Forgings	Castings	Plates
9Cr–1Mo	A 182 Gr. F9	A 217 Gr. C12 (1)	

	Working Pressures by Classes, psig						
Class Temp., °F	150	300	400	600	900	1500	2500
–20 to 100	290	750	1000	1500	2250	3750	6250
200	260	750	1000	1500	2250	3750	6250
300	230	730	970	1455	2185	3640	6070
400	200	705	940	1410	2115	3530	5880
500	170	665	885	1330	1995	3325	5540
600	140	605	805	1210	1815	3025	5040
650	125	590	785	1175	1765	2940	4905
700	110	570	755	1135	1705	2840	4730
750	95	530	710	1065	1595	2660	4430
800	80	510	675	1015	1525	2540	4230
850	65	485	650	975	1460	2435	4060
900	50	450	600	900	1350	2245	3745
950	35	375	505	755	1130	1885	3145
1000	20	255	340	505	760	1270	2115
1050	. . .	170	230	345	515	855	1430
1100	. . .	115	150	225	340	565	945
1150	. . .	75	100	150	225	375	630
1200	. . .	50	70	105	155	255	430

NOTE:
(1) Use normalized and tempered material only.

Copyright ASME International
Provided by IHS under license with ASME
No reproduction or networking permitted without license from IHS Not for Resale

Table F2-1.15 Pressure–Temperature Ratings for Group 1.15 Materials

Nominal Designation	Forgings	Castings	Plates
9Cr–1Mo–V	A 182 Gr. F91	A 217 Gr. C12 A	A 387 Gr. 91 Cl. 2

	Working Pressures by Classes, psig						
Class Temp., °F	150	300	400	600	900	1500	2500
–20 to 100	290	750	1000	1500	2250	3750	6250
200	260	750	1000	1500	2250	3750	6250
300	230	730	970	1455	2185	3640	6070
400	200	705	940	1410	2115	3530	5880
500	170	665	885	1330	1995	3325	5540
600	140	605	805	1210	1815	3025	5040
650	125	590	785	1175	1765	2940	4905
700	110	570	755	1135	1705	2840	4730
750	95	530	710	1065	1595	2660	4430
800	80	510	675	1015	1525	2540	4230
850	65	485	650	975	1460	2435	4060
900	50	450	600	900	1350	2245	3745
950	35	385	515	775	1160	1930	3220
1000	20	365	485	725	1090	1820	3030
1050	...	360	480	720	1080	1800	3000
1100	...	300	400	605	905	1510	2515
1150	...	225	295	445	670	1115	1855
1200	...	145	190	290	430	720	1200

Copyright ASME International
Provided by IHS under license with ASME
No reproduction or networking permitted without license from IHS
Not for Resale

Table F2-1.17 Pressure–Temperature Ratings for Group 1.17 Materials

Nominal Designation	Forgings	Castings	Plates
1Cr–½Mo	A 182 Gr. F12 Cl. 2 (1), (2)		
5Cr–½	A 182 Gr. F5		

	Working Pressures by Classes, psig						
Class Temp., °F	150	300	400	600	900	1500	2500
–20 to 100	290	750	1000	1500	2250	3750	6250
200	260	735	980	1470	2210	3680	6135
300	230	700	935	1400	2100	3495	5830
400	200	670	890	1335	2005	3345	5570
500	170	645	860	1290	1940	3230	5385
600	140	605	805	1210	1815	3025	5040
650	125	590	785	1175	1765	2940	4905
700	110	570	755	1135	1705	2840	4730
750	95	530	710	1065	1595	2660	4430
800	80	510	675	1015	1525	2540	4230
850	65	485	650	975	1460	2435	4060
900	50	375	500	745	1120	1870	3115
950	35	275	365	550	825	1370	2285
1000	20	200	265	400	595	995	1655
1050	. . .	145	190	290	430	720	1200
1100	. . .	95	130	190	290	480	800
1150	. . .	60	80	125	185	310	515
1200	. . .	35	45	70	105	170	285

NOTES:

(1) Use normalized and tempered material only.

(2) Permissible, but not recommended for prolonged use above 1100°F.

Copyright ASME International
Provided by IHS under license with ASME
No reproduction or networking permitted without license from IHS Not for Resale

Table F2-2.1 Pressure–Temperature Ratings for Group 2.1 Materials

Nominal Designation	Forgings	Castings	Plates
18Cr–8Ni	A 182 Gr. F304 (1)	A 351 Gr. CF3 (2)	A 240 Gr. 304 (1)
	A 182 Gr. F304H	A 351 Gr. CF8 (1)	A 240 Gr. 304H

	Working Pressures by Classes, psig						
Class Temp., °F	150	300	400	600	900	1500	2500
–20 to 100	275	720	960	1440	2160	3600	6000
200	230	600	800	1200	1800	3000	5000
300	205	540	715	1075	1615	2690	4480
400	190	495	660	995	1490	2485	4140
500	170	465	620	930	1395	2330	3880
600	140	440	590	885	1325	2210	3680
650	125	430	575	865	1295	2160	3600
700	110	420	565	845	1265	2110	3520
750	95	415	550	825	1240	2065	3440
800	80	405	540	810	1215	2030	3380
850	65	395	530	790	1190	1980	3300
900	50	390	520	780	1165	1945	3240
950	35	380	510	765	1145	1910	3180
1000	20	355	470	710	1065	1770	2950
1050	...	325	435	650	975	1630	2715
1100	...	255	345	515	770	1285	2145
1150	...	205	275	410	615	1030	1715
1200	...	165	220	330	495	825	1370
1250	...	135	180	265	400	670	1115
1300	...	115	150	225	340	565	945
1350	...	95	125	185	280	465	770
1400	...	75	100	150	225	380	630
1450	...	60	80	115	175	290	485
1500	...	40	55	85	125	205	345

NOTES:
(1) At temperatures over 1000°F, use only when the carbon content is 0.04% or higher.
(2) Not to be used over 800°F.

--`,,```,,,,````-`-`,,`,,`,`,,`---
Copyright ASME International
Provided by IHS under license with ASME
No reproduction or networking permitted without license from IHS
Not for Resale

Table F2-2.2 Pressure–Temperature Ratings for Group 2.2 Materials

Nominal Designation	Forgings	Castings	Plates
16Cr–12Ni–2Mo	A 182 Gr. F316 (1) A 182 Gr. F316H	A 351 Gr. CF3M (2) A 351 Gr. CF8M (1)	A 240 Gr. 316 (1) A 240 Gr. 316H
18Cr–13Ni–3Mo	A 182 Gr. F317 (1)		A 240 Gr. 317 (1)
19Cr–10Ni–3Mo		A 351 Gr. CG8M (3)	

	Working Pressures by Classes, psig						
Class Temp., °F	150	300	400	600	900	1500	2500
−20 to 100	275	720	960	1440	2160	3600	6000
200	235	620	825	1240	1860	3095	5160
300	215	560	745	1120	1680	2795	4660
400	195	515	685	1025	1540	2570	4280
500	170	480	635	955	1435	2390	3980
600	140	450	600	900	1355	2255	3760
650	125	440	590	885	1325	2210	3680
700	110	435	580	870	1305	2170	3620
750	95	425	570	855	1280	2135	3560
800	80	420	565	845	1265	2110	3520
850	65	420	555	835	1255	2090	3480
900	50	415	555	830	1245	2075	3460
950	35	385	515	775	1160	1930	3220
1000	20	365	485	725	1090	1820	3030
1050	...	360	480	720	1080	1800	3000
1100	...	305	405	610	915	1525	2545
1150	...	235	315	475	710	1185	1970
1200	...	185	245	370	555	925	1545
1250	...	145	195	295	440	735	1230
1300	...	115	155	235	350	585	970
1350	...	95	130	190	290	480	800
1400	...	75	100	150	225	380	630
1450	...	60	80	115	175	290	485
1500	...	40	55	85	125	205	345

NOTES:
(1) At temperatures over 1000°F, use only when the carbon content is 0.04% or higher.
(2) Not to be used over 850°F.
(3) Not to be used over 1000°F.

Copyright ASME International
Provided by IHS under license with ASME
No reproduction or networking permitted without license from IHS
Not for Resale

Table F2-2.3 Pressure–Temperature Ratings for Group 2.3 Materials

Nominal Designation	Forgings	Castings	Plates
16Cr–12Ni–2Mo	A 182 Gr. F316L		A 240 Gr. 316L
18Cr–8Ni	A 182 Gr. F304L (1)		A 240 Gr. 304L (1)

	Working Pressures by Classes, psig						
Class Temp., °F	150	300	400	600	900	1500	2500
–20 to 100	230	600	800	1200	1800	3000	5000
200	195	510	680	1020	1535	2555	4260
300	175	455	610	910	1370	2280	3800
400	160	420	560	840	1260	2100	3500
500	150	395	525	785	1180	1970	3280
600	140	370	495	745	1115	1860	3100
650	125	365	485	730	1095	1825	3040
700	110	360	480	720	1080	1800	3000
750	95	355	470	705	1060	1765	2940
800	80	345	460	690	1035	1730	2880
850	65	340	450	675	1015	1690	2820

NOTE:
(1) Not to be used over 800°F.

--`,,```,,,,````-`-`,,`,,`,`,,`---
Copyright ASME International
Provided by IHS under license with ASME
No reproduction or networking permitted without license from IHS
Not for Resale

Table F2-2.4 Pressure–Temperature Ratings for Group 2.4 Materials

Nominal Designation	Forgings	Castings	Plates
18Cr–10Ni–Ti	A 182 Gr. F321 (1) A 182 Gr. F321H (2)		A 240 Gr. 321 (1) A 240 Gr. 321H (2)

Class	Working Pressures by Classes, psig						
Temp., °F	150	300	400	600	900	1500	2500
–20 to 100	275	720	960	1440	2160	3600	6000
200	250	650	865	1295	1945	3240	5400
300	230	595	795	1190	1785	2975	4960
400	200	550	735	1105	1655	2760	4600
500	170	515	690	1030	1550	2580	4300
600	140	485	650	975	1460	2435	4060
650	125	475	635	950	1425	2375	3960
700	110	465	620	930	1395	2330	3880
750	95	460	610	915	1375	2290	3820
800	80	450	600	900	1355	2255	3760
850	65	445	595	895	1340	2230	3720
900	50	440	590	885	1325	2210	3680
950	35	385	515	775	1160	1930	3220
1000	20	365	485	725	1090	1820	3030
1050	. . .	360	480	720	1080	1800	3000
1100	. . .	310	415	625	935	1560	2600
1150	. . .	235	315	475	710	1185	1970
1200	. . .	185	245	370	555	925	1545
1250	. . .	140	185	280	420	705	1170
1300	. . .	110	145	220	330	550	915
1350	. . .	85	115	170	255	430	715
1400	. . .	65	85	130	195	325	545
1450	. . .	50	70	105	155	255	430
1500	. . .	40	50	75	115	190	315

NOTES:

(1) Not to be used over 1000°F.

(2) At temperatures over 1000°F, use only if the material is heat treated by heating to a minimum temperature of 2000°F.

Copyright ASME International
Provided by IHS under license with ASME
No reproduction or networking permitted without license from IHS
Not for Resale

Table F2-2.5 Pressure–Temperature Ratings for Group 2.5 Materials

Nominal Designation	Forgings	Castings	Plates
18Cr–10Ni–Cb	A 182 Gr. F347 (1) A 182 Gr. F347H (2) A 182 Gr. F348 (1) A 182 Gr. F348H (2)		A 240 Gr. 347 (1) A 240 Gr. 347H (2) A 240 Gr. 348 (1) A 240 Gr. 348H (2)

	Working Pressures by Classes, psig						
Class Temp., °F	150	300	400	600	900	1500	2500
–20 to 100	275	720	960	1440	2160	3600	6000
200	255	660	885	1325	1985	3310	5520
300	230	615	820	1235	1850	3085	5140
400	200	575	770	1150	1730	2880	4800
500	170	540	725	1085	1625	2710	4520
600	140	515	690	1030	1550	2580	4300
650	125	505	675	1015	1520	2530	4220
700	110	495	660	995	1490	2485	4140
750	95	490	655	985	1475	2460	4100
800	80	485	650	975	1460	2435	4060
850	65	485	645	970	1455	2425	4040
900	50	450	600	900	1350	2245	3745
950	35	385	515	775	1160	1930	3220
1000	20	365	485	725	1090	1820	3030
1050	...	360	480	720	1080	1800	3000
1100	...	325	430	645	965	1610	2685
1150	...	275	365	550	825	1370	2285
1200	...	205	275	410	620	1030	1715
1250	...	180	245	365	545	910	1515
1300	...	140	185	275	410	685	1145
1350	...	105	140	205	310	515	860
1400	...	75	100	150	225	380	630
1450	...	60	80	115	175	290	485
1500	...	40	55	85	125	205	345

NOTES:
(1) Not to be used over 1000°F.
(2) For temperatures over 1000°F use only if the material is heat treated by heating to a minimum temperature of 2000°F.

Copyright ASME International
Provided by IHS under license with ASME
No reproduction or networking permitted without license from IHS
Not for Resale

Table F2-2.6 Pressure–Temperature Ratings for Group 2.6 Materials

Nominal Designation	Forgings	Castings	Plates
23Cr–12Ni			A 240 Gr. 309H

	Working Pressures by Classes, psig						
Class Temp., °F	150	300	400	600	900	1500	2500
–20 to 100	275	720	960	1440	2160	3600	6000
200	240	630	840	1260	1895	3155	5260
300	225	580	775	1160	1740	2905	4840
400	200	545	725	1090	1635	2725	4540
500	170	520	690	1035	1555	2590	4320
600	140	500	665	1000	1500	2495	4160
650	125	490	655	985	1475	2460	4100
700	110	485	645	970	1455	2425	4040
750	95	480	640	960	1440	2400	4000
800	80	475	630	945	1420	2365	3940
850	65	465	620	930	1395	2330	3880
900	50	450	600	900	1350	2245	3745
950	35	385	515	775	1160	1930	3220
1000	20	365	485	725	1090	1820	3030
1050	...	355	470	705	1060	1765	2945
1100	...	260	345	520	780	1305	2170
1150		190	250	375	565	945	1570
1200	...	135	185	275	410	685	1145
1250	...	105	135	205	310	515	855
1300	...	75	100	150	225	375	630
1350	...	60	80	115	175	290	485
1400	...	45	60	90	135	225	370
1450	...	35	45	70	105	170	285
1500	...	25	35	50	75	130	215

Copyright ASME International
Provided by IHS under license with ASME
No reproduction or networking permitted without license from IHS
Not for Resale

Table F2-2.7 Pressure–Temperature Ratings for Group 2.7 Materials

Nominal Designation	Forgings		Castings			Plates	
25Cr–20Ni	A 182 Gr. F310 (1), (2)					A 240 Gr. 310H	
	Working Pressures by Classes, psig						
Class Temp., °F	150	300	400	600	900	1500	2500
–20 to 100	275	720	960	1440	2160	3600	6000
200	245	635	850	1270	1910	3180	5300
300	225	580	775	1160	1740	2905	4840
400	200	540	725	1085	1625	2710	4520
500	170	515	685	1025	1540	2570	4280
600	140	495	660	990	1485	2470	4120
650	125	485	645	970	1455	2425	4040
700	110	480	635	955	1435	2390	3980
750	95	470	625	940	1410	2350	3920
800	80	465	620	930	1395	2330	3880
850	65	460	610	915	1375	2290	3820
900	50	450	600	900	1350	2245	3745
950	35	385	515	775	1160	1930	3220
1000	20	365	485	725	1090	1820	3030
1050	...	355	470	705	1060	1765	2945
1100	...	260	345	520	780	1305	2170
1150	...	190	250	375	565	945	1570
1200	...	135	185	275	410	685	1145
1250	...	105	135	205	310	515	855
1300	...	75	100	150	225	375	630
1350	...	60	80	115	175	290	485
1400	...	45	60	90	135	225	370
1450	...	35	45	65	100	165	275
1500	...	25	35	50	75	130	215

NOTES:

(1) At temperatures over 1000°F, use only when the carbon content is 0.04% or higher.

(2) Service temperatures of 1050°F and above should be used only when assurance is provided that grain size is not finer than ASTM 6.

Copyright ASME International
Provided by IHS under license with ASME
No reproduction or networking permitted without license from IHS
Not for Resale

Table F2-2.8 Pressure–Temperature Ratings for Group 2.8 Materials

Nominal Designation	Forgings	Castings	Plates
20Cr–18Ni–6Mo	A 182 Gr. F44	A 351 Gr. CK3MCuN	A 240 Gr. S31254
22Cr–5Ni–3Mo–N	A 182 Gr. F51 (1)		A 240 Gr. S31803 (1)
25Cr–7Ni–4Mo–N	A 182 Gr. F53 (1)		A 240 Gr. S32750 (1)
24Cr–10Ni–4Mo–V		A 351 Gr. CE8MN (1)	
25Cr–5Ni–2Mo–3Cu		A 351 Gr. CD4MCu (1)	
25Cr–7Ni–3.5Mo–W–Cb		A 351 Gr. CD3MWCuN (1)	
25Cr–7Ni–3.5Mo–N–Cu–W	A 182 Gr. F55 (1)		A 240 Gr. S32760 (1)

	Working Pressures by Classes, psig						
Class Temp., °F	150	300	400	600	900	1500	2500
100	290	750	1000	1500	2250	3750	6250
200	260	745	990	1490	2230	3720	6200
300	230	665	890	1335	2000	3335	5560
400	200	615	820	1230	1845	3070	5120
500	170	580	775	1160	1740	2905	4840
600	140	555	740	1115	1670	2785	4640
650	125	545	730	1095	1640	2735	4560
700	110	540	725	1085	1625	2710	4520
750	95	530	710	1065	1595	2660	4430

NOTE:
(1) This steel may become brittle after service at moderately elevated temperatures. Not to be used over 600°F.

Copyright ASME International
Provided by IHS under license with ASME
No reproduction or networking permitted without license from IHS Not for Resale

Table F2-2.9 Pressure–Temperature Ratings for Group 2.9 Materials

Nominal Designation	Forgings	Castings	Plates
23Cr–12Ni			A 240 Gr. 309S (1), (2), (3)
25Cr–20Ni			A 240 Gr. 310S (1), (2), (3)

	Working Pressures by Classes, psig						
Class Temp., °F	150	300	400	600	900	1500	2500
–20 to 100	275	720	960	1440	2160	3600	6000
200	240	630	840	1260	1895	3155	5260
300	225	580	775	1160	1740	2905	4840
400	200	540	725	1085	1625	2710	4520
500	170	515	685	1025	1540	2570	4280
600	140	495	660	990	1485	2470	4120
650	125	485	645	970	1455	2425	4040
700	110	480	635	955	1435	2390	3980
750	95	470	625	940	1410	2350	3920
800	80	465	620	930	1395	2330	3880
850	65	460	610	915	1375	2290	3820
900	50	450	600	900	1350	2245	3745
950	35	385	515	775	1160	1930	3220
1000	20	340	455	680	1020	1695	2830
1050	...	245	325	485	730	1215	2030
1100	...	170	230	345	515	855	1430
1150	...	125	165	245	370	615	1030
1200	...	85	115	170	255	430	715
1250	...	50	70	105	155	255	430
1300	...	25	35	55	80	135	230
1350	...	15	25	35	50	85	145
1400	...	15	20	25	40	70	115
1450	...	10	15	20	30	50	85
1500	...	5	10	15	20	35	55

NOTES:

(1) At temperatures over 1000°F, use only when the carbon content is 0.04% or higher.

(2) At temperatures above 1000°F, use only if the material is solution heat treated to the minimum temperature specified in the specification, but not lower than 1900°F, and quenching in water or rapidly cooling by other means.

(3) This material should be used for service temperatures 1050°F and above only when assurance is provided that grain size is not finer than ASTM 6.

Copyright ASME International
Provided by IHS under license with ASME
No reproduction or networking permitted without license from IHS Not for Resale

Table F2-2.10 Pressure–Temperature Ratings for Group 2.10 Materials

Nominal Designation	Forgings	Castings	Plates
25Cr–12Ni		A 351 Gr. CH8 (1) A 351 Gr. CH20 (1)	

	Working Pressures by Classes, psig						
Class Temp., °F	150	300	400	600	900	1500	2500
–20 to 100	260	670	895	1345	2015	3360	5600
200	210	550	735	1100	1650	2750	4580
300	195	505	675	1015	1520	2530	4220
400	185	485	645	970	1455	2425	4040
500	170	470	625	940	1410	2350	3920
600	140	455	610	910	1370	2280	3800
650	125	445	595	895	1340	2230	3720
700	110	435	580	870	1305	2170	3620
750	95	420	565	845	1265	2110	3520
800	80	410	545	820	1230	2050	3420
850	65	400	530	795	1195	1990	3320
900	50	385	510	770	1150	1920	3200
950	35	370	495	740	1110	1850	3080
1000	20	340	450	675	1015	1690	2820
1050	...	290	390	585	875	1455	2430
1100	...	225	295	445	670	1115	1855
1150	...	170	230	345	515	855	1430
1200	...	130	175	260	390	650	1085
1250	...	100	135	200	300	495	830
1300	...	80	105	160	235	395	655
1350	...	60	80	125	185	310	515
1400	...	45	60	90	135	225	370
1450	...	30	40	60	95	155	255
1500	...	25	35	55	80	135	230

NOTE:
(1) At temperatures over 1000°F, use only when the carbon content is 0.04% or higher.

Copyright ASME International
Provided by IHS under license with ASME
No reproduction or networking permitted without license from IHS
Not for Resale

Table F2-2.11 Pressure–Temperature Ratings for Group 2.11 Materials

Nominal Designation	Forgings		Castings			Plates
18Cr–10Ni–Cb			A 351 Gr. CF8C (1)			
	Working Pressures by Classes, psig					
Class Temp., °F	150	300	400	600	900	1500	2500
–20 to 100	275	720	960	1440	2160	3600	6000
200	255	660	885	1325	1985	3310	5520
300	230	615	820	1235	1850	3085	5140
400	200	575	770	1150	1730	2880	4800
500	170	540	725	1085	1625	2710	4520
600	140	515	690	1030	1550	2580	4300
650	125	505	675	1015	1520	2530	4220
700	110	495	660	995	1490	2485	4140
750	95	490	655	985	1475	2460	4100
800	80	485	650	975	1460	2435	4060
850	65	485	645	970	1455	2425	4040
900	50	450	600	900	1350	2245	3745
950	35	385	515	775	1160	1930	3220
1000	20	365	485	725	1090	1820	3030
1050	...	360	480	720	1080	1800	3000
1100	...	310	415	625	935	1560	2600
1150	...	210	280	420	625	1045	1745
1200	...	150	200	300	455	755	1255
1250	...	115	150	225	340	565	945
1300	...	75	100	150	225	375	630
1350	...	50	70	105	155	255	430
1400	...	40	55	80	125	205	345
1450	...	30	40	60	95	155	255
1500	...	25	35	55	80	135	230

NOTE:
(1) At temperatures over 1000°F, use only when the carbon content is 0.04% or higher.

Copyright ASME International
Provided by IHS under license with ASME
No reproduction or networking permitted without license from IHS
Not for Resale

Table F2-2.12 Pressure–Temperature Ratings for Group 2.12 Materials

Nominal Designation	Forgings	Castings	Plates
25Cr–20Ni	A 351 Gr. CK20 (1)		

	Working Pressures by Classes, psig						
Class Temp., °F	150	300	400	600	900	1500	2500
–20 to 100	260	670	895	1345	2015	3360	5600
200	210	550	735	1100	1650	2750	4580
300	195	505	675	1015	1520	2530	4220
400	185	485	645	970	1455	2425	4040
500	170	470	625	940	1410	2350	3920
600	140	455	610	910	1370	2280	3800
650	125	445	595	895	1340	2230	3720
700	110	435	580	870	1305	2170	3620
750	95	420	565	845	1265	2110	3520
800	80	410	545	820	1230	2050	3420
850	65	400	530	795	1195	1990	3320
900	50	385	510	770	1150	1920	3200
950	35	370	495	740	1110	1850	3080
1000	20	340	450	675	1015	1690	2820
1050	...	325	435	650	975	1630	2715
1100	...	290	390	585	875	1455	2430
1150	...	250	335	500	750	1250	2085
1200	...	205	275	410	615	1030	1715
1250	...	165	220	330	495	825	1370
1300	...	120	160	240	360	600	1000
1350	...	80	110	165	245	410	685
1400	...	55	75	110	165	275	455
1450	...	40	50	75	115	190	315
1500	...	25	35	55	80	135	230

NOTE:
(1) At temperatures over 1000°F, use only when the carbon content is 0.04% or higher.

Copyright ASME International
Provided by IHS under license with ASME
No reproduction or networking permitted without license from IHS
Not for Resale

Table F2-3.1 Pressure–Temperature Ratings for Group 3.1 Materials

Nominal Designation	Forgings	Castings	Plates
35Ni–35Fe–10Cr–Cb	B 462 Gr. N08020 (1)		B 463 Gr. N08020 (1)

	Working Pressures by Classes, psig						
Class Temp., °F	150	300	400	600	900	1500	2500
–20 to 100	290	750	1000	1500	2250	3750	6250
200	260	740	990	1485	2225	3710	6180
300	230	710	945	1420	2130	3550	5920
400	200	680	910	1365	2045	3410	5680
500	170	655	875	1310	1965	3275	5460
600	140	605	805	1210	1815	3025	5040
650	125	590	785	1175	1765	2940	4905
700	110	570	755	1135	1705	2840	4730
750	95	530	710	1065	1595	2660	4430
800	80	510	675	1015	1525	2540	4230

NOTE:
(1) Use annealed material only.

Table F2-3.2 Pressure–Temperature Ratings for Group 3.2 Materials

Nominal Designation	Forgings	Castings	Plates
99.0Ni	B 160 Gr. N02200 (1), (2)		B 162 Gr. N02200 (1)

	Working Pressures by Classes, psig						
Class Temp., °F	150	300	400	600	900	1500	2500
–20 to 100	185	480	640	960	1440	2400	4000
200	185	480	640	960	1440	2400	4000
300	185	480	640	960	1440	2400	4000
400	185	480	640	960	1440	2400	4000
500	170	455	605	905	1360	2270	3780
600	140	415	550	825	1240	2065	3440

NOTES:
(1) Use annealed material only.
(2) The chemical composition, mechanical properties, heat treating requirements, and grain size requirements shall conform to the applicable ASTM specification. The manufacturing procedures, tolerances, tests, certification, and markings shall be in accordance with ASTM B 564.

Copyright ASME International
Provided by IHS under license with ASME
No reproduction or networking permitted without license from IHS
Not for Resale

Table F2-3.3 Pressure–Temperature Ratings for Group 3.3 Materials

Nominal Designation	Forgings	Castings	Plates
99.0Ni–Low C	B160 Gr. N02201 (1), (2)		B 162 Gr. N02201 (1)

	Working Pressures by Classes, psig						
Class Temp., °F	150	300	400	600	900	1500	2500
–20 to 100	90	240	320	480	720	1200	2000
200	90	230	305	460	690	1150	1920
300	85	225	300	450	675	1130	1880
400	85	225	300	450	675	1130	1880
500	85	225	300	450	675	1130	1880
600	85	225	300	450	675	1130	1880
650	85	225	300	445	670	1115	1860
700	85	225	300	445	670	1115	1860
750	85	220	295	440	660	1105	1840
800	80	215	290	430	650	1080	1800
850	65	210	280	420	635	1055	1760
900	50	205	275	415	620	1030	1720
950	35	195	260	395	590	985	1640
1000	20	190	255	380	570	950	1580
1050	. . .	80	110	165	245	410	685
1100	. . .	70	90	135	205	345	570
1150	. . .	50	70	105	155	255	430
1200	. . .	40	55	80	125	205	345

NOTES:

(1) Use annealed material only.

(2) The chemical composition, mechanical properties, heat treating requirements, and grain size requirements shall conform to the applicable ASTM specification. The manufacturing procedures, tolerances, tests, certification, and markings shall be in accordance with ASTM B 564.

Copyright ASME International
Provided by IHS under license with ASME
No reproduction or networking permitted without license from IHS
Not for Resale

Table F2-3.4 Pressure–Temperature Ratings for Group 3.4 Materials

Nominal Designation	Forgings	Castings	Plates
67Ni–30Cu	B 564 Gr. N04400 (1)		B 127 Gr. N04400 (1)
67Ni–30Cu–S	B 164 Gr. N04405 (1), (2)		

	Working Pressures by Classes, psig						
Class Temp., °F	150	300	400	600	900	1500	2500
–20 to 100	230	600	800	1200	1800	3000	5000
200	200	525	700	1050	1575	2630	4380
300	190	490	655	980	1470	2450	4080
400	180	475	630	945	1420	2365	3940
500	170	475	630	945	1420	2365	3940
600	140	475	630	945	1420	2365	3940
650	125	475	630	945	1420	2365	3940
700	110	470	625	940	1410	2350	3920
750	95	465	620	930	1395	2330	3880
800	80	460	610	915	1375	2290	3820
850	65	375	505	755	1130	1885	3145
900	50	275	365	550	825	1370	2285

NOTES:
(1) Use annealed material only.
(2) The chemical composition, mechanical properties, heat treating requirements, and grain size requirements shall conform to the applicable ASTM specification. The manufacturing procedures, tolerances, tests, certification, and markings shall be in accordance with ASTM B 564.

Copyright ASME International
Provided by IHS under license with ASME
No reproduction or networking permitted without license from IHS
Not for Resale

Table F2-3.5 Pressure–Temperature Ratings for Group 3.5 Materials

Nominal Designation	Forgings	Castings	Plates
72Ni–15Cr–8Fe	B 564 Gr. N06600 (1)		B 168 Gr. N06600 (1)

	Working Pressures by Classes, psig						
Class Temp., °F	150	300	400	600	900	1500	2500
–20 to 100	290	750	1000	1500	2250	3750	6250
200	260	750	1000	1500	2250	3750	6250
300	230	730	970	1455	2185	3640	6070
400	200	705	940	1410	2115	3530	5880
500	170	665	885	1330	1995	3325	5540
600	140	605	805	1210	1815	3025	5040
650	125	590	785	1175	1765	2940	4905
700	110	570	755	1135	1705	2840	4730
750	95	530	710	1065	1595	2660	4430
800	80	510	675	1015	1525	2540	4230
850	65	485	650	975	1460	2435	4060
900	50	450	600	900	1350	2245	3745
950	35	365	485	725	1090	1815	3030
1000	20	240	320	480	720	1200	2000
1050	. . .	155	205	310	465	770	1285
1100	. . .	105	135	205	310	515	855
1150	. . .	75	100	150	225	375	630
1200	. . .	70	90	135	205	345	570

NOTE:
(1) Use annealed material only.

Copyright ASME International
Provided by IHS under license with ASME
No reproduction or networking permitted without license from IHS Not for Resale

Table F2-3.6 Pressure–Temperature Ratings for Group 3.6 Materials

Nominal Designation	Forgings	Castings	Plates
33Ni–42Fe–21Cr	B 564 Gr. N08800 (1)		B 409 Gr. N08800 (1)

	Working Pressures by Classes, psig						
Class Temp., °F	150	300	400	600	900	1500	2500
–20 to 100	275	720	960	1440	2160	3600	6000
200	255	665	885	1330	1995	3325	5540
300	230	640	850	1275	1915	3190	5320
400	200	620	825	1240	1860	3095	5160
500	170	600	805	1205	1805	3010	5020
600	140	590	785	1175	1765	2940	4900
650	125	580	770	1155	1735	2890	4820
700	110	570	755	1135	1705	2840	4730
750	95	530	710	1065	1595	2660	4430
800	80	510	675	1015	1525	2540	4230
850	65	485	650	975	1460	2435	4060
900	50	450	600	900	1350	2245	3745
950	35	385	515	775	1160	1930	3220
1000	20	365	485	725	1090	1820	3030
1050	...	360	480	720	1080	1800	3000
1100	...	325	430	645	965	1610	2685
1150	...	275	365	550	825	1370	2285
1200	...	205	275	410	620	1030	1715
1250	...	145	190	290	430	720	1200
1300	...	70	90	135	205	345	570
1350	...	55	75	110	165	275	455
1400	...	40	50	75	115	190	315
1450	...	35	45	70	105	170	285
1500	...	25	35	55	80	135	230

NOTE:
(1) Use annealed material only.

Copyright ASME International
Provided by IHS under license with ASME
No reproduction or networking permitted without license from IHS
Not for Resale

Table F2-3.7 Pressure–Temperature Ratings for Group 3.7 Materials

Nominal Designation	Forgings	Castings	Plates
65Ni–28Mo–2Fe	B 462 Gr. N10665 (1)		B 333 Gr. N10665 (1)
64Ni–29.5Mo–2Cr–2Fe–Mn–W	B 462 Gr. N10675 (1)		B 333 Gr. N10675 (1)

	Working Pressures by Classes, psig						
Class Temp., °F	150	300	400	600	900	1500	2500
–20 to 100	290	750	1000	1500	2250	3750	6250
200	260	750	1000	1500	2250	3750	6250
300	230	730	970	1455	2185	3640	6070
400	200	705	940	1410	2115	3530	5880
500	170	665	885	1330	1995	3325	5540
600	140	605	805	1210	1815	3025	5040
650	125	590	785	1175	1765	2940	4905
700	110	570	755	1135	1705	2840	4730
750	95	530	710	1065	1595	2660	4430
800	80	510	675	1015	1525	2540	4230

NOTE:
(1) Use solution annealed material only.

Copyright ASME International
Provided by IHS under license with ASME
No reproduction or networking permitted without license from IHS Not for Resale

Table F2-3.8 Pressure–Temperature Ratings for Group 3.8 Materials

Nominal Designation	Forgings	Castings	Plates
54Ni–16Mo–15Cr	B 462 Gr. N10276 (1), (2)		B 575 Gr. N10276 (1), (2)
60Ni–22Cr–9Mo–3.5Cb	B 564 Gr. N06625 (3), (4)		B 443 Gr. N06625 (3), (4)
62Ni–28Mo–5Fe	B 335 Gr. N10001 (1), (5), (6)		B 333 Gr. N10001 (1), (6)
70Ni–16Mo–7Cr–5Fe	B 573 Gr. N10003 (5), (3)		B 434 Gr. N10003 (3)
61Ni–16Mo–16Cr	B 574 Gr. N06455 (1), (5), (6)		B 575 Gr. N06455 (1), (6)
42Ni–21.5Cr–3Mo–2.3Cu	B 564 Gr. N08825 (3), (7)		B 424 Gr. N08825 (3), (7)
55Ni–21Cr–13.5Mo	B 462 Gr. N06022 (1), (2), (8)		B 575 Gr. N06022 (1), (2), (8)
55Ni–23Cr–16Mo–1.6Cu	B 462 Gr. N06200 (1), (6)		B 575 Gr. N06200 (1), (6)

	Working Pressures by Classes, psig						
Class Temp., °F	150	300	400	600	900	1500	2500
–20 to 100	290	750	1000	1500	2250	3750	6250
200	260	750	1000	1500	2250	3750	6250
300	230	730	970	1455	2185	3640	6070
400	200	700	930	1395	2095	3490	5820
500	170	665	885	1330	1995	3325	5540
600	140	605	805	1210	1815	3025	5040
650	125	590	785	1175	1765	2940	4905
700	110	570	755	1135	1705	2840	4730
750	95	530	710	1065	1595	2660	4430
800	80	510	675	1015	1525	2540	4230
850	65	485	650	975	1460	2435	4060
900	50	450	600	900	1350	2245	3745
950	35	385	515	775	1160	1930	3220
1000	20	365	485	725	1090	1820	3030
1050	...	360	480	720	1080	1800	3000
1100	...	325	430	645	965	1610	2685
1150	...	275	365	550	825	1370	2285
1200	...	205	275	410	615	1030	1715
1250	...	165	220	330	495	825	1370
1300	...	120	160	240	360	600	1000

NOTES:

(1) Use solution annealed material only.

(2) Not to be used over 1250°F.

(3) Use annealed material only.

(4) Not to be used over 1200°F. Alloy N06625 in the annealed condition is subject to severe loss of impact strength at room temperatures after exposure in the range of 1000°F to 1400°F.

(5) The chemical composition, mechanical properties, heat treating requirements, and grain size requirements shall conform to the applicable ASTM specification. The manufacturing procedures, tolerances, tests, certification, and markings shall be in accordance with ASTM B 564.

(6) Not to be used over 800°F.

(7) Not to be used over 1000°F.

(8) Alloy N06022 in the solution annealed condition is subject to severe loss of impact strength at room temperature after exposure to temperatures in the range of 1000°F to 1250°F.

Copyright ASME International
Provided by IHS under license with ASME
No reproduction or networking permitted without license from IHS Not for Resale

Table F2-3.9 Pressure–Temperature Ratings for Group 3.9 Materials

Nominal Designation	Forgings	Castings	Plates
47Ni–22Cr–9Mo–18Fe	B 572 Gr. N06002 (1), (2)		B 435 Gr. N06002 (1)

	Working Pressures by Classes, psig						
Class Temp., °F	150	300	400	600	900	1500	2500
–20 to 100	290	750	1000	1500	2250	3750	6250
200	260	750	1000	1500	2250	3750	6250
300	230	690	920	1380	2075	3455	5760
400	200	640	850	1275	1915	3190	5320
500	170	595	795	1190	1785	2975	4960
600	140	565	750	1130	1690	2820	4700
650	125	550	735	1105	1655	2760	4600
700	110	540	725	1085	1625	2710	4520
750	95	530	710	1065	1595	2660	4430
800	80	510	675	1015	1525	2540	4230
850	65	485	650	975	1460	2435	4060
900	50	450	600	900	1350	2245	3745
950	35	385	515	775	1160	1930	3220
1000	20	365	485	725	1090	1820	3030
1050	. . .	360	480	720	1080	1800	3000
1100	. . .	325	430	645	965	1610	2685
1150	. . .	275	365	550	825	1370	2285
1200	. . .	205	275	410	620	1030	1715
1250	. . .	180	245	365	545	910	1515
1300	. . .	140	185	275	410	685	1145
1350	. . .	105	140	205	310	515	860
1400	. . .	75	100	150	225	380	630
1450	. . .	60	80	115	175	290	485
1500	. . .	40	55	85	125	205	345

NOTES:

(1) Use solution annealed material only.

(2) The chemical composition, mechanical properties, heat treating requirements, and grain size requirements shall conform to the applicable ASTM specification. The manufacturing procedures, tolerances, tests, certification, and markings shall be in accordance with ASTM B 564.

Copyright ASME International
Provided by IHS under license with ASME
No reproduction or networking permitted without license from IHS
Not for Resale

Table F2-3.10 Pressure–Temperature Ratings for Group 3.10 Materials

Nominal Designation	Forgings	Castings	Plates
25Ni–46Fe–21Cr–5Mo	B 672 Gr. N08700 (1), (2)		B 599 Gr. N08700 (1)

	Working Pressures by Classes, psig						
Class Temp., °F	150	300	400	600	900	1500	2500
–20 to 100	290	750	1000	1500	2250	3750	6250
200	260	750	1000	1500	2250	3750	6250
300	230	685	910	1370	2050	3420	5700
400	200	640	850	1275	1915	3190	5320
500	170	615	820	1235	1850	3085	5140
600	140	595	790	1185	1780	2965	4940
650	125	570	760	1140	1715	2855	4760

NOTES:
(1) Use solution annealed material only.
(2) The chemical composition, mechanical properties, heat treating requirements, and grain size requirements shall conform to the applicable ASTM specification. The manufacturing procedures, tolerances, tests, certification, and markings shall be in accordance with ASTM B 564.

Table F2-3.11 Pressure–Temperature Ratings for Group 3.11 Materials

Nominal Designation	Forgings	Castings	Plates
44Fe–25Ni–21Cr–Mo	B 649 Gr. N08904 (1), (2)		B 625 Gr. N08904 (1)

	Working Pressures by Classes, psig						
Class Temp., °F	150	300	400	600	900	1500	2500
–20 to 100	285	745	990	1490	2230	3720	6200
200	230	600	805	1205	1805	3010	5020
300	210	545	725	1090	1635	2725	4540
400	190	500	665	1000	1500	2495	4160
500	170	455	610	910	1370	2280	3800
600	140	425	570	855	1280	2135	3560
650	125	420	555	835	1255	2090	3480
700	110	410	545	820	1230	2050	3420

NOTES:
(1) Use annealed material only.
(2) The chemical composition, mechanical properties, heat treating requirements, and grain size requirements shall conform to the applicable ASTM specification. The manufacturing procedures, tolerances, tests, certification, and markings shall be in accordance with ASTM B 564.

Copyright ASME International
Provided by IHS under license with ASME
No reproduction or networking permitted without license from IHS
Not for Resale

Table F2-3.12 Pressure–Temperature Ratings for Group 3.12 Materials

Nominal Designation	Forgings	Castings	Plates
26Ni–43Fe–22Cr–5Mo	B 621 Gr. N08320 (1), (2)		B 620 Gr. N08320 (1)
47Ni–22Cr–20Fe–7Mo	B 581 Gr. N06985 (1), (2)		B 582 Gr. N06985 (1)
46Fe–24Ni–21Cr–6Mo–Cu–N	B 462 Gr. N08367 (1)	A 351 Gr. CN3MM (1)	B 688 Gr. N08367 (1)

	Working Pressures by Classes, psig						
Class Temp., °F	150	300	400	600	900	1500	2500
–20 to 100	260	670	895	1345	2015	3360	5600
200	240	620	830	1245	1865	3110	5180
300	225	585	780	1165	1750	2915	4860
400	200	540	715	1075	1615	2690	4480
500	170	500	665	1000	1500	2495	4160
600	140	475	630	945	1420	2365	3940
650	125	460	615	920	1380	2305	3840
700	110	450	600	900	1355	2255	3760
750	95	440	590	885	1325	2210	3680
800	80	430	575	865	1295	2160	3600

NOTES:
(1) Use solution annealed material only.
(2) The chemical composition, mechanical properties, heat treating requirements, and grain size requirements shall conform to the applicable ASTM specification. The manufacturing procedures, tolerances, tests, certification, and markings shall be in accordance with ASTM B 564.

Table F2-3.13 Pressure–Temperature Ratings for Group 3.13 Materials

Nominal Designation	Forgings	Castings	Plates
49Ni–25Cr–18Fe–6Mo	B 581 Gr. N06975 (1), (2)		B 582 Gr. N06975 (1)
Ni–Fe–Cr–Mo–Cu–Low C	B 564 Gr. N08031 (3)		B 625 Gr. N08031 (3)

	Working Pressures by Classes, psig						
Class Temp., °F	150	300	400	600	900	1500	2500
–20 to 100	290	750	1000	1500	2250	3750	6250
200	260	705	940	1405	2110	3515	5860
300	230	665	885	1330	1995	3325	5540
400	200	630	840	1260	1885	3145	5240
500	170	595	795	1190	1785	2975	4960
600	140	560	750	1125	1685	2810	4680
650	125	550	735	1100	1650	2750	4580
700	110	540	720	1080	1620	2700	4500
750	95	530	710	1065	1595	2660	4430
800	80	510	675	1015	1525	2540	4230

NOTES:
(1) Use solution annealed material only.
(2) The chemical composition, mechanical properties, heat treating requirements, and grain size requirements shall conform to the applicable ASTM specification. The manufacturing procedures, tolerances, tests, certification, and markings shall be in accordance with ASTM B 564.
(3) Use annealed material only.

Copyright ASME International
Provided by IHS under license with ASME
No reproduction or networking permitted without license from IHS Not for Resale

Table F2-3.14 Pressure–Temperature Ratings for Group 3.14 Materials

Nominal Designation	Forgings	Castings	Plates
47Ni–22Cr–19Fe–6Mo	B 581 Gr. N06007 (1), (2)		B 582 Gr. N06007 (1)
40Ni–29Cr–15Fe–5Mo	B 462 Gr. N06030 (1), (3)		B 582 Gr. N06030 (1), (3)

	Working Pressures by Classes, psig						
Class Temp., °F	150	300	400	600	900	1500	2500
–20 to 100	275	720	960	1440	2160	3600	6000
200	250	650	865	1295	1945	3240	5400
300	230	600	800	1200	1800	3000	5000
400	200	565	750	1130	1690	2820	4700
500	170	540	715	1075	1615	2690	4480
600	140	520	690	1035	1555	2590	4320
650	125	510	680	1020	1535	2555	4260
700	110	505	675	1015	1520	2530	4220
750	95	500	670	1005	1505	2510	4180
800	80	500	665	1000	1500	2495	4160
850	65	485	650	975	1460	2435	4060
900	50	450	600	900	1350	2245	3745
950	35	385	515	775	1160	1930	3220
1000	20	365	485	725	1090	1820	3030

NOTES:

(1) Use solution annealed material only.

(2) The chemical composition, mechanical properties, heat treating requirements, and grain size requirements shall conform to the applicable ASTM specification. The manufacturing procedures, tolerances, tests, certification, and markings shall be in accordance with ASTM B 564.

(3) Not to be used over 800°F.

Copyright ASME International
Provided by IHS under license with ASME
No reproduction or networking permitted without license from IHS
Not for Resale

Table F2-3.15 Pressure–Temperature Ratings for Group 3.15 Materials

Nominal Designation	Forgings	Castings	Plates
33Ni–42Fe–21Cr	B 564 Gr. N08810 (1)		B 409 Gr. N08810 (1)

	Working Pressures by Classes, psig						
Class Temp., °F	150	300	400	600	900	1500	2500
–20 to 100	230	600	800	1200	1800	3000	5000
200	210	550	735	1105	1655	2760	4600
300	200	520	695	1040	1560	2605	4340
400	190	490	655	980	1470	2450	4080
500	170	465	620	925	1390	2315	3860
600	140	440	585	880	1320	2195	3660
650	125	430	575	860	1290	2150	3580
700	110	420	555	835	1255	2090	3480
750	95	410	545	820	1230	2050	3420
800	80	400	535	800	1200	2005	3340
850	65	395	525	785	1180	1970	3280
900	50	385	515	775	1160	1930	3220
950	35	380	505	760	1140	1895	3160
1000	20	365	485	725	1090	1820	3030
1050	...	350	465	700	1050	1750	2915
1100	...	325	430	645	965	1610	2685
1150	...	275	365	550	825	1370	2285
1200	...	205	275	410	620	1030	1715
1250	...	180	245	365	545	910	1515
1300	...	140	185	275	410	685	1145
1350	...	105	140	205	310	515	860
1400	...	75	100	150	225	380	630
1450	...	60	80	115	175	290	485
1500	...	40	55	85	125	205	345

NOTE:
(1) Use solution annealed material only.

Copyright ASME International
Provided by IHS under license with ASME
No reproduction or networking permitted without license from IHS
Not for Resale

Table F2-3.16 Pressure–Temperature Ratings for Group 3.16 Materials

Nominal Designation	Forgings	Castings	Plates
35Ni–19Cr–1¼Si	B 511 Gr. N08330 (1), (2)		B 536 Gr. N08330 (1)

	Working Pressures by Classes, psig						
Class Temp., °F	150	300	400	600	900	1500	2500
–20 to 100	275	720	960	1440	2160	3600	6000
200	245	635	850	1270	1910	3180	5300
300	225	595	790	1185	1780	2965	4940
400	200	555	740	1115	1670	2785	4640
500	170	530	705	1055	1585	2640	4400
600	140	505	670	1010	1510	2520	4200
650	125	495	660	990	1485	2470	4120
700	110	480	645	965	1445	2410	4020
750	95	475	630	945	1420	2365	3940
800	80	465	620	925	1390	2315	3860
850	65	455	605	905	1360	2270	3780
900	50	445	590	890	1330	2220	3700
950	35	385	515	775	1160	1930	3220
1000	20	365	485	725	1090	1820	3030
1050	...	345	455	685	1030	1715	2855
1100	...	265	355	535	800	1335	2230
1150	...	205	275	410	615	1030	1715
1200	...	160	215	320	485	805	1345
1250	...	130	175	260	390	650	1085
1300	...	105	140	215	320	530	885
1350	...	80	110	165	245	410	685
1400	...	60	80	125	185	310	515
1450	...	50	70	105	155	255	430
1500	...	40	50	75	115	190	315

NOTES:

(1) Use solution annealed material only.

(2) The chemical composition, mechanical properties, heat treating requirements, and grain size requirements shall conform to the applicable ASTM specification. The manufacturing procedures, tolerances, tests, certification, and markings shall be in accordance with ASTM B 564.

Copyright ASME International
Provided by IHS under license with ASME
No reproduction or networking permitted without license from IHS
Not for Resale

Table F2-3.17 Pressure–Temperature Ratings for Group 3.17 Materials

Nominal Designation	Forgings	Castings	Plates
29Ni–20.5Cr–3.5Cu–2.5Mo		A 351 Gr. CN7M (1)	

	Working Pressures by Classes, psig						
Class Temp., °F	150	300	400	600	900	1500	2500
–20 to 100	230	600	800	1200	1800	3000	5000
200	200	520	690	1035	1555	2590	4320
300	180	465	620	930	1395	2330	3880
400	160	420	565	845	1265	2110	3520
500	150	390	520	780	1165	1945	3240
600	140	360	480	720	1080	1800	3000

NOTE:
(1) Use solution annealed material only.

Table F3 Permissible Imperfections in Flange Facing Finish for Raised Face and Large Male and Female Flanges

NPS	Maximum Radial Projection of Imperfections Which Are No Deeper Than the Bottom of the Serrations, in.	Maximum Depth and Radial Projection of Imperfections Which Are Deeper Than the Bottom of the Serrations, in.
1/2	0.12	0.06
3/4	0.12	0.06
1	0.12	0.06
1 1/4	0.12	0.06
1 1/2	0.12	0.06
2	0.12	0.06
2 1/2	0.12	0.06
3	0.18	0.06
3 1/2	0.25	0.12
4	0.25	0.12
5	0.25	0.12
6	0.25	0.12
8	0.31	0.18
10	0.31	0.18
12	0.31	0.18
14	0.31	0.18
16	0.38	0.18
18	0.50	0.25
20	0.50	0.25
24	0.50	0.25

--`,,```,,,,````-`-`,,`,,`,`,,`---

Copyright ASME International
Provided by IHS under license with ASME
No reproduction or networking permitted without license from IHS
Not for Resale

Copyright ASME International
Provided by IHS under license with ASME
No reproduction or networking permitted without license from IHS

Table F4 Dimensions of Facings (Other Than Ring Joints, All Pressure Rating Classes)

1	2	3	4	5	6	7	8	9	10	11	12	13	14	15	1
	Outside Diameter					Outside Diameter				Height					
Nominal Pipe Size	Raised Face Large Male and Large Tongue, *R*	Small Male, *S* [Note (1)]	Small Tongue, *T*	Inside Diameter of Large and Small Tongue, *U*	Inside Diameter of Small Male [Note (1)]	Large Female and Large Groove, *W*	Small Female, *X* [Note (1)]	Small Groove, *Y*	Inside Diameter of Large and Small Groove, *Z*	Raised Face [Notes (2), (3)]	Large and Small Male and Tongue [Notes (2), (4)]	Depth of Groove or Female [Notes (2), (5)]	Minimum Outside Diameter of Raised Portion [Notes (6), (7)] Small Female and Groove, *K*	Minimum Outside Diameter of Raised Portion [Notes (6), (7)] Large Female and Groove, *L*	Nominal Pipe Size
½	1.38	0.72	1.38	1.00	...	1.44	0.78	1.44	0.94	...	...	...	1.75	1.81	½
¾	1.69	0.94	1.69	1.31	...	1.75	1.00	1.75	1.25	...	...	...	2.06	2.12	¾
1	2.00	1.19	1.88	1.50	...	2.06	1.25	1.94	1.44	...	...	...	2.25	2.44	1
1¼	2.50	1.50	2.25	1.88	...	2.56	1.56	2.31	1.81	...	...	...	2.62	2.94	1¼
1½	2.88	1.75	2.50	2.12	...	2.94	1.81	2.56	2.06	...	...	...	2.88	3.31	1½
2	3.62	2.25	3.25	2.88	...	3.69	2.31	3.31	2.81	...	...	...	3.62	4.06	2
2½	4.12	2.69	3.75	3.38	...	4.19	2.75	3.81	3.31	...	...	...	4.12	4.56	2½
3	5.00	3.31	4.62	4.25	...	5.06	3.38	4.69	4.19	...	...	...	5.00	5.44	3
3½	5.50	3.81	5.12	4.75	...	5.56	3.88	5.19	4.69	...	...	...	5.50	5.94	3½
4	6.19	4.31	5.69	5.19	...	6.25	4.38	5.75	5.12	...	...	...	6.19	6.62	4
5	7.31	5.38	6.81	6.31	...	7.38	5.44	6.88	6.25	...	...	...	7.31	7.75	5
6	8.50	6.38	8.00	7.50	...	8.56	6.44	8.06	7.44	...	...	...	8.50	8.94	6
8	10.62	8.38	10.00	9.38	...	10.69	8.44	10.06	9.31	...	...	...	10.62	11.06	8
10	12.75	10.50	12.00	11.25	...	12.81	10.56	12.06	11.19	...	...	...	12.75	13.19	10
12	15.00	12.50	14.25	13.50	...	15.06	12.56	14.31	13.44	...	...	...	15.00	15.44	12
14	16.25	13.75	15.50	14.75	...	16.31	13.81	15.56	14.69	...	...	...	16.25	16.69	14
16	18.50	15.75	17.62	16.75	...	18.56	15.81	17.69	16.69	...	...	...	18.50	18.94	16
18	21.00	17.75	20.12	19.25	...	21.06	17.81	20.19	19.19	...	...	...	21.00	21.44	18
20	23.00	19.75	22.00	21.00	...	23.06	19.81	22.06	20.94	...	...	...	23.00	23.44	20
24	27.25	23.75	26.25	25.25	...	27.31	23.81	26.31	25.19	...	...	...	27.25	27.69	24

GENERAL NOTES:

(a) Dimensions are in inches.

(b) For facing requirements for flanges end flanged fittings, see paras. 6.3 and 6.4 and Fig. F7.

(c) For facing requirements for lapped Joints, see para. 6.4.3 and Fig. F7.

(d) For facing tolerances, see para. 7.3.

NOTES:

(1) For small male and female joints, care should be taken in the use of these dimensions to insure that the inside diameter of fitting or pipe is small enough to permit sufficient bearing surface to prevent the crushing of the gasket. This applies particularly where the joint is made on the end of the pipe. Inside diameter of fitting should match inside diameter of pipe as specified by purchaser. Threaded companion flanges for small male and female joints are furnished with plain face and are threaded with American National Standard Locknut Thread (NPSL).

(2) See para. 6.4.3 and Fig. F7 for thickness and outside diameters of laps.

(3) Height of raised face either 0.06 in. or 0.25 in. See para. 6.4.1.

(4) Height of large and small male and tongue is 0.25 in.

(5) Depth of groove or female is 0.19 in.

(6) Raised portion of full face may be furnished unless otherwise specified on order.

(7) Large male and female faces and large tongue and groove are not applicable to Class 150 because of potential dimensional conflicts.

Not for Resale

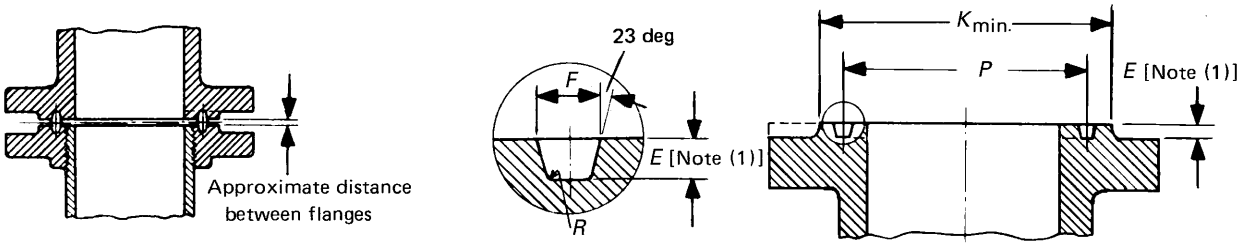

Table F5 Dimensions of Ring-Joint Facings (All Pressure Rating Classes)

1	2	3	4	5	6	7	8	9	10	11	12
Nominal Pipe Size								Groove Dimensions			
Class 150	Class 300	Class 400 [Note (2)]	Class 600	Class 900 [Note (3)]	Class 1500	Class 2500	Groove Number	Pitch Diameter, *P*	Depth, *E* [Note (1)]	Width, *F*	Radius at Bottom, *R*
...	1/2	...	1/2	...	...	...	R11	1.344	0.219	0.281	0.03
...	...	...	...	...	1/2	...	12	1.562	0.250	0.344	0.03
...	3/4	...	3/4	...	...	1/2	13	1.688	0.250	0.344	0.03
...	...	...	...	...	3/4	...	14	1.750	0.250	0.344	0.03
1	...	...	...	...	...	...	15	1.875	0.250	0.344	0.03
...	1	...	1	...	1	3/4	16	2.000	0.250	0.344	0.03
1 1/4	...	...	...	...	...	...	17	2.250	0.250	0.344	0.03
...	1 1/4	...	1 1/4	...	1 1/4	1	18	2.375	0.250	0.344	0.03
1 1/2	...	...	...	...	...	...	19	2.562	0.250	0.344	0.03
...	1 1/2	...	1 1/2	...	1 1/2	...	20	2.688	0.250	0.344	0.03
...	...	...	...	...	...	1 1/4	21	2.844	0.312	0.469	0.03
2	...	...	...	...	...	...	22	3.250	0.250	0.344	0.03
...	2	...	2	...	...	1 1/2	23	3.250	0.312	0.469	0.03
...	...	...	...	...	2	...	24	3.750	0.312	0.469	0.03
2 1/2	...	...	...	...	...	...	25	4.000	0.250	0.344	0.03
...	2 1/2	...	2 1/2	...	...	2	26	4.000	0.312	0.469	0.03
...	...	...	...	...	2 1/2	...	27	4.250	0.312	0.469	0.03
...	...	...	...	...	...	2 1/2	28	4.375	0.375	0.531	0.06
3	...	...	...	...	...	...	29	4.500	0.250	0.344	0.03
...	(4)	...	(4)	...	...	...	30	4.625	0.312	0.469	0.03
...	3 (4)	...	3 (4)	3	...	...	31	4.875	0.312	0.469	0.03
...	...	...	...	...	...	3	32	5.000	0.375	0.531	0.06
3 1/2	...	...	...	...	...	...	33	5.188	0.250	0.344	0.03
...	3 1/2	...	3 1/2	...	...	...	34	5.188	0.312	0.469	0.03
...	...	...	...	...	3	...	35	5.375	0.312	0.469	0.03
4	...	...	...	...	...	...	36	5.875	0.250	0.344	0.03
...	4	4	4	4	...	...	37	5.875	0.312	0.469	0.03
...	...	...	...	...	...	4	38	6.188	0.438	0.656	0.06
...	...	...	...	...	4	...	39	6.375	0.312	0.469	0.03
5	...	...	...	...	...	...	40	6.750	0.250	0.344	0.03
...	5	5	5	5	...	...	41	7.125	0.312	0.469	0.03
...	...	...	...	...	...	5	42	7.500	0.500	0.781	0.06
6	...	...	...	...	...	...	43	7.625	0.250	0.344	0.03
...	...	...	...	...	5	...	44	7.625	0.312	0.469	0.03
...	6	6	6	6	...	...	45	8.312	0.312	0.469	0.03
...	...	...	...	...	6	...	46	8.312	0.375	0.531	0.06
...	...	...	...	...	...	6	47	9.000	0.500	0.781	0.06
8	...	...	...	...	...	...	48	9.750	0.250	0.344	0.03
...	8	8	8	8	...	...	49	10.625	0.312	0.469	0.03
...	...	...	...	...	8	...	50	10.625	0.438	0.656	0.06

Copyright ASME International
Provided by IHS under license with ASME
No reproduction or networking permitted without license from IHS
Not for Resale

Table F5 Dimensions of Ring-Joint Facings (All Pressure Rating Classes) (Cont'd)

13	14	15	16	17	18	19	20	21	22	23	24
Diameter of Raised Portion, *K*					Approximate Distance Between Flanges						
Class 150	Class 300 400 600	Class 900	Class 1500	Class 2500	Class 150	Class 300	Class 400	Class 600	Class 900	Class 1500	Class 2500
...	2.00	...	...	...	...	0.12	...	0.12	...	...	...
...	...	...	2.38	...	...	...	...	...	...	0.16	...
...	2.50	...	...	2.56	...	0.16	...	0.16	...	...	0.16
...	...	...	2.62	...	...	...	...	...	...	0.16	...
2.50	...	...	...	...	0.16	...	...	...	...	...	...
...	2.75	...	2.81	2.88	...	0.16	...	0.16	...	0.16	0.16
2.88	...	...	...	...	0.16	...	...	...	...	...	...
...	3.12	...	3.19	3.25	...	0.16	...	0.16	...	0.16	0.16
3.25	...	...	...	...	0.16	...	...	...	...	...	...
...	3.56	...	3.62	...	...	0.16	...	0.16	...	0.16	...
...	...	...	...	4.00	...	...	...	...	...	...	0.12
4.00	...	...	...	...	0.16	...	...	...	...	...	...
...	4.25	...	...	4.50	...	0.22	...	0.19	...	...	0.12
...	...	...	4.88	...	...	...	...	...	...	0.12	...
4.75	...	...	...	...	0.16	...	...	...	...	...	...
...	5.00	...	...	5.25	...	0.22	...	0.19	...	...	0.12
...	...	...	5.38	...	...	...	...	...	...	0.12	...
...	...	...	...	5.88	...	...	...	...	...	...	0.12
5.25	...	...	...	...	0.16	...	...	...	...	...	...
...	...	...	...	...	...	...	...	...	...	...	...
...	5.75	6.12	...	...	...	0.22	...	0.19	0.16	...	...
...	...	...	...	6.62	...	...	...	...	...	...	0.12
6.06	...	...	...	...	0.16	...	...	...	...	...	...
...	6.25	...	...	...	...	0.22	...	0.19	...	...	...
...	...	...	6.62	...	...	...	...	...	...	0.12	...
6.75	...	...	...	...	0.16	...	...	...	...	...	...
...	6.88	7.12	...	...	...	0.22	0.22	0.19	0.16	...	...
...	...	...	...	8.00	...	...	...	...	...	...	0.16
...	...	...	7.62	...	...	...	...	...	...	0.12	...
7.62	...	...	...	...	0.16	...	...	...	...	...	...
...	8.25	8.50	...	...	...	0.22	0.22	0.19	0.16	...	...
...	...	...	...	9.50	...	...	...	...	...	...	0.16
8.62	...	...	...	...	0.16	...	...	...	...	...	...
...	...	...	9.00	...	...	...	...	...	...	0.12	...
...	9.50	9.50	...	...	...	0.22	0.22	0.19	0.16	...	...
...	...	...	9.75	...	...	...	...	...	...	0.12	...
...	...	...	...	11.00	...	...	...	...	...	...	0.16
10.75	...	...	...	...	0.16	...	...	...	...	...	
...	11.88	12.12	...	...	...	0.22	0.22	0.19	0.16	...	...
...	...	...	12.50	...	...	...	...	...	...	0.16	...

Copyright ASME International
Provided by IHS under license with ASME
No reproduction or networking permitted without license from IHS
Not for Resale

Table F5 Dimensions of Ring-Joint Facings (All Pressure Rating Classes) (Cont'd)

1	2	3	4	5	6	7	8	9	10	11	12
Nominal Pipe Size								Groove Dimensions			
Class 150	Class 300	Class 400 [Note (2)]	Class 600	Class 900 [Note (3)]	Class 1500	Class 2500	Groove Number	Pitch Diameter *P*	Depth, *E* [Note (1)]	Width *F*	Radius at Bottom *R*
...	...	...	...	...	...	8	51	11.000	0.562	0.906	0.06
10	...	...	...	...	...	...	52	12.000	0.250	0.344	0.03
...	10	10	10	10	...	...	53	12.750	0.312	0.469	0.03
...	...	...	...	...	10	...	54	12.750	0.438	0.656	0.06
...	...	...	...	...	...	10	55	13.500	0.688	1.188	0.09
12	...	...	...	...	...	...	56	15.000	0.250	0.344	0.03
...	12	12	12	12	...	...	57	15.000	0.312	0.469	0.03
...	...	...	...	...	12	...	58	15.000	0.562	0.906	0.06
14	...	...	...	...	...	...	59	15.625	0.250	0.344	0.03
...	...	...	...	...	...	12	60	16.000	0.688	1.312	0.09
...	14	14	14	...	...	...	61	16.500	0.312	0.469	0.03
...	...	...	...	14	...	...	62	16.500	0.438	0.656	0.06
...	...	...	...	...	14	...	63	16.500	0.625	1.062	0.09
16	...	...	...	...	...	...	64	17.875	0.250	0.344	0.03
...	16	16	16	...	...	...	65	18.500	0.312	0.469	0.03
...	...	...	...	16	...	...	66	18.500	0.438	0.656	0.06
...	...	...	...	...	16	...	67	18.500	0.688	1.188	0.09
18	...	...	...	...	...	...	68	20.375	0.250	0.344	0.03
...	18	18	18	...	...	...	69	21.000	0.312	0.469	0.03
...	...	...	...	18	...	...	70	21.000	0.500	0.781	0.06
...	...	...	...	...	18	...	71	21.000	0.688	1.188	0.09
20	...	...	...	...	...	...	72	22.000	0.250	0.344	0.03
...	20	20	20	...	...	...	73	23.000	0.375	0.531	0.06
...	...	...	...	20	...	...	74	23.000	0.500	0.781	0.06
...	...	...	...	...	20	...	75	23.000	0.688	1.312	0.09
24	...	...	...	...	...	...	76	26.500	0.250	0.344	0.03
...	24	24	24	...	...	...	77	27.250	0.438	0.656	0.06
...	...	...	...	24	...	...	78	27.250	0.625	1.062	0.09
...	...	...	...	...	24	...	79	27.250	0.812	1.438	0.09

Copyright ASME International
Provided by IHS under license with ASME
No reproduction or networking permitted without license from IHS
Not for Resale

Table F5 Dimensions of Ring-Joint Facings (All Pressure Rating Classes) (Cont'd)

13	14	15	16	17	18	19	20	21	22	23	24
Diameter of Raised Portion, *K*					Approximate Distance Between Flanges						
Class 150	Class 300 400 600	Class 900	Class 1500	Class 2500	Class 150	Class 300	Class 400	Class 600	Class 900	Class 1500	Class 2500
...	...	...	...	13.38	...	...	...	...	...	...	0.19
13.00	...	...	...	...	0.16	...	...	...	...	...	...
...	14.00	14.25	...	...	...	0.22	0.22	0.19	0.16	...	...
...	...	...	14.62	...	...	...	...	...	...	0.16	...
...	...	...	...	16.75	...	...	...	...	...	...	0.25
16.00	...	...	...	...	0.16	...	...	...	...	...	...
...	16.25	16.50	...	...	...	0.22	0.22	0.19	0.16	...	...
...	...	...	17.25	...	...	...	...	...	...	0.19	...
16.75	...	...	...	...	0.12	...	...	...	...	...	...
...	...	...	...	19.50	...	...	...	...	...	...	0.31
...	18.00	...	...	...	...	0.22	0.22	0.19	...	...	...
...	...	18.38	...	...	...	...	...	...	0.16	...	...
...	...	...	19.25	...	...	...	...	...	...	0.22	...
19.00	...	...	...	...	0.12	...	...	...	...	...	...
...	20.00	...	...	...	...	0.22	0.22	0.19	...	...	...
...	...	20.62	...	...	...	...	...	...	0.16	...	...
...	...	...	21.50	...	...	...	...	...	...	0.31	...
21.50	...	...	...	...	0.12	...	...	...	...	...	...
...	22.62	...	...	...	...	0.22	0.22	0.19	...	...	...
...	...	23.38	...	...	...	...	...	...	0.19	...	...
...	...	...	24.12	...	...	...	...	...	...	0.31	...
23.50	...	...	...	...	0.12	...	...	...	...	...	...
...	25.00	...	...	...	...	0.22	0.22	0.19	...	...	...
...	...	25.50	...	...	...	...	...	...	0.19	...	...
...	...	...	26.50	...	...	...	...	...	...	0.38	...
28.00	...	...	...	...	0.12	...	...	...	...	...	...
...	29.50	...	...	...	...	0.25	0.25	0.22	...	...	...
...	...	30.38	...	...	...	...	...	...	0.22	...	...
...	...	...	31.25	...	...	...	...	...	...	0.44	...

GENERAL NOTES:

(a) Dimensions are in inches.

(b) For facing requirements for flanges and flanged fittings, see para. 6.4.1 and Fig. F7.

(c) For facing requirements for lapped joints, see para. 6.4.3 and Fig. F7.

(d) See para 4.2.7 for marking requirements.

NOTES:

(1) Height of raised portion is equal to the depth of groove dimension *E*, but is not subjected to the tolerances for *E*. Former full-face contour may be used.

(2) Use Class 600 in sizes NPS $\frac{1}{2}$ to NPS $3\frac{1}{2}$ for Class 400.

(3) Use Class 1500 in sizes NPS $\frac{1}{2}$ to NPS $2\frac{1}{2}$ for Class 900.

(4) For ring joints with lapped flanges in Classes 300 and 600, ring and groove number R30 are used instead of R31.

TOLERANCES:

E (depth) +0.016, −0.0

F (width) ±0.008

P (pitch diameter) ±0.005

R (radius at bottom)

$R \leq 0.06$ +0.03, −0.0

$R > 0.06 \pm 0.03$

23 deg (angle) ± $\frac{1}{2}$ deg

Copyright ASME International
Provided by IHS under license with ASME
No reproduction or networking permitted without license from IHS Not for Resale

REDUCING THREADED AND SLIP-ON PIPE FLANGES

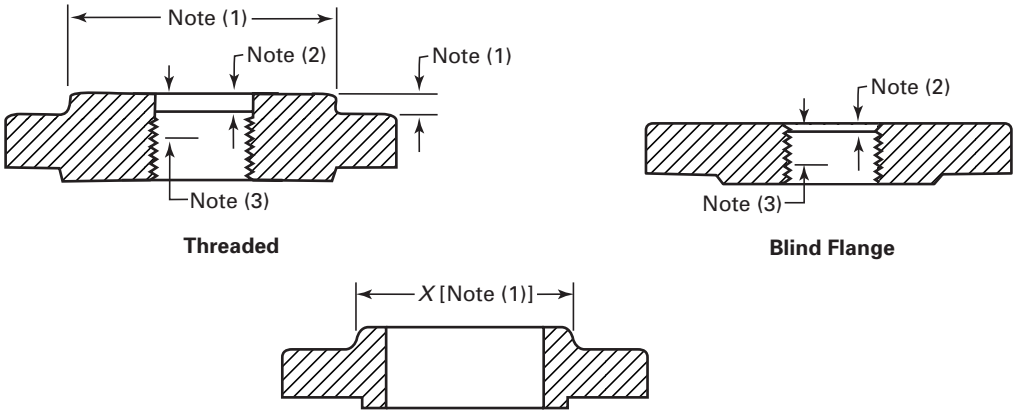

Table F6 Reducing Threaded and Slip-on Flanges for Classes 150 Through 2500

1	2	3	4	5	6
Nominal Pipe Size [Note (4)]	Smallest Size of Reducing Oulet Requiring Hub Flanges [Note (1)]	Nominal Pipe Size [Note (4)]	Smallest Size of Reducing Oulet Requiring Hub Flanges [Note (1)]	Nominal Pipe Size [Note (4)]	Smallest Size of Reducing Oulet Requiring Hub Flanges [Note (1)]
1	$\frac{1}{2}$	$3\frac{1}{2}$	$1\frac{1}{2}$	12	$3\frac{1}{2}$
$1\frac{1}{4}$	$\frac{1}{2}$	4	$1\frac{1}{2}$	14	$3\frac{1}{2}$
$1\frac{1}{2}$	$\frac{1}{2}$	5	$1\frac{1}{2}$	16	4
2	1	6	$2\frac{1}{2}$	18	4
$2\frac{1}{2}$	$1\frac{1}{4}$	8	3	20	4
3	$1\frac{1}{4}$	10	$3\frac{1}{2}$	24	4

NOTES:

(1) The hub dimensions shall be at least as large as those of the standard flanges of the size to which the reduction is being made except flanges reducing to a size smaller than those of Columns 2, 4, and 6 may be made from blind flanges. See Example B.

(2) Class 150 flanges do not have a counterbore. Class 300 and higher pressure flanges will have depth of counterbore of 0.25 in. for NPS 2 and smaller tapping and 0.38 in. for NPS $2\frac{1}{2}$ and larger. The diameter *Q* of counterbore is the same as that given in the tables of the threaded flanges for the corresponding tapping.

(3) Minimum length of effective threads shall be at least equal to dimension *T* of the corresponding pressure class threaded flange as shown in tables but does not necessarily extend for the face of the flange. For thread of threaded flanges, see para. 6.9.

(4) For method of designating reducing threaded and reducing slip-on flanges, see para. 3.3 and the example below.

EXAMPLES:

A. The size designation is NPS 6 × $2\frac{1}{2}$ — Class 300 reducing threaded flange. This flange has the following dimensions:

NPS $2\frac{1}{2}$ = taper pipe thread tapping (ASME B1.20.1)
12.5 in. = diameter of regular NPS 6 Class 300 threaded flange
1.44 in. = thickness of regular NPS 6 Class 300 threaded flange
7.0 in. = diameter of hub for regular NPS 5 Class 300 threaded flange. Hub diameter may be one size smaller to reduce machining. In this example a hub diameter of NPS $2\frac{1}{2}$ would be the smallest acceptable.
0.62 in. = height of hub for regular NPS 5 Class 300 threaded flange

Other dimensions the same as for regular NPS 6 Class 300 threaded flange, Table F12.

B. The size designation is NPS 6 x 2 — Class 300 reducing threaded flange. Use regular NPS 6 Class 300 blind flange tapped with NPS 2 taper pipe thread (ASME B1.20.1).

Copyright ASME International
Provided by IHS under license with ASME
No reproduction or networking permitted without license from IHS
Not for Resale

CLASS 150 PIPE FLANGES AND FLANGED FITTINGS

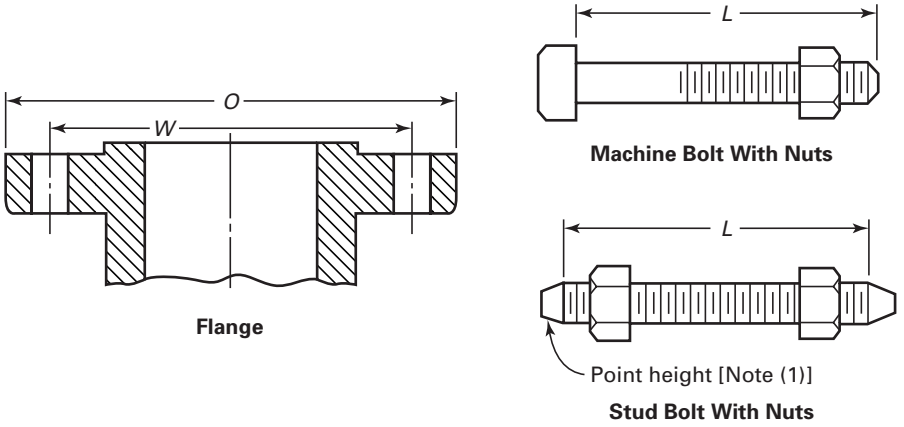

Table F7 Templates for Drilling CLass 150 Flanges

1	2	3	4	5	6	7	8	9
						Length of Bolts, *L* [Note (4)]		
		Drilling [Notes (2), (3)]				Stud Bolts [Note (1)]		Machine Bolts
Nominal Size, NPS	Outside Diameter of Flange, *O*	Diameter of Bolt Circle, *W*	Diameter of Bolt Holes	Number of Bolts	Diameter of Bolts	Raised Face 0.06 in.	Ring Joint	Raised Face 0.06 in.
1/2	3.50	2.38	5/8	4	1/2	2.25	...	2.00
3/4	3.88	2.75	5/8	4	1/2	2.50	...	2.00
1	4.25	3.12	5/8	4	1/2	2.50	3.00	2.25
1 1/4	4.62	3.50	5/8	4	1/2	2.75	3.25	2.25
1 1/2	5.00	3.88	5/8	4	1/2	2.75	3.25	2.50
2	6.00	4.75	3/4	4	5/8	3.25	3.75	2.75
2 1/2	7.00	5.50	3/4	4	5/8	3.50	4.00.	3.00
3	7.50	6.00	3/4	4	5/8	3.50	4.00	3.00
3 1/2	8.50	7.00	3/4	8	5/8	3.50	4.00	3.00
4	9.00	7.50	3/4	8	5/8	3.50	4.00	3.00
5	10.00	8.50	7/8	8	3/4	3.75	4.25	3.25
6	11.00	9.50	7/8	8	3/4	4.00	4.50	3.25
8	13.50	11.75	7/8	8	3/4	4.25	4.75	3.50
10	16.00	14.25	1	12	7/8	4.50	5.00	4.00
12	19.00	17.00	1	12	7/8	4.75	5.25	4.00
14	21.00	18.75	1 1/8	12	1	5.25	5.75	4.50
16	23.50	21.25	1 1/8	16	1	5.25	5.75	4.50
18	25.00	22.75	1 1/4	16	1 1/8	5.75	6.25	5.00
20	27.50	25.00	1 1/4	20	1 1/8	6.25	6.75	5.50
24	32.00	29.50	1 3/8	20	1 1/4	6.75	7.25	6.00

GENERAL NOTES:

(a) Dimensions are in inches.

(b) For other dimensions see Tables F8 and F9.

NOTES:

(1) Length of stud bolt does not include the height of the points. See para. 6.10.2.

(2) For flange bolt holes, see para. 6.5.

(3) For spot facing, see para. 6.6.

(4) Bolt lengths not shown in table may be determined in accordance with Annex D. See para. 6.10.2.

Copyright ASME International
Provided by IHS under license with ASME
No reproduction or networking permitted without license from IHS
Not for Resale

Copyright ASME International
Provided by IHS under license with ASME
No reproduction or networking permitted without license from IHS

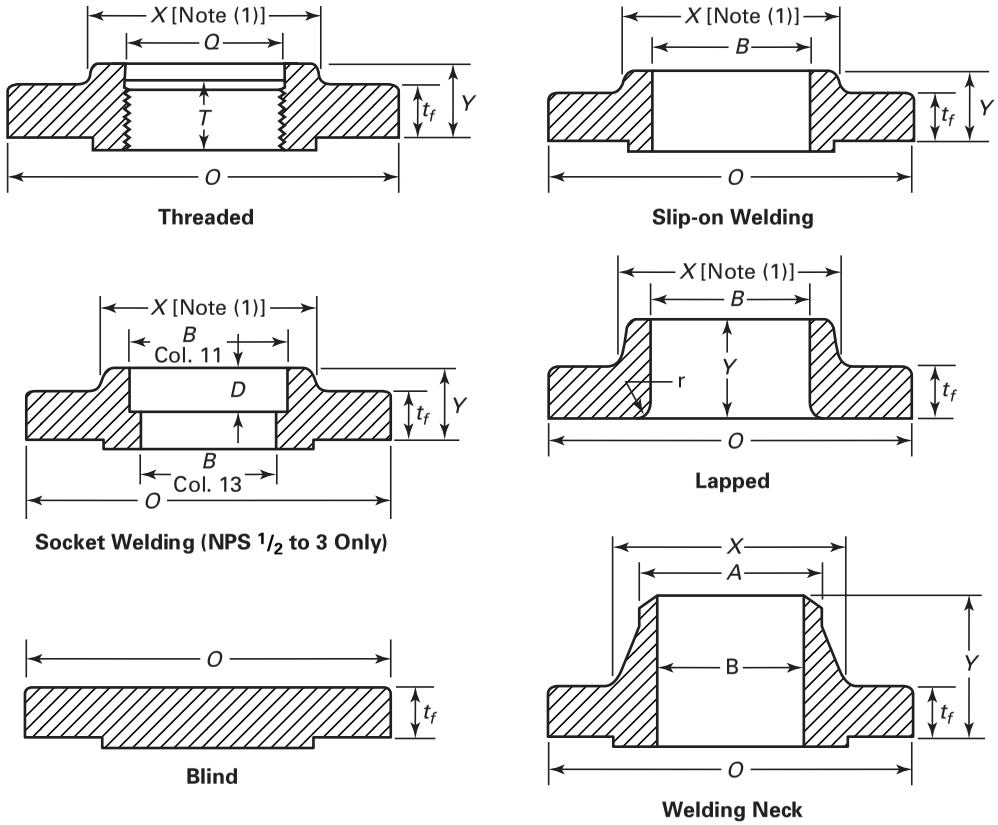

Table F8 Dimensions of Class 150 Flanges

1	2	3	4	5	6	7	8	9	10	11	12	13	14	15
						Length Through Hub				Bore				
Nominal Pipe Size	Outside Diameter of Flange, *O*	Thickness of Flange Min., t_f [Notes (2)–(4)]	Thickness Lap Joint Min.	Diameter of Hub, *X*	Diameter Beginning of Chamfer Welding Neck, *A* [Note (5)]	Threaded Slip-on Socket Welding, *Y*	Lapped, *Y*	Welding Neck, *Y*	Thread Length Threaded Min., *T* [Note (6)]	Slip-on Socket Welding, Min., *B*	Lapped Min., *B*	Welding Neck/ Socket Welding, *B* [Note (7)]	Corner Radius of Bore of Lapped Flange and Pipe, *r*	Depth of Socket, *D*
1/2	3.50	0.38	0.44	1.19	0.84	0.56	0.62	1.81	0.62	0.88	0.90	0.62	0.12	0.38
3/4	3.88	0.44	0.50	1.50	1.05	0.56	0.62	2.00	0.62	1.09	1.11	0.82	0.12	0.44
1	4.25	0.50	0.56	1.94	1.32	0.62	0.69	2.12	0.69	1.36	1.38	1.05	0.12	0.50
1 1/4	4.62	0.56	0.62	2.31	1.66	0.75	0.81	2.19	0.81	1.70	1.72	1.38	0.19	0.56
1 1/2	5.00	0.62	0.69	2.56	1.90	0.81	0.88	2.38	0.88	1.95	1.97	1.61	0.25	0.62

Not for Resale

Copyright ASME International
Provided by IHS under license with ASME
No reproduction or networking permitted without license from IHS

Table F8 Dimensions of Class 150 Flanges (Cont'd)

1	2	3	4	5	6	7	8	9	10	11	12	13	14	15
						Length Through Hub				Bore				
Nominal Pipe Size	Outside Diameter of Flange, *O*	Thickness of Flange Min., t_f [Notes (2)–(4)]	Thickness Lap Joint Min.	Diameter of Hub, *X*	Diameter Beginning of Chamfer Welding Neck, *A* [Note (5)]	Threaded Slip-on Socket Welding, *Y*	Lapped, *Y*	Welding Neck, *Y*	Thread Length Threaded Min., *T* [Note (6)]	Slip-on Socket Welding, Min., *B*	Lapped Min., *B*	Welding Neck/ Socket Welding, *B* [Note (7)]	Corner Radius of Bore of Lapped Flange and Pipe, *r*	Depth of Socket, *D*
2	6.00	0.69	0.75	3.06	2.38	0.94	1.00	2.44	1.00	2.44	2.46	2.07	0.31	0.69
2½	7.00	0.81	0.88	3.56	2.88	1.06	1.12	2.69	1.12	2.94	2.97	2.47	0.31	0.75
3	7.50	0.88	0.94	4.25	3.50	1.12	1.19	2.69	1.19	3.57	3.60	3.07	0.38	0.81
3½	8.50	0.88	0.94	4.81	4.00	1.19	1.25	2.75	1.25	4.07	4.10	3.55	0.38	. . .
4	9.00	0.88	0.94	5.31	4.50	1.25	1.31	2.94	1.31	4.57	4.60	4.03	0.44	. . .
5	10.00	0.88	0.94	6.44	5.56	1.38	1.44	3.44	1.44	5.66	5.69	5.05	0.44	. . .
6	11.00	0.94	1.00	7.56	6.63	1.50	1.56	3.44	1.56	6.72	6.75	6.07	0.50	. . .
8	13.50	1.06	1.12	9.69	8.63	1.69	1.75	3.94	1.75	8.72	8.75	7.98	0.50	. . .
10	16.00	1.12	1.19	12.00	10.75	1.88	1.94	3.94	1.94	10.88	10.92	10.02	0.50	. . .
12	19.00	1.19	1.25	14.38	12.75	2.12	2.19	4.44	2.19	12.88	12.92	12.00	0.50	. . .
14	21.00	1.31	1.38	15.75	14.00	2.19	3.12	4.94	2.25	14.14	14.18	To	0.50	. . .
16	23.50	1.38	1.44	18.00	16.00	2.44	3.44	4.94	2.50	16.16	16.19	be	0.50	. . .
18	25.00	1.50	1.56	19.88	18.00	2.62	3.81	5.44	2.69	18.18	18.20	Specified	0.50	. . .
20	27.50	1.62	1.69	22.00	20.00	2.81	4.06	5.62	2.88	20.20	20.25	by	0.50	. . .
24	32.00	1.81	1.88	26.12	24.00	3.19	4.38	5.94	3.25	24.25	24.25	Purchaser	0.50	. . .

Not for Resale

Notes to Table F8

GENERAL NOTES:

(a) Dimensions are in inches.
(b) For tolerances, see para. 7.
(c) For facings, see para. 6.4.
(d) For flange bolt holes, see para. 6.5 and Table F7.
(e) For spot facing, see para. 6.6.
(f) For reducing threaded and slip-on flanges, see Table F6.
(g) Blind flanges may be made with or without hubs at the manufacturers option.
(h) For reducing welding neck flanges, see para. 6.8.

NOTES:

(1) This dimension is for large end of hub, which may be straight or tapered. Taper shall not exceed 7 deg on threaded, slip-on, socket-welding, and lapped flanges.
(2) The minimum thickness of these loose flanges, in sizes NPS $3\frac{1}{2}$ and smaller, is slightly greater than the thickness of flanges on fittings, Table F9, which are reinforced by being cast integral with the body of the fitting.
(3) When these flanges are required with flat face, the flat face may be either the full t_f dimension thickness plus 0.06 in., or the t_f dimension thickness without the raised face height. See para. 6.3.2 for additional restrictions.
(4) The flange dimensions illustrated are for regularly furnished 0.06 in. raised face (except lapped); for requirements of other facings, see Fig F7.
(5) For welding end bevel, see para. 6.7.
(6) For thread of threaded flanges, see para. 6.9.
(7) Dimensions in Column 13 correspond to the inside diameters of pipe as given in ASME B36.10M for Standard Wall pipe. Thickness of Standard Wall is the same as Schedule 40 in sizes NPS 10 and smaller. Tolerances in para. 7.5.2 apply. These bore sizes are furnished unless otherwise specked by the purchaser.

Copyright ASME International
Provided by IHS under license with ASME
No reproduction or networking permitted without license from IHS Not for Resale

Copyright ASME International
Provided by IHS under license with ASME
No reproduction or networking permitted without license from IHS

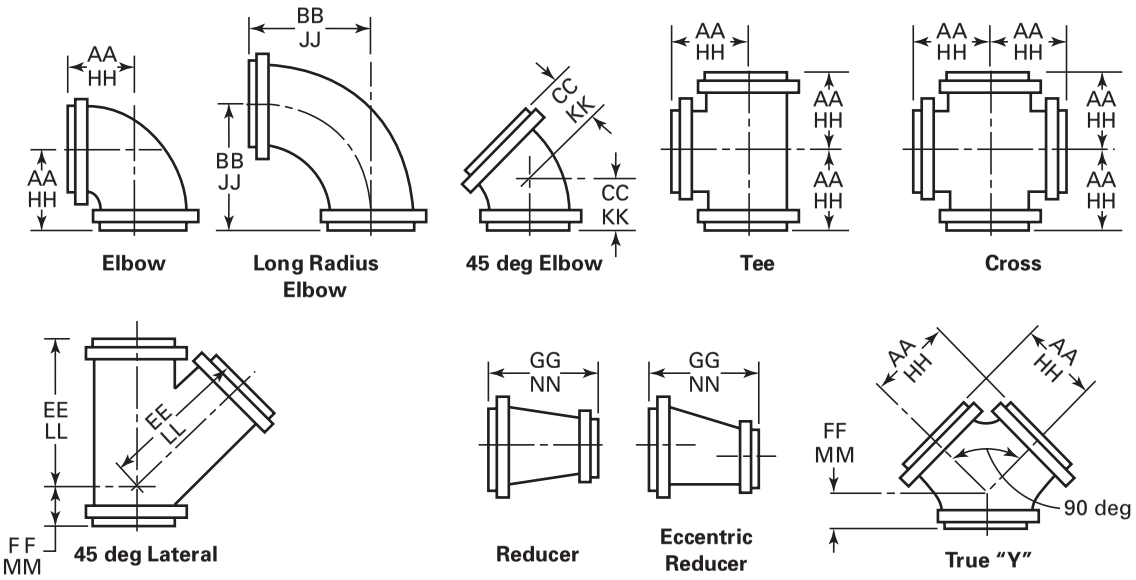

Table F9 Dimensions of Class 150 Flanged Fittings

1	2	3	4	5	6	7	8	9	10	11	12
					0.06 in. Raised Face (Flange Edge) [Note (4)]						
Nominal Pipe Size, NPS	Outside Diameter of Flange, *O*	Thickness of Flange Min., t_f [Notes (1)–(3)]	Wall Thickness of Fitting Min., t_m	Inside Diameter of Fitting, *d*	Center-to-Contact Surface of Raised Face Elbow, Tee, Cross, and True "Y", AA	Center-to-Contact Surface of Raised Face Long Radius Elbow, BB	Center-to-Contact Surface of Raised Face 45 deg Elbow, CC	Long Center-to-Contact Surface of Raised Face Lateral, EE	Short Center-to-Contact Surface of Raised Face Lateral and True "Y", FF	Contact Surface-to-Contact Surface of Raised Face Reducer, GG [Note (5)]	Ring Joint [Note (4)] Center-to-End Elbow Tee, Cross, and True "Y", HH [Note (6)]
1/2	3.5	0.31	0.11	0.50	...	...	...	...	...	...	...
3/4	3.88	0.34	0.12	0.75	...	...	...	...	...	...	...
1	4.25	0.38	0.16	1.00	3.50	5.00	1.75	5.75	1.75	4.50	3.75
1 1/4	4.62	0.44	0.19	1.25	3.75	5.50	2.00	6.25	1.75	4.50	4.00
1 1/2	5.00	0.5	0.19	1.50	4.00	6.00	2.25	7.00	2.00	4.50	4.25
2	6.00	0.56	0.22	2.00	4.50	6.50	2.50	8.00	2.50	5.00	4.75
2 1/2	7.00	0.62	0.22	2.50	5.00	7.00	3.00	9.50	2.50	5.50	5.25
3	7.50	0.69	0.22	3.00	5.50	7.75	3.00	10.00	3.00	6.00	5.75
3 1/2	8.50	0.75	0.25	3.50	6.00	8.50	3.50	11.50	3.00	6.50	6.25
4	9.00	0.88	0.25	4.00	6.50	9.00	4.00	12.00	3.00	7.00	6.75

Not for Resale

Copyright ASME International
Provided by IHS under license with ASME
No reproduction or networking permitted without license from IHS

Table F9 Dimensions of Class 150 Flanged Fittings (Cont'd)

1	2	3	4	5	6	7	8	9	10	11	12
					0.06 in. Raised Face (Flange Edge) [Note (4)]						Ring Joint [Note (4)]
Nominal Pipe Size, NPS	Outside Diameter of Flange, *O*	Thickness of Flange Min., t_f [Notes (1)–(3)]	Wall Thickness of Fitting Min., t_m	Inside Diameter of Fitting, *d*	Center-to-Contact Surface of Raised Face Elbow, Tee, Cross, and True "Y", AA	Center-to-Contact Surface of Raised Face Long Radius Elbow, BB	Center-to-Contact Surface of Raised Face 45 deg Elbow, CC	Long Center-to-Contact Surface of Raised Face Lateral, EE	Short Center-to-Contact Surface of Raised Face Lateral and True "Y", FF	Contact Surface-to-Contact Surface of Raised Face Reducer, GG [Note (5)]	Center-to-End Elbow Tee, Cross, and True "Y", HH [Note (6)]
5	10.00	0.88	0.28	5.00	7.50	10.25	4.50	13.50	3.50	8.00	7.75
6	11.00	0.94	0.28	6.00	8.00	11.50	5.00	14.50	3.50	9.00	8.25
8	13.50	1.06	0.31	8.00	9.00	14.00	5.50	17.50	4.50	11.00	9.25
10	16.00	1.12	0.34	10.00	11.00	16.50	6.50	20.50	5.00	12.00	11.25
12	19.00	1.19	0.38	12.00	12.00	19.00	7.50	24.50	6.50	14.00	12.25
14	21.00	1.31	0.41	13.25	14.00	21.50	7.50	27.00	6.00	16.00	14.25
16	23.50	1.38	0.44	15.25	15.00	24.00	8.00	30.00	6.50	18.00	15.25
l8	25.00	1.5	0.47	17.25	16.50	26.50	8.50	32.00	7.00	19.00	16.75
20	27.50	1.62	0.50	19.25	18.00	29.00	9.50	35.00	8.00	20.00	18.25
24	32.00	1.81	0.57	23.25	22.00	34.00	11.00	40.50	9.00	24.00	22.25

Not for Resale

Copyright ASME International
Provided by IHS under license with ASME
No reproduction or networking permitted without license from IHS

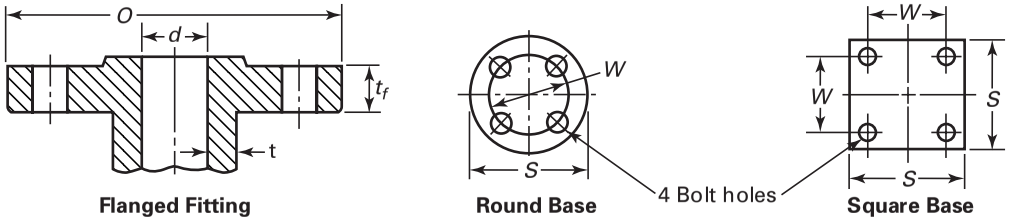

Flanged Fitting | Round Base | Square Base

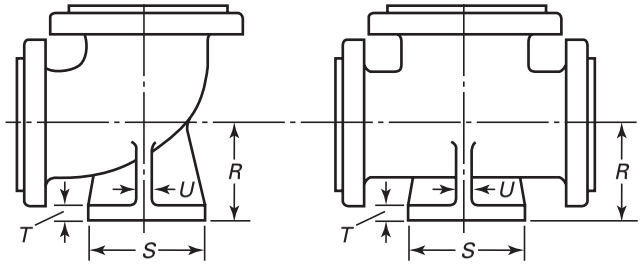

Base Elbow | Base Tee

Table F9 Dimensions of Class 150 Flanged Fittings (Cont'd)

13	14	15	16	17	18	19	20	21	22	23	1
Ring Joint [Note (4)]											
Center-to-End Long Radius Elbow, JJ [Note (6)]	Center-to-End 45 deg Elbow, KK [Note (6)]	Long Center-to-End Lateral, LL [Note (6)]	Short Center-to-End Lateral and True "Y", MM [Note (6)]	End-to-End Reducer NN	Center-to-Base *R* [Notes (7)–(9)]	Diameter of Round Base or Width of Square Base, *S* [Note (7)]	Thickness of Base, *T* [Notes (7)–(10)]	Thickness of Ribs, *U* [Note (7)]	Base Drilling [Note (11)]		Nominal Pipe Size NPS
									Bolt Circle or Bolt Spacing, *W*	Diameter of Drilled Holes	
...	...	...	...	Please	...	...	...	...	...	...	1/2
...	...	...	...	see	...	...	...	...	...	...	3/4
5.25	2.00	6.00	2.00	Note (5)	...	...	...	...	...	...	1
5.75	2.25	6.50	2.00	and	...	...	...	...	...		1 1/4
6.25	2.50	7.25	2.25	Note (6).	...	...	...	...	...		1 1/2
6.75	2.75	8.25	2.75		4.12	4.62	0.50	0.50	3.50	5/8	2
7.25	3.25	9.75	2.75		4.50	4.62	0.50	0.50	3.50	5/8	2 1/2
8.00	3.25	10.25	3.25		4.88	5.00	0.56	0.56	3.88	5/8	3
8.75	3.75	11.75	3.25		5.25	5.00	0.56	0.56	3.88	5/8	3 1/2
9.25	4.25	12.25	3.25		5.50	6.00	0.62	0.62	4.75	3/4	4

Not for Resale

Copyright ASME International
Provided by IHS under license with ASME
No reproduction or networking permitted without license from IHS

Table F9 Dimensions of Class 150 Flanged Fittings (Cont'd)

13	14	15	16	17	18	19	20	21	22	23	1
Ring Joint [Note (4)]									Base Drilling [Note (11)]		
Center-to-End Long Radius Elbow, JJ [Note (6)]	Center-to-End 45 deg Elbow, KK [Note (6)]	Long Center-to-End Lateral, LL [Note (6)]	Short Center-to-End Lateral and True "Y", MM [Note (6)]	End-to-End Reducer NN	Center-to-Base *R* [Notes (7)–(9)]	Diameter of Round Base or Width of Square Base, *S* [Note (7)]	Thickness of Base, *T* [Notes (7)–(10)]	Thickness of Ribs, *U* [Note (7)]	Bolt Circle or Bolt Spacing, *W*	Diameter of Drilled Holes	Nominal Pipe Size NPS
10.50	4.75	13.75	3.75	Please	6.25	7.00	0.69	0.65	5.50	3/4	5
11.75	5.25	14.75	3.75	see	7.00	7.00	0.69	0.65	5.50	3/4	6
14.25	5.75	17.75	4.75	Note (5)	8.38	9.00	0.94	0.94	7.50	3/4	8
16.75	6.75	20.75	5.25	and	9.75	9.00	0.94	0.94	7.50	3/4	10
19.25	7.75	24.75	5.75	Note (6).	11.25	11.00	1.00	1.00	9.50	7/8	12
21.75	7.75	27.25	6.25		12.50	11.00	1.00	1.00	9.50	7/8	14
24.25	8.25	30.25	6.75		13.75	11.00	1.00	1.00	9.50	7/8	16
26.75	8.75	32.25	7.25		15.00	13.50	1.12	1.12	11.75	7/8	18
29.25	9.75	35.25	8.25		16.00	13.50	1.12	1.12	11.75	7/8	20
34.25	11.25	40.75	9.25		18.50	13.50	1.12	1.12	11.75	7/8	24

GENERAL NOTE:

(a) Dimensions of Table F9 are in inches.
(b) For tolerances, see para. 7.
(c) For facings, see para. 6.4.
(d) For flange bolt holes, see para. 6.5 and Table F7.
(e) For spot facing, see para. 6.6.
(f) For intersecting centerlines, center-to-contact surface, and center-to-end dimensions of side outlet fittings, see para. 6.2.4.
(g) For center-to-contact surface and center-to-end dimensions of special degree elbows, see para. 6.2.5.
(h) For reinforcement of certain fittings, see para. 6.1.
(i) For drains, see para. 6.12.

NOTES:

(1) The thickness of flange minimum dimensions for loose flanges, Table F9, sizes NPS $3\frac{1}{2}$ and smaller, are slightly heavier than for flanges on these fittings, which are reinforced by being cast integral with the body of fitting.
(2) These fittings may be supplied with a flat face flange. The flat face may be either the full t_f, dimension thickness plus 0.06 in. or the t_f dimension thickness without the raised face height. See para. 6.3.2 for additional restrictions.
(3) The thickness of flange dimension illustrated is for regularly furnished 0.06 in. raised face (except lapped); for thickness requirements of other facings, see Fig. F7.
(4) For center-to-contact surface and center-to-end dimensions of reducing fittings, see para. 6.2.3.
(5) For contact surface-to-contact surface and end-to-end dimensions of reducers and eccentric reducers, see para. 6.2.3.
(6) These dimensions apply to straight sizes only. See paras. 6.2.3 and 6.4.2.2. For center-to-end dimensions of reducing fittings or end-to-end dimensions of reducers, use center-to-contact surface or contact surface-to-contact surface dimensions of 0.06 in. raised face (flange edge) for largest opening and add the proper height to provide for ring joint groove applying to each flange. See Table F5 for ring joint facing dimensions.

Not for Resale

Notes to Table F9 (Cont'd)

(7) The base dimensions apply to all straight and reducing sizes.
(8) For reducing fittings, the size, and center-to-face dimension of base are determined by the size of the largest opening of fittings. In the case of reducing base elbows, orders shall specify whether the base shall be opposite the larger or smaller opening.
(9) Bases shall be plain faced, unless otherwise specified, and the center-to-base dimension *R* shall be the finished dimension.
(10) Bases may be cast integral or attached as weldments at the option of the manufacturer.
(11) The bases of these fittings are intended for support in compression and are not to be used for anchors or supports in tension or shear.

Copyright ASME International
Provided by IHS under license with ASME
No reproduction or networking permitted without license from IHS
Not for Resale

CLASS 300 PIPE FLANGES, AND FLANGED FITTINGS

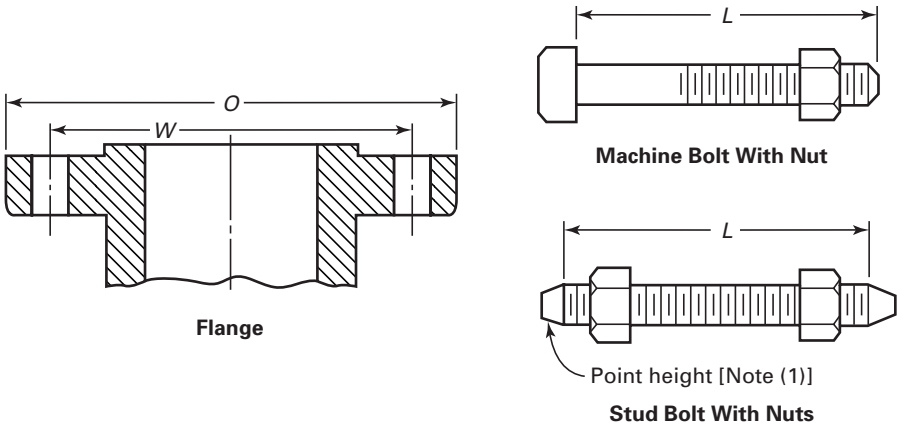

Flange

Machine Bolt With Nut

Stud Bolt With Nuts

Table F10 Templates for Drilling Class 300 Flanges

1	2	3	4	5	6	7	8	9
						Length of Bolts, *L* [Note (4)]		
		Drilling [Note (2), (3)]				Stud Bolts [Note (1)]		Machine Bolts
Nominal Pipe Size	Outside Diameter of Flange, *O*	Diameter of Bolt Circle, *W*	Diameter of Bolt Holes	Number of Bolts	Diameter of Bolts	Raised Face 0.06 in.	Ring Joint	Raised Face 0.06 in.
1/2	3.75	2.62	5/8	4	1/2	2.50	3.00	2.25
3/4	4.62	3.25	3/4	4	5/8	3.00	3.50	2.50
1	4.88	3.50	3/4	4	5/8	3.00	3.50	2.50
1 1/4	5.25	3.88	3/4	4	5/8	3.25	3.75	2.75
1 1/2	6.12	4.50	7/8	4	3/4	3.50	4.00	3.00
2	6.50	5.00	3/4	8	5/8	3.50	4.00	3.00
2 1/2	7.50	5.88	7/8	8	3/4	4.00	4.50	3.25
3	8.25	6.62	7/8	8	3/4	4.25	4.75	3.50
3 1/2	9.00	7.25	7/8	8	3/4	4.25	5.00	3.75
4	10.00	7.88	7/8	8	3/4	4.50	5.00	3.75
5	11.00	9.25	7/8	8	3/4	4.75	5.25	4.25
6	12.50	10.62	7/8	12	3/4	4.75	5.50	4.25
8	15.00	13.00	1	12	7/8	5.50	6.00	4.75
10	17.50	15.25	1 1/8	16	1	6.25	6.75	5.50
12	20.50	17.75	1 1/4	16	1 1/8	6.75	7.25	5.75
14	23.00	20.25	1 1/4	20	1 1/8	7.00	7.50	6.25
16	25.50	22.50	1 3/8	20	1 1/4	7.50	8.00	6.50
18	28.00	24.75	1 3/8	24	1 1/4	7.75	8.25	6.75
20	30.50	27.00	1 3/8	24	1 1/4	8.00	8.75	7.25
24	36.00	32.00	1 5/8	24	1 1/2	9.00	10.00	8.00

GENERAL NOTES:

(a) Dimensions are in inches.

(b) For other dimensions see, Tables F11 and F12.

NOTES:

(1) Length of stud bolt does not include the height of the points. See para. 6.10.2.

(2) For flange bolt holes, see para. 6.5.

(3) For spot facing, see para. 6.6.

(4) Bolt lengths not shown in the Table may be determined in accordance with Annex D. See para. 6.10.2.

Copyright ASME International
Provided by IHS under license with ASME
No reproduction or networking permitted without license from IHS
Not for Resale

Copyright ASME International
Provided by IHS under license with ASME
No reproduction or networking permitted without license from IHS

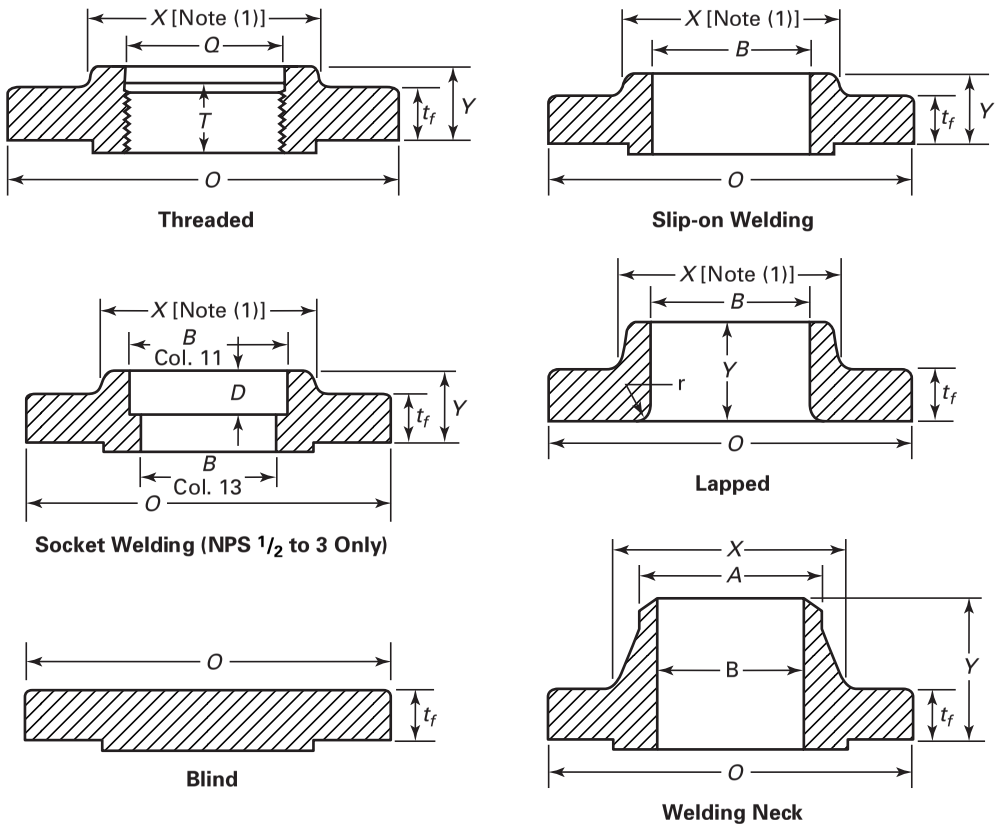

Table F11 Dimensions of Class 300 Flanges

1	2	3	4	5	6	7	8	9	10	11	12	13	14	15	16
						Length Through Hub				Bore					
Nominal Pipe Size	Outside Diamter of Flange, *O*	Thickness of Flange Min., t_f [Notes (2)-(4)]	Thickness of Lap Joint, t_f	Diameter of Hub, *X*	Diameter Beginning of Chamfer Welding Neck, *A* [Note (5)]	Threaded Slip-on Socket Welding, *Y*	Lapped, *Y*	Welding Neck, *Y*	Thread Length Threaded Min., *T* [Note (5)]	Slip-on Socket Welding Min., *B*	Lapped Min., *B*	Welding Neck/ Socket Welding, *B* [Note (6)]	Corner Radius of Bore of Lapped Flange and Pipe, *r*	Counter-bore Threaded Flange Min., *Q*	Depth of Socket, *D*
1/2	3.75	0.50	0.56	1.50	0.84	0.81	0.88	2.00	0.62	0.88	0.90	0.62	0.12	0.93	0.38
3/4	4.62	0.56	0.62	1.88	1.05	0.94	1.00	2.19	0.62	1.09	1.11	0.82	0.12	1.14	0.44
1	4.88	0.62	0.69	2.12	1.32	1.00	1.06	2.38	0.69	1.36	1.38	1.05	0.12	1.41	0.50
1 1/4	5.25	0.69	0.75	2.50	1.66	1.00	1.06	2.50	0.81	1.70	1.72	1.38	0.19	1.75	0.56
1 1/2	6.12	0.75	0.81	2.75	1.90	1.13	1.19	2.63	0.88	1.95	1.97	1.61	0.25	1.98	0.62

Not for Resale

Copyright ASME International
Provided by IHS under license with ASME
No reproduction or networking permitted without license from IHS

Table F11 Dimensions of Class 300 Flanges (Cont'd)

1	2	3	4	5	6	7	8	9	10	11	12	13	14	15	16
						Length Through Hub				Bore					
Nominal Pipe Size	Outside Diamter of Flange, *O*	Thickness of Flange Min., t_f [Notes (2)–(4)]	Thickness Lap Joint Min., t_f	Diameter of Hub, *X*	Hub Diameter Beginning of Chamfer Welding Neck, *A* [Note (5)]	Threaded Slip-on Socket Welding, *Y*	Lapped, *Y*	Welding Neck, *Y*	Thread Length Threaded Min., *T* [Note (6)]	Slip-on Socket Welding, Min., *B*	Lapped Min., *B*	Welding Neck/ Socket Welding, *B* [Note (6)]	Corner Radius of Bore of Lapped Flange and Pipe, *r*	Counter-bore Threaded Flange Min., *Q*	Depth of Socket, *D*
2	6.50	0.81	0.88	3.31	2.38	1.25	1.31	2.69	1.12	2.44	2.46	2.07	0.31	2.50	0.69
2½	7.50	0.94	1.00	3.94	2.88	1.44	1.50	2.94	1.25	2.94	2.97	2.47	0.31	3.00	0.75
3	8.25	1.06	1.12	4.62	3.50	1.63	1.69	3.06	1.25	3.57	3.60	3.07	0.38	3.63	0.81
3½	9.00	1.12	1.19	5.25	4.00	1.69	1.75	3.13	1.44	4.07	4.10	3.55	0.38	4.13	. . .
4	10.00	1.19	1.25	5.75	4.50	1.82	1.88	3.32	1.44	4.57	4.60	4.03	0.44	4.63	. . .
5	11.00	1.31	1.38	7.00	5.56	1.94	2.00	3.82	1.69	5.66	5.69	5.05	0.44	5.69	. . .
6	12.50	1.38	1.44	8.12	6.63	2.00	2.06	3.82	1.81	6.72	6.75	6.07	0.50	6.75	. . .
8	15.00	1.56	1.62	10.25	8.63	2.38	2.44	4.32	2.00	8.72	8.75	7.98	0.50	8.75	. . .
10	17.50	1.81	1.88	12.62	10.75	2.56	3.75	4.56	2.19	10.88	10.92	10.02	0.50	10.88	. . .
12	20.50	1.94	2.00	14.75	12.75	2.82	4.00	5.06	2.38	12.88	12.92	12.00	0.50	12.94	. . .
14	23.00	2.06	2.12	16.75	14.00	2.94	4.38	5.56	2.50	14.14	14.18	To	0.50	14.19	. . .
16	25.50	2.19	2.25	19.00	16.00	3.19	4.75	5.69	2.69	16.16	16.19	be	0.50	16.19	. . .
18	28.00	2.31	2.38	21.00	18.00	3.44	5.12	6.19	2.75	18.18	18.20	Speci-fied	0.50	18.19	. . .
20	30.50	2.44	2.50	23.12	20.00	3.69	5.50	6.32	2.88	20.20	20.25	by	0.50	20.19	. . .
24	36.00	2.69	2.75	27.62	24.00	4.13	6.00	6.56	3.25	24.25	24.25	Pur-chaser	0.50	24.19	. . .

GENERAL NOTES:

(a) Dimensions of Table F11 are in inches.
(b) For tolerances, see para. 7.
(c) For facings, see para. 6.4.
(d) For flange bolt holes, see para. 6.5 and Table F10.
(e) For spot facing, see para. 6.6.
(f) For reducing threaded and slip-on flanges, see Table F6.
(g) Blind flanges may be made with or without hubs at the manufacturer's option.
(h) For reducing welding neck flanges, see para. 6.8.

Not for Resale

Notes to Table F11

NOTES:

(1) This dimension is for large end of hub, which may be straight or tapered. Taper shall not exceed 7 deg on threaded, slip-on, socket-welding, and lapped flanges. This dimension is defined as the diameter at the intersection between the hub taper and the back face of the flange.

(2) These flanges may be supplied with a flat face. The flat face may be either the full t_f dimension thickness plus 0.06 in. or the t_f dimension thickness without the raised face height. See para. 6.3.2 for additional restrictions.

(3) The flange dimensions illustrated are for regularly furnished 0.06 in raised face (except lapped); for requirements of other facings, see Fig. F-7.

(4) For welding end bevel, see para. 6.7.

(5) For thread of threaded flanges, see para. 6.9.

(6) Dimensions in Column 13 correspond to the inside diameters of pipe as give in ASME B36.10M for Standard Wall pipe. Standard Wall dimensions are the same as Schedule 40 in sizes NPS 10 and smaller. Tolerances in para. 7.5.2 apply. These bore sizes are furnished unless otherwise specified by the purchaser.

Copyright ASME International
Provided by IHS under license with ASME
No reproduction or networking permitted without license from IHS
Not for Resale

Copyright ASME International
Provided by IHS under license with ASME
No reproduction or networking permitted without license from IHS

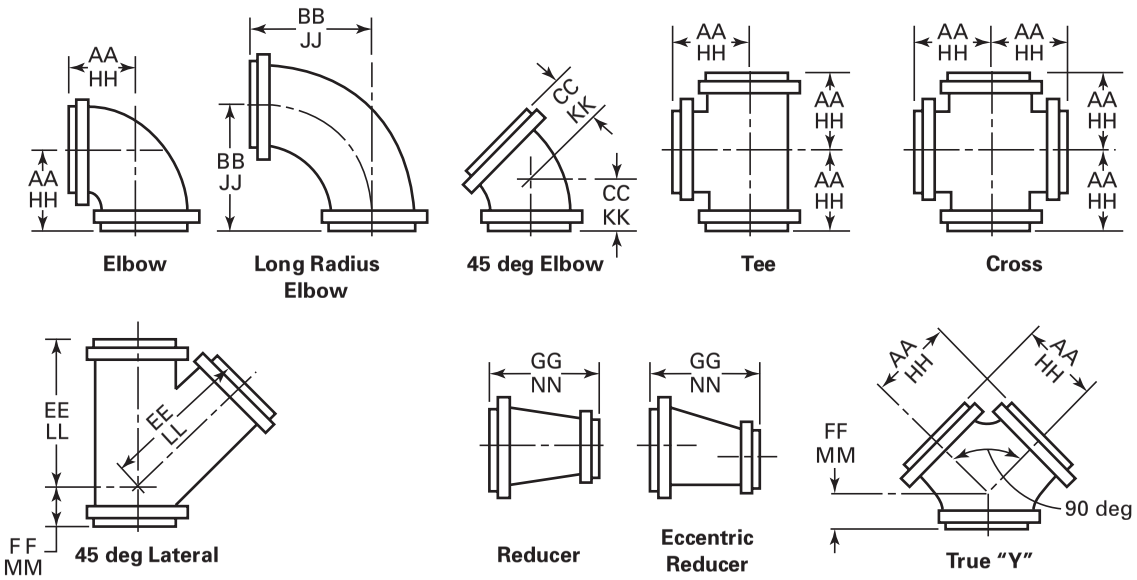

Table F12 Dimensions of Class 300 Flanged Fittings

1	2	3	4	5	6	7	8	9	10	11	12
					0.06 in. Raised Face (Flange Edge) [Note (4)]						Ring Joint [Note (2)]
Nominal Pipe Size, NPS	Outside Diameter of Flange, *O*	Thickness of Flange Min., t_f [Notes (1), (2), (11)]	Wall Thickness of Fitting Min., t_m	Inside Diameter of Fitting, *d*	Center-to-Contact Surface of Raised Face Elbow, Tee, Cross, and True "Y", AA	Center-to-Contact Surface of Raised Face Long Radius Elbow, BB	Center-to-Contact Surface of Raised Face 45 deg Elbow, CC	Long Center-to-Contact Surface of Raised Face Lateral, EE	Short Center-to-Contact Surface of Raised Face Lateral and True "Y", FF	Contact Surface-to-Contact Surface of Raised Face Reducer, GG [Note (3)]	Center-to-End Elbow Tee, Cross, and True "Y", HH [Note (4)]
1	4.88	0.62	0.19	1.00	4.00	5.00	2.25	6.50	2.00	4.50	4.25
1¼	5.25	0.69	0.19	1.25	4.25	5.50	2.50	7.25	2.25	4.50	4.50
1½	6.12	0.75	0.19	1.50	4.50	6.00	2.75	8.50	2.50	4.50	4.75
2	6.50	0.81	0.25	2.00	5.00	6.50	3.00	9.00	2.50	5.00	5.31
2½	7.50	0.94	0.25	2.50	5.50	7.00	3.50	10.50	2.50	5.50	5.81
3	8.25	1.06	0.28	3.00	6.00	7.75	3.50	11.00	3.00	6.00	6.31
3½	9.00	1.12	0.29	3.50	6.50	8.50	4.00	12.50	3.00	6.50	6.81
4	10.00	1.19	0.31	4.00	7.00	9.00	4.50	13.50	3.00	7.00	7.31

Not for Resale

Copyright ASME International
Provided by IHS under license with ASME
No reproduction or networking permitted without license from IHS

Table F12 Dimensions of Class 300 Flanged Fittings (Cont'd)

1	2	3	4	5	6	7	8	9	10	11	12
					0.06 in. Raised Face (Flange Edge) [Note (4)]						Ring Joint [Note (2)]
Nominal Pipe Size, NPS	Outside Diameter of Flange, *O*	Thickness of Flange Min., t_f [Notes (1), (2), (11)]	Wall Thickness of Fitting Min., t_m	Inside Diameter of Fitting, *d*	Center-to-Contact Surface of Raised Face Elbow, Tee, Cross, and True "Y", AA	Center-to-Contact Surface of Raised Face Long Radius Elbow, BB	Center-to-Contact Surface of Raised Face 45 deg Elbow, CC	Long Center-to-Contact Surface of Raised Face Lateral, EE	Short Center-to-Contact Surface of Raised Face Lateral and True "Y", FF	Contact Surface-to-Contact Surface of Raised Face Reducer, GG [Note (3)]	Center-to-End Elbow Tee, Cross, and True "Y", HH [Note (4)]
5	11.00	1.31	0.38	5.00	8.00	10.25	5.00	15.00	3.50	8.00	8.31
6	12.50	1.38	0.38	6.00	8.50	11.50	5.50	17.50	4.00	9.00	8.81
8	15.00	1.56	0.44	8.00	10.00	14.00	6.00	20.50	5.00	11.00	10.31
10	17.50	1.81	0.50	10.00	11.50	16.50	7.00	24.00	5.50	12.00	11.81
12	20.50	1.94	0.56	12.00	13.00	19.00	8.00	27.50	6.00	14.00	13.31
14	23.00	2.06	0.62	13.25	15.00	21.50	8.50	31.00	6.50	16.00	15.31
16	25.50	2.19	0.69	15.25	16.50	24.00	9.50	34.50	7.50	18.00	10.81
18	28.00	2.31	0.75	17.00	18.00	26.50	10.00	37.50	8.00	19.00	18.31
20	30.50	2.44	0.81	19.00	19.50	29.00	10.50	40.50	8.50	20.00	19.89
24	36.00	2.69	0.94	23.00	22.50	34.00	12.00	47.50	10.00	24.00	22.94

Not for Resale

Copyright ASME International
Provided by IHS under license with ASME
No reproduction or networking permitted without license from IHS

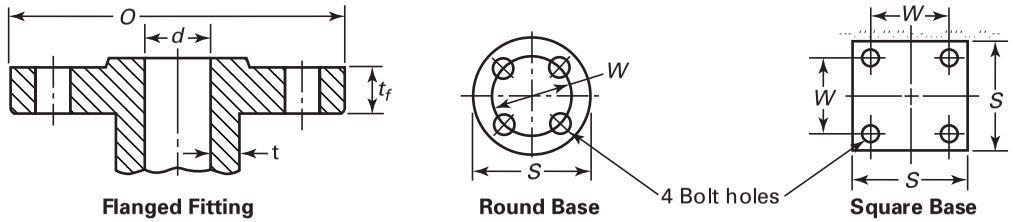

Flanged Fitting | Round Base | Square Base

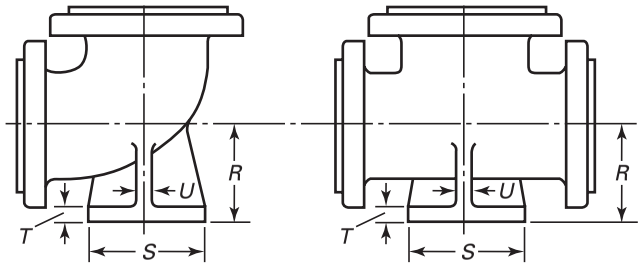

Base Elbow | Base Tee

Table F12 Dimensions of Class 300 Flanged Fittings (Cont'd)

13	14	15	16	17	18	19	20	21	22	23	1
Ring Joint [Note (4)]											
Center-to-End Long Radius Elbow JJ [Note (5)]	Center-to-End 45 deg Elbow, KK [Note (5)]	Long Center-to-End Lateral LL, [Note (5)]	Short Center-to-End Lateral And True "Y", MM [Note (5)]	End-to-End Reducer, NN [Notes (4), (5)]	Center-to-Base *R* [Notes (6)–(8)]	Diameter of Round Base or Width of Square Base, *S* [Note (6)]	Thickness of Base, *T* [Notes (6)–(9)]	Thickness of Ribs, *U* [Note (6)]	Base Drilling [Note (10)] Bolt Circle or Bolt Spacing, *W*	Base Drilling [Note (10)] Diameter of Drilled Holes	Nominal Pipe Size, NPS
5.25	2.50	6.75	2.25	...	...	...	...	...	...	...	1
5.75	2.75	7.50	2.50	...	...	...	...	...	...	...	1¼
6.25	3.00	8.75	2.75	...	...	...	...	...	...	...	1½
6.81	3.31	9.31	2.81	...	4.50	5.25	0.75	0.50	3.88	¾	2
7.31	3.81	10.81	2.81	...	4.75	5.25	0.75	0.50	3.88	¾	2½
8.06	3.81	11.31	3.31	...	5.25	6.12	0.81	0.62	4.50	⅞	3
8.81	4.31	12.81	3.31	...	5.62	6.12	0.81	0.62	4.50	⅞	3½
9.31	4.88	13.81	3.31	...	6.00	6.50	0.88	0.62	5.00	¾	4
10.56	5.31	15.31	3.81	...	6.75	7.50	1.00	0.75	5.88	⅞	5
11.81	5.81	17.81	4.31	...	7.50	7.50	1.00	0.75	5.88	⅞	6
14.31	6.31	20.81	5.31	...	9.00	10.00	1.25	0.88	7.88	⅞	8
16.81	7.31	24.31	5.81	...	10.50	10.00	1.25	0.88	7.88	⅞	10
19.31	8.31	27.81	6.31	...	12.00	12.50	1.44	1.00	10.62	⅞	12

Not for Resale

Copyright ASME International
Provided by IHS under license with ASME
No reproduction or networking permitted without license from IHS

Table F12 Dimensions of Class 300 Flanged Fittings (Cont'd)

13	14	15	16	17	18	19	20	21	22	23	1
Ring Joint [Note (4)]											
Center-to-End Long Radius Elbow JJ [Note (5)]	Center-to-End 45 deg Elbow, KK [Note (5)]	Long Center-to-End Lateral LL, [Note (5)]	Short Center-to-End Lateral And True "Y", MM [Note (5)]	End-to-End Reducer, NN [Notes (4), (5)]	Center-to-Base *R* [Notes (6)–(8)]	Diameter of Round Base or Width of Square Base, *S* [Note (6)]	Thickness of Base, *T* [Notes (6)–(9)]	Thickness of Ribs, *U* [Note (6)]	Base Drilling [Note (10)]		Nominal Pipe Size, NPS
									Bolt Circle or Bolt Spacing, *W*	Diameter of Drilled Holes	
21.81	8.81	31.31	6.81	...	13.50	12.50	1.44	1.00	10.62	$\frac{7}{8}$	14
24.31	9.81	34.81	7.81	...	14.75	12.50	1.44	1.12	10.62	$\frac{7}{8}$	16
26.81	10.31	37.81	8.31	...	16.25	15.00	1.62	1.12	13.00	1	18
29.38	10.88	40.88	8.88	...	17.88	15.00	1.62	1.25	13.00	1	20
34.44	12.44	47.94	10.44	...	20.75	17.50	1.88	1.25	15.25	$1\frac{1}{8}$	24

GENERAL NOTES:

(a) Dimensions of Table F12 are in inches.
(b) For tolerances, see para. 7.
(c) For facings, see para. 6.4.
(d) For flange bolt holes, see para. 6.5 and Table F10.
(e) For spot facing, see para. 6.6.
(f) For intersecting centerlines, center-to-contact surface, and center-to-end dimensions of side outlet fittings, see para. 6.2.4.
(g) For center-to-contact surface and center-to-end dimensions of special degree elbows, see para. 6.2.5.
(h) For reinforcement of certain fittings, see para. 6.1.1.
(i) For drains, see para. 6.12.

NOTES:

(1) These fittings may be supplied with a flat face flange. The flat face may be either the full t_f dimension thickness plus 0.06 in. or the t_f dimension thickness without the raised face height. See para. 6.3.2 for additional restrictions.
(2) The thickness of flange dimension illustrated is for regularly furnished 0.06 in. raised face (except lapped); for thickness requirements of other facings, see Fig. F7.
(3) For center-to-contact surface and center-to-end dimensioins of reducing fittings, see para. 6.2.3.
(4) For contact surface-to-contact surface and end-to-end dimensions of reducers and eccentric reducers, see para. 6.2.3.
(5) These dimensions apply to straight sizes only. See paras. 6.2.3 and 6.4.2.2. For center-to-end dimensions of reducing fittings or end-to-end dimensions of reducers, use center-to-contact surface or contact surface-to-contact surface dimensions of 0.06 in. raised face (flange edge) for largest opening and add the proper height to provide for ring joint groove applying to each flange. See Table F5 for ring joint facing dimensions.
(6) The base dimensions apply to all straight and reducing sizes.
(7) The reducing fittings, the size, and center-to-face dimension of base are determined by the size of the largest opening of fittings. In the case of reducing base elbows, orders shall specify whether the base shall be opposite the larger or smaller opening.
(8) Bases shall be plain faced unless otherwise specified, and the center-to-base dimension *R* shall be the finished dimension.
(9) Bases may be cast integral or attached as weldments at the option of the manufacturer.
(10) The bolt hole template for round base is the same as for Class 300 flanges (Table 11) of corresponding outside diameter, except using only four holes in all cases so placed as to straddle centerlines. The bases of these fittings are intended for support in compression and are not for anchors or supports in tension or shear.
(11) The thickness of flange minimum dimensions for loose flanges, Table 9, size NPS $3\frac{1}{2}$ and smaller are slightly heavier than for flanges on these fittings which are reinforced by being cast integral with the body of fitting.

Not for Resale

CLASS 400 PIPE FLANGES

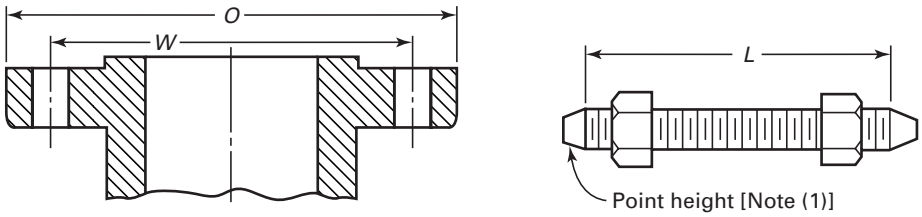

Flange Stud Bolt With Nuts

Table F13 Templates for Drilling Class 400 Flanges

1	2	3	4	5	6	7	8	9
		Drilling [Notes (2), (3)]				Length of Bolts, *L* [Notes (1), (4)]		
Nominal Pipe Size	Outside Diameter of Flange, *O*	Diameter of Bolt Circle, *W*	Diameter of Bolt Holes	Number of Bolts	Diameter of Bolts	Raised Face 0.25 in.	Male and Female/ Tongue and Groove	Ring Joint
1/2 3/4 1 1 1/4 1 1/2 2 2 1/2 3 3 1/2	Use Class 600 dimensions in these sizes.							
4	10.00	7.88	1	8	7/8	5.50	5.25	5.50
5	11.00	9.25	1	8	7/8	5.75	5.25	5.75
6	12.50	10.62	1	12	7/8	6.00	5.75	6.00
8	15.00	13.00	1 1/8	12	1	6.75	6.50	6.75
10	17.50	15.25	1 1/4	16	1 1/8	7.50	7.25	7.50
12	20.50	17.75	1 3/8	16	1 1/4	8.00	7.75	8.00
14	23.00	20.25	1 3/8	20	1 1/4	8.25	8.00	8.25
16	25.50	22.50	1 1/2	20	1 3/8	8.75	8.50	8.75
18	28.00	24.75	1 1/2	24	1 3/8	9.00	8.75	9.00
20	30.50	27.00	1 5/8	24	1 1/2	9.50	9.25	9.75
24	36.00	32.00	1 7/8	24	1 3/4	10.50	10.25	11.00

GENERAL NOTES:
(a) Dimensions are in inches.
(b) For other dimensions see Table F14.

NOTES:
(1) Length of stud bolt does not include the height of the points. See para. 6.10.2.
(2) For flange bolt holes see para. 6.5.
(3) For spot facing, see para. 6.6.
(4) Bolt lengths not shown in table may be determined in accordance with Annex D. See para. 6.10.2.

Copyright ASME International
Provided by IHS under license with ASME
No reproduction or networking permitted without license from IHS Not for Resale

Copyright ASME International
Provided by IHS under license with ASME
No reproduction or networking permitted without license from IHS

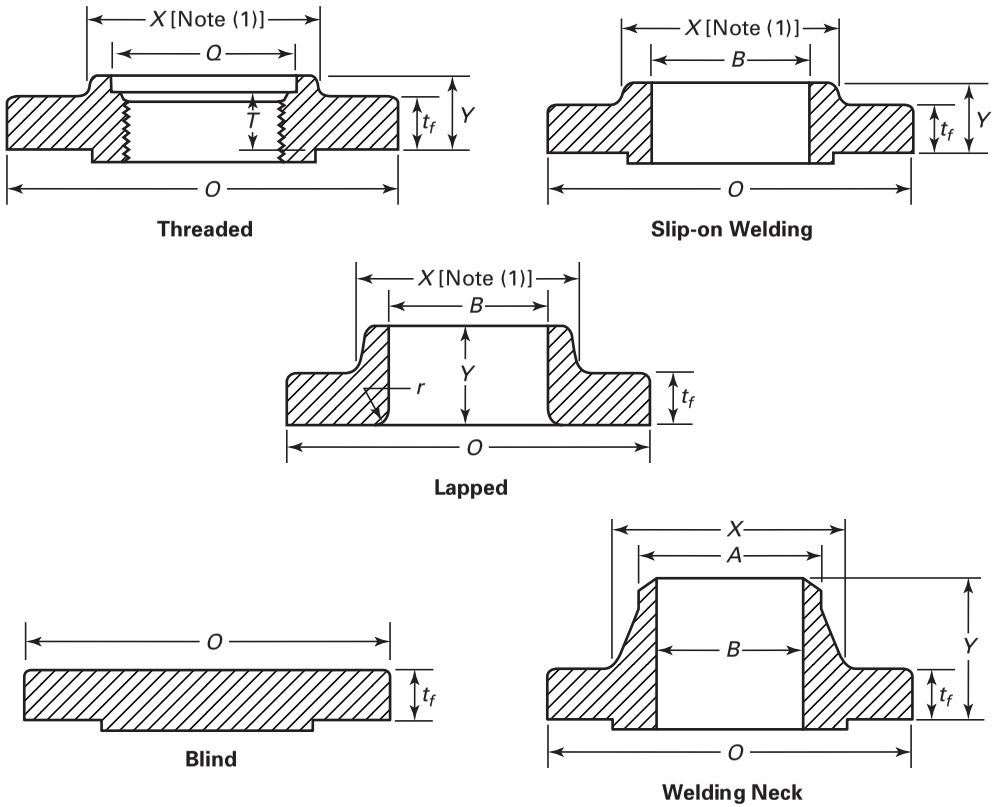

Table F14 Dimensions of Class 400 Flanges

1	2	3	4	5	6	7	8	9	10	11	12	13	14
					Length Through Hub				Bore				
Nominal Pipe Size	Outside Diameter of Flange, *O*	Thickness of Flange Min., t_f	Diameter of Hub, *X*	Hub Diameter Beginning of Chamfer Welding Neck, *A* [Note (2)]	Threaded Slip-on, *Y*	Lapped, *Y*	Welding Neck, *Y*	Thread Length Threaded Flange Min., *T* [Note (3)]	Slip-on Min., *B*	Lapped Min., *B*	Welding Neck, *B*	Corner Radius of Bore of Lapped Flange and Pipe, *r*	Counter-bore Threaded Flange Min., *Q*
1/2													
3/4													
1					Use Class 600 dimensions in these sizes [Note (4)].								
1 1/4													
1 1/2													

Not for Resale

Copyright ASME International
Provided by IHS under license with ASME
No reproduction or networking permitted without license from IHS

Table F14 Dimensions of Class 400 Flanges (Cont'd)

1	2	3	4	5	6	7	8	9	10	11	12	13	14
					Length Through Hub				Bore				
Nominal Pipe Size	Outside Diameter of Flange, *O*	Thickness of Flange Min., t_f	Diameter of Hub, *X*	Hub Diameter Beginning of Chamfer Welding Neck, *A* [Note (2)]	Threaded Slip-on, *Y*	Lapped, *Y*	Welding Neck, *Y*	Thread Length Threaded Flange Min., *T* [Note (3)]	Slip-on Min., *B*	Lapped Min., *B*	Welding Neck, *B*	Corner Radius of Bore of Lapped Flange and Pipe, *r*	Counter-bore Threaded Flange Min., *Q*
2 2½ 3 3½	Use Class 600 dimensions in these sizes [Note (4)].												
4	10.00	1.38	5.75	4.50	2.00	2.00	3.50	1.44	4.57	4.60	To be	0.44	4.63
5	11.00	1.50	7.00	5.56	2.12	2.12	4.00	1.69	5.66	5.69	specified	0.44	5.69
6	12.50	1.62	8.12	6.63	2.25	2.25	4.06	1.81	6.72	6.75	by	0.50	6.75
8	15.00	1.88	10.25	8.63	2.69	2.69	4.62	2.00	8.72	8.75	Purchaser	0.50	8.75
10	17.50	2.12	12.62	10.75	2.88	4.00	4.88	2.19	10.88	10.92		0.50	10.88
12	20.50	2.25	14.75	12.75	3.12	4.25	5.38	2.38	12.88	12.92		0.50	12.94
14	23.00	2.38	16.75	14.00	3.31	4.62	5.88	2.50	14.14	14.18		0.50	14.19
16	25.50	2.50	19.00	16.00	3.69	5.00	6.00	2.69	16.16	16.19		0.50	16.19
18	28.00	2.62	21.00	18.00	3.88	5.38	6.50	2.75	18.18	18.20		0.50	18.19
20	30.50	2.75	23.12	20.00	4.00	5.75	6.62	2.88	20.20	20.25		0.50	20.19
24	36.00	3.00	27.62	24.00	4.50	6.25	6.88	3.25	24.25	24.25		0.50	24.19

GENERAL NOTES:

(a) Dimensions are in inches.
(b) For tolerances, see para. 7.
(c) For facings, see para. 6.4.
(d) For flange bolt holes, see para. 6.5 and Table F13.
(e) For spot facing, see para. 6.6.
(f) For reducing threaded and slip-on flanges, see Table F6.
(g) Blind flanges may be made with or without hubs at the manufacturer's option.
(h) For reducing welding neck flanges, see para. 6.8.

NOTES:

(1) This dimension is for large end of hub, which may be straight or tapered. Taper shall not exceed 7 deg on threaded, slip-on, and lapped flanges.
(2) For welding end bevel, see para. 6.7.
(3) For thread in threaded flanges, see para. 6.9.
(4) Socket welding flanges may be provided in NPS ½ through 2½ using Class 600 dimensions.

Not for Resale

CLASS 600 PIPE FLANGES AND FLANGED FITTINGS

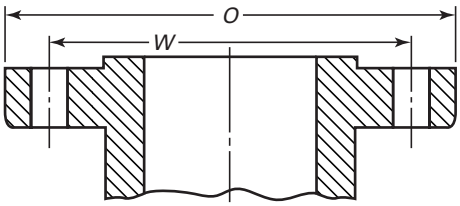

Flange

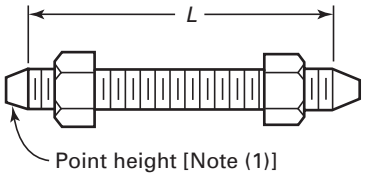

Stud Bolt With Nuts

Table F15 Templates for Drilling Class 600 Flanges

1	2	3	4	5	6	7	8	9
		Drilling [Notes (2), (3)]				Length of Bolts, *L* [Notes (1), (4)]		
Nominal Pipe Size	Outside Diameter of Flange, *O*	Diameter of Bolt Circle, *W*	Diameter of Bolt Holes	Number of Bolts	Diameter of Bolts	Raised Face 0.25 in.	Male and Female/ Tongue and Groove	Ring Joint
1/2	3.75	2.62	5/8	4	1/2	3.00	2.75	3.00
3/4	4.62	3.25	3/4	4	5/8	3.50	3.25	3.50
1	4.88	3.50	3/4	4	5/8	3.50	3.25	3.50
1 1/4	5.25	3.88	3/4	4	5/8	3.75	3.50	3.75
1 1/2	6.12	4.50	7/8	4	3/4	4.25	4.00	4.25
2	6.50	5.00	3/4	8	5/8	4.25	4.00	4.25
2 1/2	7.50	5.88	7/8	8	3/4	4.75	4.50	4.75
3	8.25	6.62	7/8	8	3/4	5.00	4.75	5.00
3 1/2	9.00	7.25	1	8	7/8	5.50	5.25	5.50
4	10.75	8.50	1	8	7/8	5.75	5.50	5.75
5	13.00	10.50	1 1/8	8	1	6.50	6.25	6.50
6	14.00	11.50	1 1/8	12	1	6.75	6.50	6.75
8	16.50	13.75	1 1/4	12	1 1/8	7.50	7.25	7.75
10	20.00	17.00	1 3/8	16	1 1/4	8.50	8.25	8.50
12	22.00	19.25	1 3/8	20	1 1/4	8.75	8.50	8.75
14	23.75	20.75	1 1/2	20	1 3/8	9.25	9.00	9.25
16	27.00	23.75	1 5/8	20	1 1/2	10.00	9.75	10.00
18	29.25	25.75	1 3/4	20	1 5/8	10.75	10.50	10.75
20	32.00	28.50	1 3/4	24	1 5/8	11.25	11.00	11.50
24	37.00	33.00	2	24	1 7/8	13.00	12.75	13.25

GENERAL NOTES:

(a) Dimensions are in inches.

(b) For other dimensions, see Table F16.

NOTES:

(1) Length of stud bolt does not include the height of the points. See para. 6.10.2.

(2) For flange bolt hole, see para. 6.5.

(3) For spot facing, see para. 6.6.

(4) Bolt lengths not shown in table may be determined in accordance with Annex D. See para. 6.10.2.

Copyright ASME International
Provided by IHS under license with ASME
No reproduction or networking permitted without license from IHS
Not for Resale

Copyright ASME International
Provided by IHS under license with ASME
No reproduction or networking permitted without license from IHS

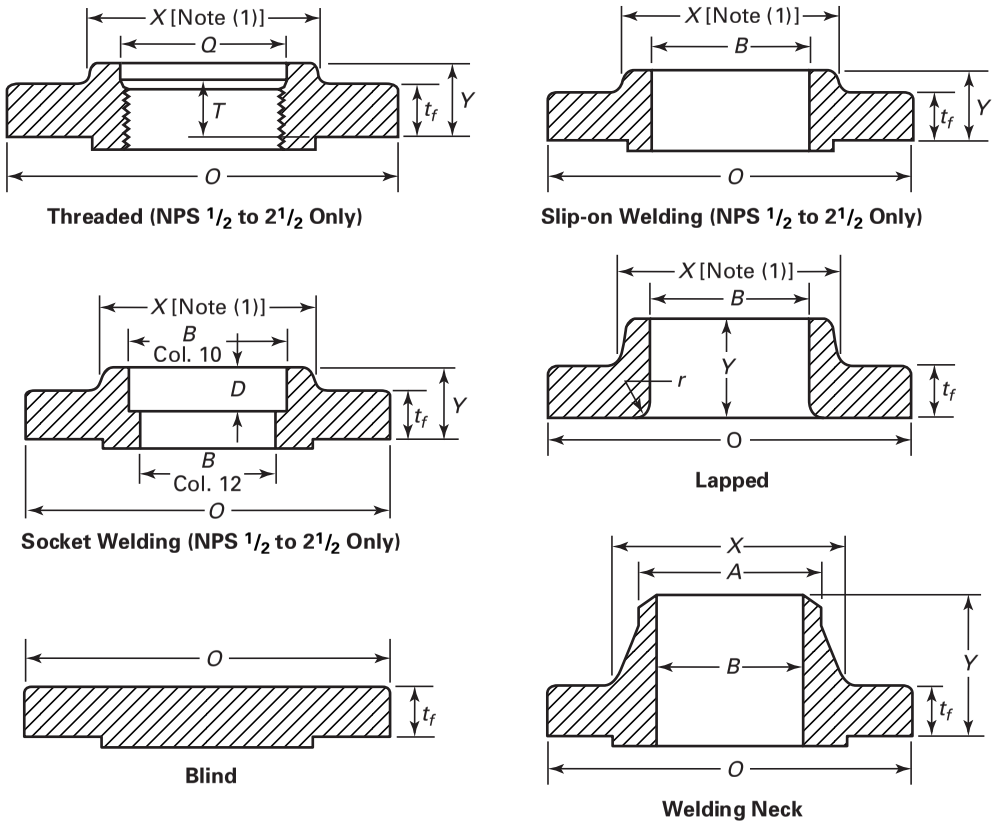

Table F16 Dimensions of Class 600 Flanges

1	2	3	4	5	6	7	8	9	10	11	12	13	14	15
				Hub Diameter Beginning of Chamfer Welding Neck, *A* [Note (2)]	Length Through Hub			Thread Length Threaded Flange Min., *T* [Note (3)]	Bore			Corner Radius of Bore of Lapped Flange and Pipe, *r*	Counter-bore Threaded Flange Min., *Q*	Depth of Socket, *D*
Nominal Pipe Size	Outside Diameter of Flange, *O*	Thickness of Flange Min., t_f	Diameter of Hub, *X*		Threaded Slip-on Socket Welding, *Y*	Lapped, *Y*	Welding Neck, *Y*		Slip-on Socket Welding Min., *B*	Lapped Min., *B*	Welding Neck/ Socket Welding, *B*			
1/2	3.75	0.56	1.50	0.84	0.88	0.88	2.06	0.62	0.88	0.90	To be	0.12	0.93	0.38
3/4	4.62	0.62	1.88	1.05	1.00	1.00	2.25	0.62	1.09	1.11	specified	0.12	1.14	0.44
1	4.88	0.69	2.12	1.32	1.06	1.06	2.44	0.69	1.36	1.38	by	0.12	1.41	0.50
1 1/4	5.25	0.81	2.50	1.66	1.12	1.12	2.62	0.81	1.70	1.72	Purchaser	0.19	1.75	0.56
1 1/2	6.12	0.88	2.75	1.90	1.25	1.25	2.75	0.88	1.95	1.97		0.25	1.99	0.62

Not for Resale

Copyright ASME International
Provided by IHS under license with ASME
No reproduction or networking permitted without license from IHS

Table F16 Dimensions of Class 600 Flanges (Cont'd)

1	2	3	4	5	6	7	8	9	10	11	12	13	14	15
				Hub Diameter Beginning of Chamfer Welding Neck, *A* [Note (2)]	Length Through Hub			Thread Length Threaded Flange Min., *T* [Note (3)]	Bore			Corner Radius of Bore of Lapped Flange and Pipe, *r*	Counter-bore Threaded Flange Min., *Q*	Depth of Socket, *D*
Nominal Pipe Size	Outside Diameter of Flange, *O*	Thickness of Flange Min., t_f	Diameter of Hub, *X*		Threaded Slip-on Socket Welding, *Y*	Lapped, *Y*	Welding Neck, *Y*		Slip-on Socket Welding Min., *B*	Lapped Min., *B*	Welding Neck/ Socket Welding, *B*			
2	6.50	1.00	3.31	2.38	1.44	1.44	2.88	1.12	2.44	2.46		0.31	2.50	0.69
2½	7.50	1.12	3.94	2.88	1.62	1.62	3.12	1.25	2.94	2.97		0.31	3.00	0.75
3	8.25	1.25	4.62	3.50	1.81	1.81	3.25	1.38	3.57	3.60		0.38	3.63	0.81
3½	9.00	1.38	5.25	4.00	1.94	1.94	3.38	1.56	4.07	4.10		0.38	4.13	. . .
4	10.75	1.50	6.00	4.50	2.12	2.12	4.00	1.62	4.57	4.60		0.44	4.63	. . .
5	13.00	1.75	7.44	5.56	2.38	2.38	4.50	1.88	5.66	5.69		0.44	5.69	. . .
6	14.00	1.88	8.75	6.63	2.62	2.62	4.62	2.00	6.72	6.75		0.50	6.75	. . .
8	16.50	2.19	10.75	8.63	3.00	3.00	5.25	2.25	8.72	8.75		0.50	8.75	. . .
10	20.00	2.50	13.50	10.75	3.38	4.38	6.00	2.56	10.88	10.92		0.50	10.88	. . .
12	22.00	2.62	15.75	12.75	3.62	4.62	6.12	2.75	12.88	12.92		0.50	12.94	. . .
14	23.75	2.75	17.00	14.00	3.69	5.00	6.50	2.88	14.14	14.18		0.50	14.19	. . .
16	27.00	3.00	19.50	16.00	4.19	5.50	7.00	3.06	16.16	16.19		0.50	16.19	. . .
18	29.25	3.25	21.50	18.00	4.62	6.00	7.25	3.12	18.18	18.20		0.50	18.19	. . .
20	32.00	3.50	24.00	20.00	5.00	6.50	7.50	3.25	20.20	20.25		0.50	20.19	. . .
24	37.00	4.00	28.25	24.00	5.50	7.25	8.00	3.62	24.25	24.25		0.50	24.19	. . .

GENERAL NOTES:

(a) Dimensions are in inches.
(b) For tolerances, see para. 7.
(c) For facings, see para. 6.4.
(d) For flange bolt holes, see para. 6.5 and Table F15.
(e) For spot facing, see para. 6.6.
(f) For reducing threaded and slip-on flanges, see Table F6.
(g) Blind flanges may be made with or without hubs at the manufacturer's option.
(h) For reducing welding neck flanges, see para. 6.8.

NOTES:

(1) This dimension is for large end of hub, which may be straight or tapered. Taper shall not exceed 7 deg on threaded, slip-on, socket-welding, and lapped flanges.
(2) For welding end bevel, see para. 6.7.
(3) For threads in threaded flanges, see para. 6.9.

Not for Resale

CLASS 900 PIPE FLANGES AND FLANGED FITTINGS

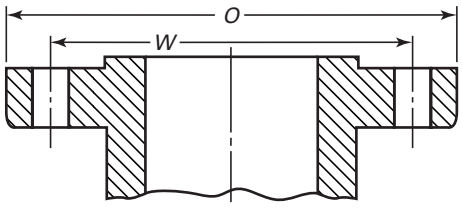

Flange

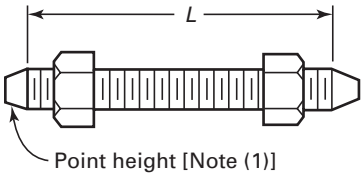

Stud Bolt With Nuts

Table F17 Templates for Drilling Class 900 Flanges

1	2	3	4	5	6	7	8	9
		Drilling [Notes (2), (3)]				Length of Bolts, *L* [Notes (1), (4)]		
Nominal Pipe Size	Outside Diameter of Flange, *O*	Diameter of Bolt Circle, *W*	Diameter of Bolt Holes	Number of Bolts	Diameter of Bolts	Raised Face 0.25 in.	Male and Female/ Tongue and Groove	Ring Joint
1/2 3/4 1 1 1/4 1 1/2 2 2 1/2	Use Class 1500 dimensions in these sizes.							
3	9.50	7.50	1	8	7/8	5.75	5.50	5.75
4	11.50	9.25	1 1/4	8	1 1/8	6.75	6.50	6.75
5	13.75	11.00	1 3/8	8	1 1/4	7.50	7.25	7.50
6	15.00	12.50	1 1/4	12	1 1/8	7.50	7.25	7.75
8	18.50	15.50	1 1/2	12	1 3/8	8.75	8.50	8.75
10	21.50	18.50	1 1/2	16	1 3/8	9.25	9.00	9.25
12	24.00	21.00	1 1/2	20	1 3/8	10.00	9.75	10.00
14	25.25	22.00	1 5/8	20	1 1/2	10.75	10.50	11.00
16	27.75	24.25	1 3/4	20	1 5/8	11.25	11.00	11.50
18	31.00	27.00	2	20	1 7/8	12.75	12.50	13.25
20	33.75	29.50	2 1/8	20	2	13.75	13.50	14.25
24	41.00	35.50	2 5/8	20	2 1/2	17.25	17.00	18.00

GENERAL NOTES:

(a) Dimensions are in inches.

(b) For other dimensions, see Table F18 and F19.

NOTES:

(1) Length of stud bolt does not include the height of the points. See para. 6.10.2.

(2) For flange bolt holes, see para. 6.5.

(3) For spot facing, see para. 6.6.

(4) Bolt lengths not shown in table may be determined in accordance with Annex D. See para. 6.10.2.

Copyright ASME International
Provided by IHS under license with ASME
No reproduction or networking permitted without license from IHS
Not for Resale

Copyright ASME International
Provided by IHS under license with ASME
No reproduction or networking permitted without license from IHS

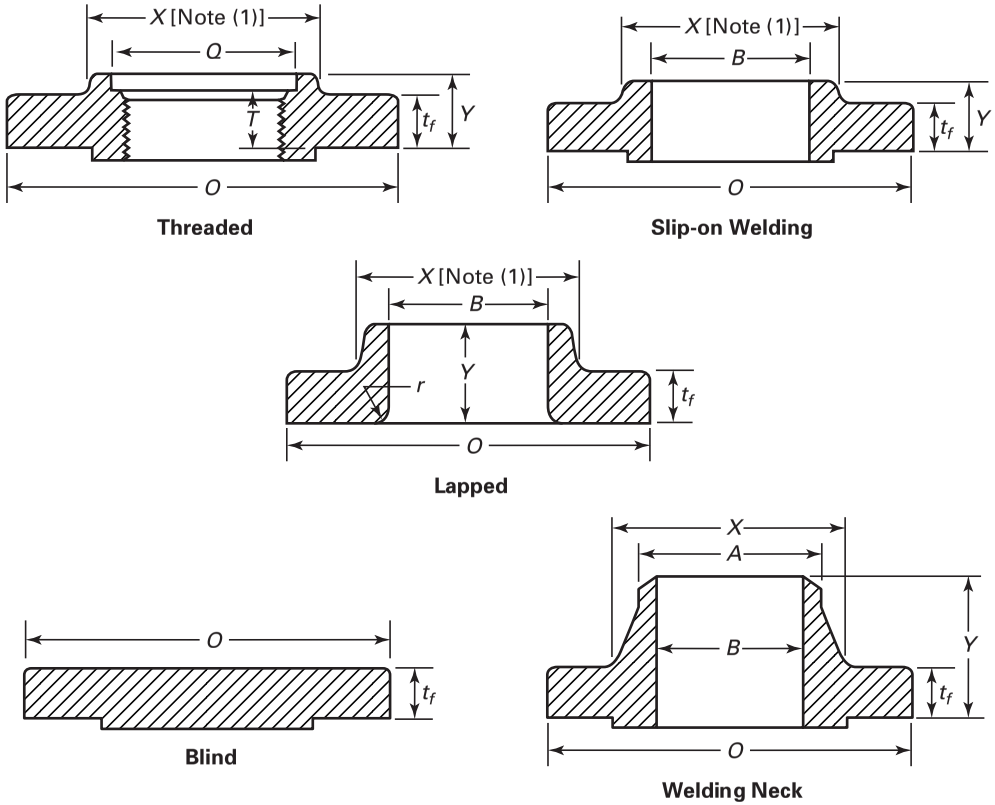

Table F18 Dimensions of Class 900 Flanges

1	2	3	4	5	6	7	8	9	10	11	12	13	14
					Length Through Hub				Bore				
Nominal Pipe Size	Outside Diameter of Flange, *O*	Thickness of Flange Min., t_f	Diameter of Hub, *X*	Hub Diameter Beginning of Chamfer Welding Neck, *A* [Note (2)]	Threaded Slip-on, *Y*	Lapped, *Y*	Welding Neck, *Y*	Thread Length Threaded Flange Min., *T* [Note (3)]	Slip-on Min., *B*	Lapped Min., *B*	Welding Neck, *B*	Corner Radius of Bore of Lapped Flange and Pipe, *r*	Counterbore Threaded Flange Min., *Q*
½													
¾													
1													
1¼					Use Class 1500 dimensions in these sizes [Note (4)].								
1½													
2													
2½													

Not for Resale

Copyright ASME International
Provided by IHS under license with ASME
No reproduction or networking permitted without license from IHS

Table F18 Dimensions of Class 900 Flanges (Cont'd)

1	2	3	4	5	6	7	8	9	10	11	12	13	14
					Length Through Hub				Bore				
Nominal Pipe Size	Outside Diameter of Flange, *O*	Thickness of Flange Min., t_f	Diameter of Hub, *X*	Hub Diameter Beginning of Chamfer Welding Neck, *A* [Note (2)]	Threaded Slip-on, *Y*	Lapped, *Y*	Welding Neck, *Y*	Thread Length Threaded Flange Min., *T* [Note (3)]	Slip-on Min., *B*	Lapped Min., *B*	Welding Neck, *B*	Corner Radius of Bore of Lapped Flange and Pipe, *r*	Counterbore Threaded Flange Min., *Q*
3	9.50	1.50	5.00	3.50	2.12	2.12	4.00	1.62	3.57	3.60	To be	0.38	3.63
4	11.50	1.75	6.25	4.50	2.75	2.75	4.50	1.88	4.57	4.60	specified by	0.44	4.63
5	13.75	2.00	7.50	5.56	3.12	3.12	5.00	2.12	5.66	5.69	Purchaser	0.44	5.69
6	15.00	2.19	9.25	6.63	3.38	3.38	5.50	2.25	6.72	6.75		0.50	6.75
8	18.50	2.50	11.75	8.63	4.00	4.50	6.38	2.50	8.72	8.75		0.50	8.75
10	21.50	2.75	14.50	10.75	4.25	5.00	7.25	2.81	10.88	10.92		0.50	10.88
12	24.00	3.12	16.50	12.75	4.62	5.62	7.88	3.00	12.88	12.92		0.50	12.94
14	25.25	3.38	17.75	14.00	5.12	6.12	8.38	3.25	14.14	14.18		0.50	14.19
16	27.75	3.50	20.00	16.00	5.25	6.50	8.50	3.38	16.16	16.19		0.50	16.19
18	31.00	4.00	22.25	18.00	6.00	7.50	9.00	3.50	18.18	18.20		0.50	18.19
20	33.75	4.25	24.50	20.00	6.25	8.25	9.75	3.62	20.20	20.25		0.50	20.19
24	41.00	5.50	29.50	24.00	8.00	10.50	11.50	4.00	24.25	24.25		0.50	24.19

GENERAL NOTES:

(a) Dimensions are in inches.
(b) For tolerances, see para. 7.
(c) For facings, see para. 6.4.
(d) For flange bolt holes, see para. 6.5 and Table F17.
(e) For spot facing, see para. 6.6.
(f) For reducing threaded and slip-on flanges, see Table F6.
(g) Blind flanges may be made with or without hubs at the manufacturer's option.
(h) For reducing welding neck flanges, see para. 6.8.

NOTES:

(1) This dimension is for large end of hub, which may be straight or tapered. Taper shall not exceed 7 deg on threaded, slip-on, socket-welding, and lapped flanges.
(2) For welding end bevel, see para. 6.7.
(3) For threads in threaded flanges, see para. 6.9.
(4) Socket welding flanges may be provided in NPS $\frac{1}{2}$ through $2\frac{1}{2}$ using Class 1500 dimensions.

Not for Resale

CLASS 1500 PIPE FLANGES

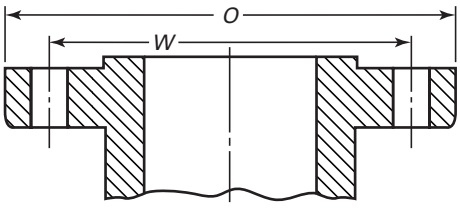

Flange

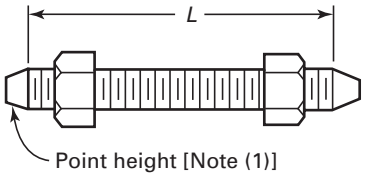

Stud Bolt With Nuts

Table F19 Templates for Drilling Class 1500 Flanges

1	2	3	4	5	6	7	8	9
		Drilling [Notes (2), (3)]				Length of Bolts, *L* [Notes (1), (4)]		
Nominal Pipe Size	Outside Diameter of Flange, *O*	Diameter of Bolt Circle, *W*	Diameter of Bolt Holes	Number of Bolts	Diameter of Bolts	Raised Face 0.25 in.	Male and Female/ Tongue and Groove	Ring Joint
1/2	4.75	3.25	7/8	4	3/4	4.25	4.00	4.25
3/4	5.12	3.50	7/8	4	3/4	4.50	4.25	4.50
1	5.88	4.00	1	4	7/8	5.00	4.75	5.00
1 1/4	6.25	4.38	1	4	7/8	5.00	4.75	5.00
1 1/2	7.00	4.88	1 1/8	4	1	5.50	5.25	5.50
2	8.50	6.50	1	8	7/8	5.75	5.50	5.75
2 1/2	9.62	7.50	1 1/8	8	1	6.25	6.00	6.25
3	10.50	8.00	1 1/4	8	1 1/8	7.00	6.75	7.00
4	12.25	9.50	1 3/8	8	1 1/4	7.75	7.50	7.75
5	14.75	11.50	1 5/8	8	1 1/2	9.75	9.50	9.75
6	15.50	12.50	1 1/2	12	1 3/8	10.25	10.00	10.50
8	19.00	15.50	1 3/4	12	1 5/8	11.50	11.25	12.75
10	23.00	19.00	2	12	1 7/8	13.25	13.00	13.50
12	26.50	22.50	2 1/8	16	2	14.75	14.50	15.25
14	29.50	25.00	2 3/8	16	2 1/4	16.00	15.75	16.75
16	32.50	27.75	2 5/8	16	2 1/2	17.50	17.25	18.50
18	36.00	30.50	2 7/8	16	2 3/4	19.50	19.25	20.75
20	38.75	32.75	3 1/8	16	3	21.25	21.00	22.25
24	46.00	39.00	3 5/8	16	3 1/2	24.25	24.00	25.50

GENERAL NOTES:

(a) Dimensions are in inches.

(b) For other dimensions, see Table F20.

NOTES:

(1) Length of stud bolt does not include the height of the points. See para. 6.10.2.

(2) For flange bolt holes, see para. 6.5.

(3) For spot facing, see para. 6.6.

(4) Bolt lengths not shown in Table determined in accordance with Annex D. See para. 6.10.2.

Copyright ASME International
Provided by IHS under license with ASME
No reproduction or networking permitted without license from IHS
Not for Resale

Copyright ASME International
Provided by IHS under license with ASME
No reproduction or networking permitted without license from IHS

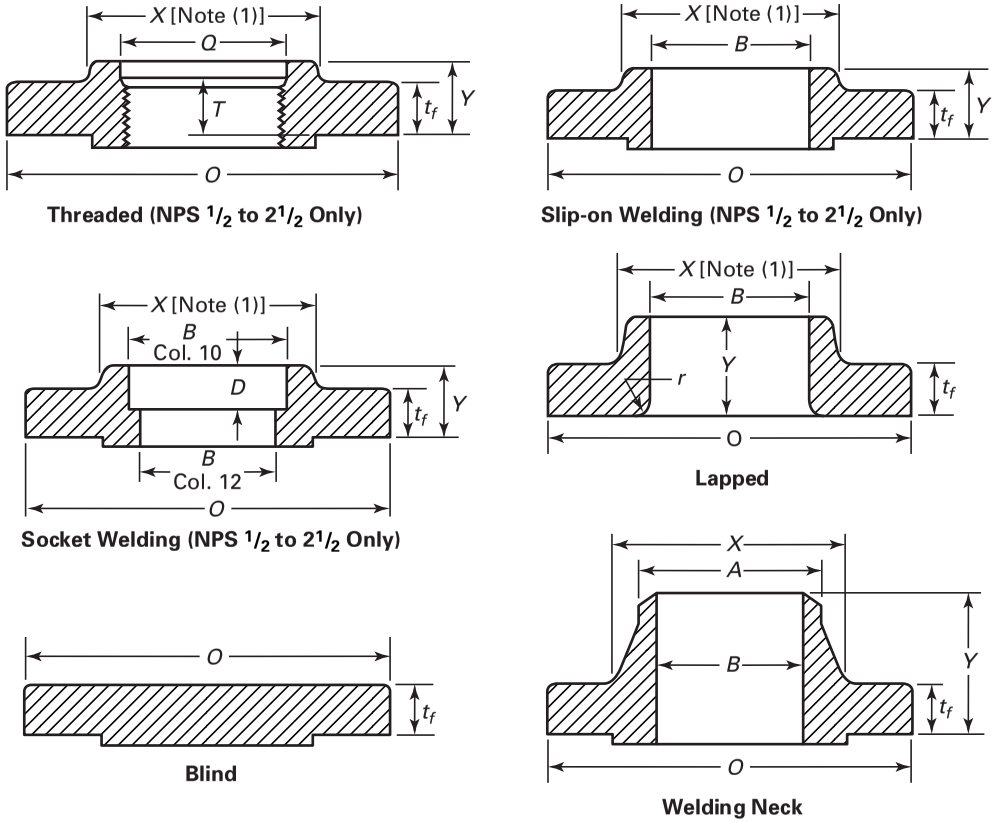

Table F20 Dimensions of Class 1500 Flanges

1	2	3	4	5	6	7	8	9	10	11	12	13	14	15
					Length Through Hub				Bore					
Nominal Pipe Size	Outside Diameter of Flange, *O*	Thickness of Flange Min., t_f	Diameter of Hub, *X*	Hub Diameter Beginning of Chamfer Welding Neck, *A* [Note (2)]	Threaded Slip-on Socket Welding, *Y*	Lapped *Y*	Welding Neck, *Y*	Thread Length Threaded Flange Min., *T* [Note (3)]	Slip-on Socket Welding, Min. *B*	Lapped Min., *B*	Welding Neck/ Socket Welding, *B*	Corner Radius of Bore of Lapped Flange and Pipe, *r*	Counterbore Threaded Flange Min., *Q*	Depth of Socket, *D*
1/2	4.75	0.88	1.50	0.84	1.25	1.25	2.38	0.88	0.88	0.90	To be	0.12	0.93	0.38
3/4	5.12	1.00	1.75	1.05	1.38	1.38	2.75	1.00	1.09	1.11	specified	0.12	1.14	0.44
1	5.88	1.12	2.06	1.32	1.62	1.62	2.88	1.12	1.36	1.38	by	0.12	1.41	0.50
1 1/4	6.25	1.12	2.50	1.66	1.62	1.62	2.88	1.19	1.70	1.72	Purchaser	0.19	1.75	0.56

Not for Resale

Copyright ASME International
Provided by IHS under license with ASME
No reproduction or networking permitted without license from IHS

Table F20 Dimensions of Class 1500 Flanges (Cont'd)

1	2	3	4	5	6	7	8	9	10	11	12	13	14	15
					Length Through Hub				Bore					
Nominal Pipe Size	Outside Diameter of Flange, *O*	Thickness of Flange Min., t_f	Diameter of Hub, *X*	Hub Diameter Beginning of Chamfer Welding Neck, *A* [Note (2)]	Threaded Slip-on Socket Welding, *Y*	Lapped *Y*	Welding Neck, *Y*	Thread Length Threaded Flange Min., *T* [Note (3)]	Slip-on Socket Welding, Min. *B*	Lapped Min., *B*	Welding Neck/ Socket Welding, *B*	Corner Radius of Bore of Lapped Flange and Pipe, *r*	Counterbore Threaded Flange Min., *Q*	Depth of Socket, *D*
1½	7.00	1.25	2.75	1.90	1.75	1.75	3.25	1.25	1.95	1.97		0.25	1.99	0.62
2	8.50	1.50	4.12	2.38	2.25	2.25	4.00	1.50	2.44	2.46		0.31	2.50	0.69
2½	9.62	1.62	4.88	2.88	2.50	2.50	4.12	1.88	2.94	2.97		0.31	3.00	0.75
3	10.50	1.88	5.25	3.50	...	2.88	4.62	...	...	3.60		0.38	...	...
4	12.25	2.12	6.38	4.50	...	3.56	4.88	...	...	4.60		0.44	...	...
5	14.75	2.88	7.75	5.56	...	4.12	6.12	...	...	5.69		0.44	...	...
6	15.50	3.25	9.00	6.63	...	4.69	6.75	...	...	6.75		0.50	...	...
8	19.00	3.62	11.50	8.63	...	5.62	8.38	...	...	8.75		0.50	...	...
10	23.00	4.25	14.50	10.75	...	7.00	10.00	...	...	10.92		0.50	...	...
12	26.50	4.88	17.75	12.75	...	8.62	11.12	...	...	12.92		0.50	...	...
14	29.50	5.25	19.50	14.00	...	9.50	11.75	...	...	14.18		0.50	...	...
16	32.50	5.75	21.75	16.00	...	10.25	12.25	...	...	16.19		0.50	...	...
18	36.00	6.38	23.50	18.00	...	10.88	12.88	...	...	18.20		0.50	...	...
20	38.75	7.00	25.25	20.00	...	11.50	14.00	...	...	20.25		0.50	...	...
24	46.00	8.00	30.00	24.00	...	13.00	16.00	...	...	24.25		0.50	...	...

GENERAL NOTES:

(a) Dimensions are in inches.
(b) For tolerances, see para. 7.
(c) For facings, see para. 6.4.
(d) For flange bolt holes, see para. 6.5 and Table F19.
(e) For spot facing, see para. 6.6.
(f) For reducing threaded and slip-on flanges, see Table F6.
(g) Blind flanges may be made with or without hubs at the manufacturer's option.
(h) For reducing welding neck flanges, see para. 6.8.

NOTES:

(1) This dimension is for large end of hub, which may be straight or tapered. Taper shall not exceed 7 deg on threaded, slip-on, socket-welding, and lapped flanges.
(2) For welding end bevel, see para. 6.7.
(3) For threads in threaded flanges, see para. 6.9.

Not for Resale

CLASS 2500 PIPE FLANGES

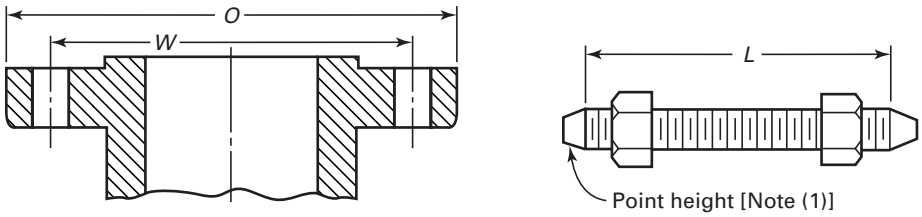

Flange Stud Bolt With Nuts

Table F21 Templates for Drilling Class 2500 Flanges

1	2	3	4	5	6	7	8	9
		Drilling [Notes (2), (3)]				Length of Bolts, *L* [Notes (1), (4)]		
Nominal Pipe Size	Outside Diameter of Flange, *O*	Diameter of Bolt Circle, *W*	Diameter of Bolt Holes	Number of Bolts	Diameter of Bolts	Raised Face 0.25 in.	Male and Female/ Tongue and Groove	Ring Joint
1/2	5.25	3.50	7/8	4	3/4	4.75	4.50	4.75
3/4	5.50	3.75	7/8	4	3/4	5.00	4.75	5.00
1	6.25	4.25	1	4	7/8	5.50	5.25	5.50
1 1/4	7.25	5.12	1 1/8	4	1	6.00	5.75	6.00
1 1/2	8.00	5.75	1 1/4	4	1 1/8	6.75	6.50	6.75
2	9.25	6.75	1 1/8	8	1	7.00	6.75	7.00
2 1/2	10.50	7.75	1 1/4	8	1 1/8	7.75	7.50	8.00
3	12.00	9.00	1 3/8	8	1 1/4	8.75	8.50	9.00
4	14.00	10.75	1 5/8	8	1 1/2	10.00	9.75	10.25
5	16.50	12.75	1 7/8	8	1 3/4	11.75	11.50	12.25
6	19.00	14.50	2 1/8	8	2	13.50	13.25	14.00
8	21.75	17.25	2 1/8	12	2	15.00	14.75	15.50
10	26.50	21.25	2 5/8	12	2 1/2	19.25	19.00	20.00
12	30.00	24.38	2 7/8	12	2 3/4	21.25	21.00	22.00

GENERAL NOTES:
(a) Dimensions are in inches.
(b) For other dimensions, see Table F22.

NOTES:
(1) Length of stud bolt does not include the height of the points. See para. 6.10.2.
(2) For flange bolt holes, see para. 6.5.
(3) For spot facing, see para. 6.6.
(4) Bolt lengths not shown in Table may be determined in accordance with Annex D. See para. 6.10.2.

Copyright ASME International
Provided by IHS under license with ASME
No reproduction or networking permitted without license from IHS Not for Resale

Copyright ASME International
Provided by IHS under license with ASME
No reproduction or networking permitted without license from IHS

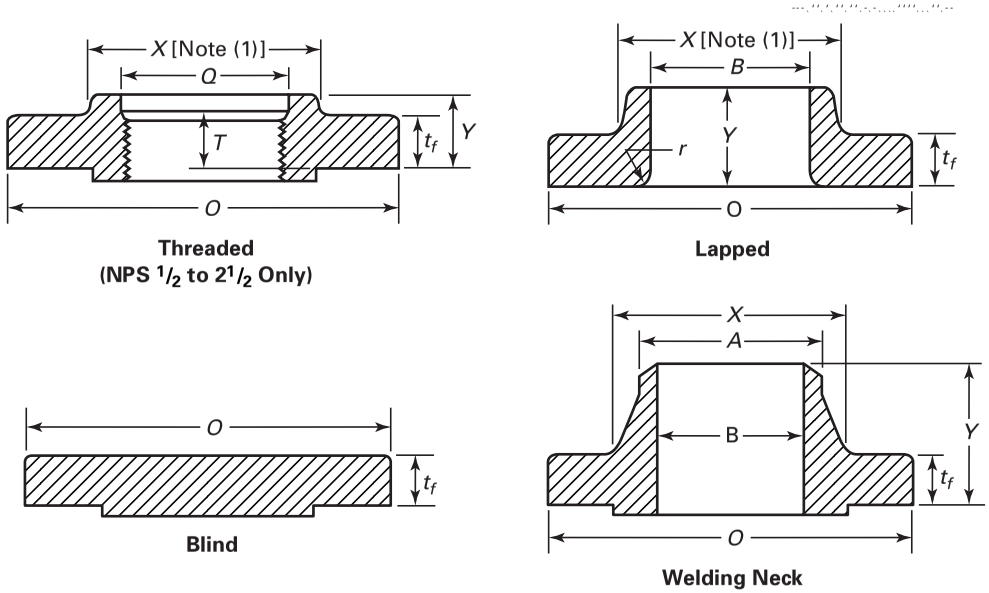

Table F22 Dimensions of Class 2500 Flanges

1	2	3	4	5	6	7	8	9	10	11	12	13
					Length Through Hub				Bore			
Nominal Pipe Size	Outside Diameter of Flange, *O*	Thickness of Flange Min., t_f	Diameter of Hub, *X*	Hub Diameter Beginning of Chamfer Welding Neck, *A* [Note (2)]	Threaded, *Y*	Lapped, *Y*	Welding Neck *Y*	Thread Length Threaded Flange Min. *T* [Note (3)]	Lapped Min., *B*	Welding Neck, *B*	Corner Radius of Bore of Lapped Flange and Pipe, *r*	Counterbore Threaded Flange Min., *Q*
1/2	5.25	1.19	1.69	0.84	1.56	1.56	2.88	1.12	0.90	To be	0.12	0.93
3/4	5.50	1.25	2.00	1.05	1.69	1.69	3.12	1.25	1.11	specified	0.12	1.14
1	6.25	1.38	2.25	1.32	1.88	1.88	3.50	1.38	1.38	by	0.12	1.41
1 1/4	7.25	1.50	2.88	1.66	2.06	2.06	3.75	1.50	1.72	Purchaser	0.19	1.75
1 1/2	8.00	1.75	3.12	1.90	2.38	2.38	4.38	1.75	1.97		0.25	1.99
2	9.25	2.00	3.75	2.38	2.75	2.75	5.00	2.00	2.46		0.31	2.50
2 1/2	10.50	2.25	4.50	2.88	3.12	3.12	5.62	2.25	2.97		0.31	3.00
3	12.00	2.62	5.25	3.50	...	3.62	6.62	...	3.60		0.38	...
4	14.00	3.00	6.50	4.50	...	4.25	7.50	...	4.60		0.44	...
5	16.50	3.62	8.00	5.56	...	5.12	9.00	...	5.69		0.44	...
6	19.00	4.25	9.25	6.63	...	6.00	10.75	...	6.75		0.50	...
8	21.75	5.00	12.00	8.63	...	7.00	12.50	...	8.75		0.50	...
10	26.50	6.50	14.75	10.75	...	9.00	16.50	...	10.92		0.50	...
12	30.00	7.25	17.38	12.75	...	10.00	18.25	...	12.92		0.50	...

Not for Resale

Notes to Table F22

GENERAL NOTES:

(a) Dimensions are in inches.
(b) For tolerances, see para. 7.
(c) For facings, see para. 6.4.
(d) For flange bolt holes, see para. 6.5 and Table F21.
(e) For spot facing, see para. 6.6.
(f) For reducing threaded and slip-on flanges, see Table F6.
(g) Blind flanges may be made with or without hubs at the manufacturer's option.
(h) For reducing welding neck flanges, see para. 6.8.

NOTES:

(1) This dimension is for large end of hub, which may be straight or tapered. Taper shall not exceed 7 deg on threaded, slip-on, socket-welding, and lapped flanges.
(2) For welding end bevel, see para. 6.7.
(3) For threads in threaded flanges, see para. 6.9.

Copyright ASME International
Provided by IHS under license with ASME
No reproduction or networking permitted without license from IHS Not for Resale

ANNEX G
DIMENSIONS OF CLASSES 400, 600, 900, 1500, AND 2500 FLANGED FITTINGS IN U.S. CUSTOMARY UNITS

This Annex is not a mandatory annex of B16.5-2003, and is placed after the main text for information.

This Annex contains Tables G1 through G5.

Copyright ASME International
Provided by IHS under license with ASME
No reproduction or networking permitted without license from IHS
Not for Resale

Copyright ASME International
Provided by IHS under license with ASME
No reproduction or networking permitted without license from IHS

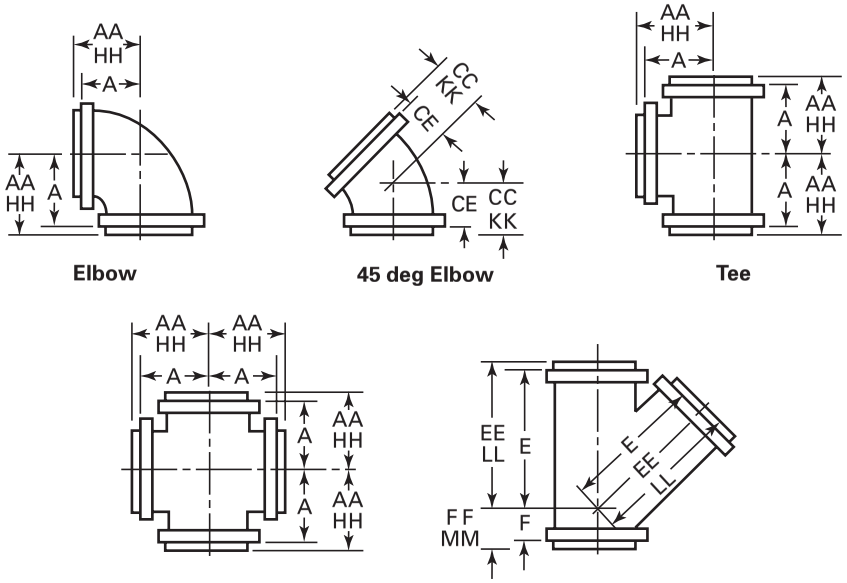

Table G1 Dimensions of Class 400 Flanged Fittings

1	2	3	4	5	6	7	8	9	10	11	12	13	14
					Flange Edge					Raised Face 0.25 in. [Note (1)]			
Nominal Pipe Size	Outside Diameter of Flange, *O*	Thickness of Flange Min., t_f	Wall Thickness of Fitting Min., t_m	Inside Diameter of Fitting, *d*	Center-to-Flange Edge Elbow, Tee, Cross, and True "Y", *A*	Center-to-Flange Edge, 45 deg Elbow, *C*	Long Center-to-Flange Edge, Lateral, *E*	Short Center-to-Flange Edge, Lateral and True "Y", *F*	Flange Edge-to-Flange Edge, Reducer, *G*	Center-to-Contact Surface of Raised Face Elbow, Tee, Cross, and True "Y", AA	Center-to-Contact Surface of Raised Face, 45 deg Elbow, CC	Long Center-to-Contact Surface of Raised Face, Lateral, EE	Short Center-to-Contact Surface of Raised Face, Lateral and True "Y", FF
1/2													
3/4													
1													
1 1/4													
1 1/2													
					Use Class 600 dimensions in these sizes.								
2													
2 1/2													
3													
3 1/2													

Not for Resale

Copyright ASME International
Provided by IHS under license with ASME
No reproduction or networking permitted without license from IHS

Table G1 Dimensions of Class 400 Flanged Fittings (Cont'd)

1	2	3	4	5	6	7	8	9	10	11	12	13	14
					Flange Edge					Raised Face 0.25 in. [Note (1)]			
Nominal Pipe Size	Outside Diameter of Flange, *O*	Thickness of Flange Min., t_f	Wall Thickness of Fitting Min., t_m	Inside Diameter of Fitting, *d*	Center-to-Flange Edge Elbow, Tee, Cross, and True "Y", *A*	Center-to-Flange Edge, 45 deg Elbow, *C*	Long Center-to-Flange Edge, Lateral, *E*	Short Center-to-Flange Edge Lateral, and True "Y", *F*	Flange Edge-to-Flange Edge, Reducer, *G*	Center-to-Contact Surface of Raised Face Elbow, Tee, Cross, and True "Y", *AA*	Center-to-Contact Surface of Raised Face, 45 deg Elbow, *CC*	Long Center-to-Contact Surface of Raised Face, Lateral, *EE*	Short Center-to-Contact Surface of Raised Face, Lateral and True "Y", *FF*
4	10.00	1.38	0.38	4.00	7.75	5.25	15.75	4.25	7.75	8.00	5.50	16.00	4.50
5	11.00	1.50	0.44	5.00	8.75	5.75	16.50	4.75	8.75	9.00	6.00	16.75	5.00
6	12.50	1.62	0.44	6.00	9.50	6.00	18.50	5.00	9.50	9.75	6.25	18.75	5.25
8	15.00	1.88	0.56	8.00	11.50	6.50	22.00	5.50	11.50	11.75	6.75	22.25	5.75
10	17.50	2.12	0.69	10.00	13.00	7.50	25.50	6.00	13.00	13.25	7.75	25.75	6.25
12	20.50	2.25	0.75	12.00	14.75	8.50	29.50	6.25	14.75	15.00	8.75	29.75	6.50
14	23.00	2.38	0.81	13.12	16.00	9.00	32.50	6.75	16.00	16.25	9.25	32.75	7.00
16	25.50	2.50	0.88	15.00	17.50	10.00	36.00	7.75	18.00	17.75	10.25	36.25	8.00
18	28.00	2.62	0.94	17.00	19.00	10.50	39.00	8.25	19.00	19.25	10.75	39.25	8.50
20	30.50	2.75	1.06	18.88	20.50	11.00	42.50	8.75	20.50	20.75	11.25	42.75	9.00
24	36.00	3.00	1.19	22.62	24.00	12.50	50.00	10.25	24.00	24.25	12.75	50.25	10.50

Not for Resale

Copyright ASME International
Provided by IHS under license with ASME
No reproduction or networking permitted without license from IHS

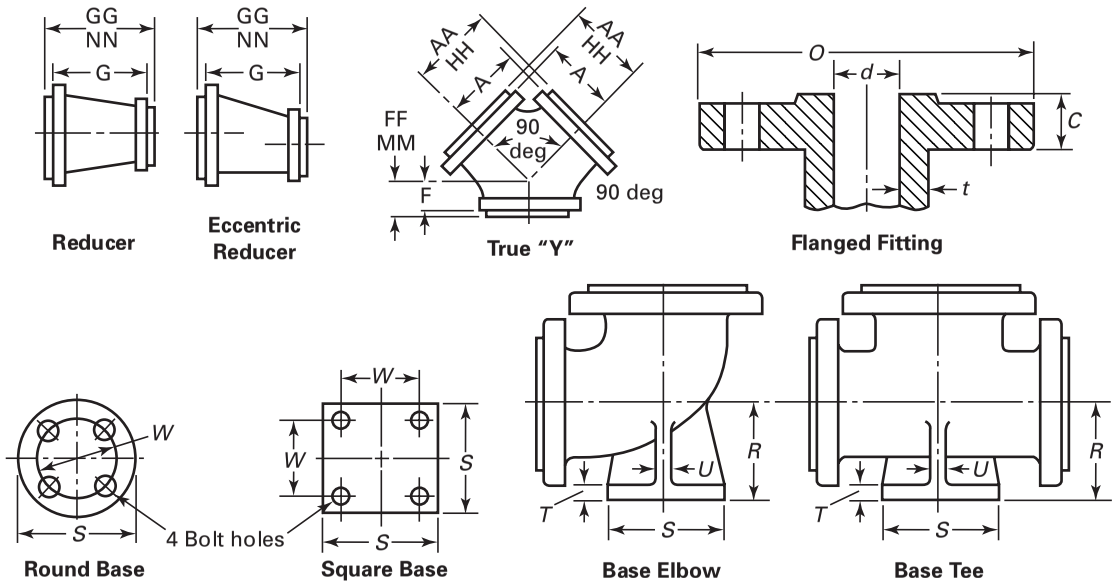

Table G1 Dimensions of Class 400 Flanged Fittings (Cont'd)

15	16	17	18	19	20	21	22	23	24	25	26	1
Raised Face 0.25 in. [Note (1)]	Ring Joint [Note (1)]									Base Drilling [Note (8)]		
Contact Surface-to-Contact Surface of Raised Face Reducer, GG [Note (2)]	Center-to-End Elbow, Tee, Cross, and True "Y", HH [Note (3)]	Center-to-End, 45 deg Elbow, KK [Note (3)]	Long Center-to-End, Lateral, LL [Note (3)]	Short Center-to-End, Lateral and True "Y", MM [Note (3)]	End-to-End Reducer, NN	Center-to-Base, *R* [Notes (4)–(6)]	Diameter of Round Base or Width of Square Base, *S* [Note (4)]	Thickness of Base, *T* [Notes (4), (7)]	Thickness of Ribs, *U* [Note (4)]	Bolt Circle or Bolt Spacing, *W*	Diameter of Drilled Holes	Nominal Pipe Size
												$\frac{1}{2}$
												$\frac{3}{4}$
												1
												$1\frac{1}{4}$
												$1\frac{1}{2}$
Use Class 600 dimensions in these sizes.												2
												$2\frac{1}{2}$
												3
												$3\frac{1}{2}$

Not for Resale

Copyright ASME International
Provided by IHS under license with ASME
No reproduction or networking permitted without license from IHS

Table G1 Dimensions of Class 400 Flanged Fittings (Cont'd)

15	16	17	18	19	20	21	22	23	24	25	26	1
Raised Face 0.25 in. [Note (1)]	Ring Joint [Note (1)]											
Contact Surface-to-Contact Surface of Raised Face Reducer, GG [Note (2)]	Center-to-End Elbow, Tee, Cross, and True "Y", HH [Note (3)]	Center-to-End, 45 deg Elbow, KK [Note (3)]	Long Center-to-End, Lateral, LL [Note (3)]	Short Center-to-End, Lateral and True "Y", MM [Note (3)]	End-to-End Reducer, NN	Center-to-Base, *R* [Notes (4)–(6)]	Diameter of Round Base or Width of Square Base, *S* [Note (4)]	Thickness of Base, *T* [Notes (4), (7)]	Thickness of Ribs, *U* [Note (4)]	Base Drilling [Note (8)]		Nominal Pipe Size
										Bolt Circle or Bolt Spacing, *W*	Diameter of Drilled Holes	
8.25	8.06	5.56	16.06	4.56	Please	6.00	6.50	0.88	0.62	5.00	0.75	4
9.25	9.06	6.06	16.81	5.06	see	6.75	7.50	1.00	0.75	5.88	0.88	5
10.00	9.81	6.31	18.81	5.31	Note (2)	7.50	7.50	1.00	0.75	5.88	0.88	6
12.00	11.81	6.81	22.31	5.81	and	9.00	10.00	1.25	0.88	7.88	0.88	8
13.50	13.31	7.81	25.81	6.31	Note (3).	10.50	10.00	1.25	0.88	7.88	0.88	10
15.25	15.06	8.81	29.81	6.56		12.00	12.50	1.44	1.00	10.62	0.88	12
16.50	16.31	9.31	32.81	7.06		13.50	12.50	1.44	1.00	10.62	0.88	14
18.50	17.81	10.31	36.31	8.06		14.75	12.50	1.44	1.12	10.62	0.88	16
19.50	19.31	10.81	39.31	8.56		16.25	15.00	1.62	1.12	13.00	1.00	18
21.00	20.88	11.38	42.88	9.12		17.88	15.00	1.62	1.25	13.00	1.00	20
24.50	24.44	12.94	50.44	10.69		20.75	17.50	1.88	1.25	15.25	1.12	24

GENERAL NOTES:

(a) Dimensions are in inches.
(b) For tolerances, sea para. 7.
(c) For facings, see para. 6.4.
(d) For flange bolt holes, see para. 6.5 and Table F13 of Annex F.
(e) For spot facing, see para. 6.6.
(f) For intersecting centerlines, center-to-contact surface, and center-to-end dimensions of side outlet fittings, see para. 6.2.4.
(g) For center-to-contact surface and center-to-end dimensions of special degree elbows, see para. 6.2.5.
(h) For reinforcement of certain fittings, see para. 6.1.
(i) For drains, see para. 6.12.

NOTES:

(1) For center-to-contact surface and center-to-end dimensions of reducing fittings, see para. 6.2.3.
(2) These dimensions apply to straight sizes only. (See paras. 6.2.3 and 6.4.2.2). For the center-to-end dimensions of reducing fittings or end-to-end dimensions of reducers, use center-to-flange edge or flange edge-to-flange edge dimensions for largest opening, and add the proper height to provide for ring joint groove applying to each flange. See Table F5 of Annex F for ring joint facing dimensions.
(4) The base dimensions apply to all straight and reducing sizes.
(5) For reducing fittings, the size and center-to-face dimensions of base are determined by the size of the largest opening of fitting. In the case of reducing base elbows, orders shall specify whether the base shall be opposite the larger or smaller opening.
(6) Bases shall be plain faced unless otherwise specified, and the center-to-base face dimension *R* shall be the finished dimension.
(7) Bases may be cast integral or attached as weldments at the option of the manufacturer.
(8) The bases of these fittings are intended for support in compression and are not to be used for anchors or supports in tension or shear.

Not for Resale

Copyright ASME International
Provided by IHS under license with ASME
No reproduction or networking permitted without license from IHS

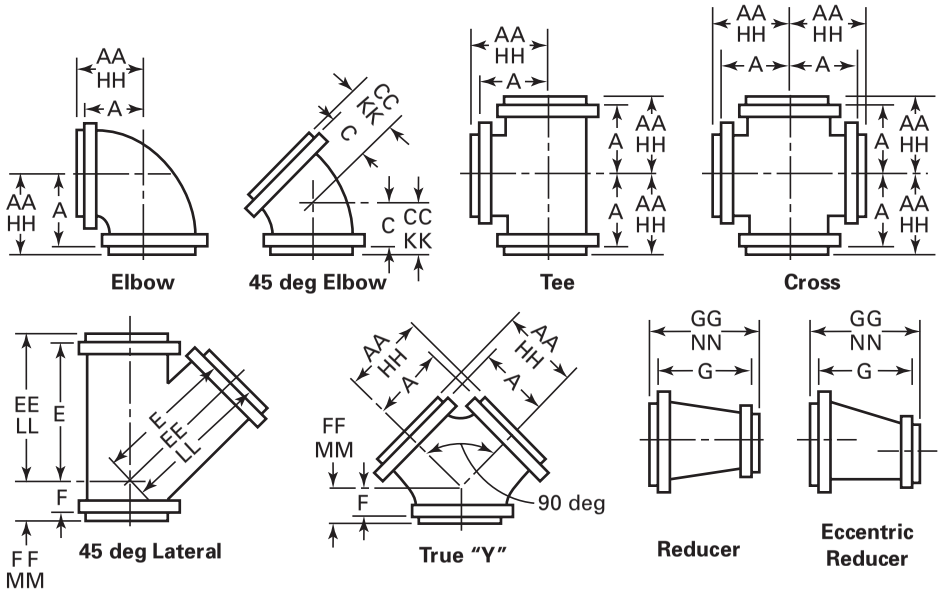

Table G2 Dimensions of Class 600 Flanged Fittings

1	2	3	4	5	6	7	8	9	10	11	12	13	14
					Flange Edge					Raised Face 0.25 in. [Note (1)]			
Nominal Pipe Size	Outside Diameter of Flange, *O*	Thickness of Flange Min., t_m	Wall Thickness of Fitting Min., t_m	Inside Diameter of Fitting, *d*	Center-to-Flange Edge, Elbow, Tee, Cross, and True "Y", *A*	Center-to-Flange Edge, 45 deg Elbow, *C*	Long Center-to Flange Edge, Lateral, *E*	Short Center-to-Flange Edge, Lateral and True "Y", *F*	Flange Edge-to-Flange Edge, Reducer, *G*	Center-to-Contact Surface of Raised Face, Elbow, Tee, Cross, and True "Y", AA	Center-to-Contact Surface of Raised Face, 45 deg Elbow, CC	Long Center-to-Contact Surface of Raised Face, Lateral, EE	Short Center-to-Contact Surface of Raised Face, Lateral and True "Y", FF
1/2	3.75	0.56	0.16	0.50	3.00	1.75	5.50	1.50	4.50	3.25	2.00	5.75	1.75
3/4	4.62	0.62	0.16	0.75	3.50	2.25	6.50	1.75	4.50	3.75	2.50	6.75	2.00
1	4.88	0.69	0.19	1.00	4.00	2.25	7.00	2.00	4.50	4.25	2.50	7.25	2.25
1 1/4	5.25	0.81	0.19	1.25	4.25	2.50	7.75	2.25	4.50	4.50	2.75	8.00	2.50
1 1/2	6.12	0.88	0.22	1.50	4.50	2.75	8.75	2.50	4.50	4.75	3.00	9.00	2.75
2	6.50	1.00	0.25	2.00	5.50	4.00	10.00	3.25	5.50	5.75	4.25	10.25	3.50
2 1/2	7.50	1.12	0.28	2.50	6.25	4.25	11.25	3.25	6.25	6.50	4.50	11.50	3.50
3	8.25	1.25	0.31	3.00	6.75	4.75	12.50	3.75	6.75	7.00	5.00	12.75	4.00
3 1/2	9.00	1.38	0.34	3.50	7.25	5.25	13.75	4.25	7.25	7.50	5.50	14.00	4.50
4	10.75	1.50	0.38	4.00	8.25	5.75	16.25	4.25	8.25	8.50	6.00	16.50	4.50

Not for Resale

Copyright ASME International
Provided by IHS under license with ASME
No reproduction or networking permitted without license from IHS

Table G2 Dimensions of Class 600 Flanged Fittings (Cont'd)

1	2	3	4	5	6	7	8	9	10	11	12	13	14
					Flange Edge					Raised Face 0.25 in. [Note (1)]			
Nominal Pipe Size	Outside Diameter of Flange, *O*	Thickness of Flange Min., t_f	Wall Thickness of Fitting Min., t_m	Inside Diameter of Fitting, *d*	Center-to-Flange Edge, Elbow, Tee, Cross, and True "Y", *A*	Center-to-Flange Edge, 45 deg Elbow, *C*	Long Center-to Flange Edge, Lateral, *E*	Short Center-to-Flange Edge, Lateral, and True "Y", *F*	Flange Edge-to-Flange Edge, Reducer, *G*	Center-to-Contact Surface of Raised Face, Elbow, Tee, Cross, and True "Y", AA	Center-to-Contact Surface of Raised Face, 45 deg Elbow, CC	Long Center-to-Contact Surface of Raised Face, Lateral, EE	Short Center-to-Contact Surface of Raised Face, Lateral and True "Y", FF
5	13.00	1.75	0.44	5.00	9.75	6.75	19.25	5.75	9.75	10.00	7.00	19.50	6.00
6	14.00	1.88	0.50	6.00	10.75	7.25	20.75	6.25	10.75	11.00	7.50	21.00	6.50
8	16.50	2.19	0.62	7.88	12.75	8.25	24.25	6.75	12.75	13.00	8.50	24.50	7.00
10	20.00	2.50	0.75	9.75	15.25	9.25	29.25	7.75	15.25	15.50	9.50	29.50	8.00
12	22.00	2.62	0.91	11.75	16.25	9.75	31.25	8.25	16.25	16.50	10.00	31.50	8.50
14	23.75	2.75	0.97	12.88	17.25	10.50	34.00	8.75	17.25	17.50	10.75	34.25	9.00
16	27.00	3.00	1.09	14.75	19.25	11.50	38.25	9.75	19.25	19.50	11.75	38.50	10.00
18	29.25	3.25	1.22	16.50	21.25	12.00	41.75	10.25	21.25	21.50	12.25	42.00	10.50
20	32.00	3.50	1.34	18.25	23.25	12.75	45.25	10.75	23.25	23.50	13.00	45.50	11.00
24	37.00	4.00	1.59	22.00	27.25	14.50	52.75	12.75	27.25	27.50	14.75	53.00	13.00

Not for Resale

Copyright ASME International
Provided by IHS under license with ASME
No reproduction or networking permitted without license from IHS

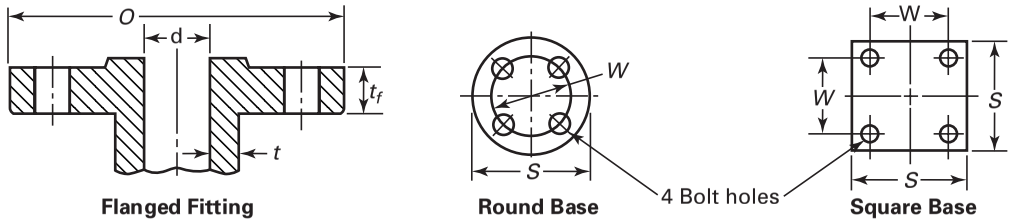

Flanged Fitting | Round Base | Square Base

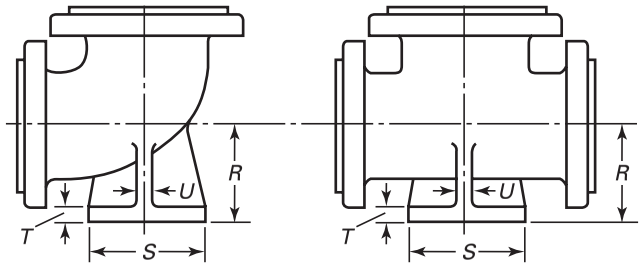

Base Elbow | Base Tee

Table G2 Dimensions of Class 600 Flanged Fittings (Cont'd)

15	16	17	18	19	20	21	22	23	24	25	26	1
Raised Face 0.25 in. [Note (1)]	Ring Joint [Note (1)]									Base Drilling [Note (8)]		
Contact Surface-to-Contact Surface of Raised Face Reducer, GG [Note (2)]	Center-to-End Elbow, Tee, Cross, and True "Y", HH [Note (3)]	Center-to-End, 45 deg Elbow, KK [Note (3)]	Long Center-to-End Lateral, LL [Note (3)]	Short Center-to-End, Lateral And True "Y", MM [Note (3)]	End-to-End Reducer, NN	Center-to-Base, *R* [Notes (4)–(6)]	Diameter of Round Base or Width of Square Base, *S* [Note (4)]	Thickness of Base, *T* [Notes (4), (7)]	Thickness of Ribs, *U* [Note (4)]	Bolt Circle or Bolt Spacing, *W*	Diameter of Drilled Holes	Nominal Pipe Size
5.00	3.22	1.97	5.72	1.72	Please	...	...	...	...	...	...	1/2
5.00	3.75	2.50	6.75	2.00	see	...	...	...	...	...	...	3/4
5.00	4.25	2.50	7.25	2.25	Note (2)	...	...	...	...	...	...	1
5.00	4.50	2.75	8.00	2.50	and	...	...	...	...	...	...	1 1/4
5.00	4.75	3.00	9.00	2.75	Note (3).	...	...	...	...	...	...	1 1/2
6.00	5.81	4.31	10.31	3.56		4.75	6.12	0.81	0.62	4.50	0.88	2
6.75	6.56	4.56	11.56	3.56		5.25	6.12	0.81	0.62	4.50	0.88	2 1/2
7.25	7.06	5.06	12.81	4.06		5.75	6.50	0.88	0.75	5.00	0.75	3
7.75	7.56	5.56	14.06	4.56		6.50	6.50	0.88	0.75	5.00	0.75	3 1/2
8.75	8.56	6.06	16.56	4.56		7.00	7.50	1.00	0.75	5.88	0.88	4

Not for Resale

Copyright ASME International
Provided by IHS under license with ASME
No reproduction or networking permitted without license from IHS

Table G2 Dimensions of Class 600 Flanged Fittings (Cont'd)

15	16	17	18	19	20	21	22	23	24	25	26	1
Raised Face 0.25 in. [Note (1)]	Ring Joint [Note (1)]									Base Drilling [Note (8)]		
Contact Surface-to-Contact Surface of Raised Face Reducer, GG [Note (2)]	Center-to-End Elbow, Tee, Cross, and True "Y", HH [Note (3)]	Center-to-End, 45 deg Elbow, KK [Note (3)]	Long Center-to-End, Lateral, LL [Note (3)]	Short Center-to-End, Lateral And True "Y", MM [Note (3)]	End-to-End Reducer, NN	Center-to-Base, *R* [Notes (4)–(6)]	Diameter of Round Base or Width of Square Base, *S* [Note (4)]	Thickness of Base, *T* [Notes (4), (7)]	Thickness of Ribs, *U* [Note (4)]	Bolt Circle or Bolt Spacing, *W*	Diameter of Drilled Holes	Nominal Pipe Size
10.25	10.06	7.06	19.56	6.06		8.25	10.00	1.25	0.75	7.88	0.88	5
11.25	11.06	7.56	21.06	6.56		9.00	10.00	1.25	0.75	7.88	0.88	6
13.25	13.06	8.56	24.56	7.06		11.00	12.50	1.44	1.00	10.62	0.88	8
15.75	15.56	9.56	29.56	8.06		12.50	12.50	1.44	1.00	10.62	0.88	10
16.75	16.56	10.06	31.56	8.56		13.25	15.00	1.62	1.12	13.00	1.00	12
17.75	17.56	10.81	34.31	9.06		14.75	15.00	1.62	1.12	13.00	1.00	14
19.75	19.56	11.81	38.56	10.06		16.00	15.00	1.62	1.25	13.00	1.00	16
21.75	21.56	12.31	42.06	10.56		...	...	...	...	...	...	18
23.75	23.62	13.12	45.62	11.12		...	...	...	...	...	...	20
27.75	27.69	14.94	53.19	13.19		...	...	...	...	...	...	24

GENERAL NOTES:

(a) Dimensions are in inches.
(b) For tolerances, see para. 7.
(c) For facings, see para. 6.4.
(d) For flange bolt holes, see para. 6.5 and Table F15 of Annex F.
(e) For spot facing, see para. 6.6.
(f) For intersecting centerlines, center-to-contact surface, and center-to-end dimensions of side outlet fittings, see para. 6.2.4.
(g) For center-to-contact surface and center-to-end dimensions of special degree elbows, see para. 6.2.5.
(h) For reinforcement of certain fittings, see para. 6.1.
(i) For drains, see para. 6.12.

NOTES:

(1) For center-to-contact surface and center-to-end dimensions of reducing fittings, see para. 6.2.3.
(2) For contact surface-to-contact surface and end-to-end dimensions of reducers and eccentric reducers, see para. 6.2.3.
(3) These dimensions apply to straight sizes only. (See paras. 6.2.3 and 6.4.2.2.). For the center-to-end dimensions of reducing fittings or end-to-end dimensions of reducers, use center-to-flange edge or flange edge-to-flange edge dimensions for largest opening, and add the proper height to provide for ring joint groove applying to each flange. See Table F5 of Annex F for ring joint facing dimensions.
(4) The base dimensions apply to all straight and reducing sizes.
(5) For reducing fittings, the size and center-to-face dimensions of base are determined by the size of the largest opening of fitting. In the case of reducing base elbows, orders shall specify whether the base shall be opposite the larger or smaller opening.
(6) Bases shall be plain faced unless otherwise specified, and the center-to-base face dimension *R* shall be the finished dimension.
(7) Bases may be cast integral or attached as weldments at the option of the manufacturer.
(8) The bases of these fittings are intended for support in compression and are not to be used for anchors or supports in tension or shear.

Not for Resale

Copyright ASME International
Provided by IHS under license with ASME
No reproduction or networking permitted without license from IHS

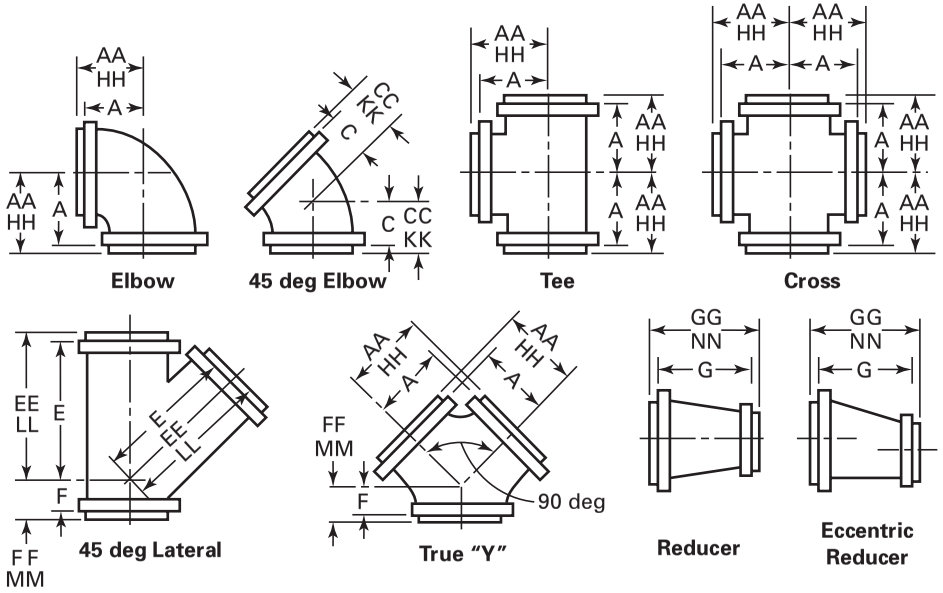

Table G3 Dimensions of Class 900 Flanged Fittings

1	2	3	4	5	6	7	8	9	10	11	12	13	14
					Flange Edge					Raised Face 0.25 in. [Note (1)]			
Nominal Pipe Size	Outside Diameter of Flange, *O*	Thickness of Flange Min., t_f	Wall Thickness of Fitting Min., t_m	Inside Diameter of Fitting, *d*	Center-to-Flange Edge Elbow, Tee, Cross, and True "Y", *A*	Center-to-Flange Edge, 45 deg Elbow, *C*	Long Center-to-Flange Edge, Lateral, *E*	Short Center-to-Flange Edge, Lateral and True "Y", *F*	Flange Edge-to-Flange Edge, Reducer, *G*	Center-to-Contact Surface of Raised Face Elbow, Tee, Cross, and True "Y", AA	Center-to-Contact Surface of Raised Face, 45 deg Elbow, CC	Long Center-to-Contact Surface of Raised Face, Lateral, EE	Short Center-to-Contact Surface of Raised Face, Lateral and True "Y", FF
$\frac{1}{2}$	4.75	0.88	0.16	0.50									
$\frac{3}{4}$	5.12	1.00	0.19	0.69									
1	5.88	1.12	0.22	0.88									
$1\frac{1}{4}$	6.25	1.12	0.25	1.12									
$1\frac{1}{2}$	7.00	1.25	0.28	1.38									
2	8.50	1.50	0.31	1.88									
$2\frac{1}{2}$	9.62	1.62	0.34	2.25									

Use Class 1500 dimensions in these sizes.

Not for Resale

Copyright ASME International
Provided by IHS under license with ASME
No reproduction or networking permitted without license from IHS

Table G3 Dimensions of Class 900 Flanged Fittings (Cont'd)

1	2	3	4	5	6	7	8	9	10	11	12	13	14
					Flange Edge					Raised Face 0.25 in. [Note (1)]			
Nominal Pipe Size	Outside Diameter of Flange, *O*	Thickness of Flange Min., t_f	Wall Thickness of Fitting Min., t_m	Inside Diameter of Fitting, *d*	Center-to-Flange Edge Elbow, Tee, Cross, and True "Y", *A*	Center-to-Flange Edge, 45 deg Elbow, *C*	Long Center-to-Flange Edge, Lateral, *E*	Short Center-to-Flange Edge, Lateral and True "Y", *F*	Flange Edge-to-Flange Edge Reducer, *G*	Center-to-Contact Surface of Raised Face Elbow, Tee, Cross, and True "Y", AA	Center-to-Contact Surface of Raised Face, 45 deg Elbow, CC	Long Center-to-Contact Surface of Raised Face, Lateral, EE	Short Center-to-Contact Surface of Raised Face, Lateral and True "Y", FF
3	9.50	1.50	0.41	2.88	7.25	5.25	14.25	4.25	7.25	7.50	5.50	14.50	4.50
4	11.50	1.75	0.50	3.88	8.75	6.25	17.25	5.25	8.75	9.00	6.50	17.50	5.50
5	13.75	2.00	0.59	4.75	10.75	7.25	20.75	6.25	10.75	11.00	7.50	21.00	6.50
6	15.00	2.19	0.72	5.75	11.75	7.75	22.25	6.25	11.75	12.00	8.00	22.50	6.50
8	18.50	2.50	0.88	7.50	14.25	8.75	27.25	7.25	14.25	14.50	9.00	27.50	7.50
10	21.50	2.75	1.06	9.38	16.25	9.75	31.25	8.25	16.25	16.50	10.00	31.50	8.50
12	24.00	3.12	1.25	11.12	18.75	10.75	34.25	8.75	17.25	19.00	11.00	34.50	9.00
14	25.25	3.38	1.38	12.25	20.00	11.25	36.25	9.25	18.50	20.25	11.50	36.50	9.50
16	27.75	3.50	1.56	14.00	22.00	12.25	40.50	10.25	20.50	22.25	12.50	40.75	10.25
18	31.00	4.00	1.75	15.75	23.75	13.00	45.25	11.75	24.00	24.00	13.25	45.50	12.00
20	33.75	4.25	1.91	17.50	25.75	14.25	50.00	12.75	26.00	26.00	14.50	50.25	13.00
24	41.00	5.50	2.28	21.00	30.25	17.75	59.75	15.25	30.00	30.50	18.00	60.00	15.50

Not for Resale

Copyright ASME International
Provided by IHS under license with ASME
No reproduction or networking permitted without license from IHS

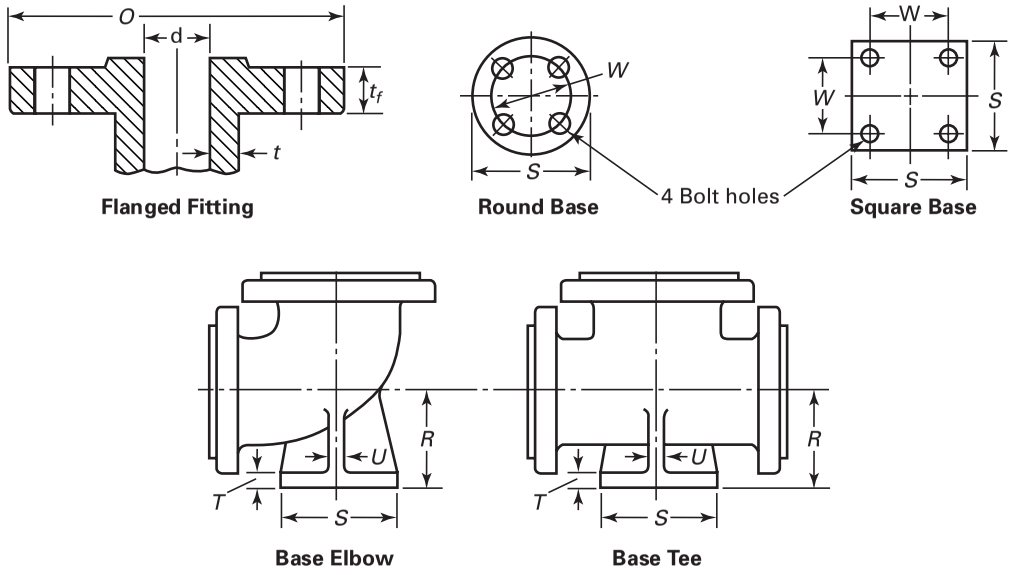

Table G3 Dimensions of Class 900 Flanged Fittings (Cont'd)

15	16	17	18	19	20	21	22	23	24	25	26	1
Raised Face 0.25 in. [Note (1)]	Ring Joint [Note (1)]									Base Drilling [Note (8)]		
Contact Surface-to-Contact Surface of Raised Face Reducer, GG [Note (2)]	Center-to-End Elbow, Tee, Cross, and True "Y", HH [Note (3)]	Center-to-End, 45 deg Elbow, KK [Note (3)]	Long Center-to-End, Lateral, LL [Note (3)]	Short Center-to-End, Lateral and True "Y", MM [Note (3)]	End-to-End Reducer, NN	Center-to-Base, *S* [Notes (4), (5)]	Diameter of Round Base or Width of Square Base, *S* [Note (6)]	Thickness of Base, *T* [Notes (6), (7)]	Thickness of Ribs, *U* [Note (6)]	Bolt Circle or Bolt Spacing, *W*	Diameter of Drilled Holes	Nominal Pipe Size
Use Class 1500 dimensions in these sizes.												$\frac{1}{2}$ $\frac{3}{4}$ 1 $1\frac{1}{4}$ $1\frac{1}{2}$ 2 $2\frac{1}{2}$
7.75	7.56	5.56	14.56	4.56	Please see Note (2) and Note (3)	5.75	6.50	0.88	0.75	5.00	0.75	3
9.25	9.06	6.56	17.56	5.56		7.00	7.50	1.00	0.75	5.88	0.88	4
11.25	11.06	7.56	21.06	6.56		8.25	10.00	1.25	0.75	7.88	0.88	5
12.25	12.06	8.06	22.56	6.56		9.00	10.00	1.25	0.75	7.88	0.88	6

Not for Resale

Table G3 Dimensions of Class 900 Flanged Fittings (Cont'd)

15	16	17	18	19	20	21	22	23	24	25	26	1
Raised Face 0.25 in. [Note (1)]	Ring Joint [Note (1)]									Base Drilling [Note (8)]		
Contact Surface-to-Contact Surface of Raised Face Reducer, GG [Note (2)]	Center-to-End Elbow, Tee, Cross, and True "Y", HH [Note (3)]	Center-to-End, 45 deg Elbow, KK [Note (3)]	Long Center-to-End, Lateral, LL [Note (3)]	Short Center-to-End Lateral and True "Y", MM [Note (3)]	End-to-End Reducer, NN	Center-to-Base, *S* [Notes (4), (5)]	Diameter of Round Base or Width of Square Base, *S* [Note (6)]	Thickness of Base, *T* [Notes (6), (7)]	Thickness of Ribs, *U* [Note (6)]	Bolt Circle or Bolt Spacing, *W*	Diameter of Drilled Holes	Nominal Pipe Size
14.75	14.56	9.06	27.56	7.56		11.00	12.50	1.44	1.00	10.62	0.88	8
16.75	16.56	10.06	31.56	8.56		12.50	12.50	1.44	1.00	10.62	0.88	10
17.75	19.06	11.06	34.56	9.06		13.25	15.00	1.62	1.12	13.00	1.00	12
19.00	20.44	11.69	36.69	9.69		14.75	15.00	1.62	1.12	13.00	1.00	14
21.00	22.44	12.69	40.94	10.69		16.00	15.00	1.62	1.25	13.00	1.00	16
24.50	24.25	13.50	45.75	12.25		. . .	. . .	. . .	. . .	. . .	. . .	18
26.50	26.25	14.75	50.50	13.25		. . .	. . .	. . .	. . .	. . .	. . .	20
30.50	30.88	18.38	60.38	15.88		. . .	. . .	. . .	. . .	. . .	. . .	24

GENERAL NOTES:

(a) Dimensions are in inches.
(b) For tolerances, see para. 7.
(c) For facings, see para. 6.4.
(d) For flange bolt holes, see para. 6.5 and Table F17 of Annex F.
(e) For spot facing, see para. 6.6.
(f) For intersecting center fines, center-to-contact surface, and center-to-end dimensions of side outlet fittings, see para. 6.2.4
(g) For center-to-contact surface and center-to-end dimensions of special degree elbows, see para. 6.2.5.
(h) For reinforcement of certain fittings, see para. 6.1.
(i) For drains, see para. 6.12.

NOTES:

(1) For center-to-contact surface and center-to-end dimensions of reducing fittings, see para. 6.2.3.
(2) For contact surface-to-contact surface and center-to-end dimensions of reducers and eccentric reducers, see para. 6.2.3.
(3) These dimensions apply to straight sizes only. (See paras. 6.2.3 and 6.4.2.2). For the center-to-end dimensions of reducing fittings or end-to-end dimensions of reducers, use center-to-flange edge or flange edge-to-flange edge dimensions for largest opening, and add the proper height to provide for ring joint groove applying to each flange. See Table F5 of Annex F for ring joint facing dimensions.
(4) For reducing fittings, the size and center-to-face dimensions of base are determined by the size of the largest opening fitting. In the case of reducing base elbows, orders shall specify whether the base shall be opposite the larger or smaller opening.
(5) Bases shall be plain faced unless otherwise specified, and the center-to-base face dimension R shall be the finished dimension.
(6) The base dimensions apply to all straight and reducing sizes.
(7) Bases may be cast integral or attached as weldments at the option of the manufacturer.
(8) The bases of these fittings are intended for support in compression and are not to be used for anchors or supports in tension or shear.

Copyright ASME International
Provided by IHS under license with ASME
No reproduction or networking permitted without license from IHS
Not for Resale

Copyright ASME International
Provided by IHS under license with ASME
No reproduction or networking permitted without license from IHS

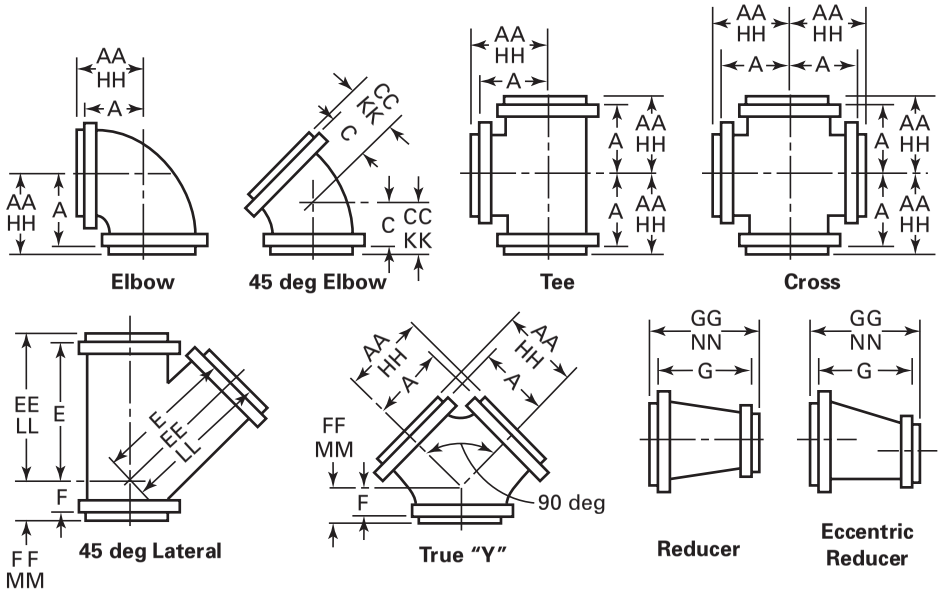

Table G4 Dimensions of Class 1500 Flanged Fittings

1	2	3	4	5	6	7	8	9	10	11	12	13	14
					Flange Edge					Raised Face 0.25 in. [Note (1)]			
Nominal Pipe Size	Outside Diameter of Flange, *O*	Thickness of Flange Min., t_f	Wall Thickness of Fitting Min., t_m	Inside Diameter of Fitting, *d*	Center-to-Flange Edge Elbow, Tee, Cross, and True "Y", *A*	Center-to-Flange Edge, 45 deg Elbow, *C*	Long Center-to-Flange Edge, Lateral, *E*	Short Center-to-Flange Edge, Lateral and True "Y", *F*	Flange Edge to Flange Edge Reducer, *G*	Center-to-Contact Surface of Raised Face, Elbow, Tee, Cross, and True "Y", AA	Center-to-Contact Surface of Raised Face, 45 deg Elbow, CC	Long Center-to-Contact Surface of Raised Face, Lateral, EE	Short Center-to-Contact Surface of Raised Face, Lateral and True "Y", FF
1/2	4.75	0.88	0.19	0.50	4.00	2.75	...	...	...	4.25	3.00	...	...
3/4	5.12	1.00	0.23	0.69	4.25	3.00	...	...	...	4.50	3.25	...	...
1	5.88	1.12	0.26	0.88	4.75	3.25	8.75	2.25	4.50	5.00	3.50	9.00	2.50
1 1/4	6.25	1.12	0.31	1.12	5.25	3.75	9.75	2.75	5.25	5.50	4.00	10.00	3.00
1 1/2	7.00	1.25	0.38	1.38	5.75	4.00	10.75	3.25	5.75	6.00	4.25	11.00	3.50
2	8.50	1.50	0.44	1.88	7.00	4.50	13.00	3.75	6.75	7.25	4.75	13.25	4.00
2 1/2	9.62	1.62	0.50	2.25	8.00	5.00	15.00	4.25	7.75	8.25	5.25	15.25	4.50
3	10.50	1.88	0.62	2.75	9.00	5.50	17.00	4.75	8.75	9.25	5.75	17.25	5.00
4	12.25	2.12	0.75	3.62	10.50	7.00	19.00	5.75	10.25	10.75	7.25	19.25	6.00

Not for Resale

Copyright ASME International
Provided by IHS under license with ASME
No reproduction or networking permitted without license from IHS

Table G4 Dimensions of Class 1500 Flanged Fittings (Cont'd)

1	2	3	4	5	6	7	8	9	10	11	12	13	14
					Flange Edge					Raised Face 0.25 in. [Note (1)]			
Nominal Pipe Size	Outside Diameter of Flange, *O*	Thickness of Flange Min., t_f	Wall Thickness of Fitting Min., t_m	Inside Diameter of Fitting, *d*	Center-to-Flange Edge Elbow, Tee, Cross, and True "Y", *A*	Center-to-Flange Edge, 45 deg Elbow, *C*	Long Center-to-Flange Edge, Lateral, *E*	Short Center-to-Flange Edge, Lateral and True "Y", *F*	Flange Edge to Flange Edge, Reducer, *G*	Center-to-Contact Surface of Raised Face, Elbow, Tee, Cross, and True "Y", AA	Center-to-Contact Surface of Raised Face, 45 deg Elbow, CC	Long Center-to-Contact Surface of Raised Face, Lateral, EE	Short Center-to-Contact Surface of Raised Face, Lateral and True "Y", FF
5	14.75	2.88	0.91	4.38	13.00	8.50	23.00	7.25	13.25	13.25	8.75	23.25	7.50
6	15.50	3.25	1.09	5.38	13.62	9.12	24.62	7.88	14.00	13.88	9.38	24.88	8.12
8	19.00	3.62	1.41	7.00	16.12	10.62	29.62	8.88	16.50	16.38	10.88	29.88	9.12
10	23.00	4.25	1.72	8.75	19.25	11.75	35.75	10.00	19.75	19.50	12.00	36.00	10.25
12	26.50	4.88	2.00	10.38	22.00	13.00	40.50	11.75	22.50	22.25	13.25	40.75	12.00
14	29.50	5.25	2.19	11.38	24.50	14.00	43.75	12.25	25.25	24.75	14.25	44.00	12.50
16	32.50	5.75	2.50	13.00	27.00	16.00	48.00	14.50	27.75	27.25	16.25	48.25	14.75
18	36.00	6.38	2.81	14.62	30.00	17.50	53.00	16.25	31.00	30.25	17.75	53.25	16.50
20	38.75	7.00	3.12	16.38	32.50	18.50	57.50	17.50	33.50	32.75	18.75	57.75	17.75
24	46.00	8.00	3.72	19.62	38.00	20.50	67.00	20.25	39.25	38.75	20.75	67.25	20.50

Not for Resale

Copyright ASME International
Provided by IHS under license with ASME
No reproduction or networking permitted without license from IHS

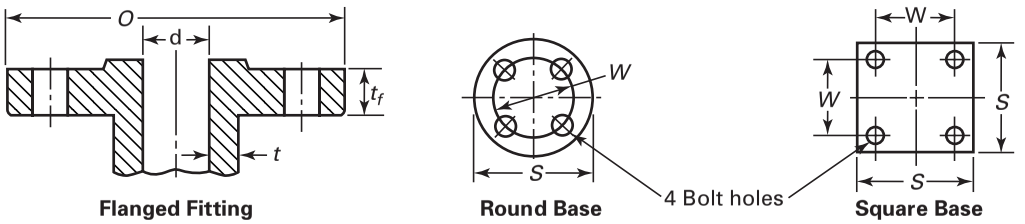

Flanged Fitting | Round Base | Square Base

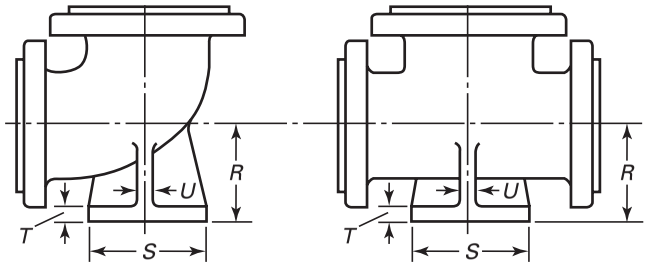

Base Elbow | Base Tee

Table G4 Dimensions of Class 1500 Flanged Fittings (Cont'd)

15	16	17	18	19	20	21	22	23	24	25	26	1
Raised Face 0.25 in. [Note (1)]	Ring Joint [Note (1)]									Base Drilling [Note (8)]		
Contact Surface-to-Contact Surface of Raised Face Reducer, GG [Note (2)]	Center-to-End Elbow, Tee, Cross, and True "Y", HH [Note (3)]	Center-to-End, 45 deg Elbow, KK [Note (3)]	Long Center-to-End, Lateral, LL [Note (3)]	Short Center-to- End, Lateral and True "Y", MM [Note (3)]	End-to-End Reducer, NN	Center-to-Base, *R* [Notes (4)–(6)]	Diameter of Round Base or Width of Square Base, *S* [Note (4)]	Thickness of Base, *T* [Notes (4), (7)]	Thickness of Ribs, *U* [Note (4)]	Bolt Circle or Bolt Spacing, *W*	Diameter of Drilled Holes	Nominal Pipe Size
...	4.25	3.00	...	...	Please	...	...	...	...	...	...	1/2
...	4.50	3.25	...	...	see	...	...	...	...	...	...	3/4
5.00	5.00	3.50	9.00	2.50	Note (2)	...	...	...	...	...	...	1
5.75	5.50	4.00	10.00	3.00	and	...	...	...	...	...	...	1 1/4
					Note (3)							
6.25	6.00	4.25	11.00	3.50		...	...	...	...	...	...	1 1/2
7.25	7.31	4.81	13.31	4.06		5.50	6.50	0.88	0.75	5.00	0.75	2
8.25	8.31	5.31	15.31	4.56		6.00	6.50	0.88	0.75	5.00	0.75	2 1/2
9.25	9.31	5.81	17.31	5.06		6.50	7.50	1.00	0.75	5.88	0.88	3
10.75	10.81	7.31	19.31	6.06		7.75	10.00	1.25	0.75	7.88	0.88	4
13.75	13.31	8.81	23.31	7.56		9.00	10.00	1.25	0.75	7.88	0.88	5
14.50	14.00	9.50	25.00	8.25		9.75	12.50	1.44	1.00	10.62	0.88	6
17.00	16.56	11.06	30.06	9.31		11.50	12.50	1.44	1.00	10.62	0.88	8

Not for Resale

Copyright ASME International
Provided by IHS under license with ASME
No reproduction or networking permitted without license from IHS

Table G4 Dimensions of Class 1500 Flanged Fittings (Cont'd)

15	16	17	18	19	20	21	22	23	24	25	26	1
Raised Face 0.25 in. [Note (1)]	Ring Joint [Note (1)]											
Contact Surface-to-Contact Surface of Raised Face Reducer, GG [Note (2)]	Center-to-End Elbow, Tee, Cross, and True "Y", HH [Note (3)]	Center-to-End, 45 deg Elbow, KK [Note (3)]	Long Center-to-End Lateral, LL [Note (3)]	Short Center-to-End, Lateral and True "Y", MM [Note (3)]	End-to-End Reducer, NN	Center-to-Base, *R* [Notes (4)–(6)]	Diameter of Round Base or Width of Square Base, *S* [Note (4)]	Thickness of Base, *T* [Notes (4), (7)]	Thickness of Ribs, *U* [Note (4)]	Base Drilling [Note (8)]		Nominal Pipe Size
										Bolt Circle or Bolt Spacing, *W*	Diameter of Drilled Holes	
20.25	19.69	12.19	36.19	10.44		13.75	15.00	1.62	1.12	13.00	1.00	10
23.00	22.56	13.56	41.06	12.31		15,50	15.00	1.62	1.12	13.00	1.00	12
25.75	25.12	14.62	44.38	12.88		17.25	17.50	1.88	1.25	15.25	1.12	14
28.25	27.69	16.69	48.69	15.19		18.75	17.50	1.88	1.25	15.25	1.12	16
31.50	30.69	18.19	53.69	16.94		...	...	...	...	...	...	18
34.00	33.19	19.19	58.19	18.19		...	...	...	...	...	...	20
39.75	38.81	21.31	67.81	21.06		...	...	...	...	...	...	24

GENERAL NOTES:

(a) Dimensions are in inches.
(b) For tolerances, see para. 7.
(c) For facings, see para. 6.4.
(d) For flange bolt holes, see para. 6.5 and Table F19 of Annex F.
(e) For spot facing, see para. 6.6.
(f) For intersecting centerlines, center-to-contact surface, and center-to-end dimensions of side outlet fittings, see para. 6.2.4.
(g) For center-to-contact surface and center-to-end dimensions of special degree elbows, see para. 6.2.5.
(h) For reinforcement of certain fittings, see para. 6.1.
(i) For drains, see para. 6.12.

NOTES:

(1) For center-to-contact surface and center-to-end dimensions of reducing fittings, see para. 6.2.3.
(2) For contact surface-to-contact surface and end-to-end dimensions of reducers and eccentric reducers, see para. 6.2.3.
(3) These dimensions apply to straight sizes only. (See paras. 6.2.3 and 6.4.2.2). For the center-to-end dimensions of reducing fittings or end-to-end dimensions of reducers, use center-to-flange edge or flange edge-to-flange edge dimensions for largest opening, and add the proper height to provide for ring joint groove applying to each flange. See Table F5 of Annex F for ring joint facing dimensions.
(4) The base dimensions apply to all straight and reducing sizes.
(5) For reducing fittings, the size and center-to-face dimensions of base are determined by the size of the largest opening fitting. In the case of reducing base elbows, orders shall specify whether the base shall be opposite the larger or smaller opening.
(6) Bases shall be plain faced unless otherwise specified, and the center-to-base dimension *R* shall be the finished dimension.
(7) Bases may be cast integral or attached as weldments at the option of the manufacturer.
(8) The bases of these fittings are intended for support in compression and are not to be used for anchors or supports in tension or shear.

Not for Resale

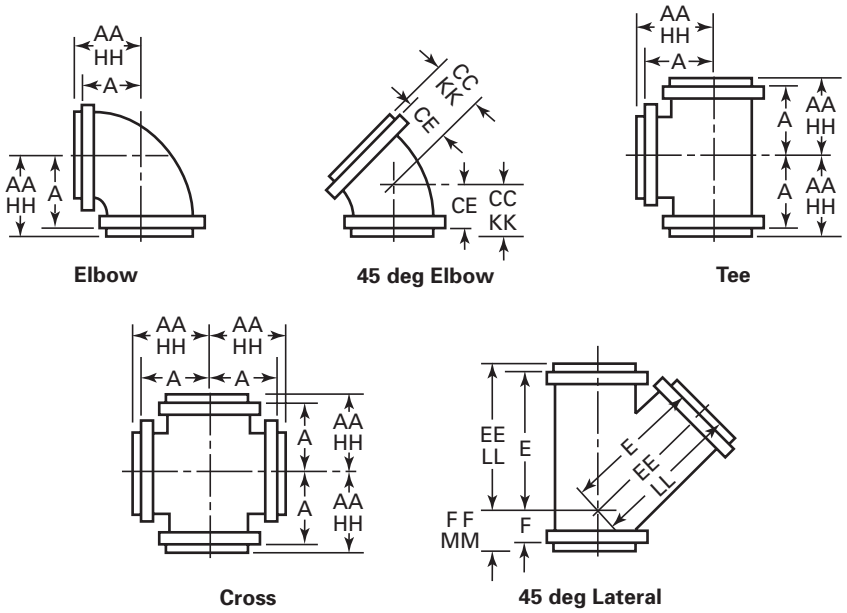

Table G5 Dimensions of Class 2500 Flanged Fittings

1	2	3	4	5	6	7	8	9	10
					Flange Edge				
Nominal Pipe Size	Outside Diameter of Flange, *O*	Thickness of Flange Min., t_f	Wall Thickness of Fitting Min., t_m	Inside Diameter of Fitting, *d*	Center-to-Flange Edge, Elbow, Tee, Cross, and True "Y", *A*	Center-to-Flange Edge, 45 deg Elbow, *CE*	Long Center-to-Flange Edge Lateral, *E*	Short Center-to-Flange Edge, Lateral and True "Y", *F*	Flange Edge-to-Flange Edge, Reducer, *G*
1/2	5.25	1.19	0.25	0.44	4.94	...	...	...	...
3/4	5.50	1.25	0.28	0.56	5.12	...	...	...	...
1	6.25	1.38	0.34	0.75	5.81	3.75	...	...	...
1 1/4	7.25	1.50	0.44	1.00	6.62	4.00	...	...	...
1 1/2	8.00	1.75	0.50	1.12	7.31	4.50	...	...	...
2	9.25	2.00	0.62	1.50	8.62	5.50	15.00	5.00	9.00
2 1/2	10.50	2.25	0.75	1.88	9.75	6.00	17.00	5.50	10.00
3	12.00	2.62	0.88	2.25	11.12	7.00	19.50	6.50	11.25
4	14.00	3.00	1.09	2.88	13.00	8.25	22.75	7.50	13.00
5	16.50	3.62	1.34	3.62	15.38	9.75	27.00	9.00	15.25
6	19.00	4.25	1.59	4.38	17.75	11.25	31.00	10.25	17.50
8	21.75	5.00	2.06	5.75	19.88	12.50	35.00	11.50	20.00
10	26.50	6.50	2.59	7.25	24.75	15.75	43.00	14.50	25.00
12	30.00	7.25	3.03	8.62	27.75	17.50	49.00	16.00	28.50

Copyright ASME International
Provided by IHS under license with ASME
No reproduction or networking permitted without license from IHS
Not for Resale

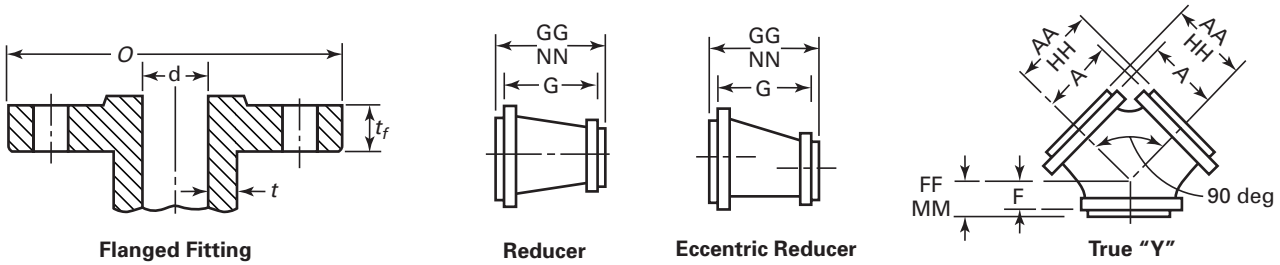

Flanged Fitting | Reducer | Eccentric Reducer | True "Y"

Table G5 Dimensions of Class 2500 Flanged Fittings (Cont'd)

11	12	13	14	15	16	17	18	19	20	1
Raised Face 0.25 in. [Note (1)]						Ring Joint [Note (1)]				
Center-to-Contact Surface of Raised Face Elbow, Tee, Cross, and True "Y", AA	Center-to-Contact Surface of Raised Face 45 deg Elbow, CC	Long Center-to-Contact Surface of Raised Face Lateral, EE	Short Center-to-Contact Surface of Raised Face Lateral and True "Y", FF	Contact Surface-to-Contact Surface of Raised Face Reducer, GG [Note (2)]	Center-to-End, Elbow, Tee, Cross, and True "Y", HH [Note (3)]	Center-to-End, 45 deg Elbow, KK [Note (3)]	Long Center-to-End Lateral, LL [Note (3)]	Short Center-to- End Lateral and True "Y", MM [Note (3)]	End-to-End Reducer, NN [Notes (2), (3)]	Nominal Pipe Size
5.19	...	...	...	...	5.19	...	...	...	...	1/2
5.37	...	...	...	...	5.19	...	...	...	...	3/4
6.06	4.00	...	...	...	6.06	4.00	...	...	...	1
6.87	4.25	...	...	...	6.94	4.31	...	...	...	1 1/4
7.56	4.75	...	...	...	7.62	4.81	...	...	...	1 1/2
8.87	5.75	15.25	5.25	9.50	8.94	5.81	15.31	5.31	...	2
10.00	6.25	17.25	5.75	10.50	10.12	6.38	17.38	5.88	...	2 1/2
11.37	7.25	19.75	6.75	11.75	11.50	7.38	19.88	6.88	...	3
13.25	8.50	23.00	7.75	13.50	13.44	8.69	23.19	7.94	...	4
15.62	10.00	27.25	9.25	15.75	15.88	10.25	27.50	9.50	...	5
18.00	11.50	31.25	10.50	18.00	18.25	11.75	31.50	10.75	...	6
20.12	12.75	35.25	11.75	20.50	20.44	13.06	35.56	12.06	...	8
25.00	16.00	43.25	14.75	25.50	25.44	16.44	43.69	15.19	...	10
28.00	17.75	49.25	16.25	29.00	28.44	18.19	49.69	16.62	...	12

GENERAL NOTES:

(a) Dimensions are in inches.

(b) For tolerances, see para. 7.

(c) For facings, see para. 6.4.

(d) For flange bolt holes, see para 6.5 and Table F21 of Annex F.

(e) For spot facing, see para. 6.6

(f) For intersecting centerlines, center-to-contact surface, and center-to-end dimensions of side outlet fittings, see para. 6.2.4.

(g) For center-to-contact surface and center-to-end dimensions of special degree elbows, see para. 6.2.5.

(h) For reinforcement of certain fittings, see para. 6.1.

(i) For drains, see para. 6.12.

NOTES:

(1) For center-to-contact surface and center-to-end dimensions of reducing fittings, see para. 6.2.3.

(2) For contact surface-to-contact surface and end-to-end dimensions of reducers and eccentric reducers, see para. 6.2.3.

(3) These dimensions apply to straight sizes only (See paras. 6.2.3 and 6.4.2.2). For the center-to-end dimensions of reducing fittings or end-to-end dimensions of reducers, use center-to-flange edge or flange edge-to-flange edge dimensions for largest opening, and add the proper height to provide for ring joint groove applying to each flange. See Table F5 of Annex F for ring joint facing dimensions.

Copyright ASME International
Provided by IHS under license with ASME
No reproduction or networking permitted without license from IHS
Not for Resale

ANNEX H
REFERENCES[1]

H1 GENERAL

The following is a list of standards and specifications referenced in this Standard, showing the year of approval. Products covered by each ASTM specification are listed for convenience. (See specifications for exact titles and detailed contents.)

H2 ASME PUBLICATIONS

ASME B1.1-1989 (R2001), Unified Inch Screw Threads (UN and UNR Thread Form)
ASME B1.20.1-1983 (R2001), Pipe Threads, General Purpose (Inch)
ASME B16.20-1998, Metallic Gaskets for Pipe Flanges—Ring-Joint, Spiral-Wound and Jacketed
ASME B16.21-1992, Nonmetallic Flat Gaskets for Pipe Flanges
ASME B16.25-1997, Buttwelding Ends
ASME B16.34-2002, Valves—Flanged, Threaded, and Welding End
ASME B18.2.1-1996, Square and Hex Bolts and Screws—Inch Series
ASME B18.2.2-1987 (R1999), Square and Hex Nuts (Inch Series)
ASME PCC-1-2000, Guidelines for Pressure Boundary Bolted Flange Joint Assembly
ASME B36.l0M-2000, Welded and Seamless Wrought Steel Pipe
ASME B46.1-2002, Surface Texture (Surface Roughness, Waviness, and Lay)

H2.1 ASME Boiler and Pressure Vessel Code, 2001 Edition (Including Addenda through 2002)

Section I, Power Boilers
Section II, Materials
Section III, Rules for Construction of Nuclear Power Plant Components
Section VIII, Div. 1 and 2, Pressure Vessels
Section IX, Welding and Brazing Qualifications

Publisher: The American Society of Mechanical Engineers (ASME International) Three Park Avenue, New York, NY 10016-5990; ASME Order Department: 22 Law Drive, Box 2300, Fairfield, NJ 07007-2300

[1] This Annex is an integral part of ASME B16.5-2003, and is placed after the main text for convenience.

H3 ASTM PUBLICATIONS

A 105-2001, Carbon Steel Forgings for Piping Components
A 106-1999e1, Seamless Carbon Steel Pipe for High-Temperature Service
A 182-2001e1, Forged or Rolled Alloy-Steel Pipe Flanges, Forged Fittings, and Valves and Parts for High Temperature Service
A 193-2001b, Alloy-Steel and Stainless Steel Bolting Materials for High-Temperature Service
A 194-2001a, Carbon and Alloy Steel Nuts for Bolts for High-Pressure and High-Temperature Service, or Both
A 203-1997, Pressure Vessel Plates, Alloy Steel, Nickel
A 204-1993 (R1999), Pressure Vessel Plates, Alloy Steel, Molybdenum
A 216-1993 (1998), Steel Castings, Carbon, Suitable for Fusion Welding, for High-Temperature Service
A 217-2002, Steel Castings, Martensitic Stainless and Alloy, for Pressure Containing Parts, Suitable for High-Temperature Service
A 240-2002, Chromium and Chromium-Nickel Stainless Steel Plate, Sheet, and Strip for Pressure Vessels and for General Applications
A 307-2000, Carbon Steel Bolts and Studs, 60,000 psi Tensile Strength
A 320-2001, Alloy/Steel Bolting Materials for Low-Temperature Service
A 350-2000c Carbon and Low-Alloy Steel Forgings, Requiring Notch Toughness Testing for Piping Components
A 351-2000, Castings, Austenitic, Austenitic-Ferritic (Duplex), for Pressure Containing Parts
A 352-1993 (R1998), Steel Castings, Ferritic and Martensitic, for Pressure-Containing Parts, Suitable for Low-Temperature Service
A 354-2001, Quenched and Tempered Alloy Steel Bolts, Studs and Other Externally Threaded Fasteners
A 387-1999e1, Pressure Vessel Plates, Alloy Steel, Chromium-Molybdenum
A 449-2000, Quenched and Tempered Steel Bolts and Studs
A 453-2000el, High-Temperature Bolting Materials, with Expansion Coefficients Comparable to Austenitic Stainless Steels
A 515-2001, Pressure Vessel Plates, Carbon Steel, for Intermediate- and Higher-Temperature Service
A 516-2001, Pressure Vessel Plates, Carbon Steel, For Moderated- and Lower-Temperature Service

Copyright ASME International
Provided by IHS under license with ASME
No reproduction or networking permitted without license from IHS
Not for Resale

A 537-1995 (R2000), Pressure Vessel Plates, Heat-Treated, Carbon-Manganese-Silicon-Steel
A 540-2000, Alloy-Steel Bolting Materials for Special Applications
B 127-1998, Nickel-Copper Alloy (UNS N04400) Plate, Sheet, and Strip
B 160-1999, Nickel Rod and Bar
B 162-1999, Nickel Plate, Sheet and Strip
B 164-1998, Nickel-Copper Alloy Rod, Bar, and Wire
B 166-2001, Nickel-Chromium-Iron Alloys (UNS N06600, N06601, N06603, N06690, N06693, N06025, and N06045) and Nickel-Chromium-Cobalt-Molybdenum Alloy (UNS N06617) Rod, Bar, and Wire
B 168-2001, Nickel-Chromium-Iron Alloys (UNS N06600, N06601, N06603, N06690, N06693, N06025, and N06045)) and Nickel-Chronnium-Cobalt-Molybdenum Alloy (UNS N06617) Plate, Sheet, and Strip
B 333-1998, Nickel-Molybdenum Alloy Plate, Sheet, and Strip
B 335-2001, Seamless Ferritic Alloy-Steel Pipe for High Temperature Service
B 408-2001, Nickel-Iron-Chromium Alloy Rod and Bar
B 409-2001, Nickel-Iron-Chromium Alloy, Plate, Sheet, Strip
B 424-1998a, Ni-Fe-Cr-Mo-Cu Alloy (UNS N08825 and N08821) Plate, Sheet, and Strip
B 425-1999, Ni-Fe-Cr-Mo-Cu Alloy (UNS N08825 and UNS N08221) Rod and Bar
B 434-2000, Nickel-Molybdenum-Chromium-Iron Alloys (UNS N10003, UNS N10242) Plate, Sheet, and Strip
B 435-1998a, UNS N06002, UNS N06230, UNS N12160, and UNS R30556 Plate, Sheet, and Strip
B 443-2000e1, Nickel-Chromium-Molybdenum-Columbium Alloy (UNS N06625) and Nickel-Chromium-Molybdenum-Silicon Alloy (UNS N06219) Plate, Sheet, and Strip
B 446-2000e1, Nickel-Chromium-Molybdenum-Columbium Alloy (N06625), Nickel-Chromium-Molybdenum-Silicon Alloy (UNS N06219) Rod and Bar, and Nickel-Chromium-Molybdenum-Tungsten Alloy (UNS N06650) Rod and Bar
B 462-2000a, Forged or Rolled UNS N06030, UNS N06022, UNS N06200, UNS N08020, UNS N08024, UNS N08026, UNS N08367, UNS N10276, UNS N10665, UNS N10675 and UNS R20033 Alloy Pipe Flanges, Forged Fittings and Valves and Parts for Corrosive High-Temperature Service
B 463-1999, UNS N08020, UNS N08024, and UNS N08026 Alloy Plate, Sheet, and Strip
B 473-1996, UNS N08020, UNS N08024, and UNS N08026 Nickel Alloy Bar and Wire
B 511-2001, Nickel-Iron-Chromium-Silicon Alloy Bars and Shapes
B 536-1995 Nickel-Iron-Chromium-Silicon Alloy (UNS N08330 and N08332) Plate, Sheet, and Strip
B 564-2000a, Nickel Alloy Forgings
B 572-1998a, UNS N06002, UNS N06230, UNS N12160, and UNS R30556 Rod
B 573-2000, Nickel-Molybdenum-Chromium-Iron Alloy (UNS N10003, N10242) Rod
B 574-1999a, Low-Carbon Nickel-Molybdenum-Chromium, Low-Carbon Nickel-Chromium-Molybdenum, Low Carbon Nickel Molybdenum-Chromium-Tantalum, Low-Carbon Nickel Chromium-Molybdenum-Copper, Low-Carbon Nickel-Chromium-Molybdenum-Tungsten Alloy Rod
B 575-1999a, Low-Carbon Nickel-Molybdenum-Chromium, Low-Carbon Nickel-Chromium-Molybdenum, Low-Carbon Nickel-Chromium Molybdenum-Copper, Low-Carbon Nickel-Chromium-Tantalum, Low-Carbon Nickel-Chromium-Molybdenum-Tungsten Alloy Plate, Sheet, and Strip
B 581-1997, Nickel-Chromium-Iron-Molybdenum-Copper Alloy Rod
B 582-1997, Nickel-Chromium-Iron-Molybdenum-Copper Alloy Plate, Sheet, and Strip
B 599-1992 (R1997), Nickel-Iron-Chromium-Molybdenum-Columbium Stabilized Alloy (UNS N08700) Plate, Sheet, and Strip
B 620-1998a, Nickel-Iron-Chromium-Molybdenum Alloy (UNS N08320) Plate, Sheet, and Strip
B 621-1995a, Nickel-Iron-Chromium-Molybdenum Alloy (UNS N08320) Rod
B 625-1999, UNS N08904, UNS N08925, UNS N08031, UNS N08932, UNS N08926, and UNS R20033 Plate, Sheet, and Strip
B 649-1995, Ni-Fe-Cr-Mo-Cu Low Carbon Alloy (UNS N08904) and Ni-Fe Cr-Mo-Cu-N Low Carbon Alloys (UNS N08925, UNS N08031, and UNS N08926), and Cr-Ni-Fe-N Low-Carbon Alloy (UNS R20033) Bar and Wire
B 672-1995, Nickel-Iron-Chromium-Molybdenum-Columbium Stabilized Alloy (UNS N08700) Bar and Wire
B 688-1996, Chromium-Nickel-Molybdenum-Iron (UNS N08366 and UNS N08367) Plate, Sheet, and Strip
E 29-1993a (1999), Using Significant Digits in Test Data to Determine Conformance with Specifications

Publisher: The American Society for Testing and Materials (ASTM), 100 Barr Harbor Drive, West Conshohocken, PA 19428-2959

H4 ISO PUBLICATIONS[2]

ISO 9000–1:1994, Quality management and quality assurance standards — Part 1: Guidelines for selection and use

[2] ISO documents are available from The American National Standards Institute, Inc. (ANSI), 25 West 43rd Street, New York, New York 10036. Publications appearing above, which have been approved as American National Standards may also be obtained from ANSI.

Copyright ASME International
Provided by IHS under license with ASME
No reproduction or networking permitted without license from IHS
Not for Resale

ISO 9000–2:1997, Quality management and quality assurance standard — Part 2: Generic guidelines for the application of ISO 9001, ISO 9002m and ISO 9003

ISO 9000–3:1997, Quality management and quality assurance standards — Part 3: Guidelines for the application of ISO 9001 to the development, supply and maintenance of software

ISO 9000–4:1993, Quality management and quality assurance standards — Part 4: Guide to Dependability programme management

ISO 9002:1994, Quality system — Model for quality assurance in production and servicing

ISO 9003:1994, Quality systems — Model for quality assurance in final inspection and test

Publisher: International Organization for Standardization (ISO), 1 rue de Varembé, Case Postale 56, CH-1211 Genève 20, Switzerland/Suisse

H5 MSS PUBLICATIONS

MSS SP-6-2001, Finishes for Contact Faces of Pipe Flanges and Connecting-End Flanges of Valves and Fittings

MSS SP-9-2001, Spot Facing for Bronze, Iron and Steel Flanges

MSS SP-25-1998, Standard Marking System for Valves, Fittings, Flanges, and Unions

MSS SP-44-R2001, Steel Pipeline Flanges

MSS SP-45-1998, Bypass and Drain Connections

MSS SP-55-2001, Quality Standard for Steel Casting for Valves, Flanges and Fittings

MSS SP-61-1999, Pressure Testing of Steel Valves

Publisher: Manufacturers Standardization Society of the Valve & Fittings Industry (MSS), 127 Park Street, NE, Vienna, VA 22180-4602

Copyright ASME International
Provided by IHS under license with ASME
No reproduction or networking permitted without license from IHS
Not for Resale

ASME B16.5-2003 INTERPRETATIONS
Interpretation No. 4

Replies to Technical Inquiries
January 1, 1998 through December 31, 2002

FOREWORD

This publication includes all of the written replies issued between the indicated dates by the Secretary, speaking for the ASME B16 Committee, Standardization of Valves, Flanges, Fittings, Gaskets, and Valve Actuators, to inquiries concerning interpretations of technical aspects of B16.5, Pipe Flanges and Flanged Fittings NPS $\frac{1}{2}$ Through NPS 24 Metric/Inch Standard.

These replies are taken verbatim from the original letters except for a few typographical corrections and some minor editorial corrections made for the purpose of improved clarity. In some few instances, a review of the interpretation revealed a need for corrections of a technical nature; in these cases, a corrected interpretation follows immediately after the original reply.

These interpretations were prepared in accordance with the accredited ASME procedures. ASME procedures provide for reconsideration of these interpretations when or if additional information is available which the inquirer believes might affect the interpretation. Further, persons aggrieved by this interpretation may appeal to the cognizant ASME Committee or Subcommittee. ASME does not "approve," "certify," "rate," or "endorse" any item, construction, proprietary device, or activity.

Copyright ASME International
Provided by IHS under license with ASME
No reproduction or networking permitted without license from IHS
Not for Resale

Interpretation: 4-1

Subject: Hub Diameter

Date Issued: March 13, 1998

File: B16-97-011

Question: According to ASME B16.5-1996, does the diameter of hub dimension "X" as shown in Table 9, Fig. 9, correspond to the theoretical intersection of the angles line that represents the outside of the hub with the line that represents the back of the flange?

Reply: Yes. However, note this is a dimension without a tolerance.

Interpretation: 4-2

Subject: Tolerance

Date Issued: March 24, 1998

File: B16-98-003

Question: Does ASME B16.5-1996 have required tolerances for a lapped, slip-on, or socket-welding flange for the overall length through hub?

Reply: No.

Interpretation: 4-3

Subject: Blind Flange Material

Date Issued: March 24, 1998

File: B16-98-004

Question (1): May blind flanges covered by ASME B16.5-1996 be produced from plate?

Reply (1): Yes.

Question (2): May blind flanges produced from plate be marked in accordance with ASME B16.5-1996?

Reply (2): Yes, provided that they meet all the requirements of ASME B16.5-1996.

Question (3): Does ASME B16.5-1996 have criteria for the selection of materials?

Reply (3): No. See para. 5.1.1.

Copyright ASME International
Provided by IHS under license with ASME
No reproduction or networking permitted without license from IHS Not for Resale

Interpretation: 4-4

Subject: Implementation of the Standard, Flange Face Finish

Date Issued: July 21, 1998

File: B16-097-015

Question (1): Is there a mandatory date for the implementation of ASME B16.5-1996?

Reply (1): No. Implementation may be required by reference in a code, specification, sales contract, or public law.

Question (2): May a flange not meeting the flange facing finish requirements of ASME B16.5-1996 but meeting those of an earlier edition be supplied as being in accordance with the 1996 edition?

Reply (2): Yes, provided that the flange face finish is supplied by arrangement with the purchaser. (See para. 6.4.4.)

Question (3): According to ASME B16.5-1996, para. 6.4.4.3, may a flange with less than 45 grooves per inch or more than 55 grooves per inch meet the flange facing finish requirements as long as the resultant surface finish has a 125 to 250 μin. average roughness?

Reply (3): Yes.

Interpretation: 4-5

Subject: Welding Neck Flanges

Date Issued: June 18, 1999

File: B16-99-004

Question (1): Does ASME B16.5-1996 cover welding neck flanges that have the overall length through hub dimension y greater than the specified values (e.g., long weld neck)?

Reply (1): No.

Question (2): Does para. 6.7.4 of ASME B16.5-1996 allow the conformance designation "B16" to be applied to long weld neck flanges having overall length through hub dimensions greater than specified values?

Reply (2): No. This paragraph applies to only end preparations.

Interpretation: 4-6

Subject: Blind Flange Material

Date Issued: October 15, 2001

File: B16-98-013

Question (1): Does ASME B16.5-1996 allow blind flange made from a plate material listed in Table 1A to be designated as a forging material in Table lA?

Reply (1): No.

Question (2): Does ASME B16.5-1996 permit blind flanges to be of a plate material as listed in Table IA for all pressure classes covered in ASME B16.5-1996 (150, 300, 400, 600, 900, 1500, and 2500)?

Reply (2): Yes.

Copyright ASME International
Provided by IHS under license with ASME
No reproduction or networking permitted without license from IHS Not for Resale

Interpretation: 4-7

Subject: Materials Conformance

Date Issued: January 31, 2001

File: B16-98-017

Question: In accordance with ASME B16.5-1996, may a flange made from a material other than that of a material specification listed in Table lA be identified as being manufactured in accordance with ASME B16.5?

Reply: No.

Interpretation: 4-8

Subject: Material Conformance

Date Issued: January 31, 2001

File: B16-99-03

Question: May a flange meeting all of the relevant dimensional requirements of ASME B16.5-1996 that is integrally forged or cast to another product be marked as in para. 4.1.1 to indicate conformance to the B16.5 Standard?

Reply: No.

Interpretation: 4-9

Subject: Dual Markings

Date Issued: January 31, 2001

File: B16-99-12

Question: In accordance with ASME B16.5-1996, para. 4.14, may flanges NPS ½ through NPS 3½ meeting all of the requirements for Class 600 be marked to show conformance with both Class 400 and Class 600?

Reply: Yes.

Interpretation: 4-10

Subject: Welding End Preparation for Welding Neck Flanges

Date Issued: January 31, 2001

File: B16-99-14

Question: In ASME B16.5-1996, para. 6.7.1, the referenced figures are for attachment of flanges to pipe with wall thickness 0.19 in. and larger. May weld preparations for pipe wall thickness less than 0.19 in. be used in accordance with para. 6.7.4?

Reply: Yes.

Copyright ASME International
Provided by IHS under license with ASME
No reproduction or networking permitted without license from IHS Not for Resale

Interpretation: 4-11

Subject: Socket Weld Flanges

Date Issued: January 31, 2001

File: B16-00-03

Question (1): In ASME B16.5-1996, including 1998 Addenda **(a)**, various tables (for example Table 9) have illustrations that show the location of the applicable tabulated dimensions. For socket welding flanges, these illustrations note a limiting flange size range. Are socket-welding flanges in sizes outside this range, covered by ASME B16.5?

Reply (1): No.

Question (2): May socket welding flanges, in sizes greater than NPS 3 (NPS $2\frac{1}{2}$ for class 1500), which conform to the requirements of ASME B16.5-1996, including 1998 Addenda **(a)**, with all dimensions listed in the applicable tables met, be stamped "B16" in accordance with para. 4.14?

Reply (2): No. Socket welding flanges in these larger sizes are not included in the requirement of B16.5.

Interpretation: 4-12

Subject: Dimensional Requirements

Date Issued: January 31, 2001

File: B16-00-004

Question: In accordance with ASME B16.5-1996, including 1998 Addenda **(a)**, are there requirements for the geometry of the shoulder at the circumference defined by diameters designated R in Fig. 7?

Reply: No.

Interpretation: 4-13

Subject: Marking for Welding Neck Flanges

Date Issued: January 31, 2001

File: B16-00-12

Question: Does ASME B16.5-1996 require marking in addition to that described in para. 4 for socket welding or welding neck flanges?

Reply: No.

Interpretation: 4-14

Subject: Material Conformance

Date Issued: February 1, 2002

File: B16-C-01-01

Question: In accordance with ASME B16.5-1996 Edition, 1998 Addenda **(a)**, may flanges manufactured of materials other than those listed in Table 1A be marked as being in conformance with ASME B16.5 as required by para. 4.14?

Reply: No. See para. 5.1.

--`,,```,,,,````-`-`,,`,,`,`,,`---
Copyright ASME International
Provided by IHS under license with ASME
No reproduction or networking permitted without license from IHS Not for Resale

Interpretation: 4-15

Subject: Lapped Joint Flanges Thickness

Date Issued: February 1, 2002

File: B16-C-01-02

Question: What minimum thickness does ASME B16.5-1996, 1998 Addenda **(a)**, require for lapped joint flanges?

Reply: Dimension "C" as shown in Tables 9, 12, 15, 18, 21, 24, and 27. See para. 7.4 for tolerance.

Interpretation: 4-16

Subject: Marking Requirements

Date Issued: February 20, 2002

File: B16-C-01-03

Question (1): According to B16.5-1996, 1998 Addenda **(a)**, is it required that the designation "B16" or the designation "B16.5" be marked on the flange?

Reply (1): It is required that "B16" be marked on the flange. See para. 4.1.4.

Question (2): Does marking "B16.5" in lieu of "B16", as required, render the flange nonconforming to ASME B16.5-1996, 1998 Addenda **(a)**?

Reply (2): No.

Interpretation: 4-17

Subject: Flange Thickness

Date Issued: September 2, 2002

File: 02-02830

Question: According to ASME B16.5-1996 edition, 1998 Addenda **(a)**, is it acceptable for the flange thickness to taper to the edge and be thinner than the flange thickness "C" dimension listed in the dimensional tables?

Reply: No. See para. 7, Tolerances.

Copyright ASME International
Provided by IHS under license with ASME
No reproduction or networking permitted without license from IHS Not for Resale

ASME B16.5-2003

ISBN 0-7918-2948-0





M1503R

Copyright ASME International
Provided by IHS under license with ASME
No reproduction or networking permitted without license from IHS

Not for Resale